CENTRAL FLORIDA EXPRESSWAY AUTHORITY

Expressway Authority Standards for Preparation of Signing and Pavement Marking Plans

TOLL 408 | TOLL 414 | TOLL 417

TOLL 429 | TOLL 451 | TOLL 528

CENTRAL FLORIDA EXPRESSWAY AUTHORITY

Expressway Authority Standards for Preparation of Signing and Pavement Marking Plans

TOLL 408 TOLL 414 TOLL 417 TOLL 429 TOLL 451 TOLL 528

Central Florida Expressway Authority

Standards for Preparation of

Signing and Pavement Marking Plans

(October 2014)

Table of Contents

Appendices

Chapter 1

Introduction

Contents:

Section 1.1

Purpose

The Central Florida Expressway Authority (the Authority) considers signing and pavement marking to be an essential component of roadway construction plans. These elements are used by the Authority's customers to easily and safely find their desired destinations when using the Authority's toll roads.

The material contained herein is intended to guide Consultants in the design and preparation of Signing and Pavement Marking Plans for the Authority. It is the Consultant's responsibility to ensure plans are designed and prepared in accordance with these Standards and all other applicable standards and guidelines.

Section 1.2

Definitions

All Electronic Tolling (AET)

Cash toll collection is not provided on AET toll roads. The Authority collects AET tolls electronically through the Authority's E-PASS program or through bills sent by mail to non-E-PASS users. Mailed bills are determined using video captures of vehicle license plates as non-E-PASS user's drive under a toll gantry. The Wekiva Parkway will be the first AET facility in the Authority's system.

ClearView Highway Font (CV)

CV is a relatively new font for use on guide signs and is designed to improve legibility. CV is currently the Authority's standard font for use in guide sign design and fabrication.

Conceptual Details

The details included in the Appendix are considered conceptual in nature. It is ultimately the Consultant's responsibility to verify accuracy, revise as necessary to meet project specific needs and include in plans. The Consultant assumes full responsibility and ownership once the details are included in the Contract plans.

Conceptual Sign Plan (CSP)

The CSP contains proposed guide signs and structure locations required for a project based on preliminary geometry. The Consultant is fully responsible for making all necessary adjustments based on actual project geometry and roadway design constraints. The CSP does not include standard signing (regulatory, warning, route markers, etc) other than post interchange signing along the mainline. Typically the CSP is provided to the Consultant by the Authority or the Authority's GEC.

Construction Guide Signing Plan (CGSP)

The CGSP will be developed by the Consultant rather than provided by the Authority or the Authority's GEC. The CGSP will contain all proposed guide signing required during each phase of construction and will be included in the Traffic Control Plans for review and approval by the Authority.

Toll Gantry

Toll gantries are structures that span the mainline or ramp and serve as electronic toll collection points.

Open Road Toll Plaza (ORT)

An ORT plaza allows E-PASS customers to continue uninterrupted on the mainline while cash customers are diverted to a canopied toll plaza in each direction of travel. All of the Authority's mainline toll plazas are ORT design.

Route Confirmation Marker (RCM)

The RCM is the first assembly (in direction of travel) in post interchange signing. Its purpose is to provide the route number and cardinal direction of the mainline to drivers entering the facility, i.e. to reassure drivers that they are on the right road and travelling in the desired direction. RCM's are typically located 500 feet downstream from the end of the entrance ramp taper in accordance with MUTCD criteria.

Static Sign Panel

A sign in which the message is fixed and does not change. Panels are .125 inches thick aluminum sheet(s).

Section 1.3

Acronyms

ACM – Automatic Coin Machine

AET – All Electronic Tolling

APL – Arrow – per – Lane signs

APLM – Modified Arrow – per – Lane signs

CEI – Construction Engineering and Inspection

CGSP – Construction Guide Signing Plan

CMS – Changeable Message Sign

CSP – Conceptual Signing Plan

DMS – Dynamic Message Sign

EOR – Engineer of Record (Consultant)

GEC – General Engineering Consultant

ITS – Intelligent Transportation Systems

MB – Manned Booth

ORT – Open Road Tolling

PPRT – 3M Preformed Patterned Retroreflective Pavement Marking Tape

ROW – Right-of-Way

RPM – Retro-reflective Raised Pavement Marker

TCP – Traffic Control Plans

TSP – Technical Special Provision

UC / LC – Upper case / Lower case

VHB – 3M Very High Bond Acrylic Foam Tape

Chapter 2

Standards

The following Florida Department of Transportation (FDOT), American Association of State Highway and Transportation Offices (AASHTO) and Federal Highway Administration (FHWA) manuals are to be utilized in preparation of referenced plans. The Consultant shall utilize the most current edition, and any subsequent revisions and/or supplements (English), of each specified manual throughout the design process. Should any revision to the above manuals affect the project design, the Consultant shall provide written notification to the Authority and obtain direction prior to incorporating the revision.

1. FDOT Design Standards (FDOT Standard Index)
2. FDOT Plans Preparation Manual (PPM)
3. FDOT Structures Manual
4. FDOT Traffic Engineering Manual
5. AASHTO Green Book
6. FHWA Manual on Uniform Traffic Control Devices (MUTCD)
7. FDOT Basis of Estimates Manual (BOE)
8. FHWA Standard Highway Signs and Marking Book (SHSM)
9. AASHTO Standard Specifications for Structural Supports for Highway Signs, Luminaires and Traffic Signals
10. Applicable FDOT design memoranda and design bulletins
11. AASHTO Guidelines for the Selection of Supplemental Guide Signs for Traffic Generators Adjacent to Freeways
12. FDOT CADD Production Handbook
13. FDOT Bicycle Planning and Design Handbook
14. FDOT Roundabout Guide
15. Florida Administrative Code (FAC) Rule 14-51

Conceptual details and examples included with this document are intended to aid the Consultant in certain design issues specific to the Authority. In order to maintain systemwide consistency, applicable conceptual details are available for download in MicroStation format. **It is the Consultant's responsibility to review and revise the appropriate conceptual details to meet project specific needs and include in plans. The Consultant shall be fully responsible for information shown on these detail sheets and for review and approval of subsequent shop drawings.**

In cases where the Authority standards, as specified in this document, differ from either Federal or State Signing and Pavement Marking standards, the Authority Standards shall take precedent.

Chapter 3

General Criteria and Checklists

Contents:

Chapter 3.1

General Criteria

3.1.1 Signing and Pavement Marking Plans shall be submitted at the 60%, 90%, 100%, Final and Pre-Bid design document development phases and shall be in English units of measurement. Each submittal shall address any previous review comments. A written response to all review comments is required to be provided to the Authority within two (2) weeks of the receipt of the review comments.

The Authority, at its discretion, may choose to omit one or more of the above referenced submittals depending on the schedule or complexity of the project.

3.1.2 Roll plots

- A roll plot showing preliminary pavement markings as well as major guide sign locations shall be submitted at the 30% design document development phase.

- A roll plot shall be provided showing all proposed signing and pavement markings at the 60% and 90% levels.

- At the Authority's discretion, a roll plot may be required at the 100%, Final and/or Pre-Bid phase submittals.

- When a project warrants a CGSP, roll plots of the proposed CGSP shall be submitted at the 90% and 100% level of plans development. Additional submittals may be required at the discretion of the Authority. See Section 4.7 for CGSP roll plot requirements.

3.1.3 In addition to 30% through 100% submittals of signing and pavement marking plans, the Consultant shall provide written documentation, when applicable, of the following:

- Verification at the 60% level that a field review of the proposed sign locations has occurred and that appropriate sight distance will be provided at all installations.

- Coordination with applicable school safety personnel (required, see Section 6.1.25).

- Conflicts with existing and/or proposed light poles, drainage structures, utilities, etc., have been identified and proposed action noted at the 60% submittal.

- Design related and/or economic constraints that prevent placement of overhead sign supports to accommodate ultimate geometry when applicable. In such cases, alternative support locations require approval by the Authority at the 60% submittal.

- Verification whether governing agencies (other than FDOT) for roadways contained in the plans, which are not within the Authority's jurisdiction, have established their own signing and pavement marking criteria. If the governing agency has its own criteria, a copy shall be provided to the Authority with the 60% plans submittal.

- Verification at the 90% submittal that existing sign structures or existing bridges can accommodate proposed signing.

Structural design should not begin until overhead sign locations and associated sign panels have been approved.

Soil borings should not be taken for overhead sign structures until locations have been approved.

3.1.4 The Consultant shall submit a written recommendation addressing all traffic signal related signing including but not limited to street name signs (internally illuminated or static), turn prohibition including u-turns, etc. Signal related signing shall include proposed overhead panels (span wire, mast arm, pole, etc.) as well as single post ground mounted assemblies. The written recommendation shall be included with the 60% plans submittal.

3.1.5 Two sets of the Final submittal structural calculations for overhead sign assemblies (span, cantilever, bridge) along with multi-post calculations for ground mounted signs shall be signed and sealed by a Professional Engineer licensed in the state of Florida. One set is to be labeled "For Submittal to FDOT" and delivered to FDOT, District 5. The second set is to be part of the Final plans submittal to the Authority.

3.1.6 The geometry (baseline, stationing, curve data, etc) in milling and resurfacing plans shall match that of the original roadway construction plans and/or any revisions as a result of major roadway improvements, i.e. widening, adding/removing ramps, etc. It is the Consultant's responsibility to request said plans from the Authority prior to beginning milling and resurfacing plans development.

3.1.7 The Authority has developed Technical Special Provisions (TSP) relative to signing and pavement markings. The Consultant shall include applicable signing and marking TSPs with the TSPs for all plan disciplines, i.e. roadway, drainage, ITS, signals, etc.

Chapter 3.2

Submittal Checklists

The level of design required in each submittal plans set shall conform to standard FDOT requirements with the exception that cross sections and structural designs are not required in the 60% plans. The following checklists are provided as an aid to the Consultants in verifying that each phase submittal meets minimum requirements.

3.2.1 60% plans shall include the following:

- Key Sheet with preliminary Index of Sheets. Only number sheets included in submittal.
- Tabulation sheets with pay item numbers. Quantities not required.
- Preliminary General notes.
- Preliminary Pay Item notes.
- Project layout (when applicable).
- Plan view sheets containing:
    - Geometric information common to roadway construction plans and signing/pavement marking plans, i.e., station ties for begin/end pavement tapers, station equations, begin/end baseline stations, etc.
    - Proposed and/or existing (to remain) walls with labels identifying type.
    - Proposed and/or existing (to remain) guardrail.
    - Key map when applicable.
    - All existing signing with proposed disposition.
    - Proposed guide signing with structure number, sign number and station location.
    - Proposed standard signing with national code, size and station location.

- Proposed pavement markings, including RPMs, with lane widths, labels/callouts and key station ties.
- Proposed delineators with labels, spacing and station to station limits of application for applicable spacing (40’ OC or 300’ OC).
- Preliminary roadway lighting symbols, including existing to remain.

- Guide sign worksheets with all panels fully designed, including ultimate or future when known.
- Written recommendation for all signal related signing.
- Signing and Pavement Marking roll plot

3.2.2 90% plans shall include the following:

- 60% comments incorporated.
- Completed Key sheet.
- Completed Tabulation sheets.
- Completed General notes.
- Completed Pay Item notes.
- Completed plan view sheets with:
  - Signing pay item numbers.
  - All station ties for pavement markings and any additional information necessary for installation.
  - Final roadway lighting symbols.
- Completed guide sign worksheets for permanent panels.
- Preliminary construction guide sign worksheets when applicable.
- Guide sign cross-sections.
- Special details required for project.

- Preliminary sign structure designs, calculations and drawings.
- Preliminary column painting detail(s).
- Sign structure borings and Geotechnical Report.
- Signing and Pavement Marking roll plot.
- Preliminary construction guide signing roll plots when applicable.

3.2.3 100% plans shall include the following:

- 90% comments incorporated.
- All plan sheets finalized.
- All sign structure designs and drawings finalized.
- Finalized column painting detail(s).
- Finalized construction guide signing roll plots when applicable.

3.2.4 **Submittals may be rejected in their entirety based on one or more of the following:**

- All minimum submittal requirements are not satisfied.
- All minimum scale values, as specified throughout this document, are not satisfied (i.e., 1"= 50' intersection detail on 11" x 17" sheet).
- Font size does not meet desired criteria.
- Multiple errors indicate Authority Standards have not been applied to design.

Note that guide sign worksheets for temporary signs for use during construction shall be included in the Traffic Control Plans and are not to be part of the Signing and Pavement Marking Plans. All signs that are part of the completed construction project shall be shown in the Signing and Pavement Marking plans.

Chapter 4

Guide Signing

Contents:

Section 4.1

Introduction

Typically a Conceptual Guide Sign Plan (CSP), prepared by the Authority's General Engineering Consultant (GEC), will be provided to the Consultant. Approximate sign placement and sign copy, as shown on the plan, will have been prepared in accordance with basic requirements of the MUTCD and consistent with the Authority's preferences.

At the discretion of the Authority, a CSP may not be prepared or provided to the Consultant. In such cases, the Consultant is fully responsible for developing the Signing and Pavement Marking Plans in accordance the Authority's Standards.

It will be the Consultant's responsibility to review the CSP and prepare detailed plans according to the specified manuals as well as criteria specific to the Authority contained within this document.

It is important that the Consultant understand the CSP will have been created using **conceptual roadway geometrics**. It is the Consultant's responsibility to complete revisions necessary to accommodate the **actual roadway geometry** and related elements of design.

Section 4.2

General Criteria

The criteria contained in this section apply to both overhead and multi-post guide signs.

4.2.1 Close coordination between roadway lighting and guide sign locations shall be required.

- Unless constrained by other roadway design elements, **signs shall be placed in advance of the nearest light pole** in order to provide optimum visibility (as viewed in the direction facing the sign).
- The above criteria may be more flexible when both conditions below are met. Flexibility is contingent on Authority approval on a per case basis.
  - The horizontal offset is the same for the light pole and overhead sign structure upright, i.e. behind guardrail or wall.
  - Lighting and sign structure are in a tangent section of roadway and at different horizontal offsets, i.e. no guardrail or wall.
- Multi-post assemblies shall be placed in advance of the nearest light pole when both are behind guardrail or wall. No flexibility allowed.
- If the preferred criterion cannot be met, signs may be placed equidistant between consecutive light poles.

4.2.2 Close coordination between the Signing and Pavement Marking and ITS designers shall be required to ensure static guide sign and DMS structure locations do not conflict. A minimum of 800’ shall be maintained between all overhead and ground mounted static guide signs and DMS structures.

4.2.3 Final locations of guide signs near the project limits shall be coordinated with the Consultant(s) for adjacent projects, if applicable. This coordination will be necessary to ensure:

- Correct placement of supplemental guide signing.
- Correct distance calculations for advanced guide signing.
- Adequate spacing between guide signing and standard signing.

4.2.4 Due to the timing of adjacent contracts, it will be the responsibility of the Consultants to develop and coordinate interim signing and pavement marking plans when needed. Installing and covering permanent overhead or ground mounted sign panels shall not be allowed without the approval of the Authority prior to installation.

4.2.5 On existing facilities, some panels, which do not otherwise require adjustment, may need to be overlaid in order to meet current Authority standards for sign sheeting material and letter style (ClearView) or to meet Federal reflectivity requirements. Decisions to overlay or replace existing panels will be made on a case-by-case basis by the Authority based on recommendations from the Consultant.

4.2.6 Use of arrows and "EXIT ONLY" messages:

- Shall conform to actual laneage.
- Are only considered appropriate for multi-lane exits when both exiting lanes are fully developed.
- May be used on the one (1) mile sign at system to system interchanges if all exiting lanes are fully developed. Prior Authority approval is required.

On multi-lane exits with or without an option lane, the Authority will determine the best location to begin EXIT ONLY signing for surface street interchanges (typically the 1/2 MILE or 1/4 MILE structure).

4.2.7 Care shall be taken during design to assure that sign cross sections position overhead panels over the lane(s) to which they apply. This may at times require design adjustment(s) to the panel layouts in the worksheets.

4.2.8 Regardless of classification, the optional lane of a multi-lane exit **shall never** be indicated by a black arrow on yellow background. No exceptions allowed.

4.2.9 Signing for Multi-Lane Exits with an Optional Lane

- System to system interchanges

The Authority uses arrow-per-lane (APL) signs at system to system (i.e. freeway to freeway) interchanges. APL signs are typically shown on the project or corridor CSP. However, the Authority may determine APL's are required during project development.

The Authority does not use APLs at intermediate interchanges unless the Authority identifies (or the Consultant recommends) an individual location as needing special treatment.

APL signs are designed per MUTCD criteria with the exceptions specific to the Authority. See Section 4.6 and the example provided in the Appendix.

- All other multi-lane exits

  - Regardless of classification, all other interchanges shall be signed using either the Authority developed modified arrow – per – lane (APLM) design or traditional methodology when necessary. See Section 4.6 and the example provided in the Appendix.

  - APLM signing shall be used in all new roadway construction projects and all existing roadway improvement projects that require replacement of the advance and exit direction sign structures.

  - When existing advance and exit direction structures are to remain in place, the Consultant shall conduct structural analyses to determine if each structure can safely accommodate an APLM panel. See Section 4.5 for additional information regarding analyzing an existing structure.

  - Do not mix APLM and traditional signing in a single approach to an exit if both exiting lanes are fully developed at all advance guide sign locations.

  - The Authority must approve using APLM for one approach and traditional signing in the opposite approach to the same interchange.

  - If the traditional methodology must be used, the optional lane is to be designated using a white arrow against a green background while the exit only lane (trapped lane) is to be designated by a black arrow **within** the yellow background.

4.2.10 Multi-Lane Exits without an Optional Lane

The Authority does not concur with MUTCD Section 2E.24 that requires EXIT ONLY messaging on all advance guide signs for lane drops at exits that do not have an optional exit lane. See 4.2.6.

4.2.11 Lane Specific Signs

See Section 4.6 for criteria related to placement of lane specific arrows.

Panels containing NEXT RIGHT or NEXT LEFT are considered lane specific signs and shall be centered over the applicable lane.

4.2.12 Non-lane specific signs (1 mile, ½ mile, interchange sequence, etc.)

Span or bridge mounted panels shall be centered over the entire width of the roadway facing the sign.

Cantilever mounted panels shall be centered over the entire width of the roadway facing the sign to provide optimum visibility. The Authority does not adhere to the FDOT limitation of fifty (50) feet for overall cantilever length.

The above criterion for cantilevers shall be used unless prohibited by other roadway design or R/W constraints. The following alternative positions may be used. **However, the Consultant shall provide written justification to the Authority for approval prior to including either Option 1 or Option 2 in the plans.**

- Option 1: Right edge of the panel aligned with the outside edge of travel (in direction facing sign).

- Option 2: Left edge of the panel aligned with the skip stripe for the outside lane (in direction facing sign).

4.2.13 The placement of sign panels and the design of structures shall accommodate future panels, as necessary. The Consultant shall coordinate with the Authority regarding the accommodation of future signing needs.

4.2.14 In the event the project design provides improvements that are the interim configuration of an ultimate roadway expansion, overhead sign structures should be located (along baseline) as follows:

- Span structures

  - Can be used in the interim as well as the ultimate roadway configuration, i.e. relocation will not be required when the ultimate roadway is constructed.

- Cantilever structures

  - Can be used in the interim as well as the ultimate roadway configuration or

  - Designed to accommodate future relocation.

Any condition that will result in the removal, modification and/or relocation of an ”interim” overhead structure with "ultimate" construction shall be documented for the project file and approved by the Authority at the 60% submittal.

4.2.15 If an ultimate overhead sign structure will be impacted by interim construction (walls, embankment, etc.), the Consultant for the interim improvement project shall make accommodations for the ultimate structure. This may require construction of the ultimate foundation (or other elements) with the interim project. Any ultimate sign structure elements that are to be constructed in the interim improvement project are to be shown in the CGSP. See Section 4.7

4.2.16 Exit direction signs shall be:

- Mounted overhead. No exceptions.
- Located at the theoretical gore (as defined by gore striping) unless other roadway features (i.e., drainage structure, roadway lighting, etc.) require an adjustment to the preferred location. Adjustments greater than 20’ require approval from the Authority or the Authority’s GEC. This criterion applies to:
  - APLM sign structures.
  - Single lane exit structures.
  - Multi-lane exits signed using the traditional method.

APL exit direction structures shall be positioned in accordance with the MUTCD, i.e. “in the immediate vicinity of the point where the exiting lanes begin to diverge from the through lanes…” See MUTCD Section 2E.21. APL panels shall be the only exit direction structures located at the point of divergence.

4.2.17 Advance guide signs shall:

- Be mounted overhead.
- Meet all required sight distance criteria.

Two advance assemblies (minimum) are required in each approach to an interchange unless directed otherwise by the Authority.

Multi-post assemblies are not allowed without prior approval from the Authority. No exceptions.

Major deviations from the CSP not related to geometric revisions shall be documented for the project file and approved by the Authority prior to the 60% submittal.

4.2.18 Mainline Lane Drop Signing (not at exit ramps)

The Authority prefers overhead signing when dropping a mainline lane at locations other than exit ramps. The Consultant shall work closely with the roadway designer to ensure the geometry will accommodate a minimum of two (2) overhead structures, typically cantilevers. Three (3) overhead structures should be used when possible. Structures shall maintain a minimum of 800’ from the nearest upstream and downstream overhead guide signs.

The following criteria relates to structures in the direction of travel.

- The first and second panels shall read LEFT/RIGHT LANE ENDS XXX FEET.
- The third panel shall read LANE ENDS MERGE LEFT/RIGHT, with upward slanting arrow.
- If space allows for only 2 overhead structures, the first panel shall read LEFT/RIGHT LANE ENDS XXX FEET; the second shall read LANE ENDS MERGE LEFT/RIGHT, with upward slanting arrow.
- In the 2 structure scenario, the first structure (in the direction of travel) shall be located a minimum of 800’ feet from the beginning of the taper. In the 3 structure scenario, the first structure shall be located a minimum of 800’ from the nearest overhead guide sign.
- The last structure (in the direction of travel) is to be positioned at or near the beginning of the taper.
- All structures shall be located a minimum of 800’ apart. Minimum spacing should be increased when geometry allows.

Improvements to an existing roadway may not provide for more than one structure. In such cases, the overhead panel shall be installed at the best location allowed by existing conditions and supplemented with standard post mounted warning signs.

Coordination between signing and roadway designers is required.

4.2.19 Mileage calculation

- Interchange guide signing
  - The exit direction sign is the control. Mileage on advance guide signs shall be the distance to the exit direction assembly. This criterion will apply to APL signing under most geometric conditions. However, the Consultant may adjust the control point if the distance between the APL exit direction structure and the theoretical gore is unusually long. The Consultant must obtain Authority approval of control point adjustment prior to 60% submittal.
  - When guide signing overlaps between contracts, the Consultant whose project contains the interchange shall be responsible for providing the control information to the adjacent Consultant(s).
  - When signing spans multiple projects, **all** engineering firms are responsible for coordination to ensure logical mileage progression.
- Distance signing to cities
  - The Consultant whose project either contains or is closest to the signed City shall be responsible for determining the location of the established “control point” and informing adjacent Consultants.
  - In the absence of an established “control point” the responsible Consultant may use the mileage on the nearest off-site distance sign as the control.

Distance signs shall only be installed at the direction of the Authority or if included in the CSP.

4.2.20 Mileage Display

- Multi-lane exits with or without an option lane
  - Mileage is included on the 1 MILE and 2 MILE panels regardless of sign type, i.e. APL, APLM or traditional unless directed otherwise by the Authority.
  - When an auxiliary lane is a dropped lane between successive entrance and exit ramps and the distance between these ramps is less than 1

mile, mileage is displayed on the first advance guide sign downstream from the entrance ramp.

- Single lane exits
  - Include mileage on panels measuring 1/2 MILE or greater from the exit direction assembly.
  - Panels less than 1/2 MILE from the exit direction assembly are to read NEXT RIGHT

4.2.21 Destination signs shall:

- Be installed at the direction of the Authority or in accordance with the CSP.
- Match the format of the example provided in the Appendix.

4.2.22 Crossroad directional signing at exit ramp terminals

Named crossroads shall:

- Contain the road name, cardinal directions (North / South or East / West) and the route designation when applicable.
- Match the format provided in the Appendix.

Standard dual route marker assemblies shall be used in the absence of a road name for all numbered routes.

4.2.23 Crossroad guide signing

- Shall be mounted overhead when possible.
- Is typically mounted on bridges and cantilevers and shown on the CSP.

The Authority prefers to locate cantilevers within the limited access ROW. If preferred location is not possible, the Consultant shall present alternatives to the Authority for discussion and approval prior to proceeding with panel design.

- Ground mounted assemblies
  - May be used if overhead structures are prohibited by right-of-way, utilities or other roadway design constraints.

- Require Authority approval prior to including in plans.

The Authority prefers to use a post mounted **Advance** Entrance Direction diagrammatic sign when possible in lieu of a post mounted guide sign with a "SECOND RIGHT" or "SECOND LEFT" action message. See MUTCD Section 2D.45 and Figure 2D-16.

4.2.24 Crossroad street name signs for roadways not interchanging with the Authority's facility shall be provided. Locations for these signs shall be as follows:

- Crossroad over toll road: Mount panels on the bridge girder for view by toll road traffic.

- Toll road over crossroad: Install multi-post assemblies in the median behind bridge approach guardrail depending on existing or proposed landscaping. If median installation is prevented by landscaping or other design related elements, install the multi-post assembly along the outside travel lane. Roadside mounted assemblies shall be located close to the bridge.

4.2.25 If practical and economical, multiple guide signs for both directions of travel should be placed on the same overhead structure.

4.2.26 The main panels on overhead structures are to be designed with an overall height sufficient to completely cover the structural cross member as viewed in the direction of travel. The overall height shall also be sufficient to completely cover the hanger extensions necessary for installation (3" top and bottom, 6" total), i.e., no portion of the cross member or hangers shall be visible above or below the main panel. See Section 4.6 for additional information regarding overall height.

4.2.27 Where possible, multi-post and overhead sign supports should be placed behind existing guardrail or proposed guardrail when guardrail is warranted for other roadside conditions. The Consultant is responsible for determining the proper length of advancement for guardrail in accordance with Index 400 for all situations. Details, if necessary, for extension of existing guardrail are the responsibility of the Consultant.

4.2.28 Existing structures (to remain) that do not meet current clear zone criteria are to be noted by memorandum prior to 60% submittal. Decisions to adjust or replace these structures will be made on a case-by-case basis by the Authority. The Consultant shall provide recommendations.

4.2.29 Median supports

- New overhead structures with median supports shall not be permitted unless indicated in the CSP or approved by the Authority.

- When allowed, an upright shall be located in the center of the median unless directed otherwise by the Authority.

- The upright shall be protected from both directions of travel even when one direction meets clear zone requirements. To satisfy this criterion, Consultants should:

  - Consider the feasibility of relocating the sign assembly behind existing or proposed guardrail or barrier wall (i.e. guardrail or barrier wall proposed in the roadway construction plans for other purposes such as bridges, steep front slopes, etc.).

  - Extend existing or proposed guardrail or barrier wall when necessary. Extremely long extensions require Authority approval prior to including in plans.

  - The EOR shall obtain Authority approval prior to proposing guardrail installation for the sole purpose of protecting a median upright.

4.2.30 Supplemental Guide Signs shall display NEXT RIGHT/LEFT as the action message. An exit number panel shall be attached to the main sign.

4.2.31 <u>Overhead Support Column Painting</u>

All support columns for overhead sign assemblies shall be painted when the project reaches substantial completion. Therefore, Consultants shall ensure their plans take the following into consideration.

- Painting shall include proposed as well as existing to remain or to be relocated support columns.

- Project signing typically extends beyond the limits of roadway construction and shall therefore be used to determine the limits of support column painting.

- Include applicable General and Pay Item notes provided in the Appendix.

The Consultants shall revise the Appendix detail entitled “Sign Upright Painting” as necessary for specific project and include in plans.

4.2.32 SR 408 Aesthetic Requirements

An aesthetic treatment shall be specified for all ground mounted signs (single and multi-post) along the SR 408 mainline, ramps and crossroads within the Authority’s jurisdiction. Limits of application and criteria are:

- Aesthetic criteria will only apply from the interchanges of Kirkman Road to Goldenrod Road.
- Posts and attachment hardware (including bolts) painted black, semi-gloss “Thermoset powder paint finish”, Federal color 27038 by component fabricator.
- Back of panels painted black by sign fabricator with process and color matching posts.
- Back of panel decal to be white letters on either a clear or black background.

The Consultant is responsible for ensuring applicable General Notes are included in plans. Shop drawings shall be carefully checked for compliance.

4.2.33 Toll Shield Requirements

The Authority uses two (2) toll shield designs detailed in the Appendix as TM and TM2.

In shield TM the word TOLL is in white letters on a green background. TM shall be used within overhead and ground mounted guide signing as well as route markers along the mainline and ramps within the Authority’s jurisdiction.

In shield TM2 the word TOLL is in black letters on a yellow background. TM2 shall be used within overhead and ground mounted guide signing along interchanging crossroads. TM2 shall also be used in route marker assemblies on interchanging crossroads as well as trailblazer assemblies on facilities leading to the interchanging crossroad.

Section 4.3

Horizontal and Vertical Clearance

4.3.1 Horizontal Clearance (CZ) – General

- The term "controlling element" as it relates to the clear zone (CZ) is defined as **one** of the following for each upright: near edge of travel, face of guardrail, face of barrier wall or face of barrier type curb.

- The CZ for all sign assemblies shall be measured from the **single** controlling element as determined by the roadway configuration and design criteria. Therefore the CZ shall be measured from **one** of the following as appropriate:

  - Near edge of travel.

  - Guardrail (standard post spacing) in accordance with latest FDOT Design Standard for guardrail.

  - No less than 4' from face of barrier curb. Note that curb has no redirection capabilities except at very low speeds. The Consultant should increase CZ from face of curb whenever possible and practical.

  - Face of traffic railings in accordance with FDOT PPM Figure 7.1.2.1.

- The CZ for overhead sign structures shall:

  - Conform to Design Standard 700 and Volume I of the FDOT Plans Preparation Manual.

  - Be measured from the controlling element of the roadway to the front of the support when the structure is located on the front slope, i.e. the front of the foundation is 3" minimum above ground.

  - Be measured from the controlling element of the roadway to the front of the foundation when the above ground measurement exceeds 3". This can occur when the structure is located on the back slope, i.e. the back of foundation is set at 3" minimum.

- The CZ for single and multi-post sign assemblies shall:

- Conform to Design Standard 17302 with the exception of Case VI. If guardrail is present, the clear zone shall be from the face of the guardrail to edge of sign panel in accordance with the latest FDOT criteria. Note that Case V is for use in Business or Residential areas only.

- Be measured from the controlling element of the roadway to the near edge of the panel.

- The minimum preferred CZ for use on all ramps is 18' when the controlling element is the edge of travel. If Design Standard 700 or Volume I of the FDOT Plans Preparation Manual specify a lower minimum value, the Consultant shall use 18' unless constrained by other design elements. Proposed deviations from the minimum preferred CZ must be approved by the Authority prior to 60% submittal.

4.3.2 The horizontal clearances for overhead and multi-post sign assemblies located behind barrier walls, sound walls or retaining walls shall be sufficient to avoid footing conflicts. Coordination with structural engineer shall be required.

4.3.3 When existing overhead signs are to remain within the limits of proposed roadway widening, it shall be the Consultant's responsibility to verify horizontal clearance(s) to the front of supports meet minimum standards and shall notify the Authority of deficiencies. If necessary and with Authority approval, modifications may be required, i.e., extending existing guardrail, modifying post spacing within guardrail, etc. Coordination will be required with the roadway engineer. <u>Verified CZ dimension(s) to the front of support(s) shall be shown in plans.</u>

4.3.4 Vertical and horizontal clearances for truss supports shall accommodate ultimate geometry when applicable.

4.3.5 Sign assemblies along crossroads with barrier curb and sidewalks should be located behind the sidewalks whenever possible. Various factors will influence the location (ROW, utilities, fencing, etc.) however in all cases, sign assemblies shall meet the most current applicable ADA sidewalk clearance requirements.

4.3.6 <u>Vertical Clearance (VC) – General:</u>

- Overhead static signs

- The minimum VC shall be 17'-6" to the bottom of the luminaire for initial or future known panels, whichever is lowest with the panels centered on the truss.

- If proposed signs are not to have lighting at the time of construction, the VC shall be to the bottom of a future luminaire to allow maximum flexibility.

- Dynamic Message Signs (DMS)

  - The minimum VC for a multi-line DMS shall be 19'-6" or in accordance with the most current FDOT criteria.

  - The 19'-6" VC for a multi-line DMS shall be measured to the bottom of the DMS or the lowest element on the DMS structure.

  - The minimum VC for single line DMS / static panel combinations used in toll plaza approach signing shall be 19'-6" or in accordance with the most current FDOT criteria.

  - The VC shall be measured to the bottom of the DMS box rather than the luminaires for DMS/static panel combinations.

- The VC for multi-post ground mount signs shall be measured from the near edge of the travel lane to the bottom of the panel.

4.3.7 Vertical Clearance for Span Structures

The VC for all full span trusses along the mainline and ramps shall be measured from the:

- Highest point of the entire roadway width including shoulders (i.e., northbound **and** southbound)

- Highest point of **future widening** (i.e., northbound **and** southbound).

Only one vertical clearance shall be shown for each full span sign structure. The Consultant shall not include a VC for each panel and shall not provide a VC in each direction of travel.

4.3.8 Vertical Clearance for Cantilevers

The VC for all cantilevers along the mainline and ramps shall be measured from the highest point of the roadway, including shoulders, facing the sign (i.e., northbound **or** southbound).

- If typical section(s) indicate future widening to the **inside and/or outside**, the vertical and horizontal clearances shall be set such that the cantilever will not require relocation when the ultimate roadway is constructed

4.3.9 Signing on Existing Overhead Structures

The Consultant shall be responsible for ensuring that the minimum vertical clearance is maintained when any of the following activities occur:

- Proposed panel(s) installation.
- Existing panel(s) shift.
- Proposed luminaire(s) installation.

A survey is required by a Florida Registered Land Surveyor for all above referenced activities regardless of existing structure location relative to the limits of roadway construction.

See Section 12.1 for cross section requirements.

4.3.10 Vertical Clearance for Ground Mounted Assemblies

When single and multi-post assemblies are mounted to the back of or behind high walls (sound, MSE, etc.) the VC shall be increased such that the entire panel is clearly visible above the wall to allow adequate time for the driver to take the appropriate action. The suggested methodology shown in the Appendix may be utilized to determine the vertical distance needed from the top of the wall to bottom of the panel along roadway segments having a constant grade. It will be the Consultant's responsibility to adjust this distance in areas where vertical curves will impact sign visibility.

The VC criteria in Design Standard 17302 shall apply in all instances where high walls are not a factor.

Section 4.4

Overhead Guide Sign Lighting

4.4.1 All overhead guide signs including bridge mounted panels shall be lighted unless directed otherwise by the Authority or the Authority's GEC. Exceptions must be justified by the Consultant and approved by the Authority.

4.4.2 LED sign lighting is preferred by the Authority for new sign installations. The Consultant shall review the adjacent existing sign lighting to assure continuity of sign lighting. The Consultant shall provide recommendations, and obtain Authority approval, for the type of sign lighting to be used for all projects.

4.4.3 LED sign lighting shall include a remote driver as shown in the Appendix.

4.4.4 The Consultant is responsible for coordinating electrical service to new installations and for any luminaire adjustments required when existing structures are used.

4.4.5 If proposed overhead sign structures, including bridge-mounted panels, are more than 1/2 mile from a power source, the Consultant shall propose alternative methods of achieving a lighted structure. Alternative methods shall not be included in the plans without prior approval from the Authority.

4.4.6 Appropriate conduits and cabling shall be provided to serve future signs, including bridge mounted panels, when future signs are located within the limits of the project electrical service.

4.4.7 <u>Top Mounted Luminaires</u>

Luminaires shall not be mounted to the top of sign panels within the Authority's jurisdiction. **No exceptions** allowed unless governed by Federal Aviation Authority (FAA) regulations near airport facilities. Coordination with the FAA is the Consultant's responsibility as well as filing any FAA required permits or documentation.

If the overall panel size results in calculations that indicate the need for top mounted luminaires, the need should be mitigated through one or more of the following:

- Vary the arm length to accommodate the need for longer throw.
- Change the tilt to accommodate the larger signs.

- Calculate the “Exit Number Plaque” component separately to eliminate skew in calculations for the main sign.

- Provide additional luminaires at the bottom of the sign to attain the required light levels.

- Utilize the Narrow or Wide distribution luminaires as necessary to provide sufficient light levels for the larger sign sizes.

4.4.8 The Consultant shall **field verify** all sources of existing power for illuminated signs. "As-Built" or "Record" drawings may be used for reference only.

4.4.9 The voltage drop calculations for design of lighted signs shall be based on the "worst case" scenario.

4.4.10 Lighting plans shall address repair/adjustment/replacement of existing sign luminaires as necessary.

4.4.11 Signs will be illuminated with Authority approved luminaires. The number of luminaires at each lighted sign will depend on the lighting calculations and will vary based on the height and width of each panel. See FDOT Design Standard 17505 for spacing and mounting details.

4.4.12 Illumination for each sign shall be 15-35 foot candles average initial with an average-to-minimum uniformity ratio of 3:1 or less and a maximum-to-minimum uniformity ratio of 6:1 or less depending on the Ambient Luminance (see Table 4.4.1).

4.4.13 Luminaires shall be gray or silver. No exceptions shall be allowed.

4.4.14 The Consultant shall determine if luminaires require shielding to prevent glare into neighboring residential areas. Shielding shall be included in plans when required.

4.4.15 All pull boxes shall be surrounded by concrete slabs in accordance with Design Standard 17500.

Table 4.4.1 Sign Lighting		
Ambient Luminance*	Illumination Level Average Initial (H.F.C.)	Uniformity Ratios Max / Min
Low	15.0 to 20.0	6:1
Medium & High	25.0 to 35.0	6:1

* Ambient luminance classifications are defined in Section 10.3 of the AASHTO Roadway Lighting Design Guide (2005). Refer to the Traffic Plans Guide.

Section 4.5

Structural Design

Overhead and multi-post sign structures are to be designed in accordance with AASHTO and FDOT design standards. Structural design should not begin until overhead sign locations and associated sign panels have been set and approved by the Authority where applicable. The items contained in this section are to be applied in addition to the conventional standards.

4.5.1 The Consultant shall provide verification that existing bridges and sign structures can safely accommodate proposed signs and lighting. Documentation shall be included with the 90% plans submittal.

4.5.2 Tri-chord Designs

- Tri-chords **shall be used for all structures** unless special conditions dictate the need for a box truss.
- All designs (span and cantilever) shall:
  - Utilize single tubular uprights.
  - Include a note reading “Alternative designs shall not be allowed” in the Cantilever and Span Sign Structure Notes.
- If a design variation is required, the Consultant shall submit a request in writing to the Authority for approval prior to the 90% submittal.
- The tri-chord design requirement and associated notes apply to multi-line (walk-in) and single line DMS structures when DMS is facing only one direction of travel.

4.5.3 Box Truss Designs

- Box truss designs shall only be allowed within the Authority’s jurisdiction under the following special conditions:
  - Toll plaza related static/single line DMS combination panels facing both directions of travel are co-located on the same structure.
  - Multi-line DMS (walk-in) boxes facing both directions of travel (initial or future) are co-located on the same structure.

- As directed by the Authority at specific locations.

- All designs:
  - Shall utilize a single tubular upright at each end.
  - May be generated by the Consultant or the Contractor as determined by the Authority.

- If the Contractor is to generate box truss design(s), the Consultant's plans shall clearly provide, but may not be limited to, the following:
  - Layout and configuration requirements.
  - Soil parameters.
  - Report of core borings.
  - Design requirements including the Authority's over design criteria for future needs.
  - Submittal requirements including signed and sealed design(s) calculations and drawings to the EOR and to the Authority's GEC for review.

- If a design variation is required, the Consultant shall submit a request in writing to the Authority for approval prior to the 90% submittal.

4.5.4 Double column uprights with cross bracing for each support shall not be allowed for either tri-chord or box truss designs within the Authority's jurisdiction.

4.5.5 <u>Multi-post sign assemblies</u>

- Column size and estimated average length calculations are required for all multi-post sign assemblies (guide signs, trailblazers, etc.) and are the responsibility of the Consultant. The most current version of the FDOT Multi-Post Sign Program shall be used and a hard copy of the output shall be included in project calculations documentation.

- Column size and estimated average length shall be shown in the plans for each assembly. This information may be shown in a tabular format. See example in Appendix.

4.5.6 Crossroad Street Name and Authority Logo Panels

Crossroad street name signs shall be mounted flush to traffic railing barrier on roadway bridges crossing over the mainline. The Authority logo signs shall be mounted flush to the traffic railing on mainline bridges crossing over surface roadways.

The attachment method for both shall be:

- Determined by the Consultant and specified in the plans by General Note(s) or Pay Item Note(s), or
- Designed by the Contractor.

Plans shall include the applicable Appendix detail with the General Notes adjusted and table filled out as necessary for specific project. Structural engineer shall coordinate revisions with signing and pavement marking engineer.

Plans shall specify that Contractor designed attachments and hardware shall be submitted to the EOR and the Authority's GEC for approval prior to implementation.

4.5.7 All overhead sign structures shall be designed such that the main panels, initial and known future, are center justified (vertically centered) on the horizontal member of either the full span truss or the cantilever.

Auxiliary or "detachable" panels (exit number, "Hospital", "All Traffic", "No Reentry", etc.) are not to be included in the overall height of the main panel for center justification.

When using an existing structure for proposed panel(s), center justification may not be applicable due to various constraints such as maintaining required VC. The Consultant shall review existing structures on a per case basis.

4.5.8 Sign structures used in more than one project phase with multiple panel configurations shall be designed:

- To accommodate the "worst case" configuration scenario.
- In accordance with the latest edition of the FDOT Structures Manual and PPM.

- To accommodate initial and future truss length adjustments.

The Consultant shall clearly identify on the sign structure cross section what panel sizes the structure must ultimately accommodate as well as the panels required at initial and/or interim installations. Multiple cross sections for the same structure are preferred for clarity of phased panel configurations and truss length adjustments.

Cantilever arms shall be designed and detailed in plans such that future arm lengths are accommodated by adding or removing a portion of the arm. Additions or removals of arm sections shall not impact the integrity of the structure.

The EOR is fully responsible for ensuring the shop drawings submitted by the structure manufacturer include the capability of future truss length adjustment(s) when required in design.

4.5.9 Where existing structures identified for removal can be utilized within the same contract at another location, the Consultant shall evaluate each structure for potential re-use and submit recommendations to the Authority for approval.

4.5.10 Spread footings or drilled shafts shall be considered for all sign structures based on location constraints. Consultant shall evaluate the most appropriate type of foundation for each location.

4.5.11 Drilled shaft lengths must be adjusted for embankment slopes steeper than 4:1, as determined by the Geotechnical Engineer. The use of wings should be avoided if torsional resistance can be obtained through the use of larger diameter shafts. The maximum shaft diameter should not exceed 6'-0". The factor of safety for torsion may be 1.0.

4.5.12 <u>New Sign Structures</u>

Whenever new structures are added to the system, a Basic Wind Speed of 110 MPH for Lake County and 130 MPH for Orange, Osceola, and Seminole County shall be used in the design. The structures shall be designed in accordance with the latest FDOT Structures Manual and the following Authority specific requirements:

- Determine truss depth, initial member sizes and vertical clearances based on initial and known future sign panels center justified on the truss. Update all members and foundation designs as necessary based on this truss configuration plus an increase in sign panel depth of twenty (20) percent to accommodate future modifications. Bottom justify the twenty

(20) percent increase to maintain vertical clearance established by initial or known future panels.

Note: The overdesign criteria do not apply to multi-line DMS structures. However on full span structures, when a multi-line DMS is installed over only one direction of travel, a static panel with exit plaque shall be shown on the cross section centered over the opposite direction of travel to provide maximum flexibility for future use. See cross section example in the Appendix.

- When a span truss is to be initially installed with panel(s) over only one direction of travel, truss design shall include a future panel with exit number plaque over the opposite roadway to provide maximum future flexibility. See the Appendix.

- Span type structures shall meet the above criteria or the FDOT Structures Manual criteria for urban areas, whichever provides the larger capacity.

- Cantilever upright height shall be determined based on the "worst case" scenario when multiple panel configurations are required. Cantilever arm length may vary when multiple configurations are required however; the overall structural design shall be based on the "worst case". See 4.5.8.

- Initial cantilever installation shall include initial panel(s) with associated arm length. Initial panel shall be positioned to match the end of the cantilever arm for aesthetics.

- **The cantilever arm (initial and future) shall at no time extend beyond the associated panel(s) without prior Authority approval.** The EOR is fully responsible for clearly identifying this requirement in plans and checking shop drawings for compliance.

- Drilled shaft or pedestal shall extend a minimum three (3) inches above the ground line or the design high water line. Foundations **shall not** extend twenty four (24) inches above ground without documented justification submitted to and approved by the Authority.

- A three (3) inch grout pad shall be utilized for all overhead sign structures maintained by the Authority. The Consultant shall review the detail sheet provided in Appendix, revise as necessary and incorporate into the Contract plans.

- The number of anchor bolts used for each base shall be a multiple of 4 for double symmetry, or the direction of traffic shall be specified for each individual anchor bolt configuration.

- If vertical support sizes or anchor numbers and sizes differ within the same structure from one side to the other (span type), the larger size shall be utilized on both sides. If necessary, the structure shall be reanalyzed.

- The maximum upright diameter allowed is 36 inches. If larger than 36 inch diameter is required by calculations, alternate configurations should be evaluated. Uprights with a diameter exceeding 36 inches must be approved by the Authority.

- In order to reduce the possibility of local buckling of these large diameter columns, the diameter versus thickness ratio shall be limited to sixty or less (API RP 2A-LRFD, Section D.2.2.2).

- Mainline toll plaza approach structures containing a single line DMS/static panel combination with an adjacent static panel shall be designed such that all static signs are mounted on the same vertical plane (flush) with the front of the DMS box.

4.5.13 Existing Sign Structures

Sign panels, sizes, and/or locations may be modified on existing overhead sign structures that were designed according to AASHTO Standard Specifications for Structural Supports for Highway Signs, Luminaires and Traffic Signals (1994) and the Authority/FDOT's overdesign criteria in effect at time of original design.

- Existing structures may be utilized subject to:

  - Meeting the AASHTO (1994) requirements with the new panel configuration.

  - Analysis under the AASHTO 1994 specifications and the current AASHTO specifications to determine the magnitude of overstress under the current code. The comparison and EOR's recommendations shall be submitted to the Authority's GEC for review.

  - Authority approval based on the overstress comparison, the EOR's recommendation and the Authority's GEC review results.

- Existing structures recommended for re-use shall be in good condition per the latest inspection records and site observation. The Authority will review and approve based on the merits of each case.

- It is the Consultant's responsibility to request the approved shop drawings for existing sign structures.

- When possible existing mainline toll plaza approach structures containing a single line DMS/static panel combination with an adjacent static panel are to be adjusted such that all static signs are mounted on the same vertical plane with the front of the DMS box.

4.5.14 All special mounting designs, including single post assemblies, are the responsibility of the Consultant and shall be detailed in the plans.

4.5.15 Structural designs, including bridge-mounted assemblies, shall be included in the Signing and Pavement Marking Plans.

4.5.16 Sign structures supporting single direction multi-line (walk-in) or single line DMS panels shall be designed such that the DMS is installed on the front vertical plane of the truss tri-chord. The Consultant shall verify the design dead load weight for each type of DMS with the Authority's GEC prior to beginning designs.

4.5.17 The cross sections showing DMS signs shall have a note indicating the weight and eccentricity of the DMS used in structural design.

4.5.18 Consultant must coordinate the location of the DMS vertical supports and the truss diagonal locations with DMS manufacturer. The connection between truss and DMS must be such as to allow for easy installation.

Section 4.6

Panel Design

4.6.1 ClearView Highway Font (CV)

Guide sign panel designs shall adhere to the criteria contained in the latest editions of the MUTCD, the Standard Highway Signs and Marking Book (SHSM) and the FHWA Interim Approval for Use of ClearView Font for Positive Contrast Legends of Guide Signs. Further clarifications of the material in these publications as well as additional requirements specific to the Authority's preferences are listed in this section.

The Authority has adopted **ClearView Highway Font (CV)** as its standard for guide signs when designing all new panels or full overlays containing positive contrast copy. Until such time as FHWA approves ClearView for negative contrast copy, the **Traditional Series (EM, E, etc.)** shall be used in design. The ClearView equivalents of the Traditional Letter Series can be found in the Interim Approval on the FHWA MUTCD web site.

By definition, positive contrast copy means light letters on a dark background, i.e. white or yellow letters on green, blue or brown backgrounds. Negative contrast copy means dark letters on a light background, i.e. black or purple letters on yellow or white backgrounds.

Guide sign panel designs shall adhere to the Authority criteria specified in Section 4.6. Lower case letters in ClearView may vary slightly depending on the design method, therefore, only the upper case letter height will be specified in most Authority criteria as well as in the panel designs included in the Appendix. It is the Consultant's responsibility to adhere to case sensitivity in accordance with the MUTCD.

The Consultant may be required to design entire panels or overlays using the Traditional Series with associated criteria as directed by the Authority, the Authority's GEC or notes on the CSP.

4.6.2 Computerized Designs

Guide signs shall not be designed using a computerized program, CADD or otherwise, unless the program ACCURATELY conforms to criteria in the SHSM or the ClearView Interim Approval. "TRANSOFT GuidSIGN" is the only software currently approved by the Authority. Examples of the preferred format for guide sign worksheets are included in the Appendix. However, the Consultant may use an alternative program or format provided examples

have been submitted and approved prior to 60% plans submittal. The Consultant shall not submit worksheets that radically deviate from the preferred format regardless of program.

4.6.3 Copy in upper case / lower case (UC/LC) combination shall conform to CV5W and positive contrast copy in all upper case (UC) shall conform to CV4W as found in the Interim Approval.

4.6.4 CV5WR is to be used only when necessary to fit a proposed overlay onto an existing panel or as directed by the Authority or the Authority's GEC.

4.6.5 Except as noted in this section for specific conditions, Traditional Series and ClearView shall not be used on the same panel for white copy on green background (positive contrast).

4.6.6 Panels shall be designed using the FHWA Bounding Box method as described in the Interim Approval or the SHSM as appropriate.

4.6.7 All guide signs, regardless of overall panel height, shall be designed using 3M Diamond Grade Cubed (DG3) Reflective Sheeting or the Authority's approved equal. As shown in the Appendix, the Consultant shall indicate DG3 as the Sheeting designation on each panel design.

4.6.8 It is the Consultant's responsibility to request available existing panel shop drawings for use in the design of full or partial overlays. If the existing panel shop drawing is not available, the Consultant is fully responsible for determining the actual panel size.

4.6.9 When new panels or full overlays are to be installed adjacent to an existing panel to remain, the Authority, the Authority's GEC or notes on the CSP will direct Consultants to do one of the following:

- Design the proposed panel or overlay as well as replace or overlay the existing panel to remain using the most current criteria.

- Design the proposed panel or overlay to match copy style and sheeting (if available) of the existing panel to remain.

4.6.10 <u>General Copy Size – mainline and ramps</u>

CV standard upper case heights will match the MUTCD table but the lower case heights may not. Do not adjust the lower case letters to match the MUTCD.

Copy sizes shall be per MUTCD, Section 2.E; Tables 2E-4 and 2E-5 with the following exceptions:

- Mainline Advance and Exit Direction guide signs:
  - “Overhead” category of copy sizes (MUTCD Table 2E-4) applies to signing along the mainline regardless of interchange classification.
  - 16” CV5W shall be the largest size used for “Name of Place, Street or Highway” regardless of interchange classification.
  - 20” CV5W shall only be used with prior approval from the Authority.
- Interchange Sequence (overhead) and Distance/Destination (ground mounted):
  - 13.3” CV5W shall be used for the “Place Name” or “Word”.
  - 13.3” CV4W whole numbers and 10” numerals within fractions shall be used for mileage distances.
- Supplemental Guide Signs:
  - 13.3” CV5W shall be used for the “Place Name”.
  - 10” UC CV4W shall be used for action message.
- Overhead signing on ramps:
  - Overhead size criteria shall be used unless design constraints necessitate downsizing the copy.
  - 13.3” CV5W is the smallest allowable size for “destination”.
  - Reduction is **subject to approval by the Authority** prior to panel and structure design.

4.6.11 General Copy Size – Crossroads

- “Overhead” category of copy sizes (MUTCD Table 2E-4) applies to signing along crossroads.

- Panels mounted to overcrossing bridges shall also be designed using the "Overhead" category of copy sizes. However, if the resulting panel is very large, downsizing may be considered subject to Authority approval.

- If downsizing the copy is necessary, the smallest allowable size for an overhead "destination" will be 13.3" CV5W.

- If a bridge mounted sign must be designed using 13.3" CV5W, overhead panels along the same crossroad in both directions of travel may be similarly designed for consistency. However, Authority approval is required.

- **All copy size reductions require Authority approval prior to panel or structure design.**

4.6.12 Overall Panel Height

- Overall Height as referenced within this document shall NOT include auxiliary panels such as "ALL TRAFFIC", "EXPRESSWAY ENDS", "NO REENTRY." etc. when these panels are to be removed in the future.

- Overall Height shall NOT include permanent exit number, hospital (D9-2 or D9-13a) or airport (I-5) plaques.

- The NO CASH auxiliary panel on cross road approach guide signs to the Authority's AET system shall be included in the overall height unless otherwise directed by the Authority. **It is the Consultant's responsibility to confirm with the Authority if this criterion applies to the Consultant's project prior to development of sign structure cross sections.**

Multiple panels on an overhead structure shall be designed having the same overall height under the following conditions:

- Panels face the same direction of travel.

- After using standard design criteria, the difference in panel heights is 24 inches or less.

4.6.13 The overall panel width shall be equal to or greater than the overall height unless otherwise directed by the Authority or the Authority's GEC.

4.6.14 Arrow – per – Lane signs

In general APL panels are to be designed per the MUTCD criteria in Table 2E-5 and Section 2E.21. Exceptions specific to Authority facilities are as follows:

- The largest allowable copy size for “destination” shall be 16” CV5W.
- Displaying two destinations per movement is acceptable. Destinations will typically be shown on the CSP.
- The overall length of the yellow background around the words EXIT and ONLY shall be determined based on copy requirements. Sixty (60) inches shall not be used for both unless appropriate. The Authority’s criterion for negative contrast copy applies.
- If black on yellow LEFT is used to supplement the exit number plaque either internally or as a separate panel, the Authority’s criterion for negative contrast copy applies.
- Arrow symbols for exit movements shall be upward slanting arrows rather than curve arrows as indicated in the MUTCD. Forty-five (45) degrees is preferred. See the example provided in the Appendix.

4.6.15 Modified Arrow – per – Lane signs

APLM panels are similar to APL signs in that:

- The largest allowable copy size for “destination” shall be 16” CV5W.
- The overall length of the yellow background around the words EXIT and ONLY shall be determined based on copy requirements. Sixty (60) inches shall not be used for both unless appropriate. The Authority’s criterion for negative contrast copy applies.
- If black on yellow LEFT is used to supplement the exit number plaque either internally or as a separate panel, the Authority’s criterion for negative contrast copy applies.

Authority criteria specific to APLM designs are as follows:

- Only the optional lane and EXIT ONLY lane arrows are to be shown. These arrows are similar to, but smaller than, APL arrows.

- Through movement arrows are not included for every lane in the direction of travel.

- The cardinal direction and the route shield are provided for the through movement with the cardinal direction positioned above and centered about the shield. Destinations are not provided.

- A maximum of two destinations (excluding route shield and cardinal direction when applicable) are provided for the exiting movement.

- The blue and white CASH TOLL .XX, when applicable, is to extend from the right edge of the panel (in direction facing sign) to the vertical separator between the through movement shield and the exit information.

See examples of APLM panel designs in the Appendix.

4.6.16 Diagrammatic signs shall:

- Be used only as directed by the Authority or as shown on CSP.

- Shall adhere to design criteria in the MUTCD and SHSM with the exception of lane line widths and arrow head sizes as directed by the Authority's GEC.

4.6.17 A worksheet detail shall be included in plans for all full and partial guide sign overlays.

4.6.18 Partial overlay designs shall:

- Completely cover all existing copy to be revised by the overlay.

- Not cover any portion of existing copy or border which is to remain visible.

- Match positive contrast copy style, i.e. ClearView or Traditional, which is to remain visible when overlay is positive contrast.

- Provide sufficient information such that the Contractor can correctly align the proposed copy (not the overall overlay) with the existing copy which is to remain visible.

4.6.19 Copy lengths, margins and vertical spacing

- All dimensions shall be shown to the nearest tenth of an inch.

- Word lengths shall be shown as the total for each word (preferred) or as individual letter widths plus applicable bounding box margins.

- The individual space between each whole element in a line of copy shall be shown, i.e. space between words, space between word and arrow, space between route shield and word, etc.

- Top, bottom and side margins shall be shown individually.

DESIGNS SUBMITTED IN COORDINATES OR WITH CUMULATIVE HORIZONTAL SPACING SHALL BE REJECTED WITHOUT REVIEW. A resubmittal will be required with designs in compliance with the above criteria.

4.6.20 Crossroad directional signs (multi-post on exit ramps).

- Street name shall be 8” CV5W.

- The first letter of cardinal directions shall be 8” CV4W and the remaining letters shall be 6” CV4W.

- Arrows shall be 12” x 8”.

- Border shall be 2”.

See the example in the Appendix

4.6.21 Crossroad street name signs (roadways not interchanging with Authority’s facility) serve as orientation aides to motorists as well as emergency response services. Crossroad street name signs shall be designed using:

- White copy and border on green background.

- 8” CV5W for the street name.

- 24” total panel height.

- 1” border width.

- 3” corner radius.

- 8” Interword spacing.

See the example in the Appendix.

The street name shall be one line of copy unless unusual design constraints require a shorter overall panel length. In those cases and with prior Authority approval, the panel may be designed with the street name on two separate lines and an overall height of 36 inches.

Crossroad street name signs are to be mounted either in the median (in advance of landscaping) or along the roadside. The Consultant must verify and match location of existing crossroad street name signing in both directions of the corridor outside of project limits unless directed otherwise by the Authority, the Authority's GEC or as shown on the CSP.

4.6.22 Street name signs at ramp / crossroad intersections shall contain the toll route shield. If design constraints dictate otherwise, the Consultant shall notify the Authority prior to submitting panel designs. This criterion applies to static and internally illuminated street name signs on mast arm as well as post mounted.

4.6.23 Destination signs on ramps shall be designed using:

- 8" minimum / 10" maximum CV5W for the destination.
- 8" x 12" arrow with 8"CV5W.
- 10" x 16" arrow with 10" CV5W.
- A horizontal separator between each destination.
    - Width and color to match sign border.
    - Separator to extend full width of panel.

It will no longer be necessary to horizontally offset the destinations and arrows to clearly associate the destination with the correct arrow. The horizontal separator will accomplish the desired results. See the example in the Appendix.

4.6.24 Abbreviations approved for use are:

- Ave (Avenue)
- Blvd (Boulevard)
- Comm (Community)

- Expwy (Expressway)
- Int'l (restricted to signing for Orlando International Airport)
- Rd (Road)
- St (Street)
- Tr (Trail)

Additional abbreviations may become necessary to reduce overall panel width. Additional acceptable abbreviations are in MUTCD Table 1A-1. All non-standard abbreviations shall be approved by the Authority prior to panel design.

4.6.25 Multiple background colors

All panels having more than one color of background sheeting shall have a horizontal and/or vertical divisional line separating the adjacent colors. The divisional line shall:

- Equal the width of the panel border color.
- Match the color of the border around the secondary background, i.e., if a panel contains black EXIT ONLY copy on yellow background, the divisional line is black.

4.6.26 Exit Number plaques:

- The overall width of each plaque shall be determined by the copy length and margin requirements. Minimum sizes as shown in MUTCD Table 2E-1 shall not apply within the Authority's jurisdiction.
- The suffix letter, when necessary, shall be separated from the exit number by one half (1/2) of the suffix letter height.
- The border width shall match that of the main panel to which it is attached.
- The corner radii shall be 4".

4.6.27 Action message word(s) shall be:

- Upper case 12"CV4W on overhead signs along the mainline and cross streets when destination is 16" CV5W.

- Upper case 10”CV4W if the destination has been reduced to 13.3” CV5W.

4.6.28 Negative contrast copy shall be designed as follows:

- Use Traditional Series **EM**
- Increase Inter-letter spacing by 10%
- Use 1.5 times the letter height for Inter-word spacing
- Use 12” UC letters for EXIT ONLY

Variations of “NO REENTRY”, “LAST EXIT BEFORE”, etc. shall be in UC 10.67” letters.

Variations of “EXPRESSWAY ENDS” may be in either UC 12” or UC 10.67” letters depending on overall panel width and/or if copy is a permanent part of the overall panel.

Overhead variations of “LANE ENDS” and “MERGE” messages shall be designed using 15” UC EM letters unless design constraints dictate the need for smaller letters. The minimum allowable size is 12” UC EM with Authority approval prior to panel design(s).

4.6.29 CASH TOLL .XX copy on overhead guide signs along the mainline shall be white 12"CV4W on blue background.

4.6.30 All advance and exit direction guide signs for tolled ramps shall be designed with the EPASS Logo EP-7 plaque mounted to the top of the main panel and twelve (12) inches to the left of the exit number plaque (in direction facing sign). Mounting shall be in accordance with Index 13417. **The EPASS logo shall no longer be positioned within the interior of the main panel.**

4.6.31 Cardinal Directions:

The space between a route shield and a cardinal direction word shall be equal to the height of the first letter of the cardinal direction.

When a line of copy contains a route shield and cardinal direction, the top of the first letter of the cardinal direction shall be vertically aligned with the top of the route shield.

When overhead or ground mount destination copy size has been reduced to 13.3”CV5W, the cardinal direction shall be 12”/10”CV4W letters. The first letter shall be 12" and the remaining letters shall be 10".

4.6.32 The Airport Symbol:

Within the interior of the main panel:

- Shall be composed of a 30" x 30" **green** airplane centered within a 34" x 34" white background when used in conjunction with a destination in16” CV5W.

- May be composed of a 26” x 26” **green** airplane centered within a 30” x 30” white background when used in conjunction with a destination in 13.3” CV5W.

- Shall not have a border regardless of size.

These sizes may only be adjusted with the approval of the Authority prior to panel design.

The white background shall have square corners, i.e., no corner radii.

The space between the airport symbol and the adjacent word shall equal the UC letter height of the word.

The white background shall be used in determining the overall panel size and shall be shown in the vertical and horizontal dimensions on the worksheet detail.

Route marker assemblies (single and multi-post):

- Standard format I-5 sign panel or as directed by the Authority or the Authority’s GEC.

4.6.33 Interword spacing (the horizontal space between words) shall be:

- **1.25** times the UC letter height (rounded to the nearest tenth of an inch) when the destination contains two words, i.e. Goldenrod Rd, Hiawassee Rd, Dallas Blvd, etc. *Note: This does not apply to crossroad street name signs.*

- **1.0** times the UC letter height when the destination contains three or more words, i.e. Orlando Int'l Airport, Winter Garden Vineland Rd, John Young Pkwy, etc.

- When two and three word destinations are on the same panel, use 1.0 times the UC letter height for all lines of destination copy.

- Adjustment(s) to interword spacing is not allowed without prior approval from the Authority or the Authority's GEC.

4.6.34 Interline spacing (the vertical space between lines of copy):

- Should be 0.75 times the average of the UC letter heights in the adjacent lines of copy. For example, using 16" UC in one line and 12" UC in the adjacent line, the interline space would be 10.5" or (0.75*(16+12)/2)).

- May be slightly adjusted to achieve a total panel height in an even 6" increment.

4.6.35 Margins ("Edge Spacing" in the MUTCD):

- Side margins should equal the upper case letter height **PLUS** the border. For example, using 16" upper case and 2" border, the ideal side margin would be 18".

- Top and bottom margins should equal the average letter height of the adjacent line of copy **PLUS** the border. For example, using an UC/LC combination of 16" / 13" CV5W and a 2" border, the ideal margin would be 16.5".

- All margins can be slightly adjusted if necessary to achieve panel dimensions in even 6" increments. However the designer should use caution when decreasing the bottom margin to minimize interference by the luminaires.

4.6.36 Arrows:

- Arrow Location

  - All lane specific arrows, regardless of panel type (APL, APLM, traditional), shall be positioned over the center one third (1/3) of their applicable lanes. In APL or APLM panels the optional lane arrow shall be centered over the applicable lane.

- Black arrows (down and slanted) shall be positioned between the words EXIT ONLY (unless geometry dictates otherwise) within the yellow portion of signs for any lane drops when APL or APLM signs are not used.

- White slanted arrows on exit direction panels shall be positioned on the far right side (facing sign) when the panel does not contain EXIT ONLY messaging.

- APL and APLM Arrows

Through arrows and all arrowheads in APL designs adhere to criteria in the MUTCD Table 2E-5.

Through arrows in APLM designs have a height of 42 inches and shaft width of 4 inches. The arrowheads are reduced accordingly.

The Authority prefers to use a 45 degree slanted arrow for the EXIT ONLY lane as well as the in the optional lane through/exit arrow. See details in the Appendix for these Authority specific designs.

- Traditional Slanted Arrows

The appropriate size (tip to tail and barb to barb) shall be relative to the UC letter height of the destination copy as specified in the SHSM.

When the SHSM specifies the arrow length as a range of dimensions, i.e. 25-35 inches, the longest possible length shall be used in design.

The horizontal and vertical dimensions used when sizing the panel shall be the dimensions of the square or rectangular “area” required for the arrow. The actual size, i.e. length (tip to tale) and width (barb to barb) is different from the spacing dimensions and shall be noted on the Guide Sign Worksheet detail. For example, using a 45 degree arrow in conjunction with 16” CV5W copy, both the horizontal and vertical dimensions used in the panel layout will be 27.5”. However, the actual length of the arrow is 35” and the width is 22.25”.

- Traditional Down Arrows

The size shall be 32 inches in width and 22 inches in height as shown in the SHSM on all overhead panels regardless of destination copy size. No exceptions will be allowed without prior approval from the Authority.

- Space between arrow and adjacent word

- Overhead: shall be 1.5 times the UC letter height. This criterion may be reduced to a minimum equal to the UC letter height when necessary due to design constraints and with prior approval from the Authority or the Authority's GEC.

- Ground mounted: shall be equal to the UC letter height (minimum)

- All special design arrows shall be fully detailed in the Guide Sign Worksheets for correct fabrication. An enlarged arrow for detail data (separate from the sign graphic) is recommended for clarity. See examples in the Apendix.

4.6.37 Fractions:

The numerals are generally 10"CV4W. However, exceptions are occasionally made with the approval of the Authority prior to panel design.

- Fraction width:

  - When a fraction contains the numeral one (1/4, 1/2):

    CV4W: 2 times the numeral height, i.e., 10" numerals equal 20" fraction width.

    CV5W: 2.2 times the numeral height, i.e., 10" numerals equal 22" fraction width.

  - Fractions without the numeral one (3/4):

    CV4W and CV5W: 2.2 times the numeral height.

- Fraction height:

Per Section 2A.13 of the MUTCD, "The overall height of the fraction shall be determined by the height of the numerals within the fraction and shall be 1.5 times the height of an individual numeral within the fraction."

- Horizontal spacing:

  Between a whole number and a fraction: **0.50** times the height of the whole number.

Between a fraction or whole number and adjacent word: **1.25** times the UC letter height of the word.

Bounding box margins for the whole number and first or last letter of adjacent word are not included in design.

4.6.38 Interchange Sequence and Distance / Destination signs:

The Authority requires the mileage numerals and fractions to be vertically centered about the widest numeral and the widest fraction in each vertical "column". Manual adjustments are typically required to computerized designs. For example, for a sign reading:

Destination X	1 ½
Destination Y	2 ¾

Assume the distance 2 ¾ has a greater total copy width than 1 ½ and will therefore be the control. Use the following steps to determine horizontal spacing:

Step 1: Use the Authority's standard horizontal spacing for the 2 ¾
Step 2: Center the ½ over the ¾ fraction
Step 3: Center the numeral 1 over the numeral 2

This method will result in:

- A greater than normal space between the 1 and the ½.
- Different side margins adjacent to each fraction.

Fractions shall be vertically centered about the adjacent whole number or the upper case letter of the destination in the absence of a whole number.

4.6.39 Interstate, U.S. and State route shields:

- Interchange guide signs
  - Interstate and U.S. shield size shall match MUTCD Table 2E-4.
  - State shield size shall match the greater of either MUTCD Table 2E-4 or FDOT Design Standard 17355.
- Interchange Sequence signs

All shield sizes shall be reduced from the "overhead" standard criteria to the next smallest size shown in the SHSM. For example, a 36" x 36" two-digit U.S. route shield would be reduced to 24" x 24".

4.6.40 Toll route shields shall be:

- 48" x 60" on overhead signs along the mainline and on Interchanging Interstate or Toll Roads.
- 36" x 48" on other crossroad overhead approach signing.
- 24” x 30” on interchange sequence signs.
- The word “TOLL” shall:
  - Remain in FHWA traditional highway font.
  - Be white letters on a green background when used on any signs along the Authority’s mainline and ramps. See shield TM detail in the Appendix.
  - Be black letters on a yellow background when used on surface street signing (independent route markers or imbedded in guide signs). See shield TM2 detail in the Appendix.

Plans must clearly specify which toll shield, i.e. TM or TM2 is to be used on each guide sign panel design in worksheets and each route marker assembly on plan view sheets.

4.6.41 County route shields:

County shields shall be centered within a yellow background when displayed within a guide sign.

The yellow background shall be used in determining the overall panel size and shall be shown in the vertical and horizontal spacing on the worksheet detail.

When used on an advance and exit direction guide sign, the size shall be in accordance with Index 17355.

When used in conjunction with 13.3 CV5W, i.e. interchange sequence (overhead), distance / destination (ground mounted), the size of shield and yellow background shall be:

- For two (2) and three (3) digit route numbers, 31” x 30” shield on a 34” x 33” background.

- For four (4) digit route numbers, 37 3/4” x 36” shield on a 41” x 40” background.

On guide signs designed using 8” or 10” CV5W the size of shield and yellow background shall be:

- For two (2) and three (3) digit route numbers, 24 7/8” x 24” shield on a 26” x 25” background.

- For four (4) digit route numbers, 31” x 30” shield on a 32” x 31” background.

When used on a ground mounted sign designed using copy smaller than 8” CV5W, the size shall be appropriate with respect to the destination copy.

4.6.42 The word “TO”:

Size and series shall be relative to other elements within the guide sign. The first letter of “TO” shall be top justified with the route shield, with or without a cardinal direction.

General criteria for use in conjunction with:

- A destination in upper / lower case letters: “To” shall be in upper / lower case letters matching the destination copy size. For example, a line of copy reading “To Orlando Int’l Airport” where Orlando Int’l Airport is in 16"/13"CV5W, the word “To” shall be in 16"/13”CV5W.

- A route shield and cardinal direction:

  - The series shall match the cardinal direction.

  - The size shall match the smaller letters. For example, a line of copy reading “TO / route shield / EAST” where EAST is in 15"/12"CV4W, the word “TO” shall be 12"CV4W.

  - The space between “TO” and a route shield shall match the space between the shield and cardinal direction.

- A route shield (no cardinal direction):

- 12"CV4W minimum when destinations are 16” or 13.3” CV5W.
- 8” CV4W when destinations are 10.67” CV5W.
- 6” CV4W when destinations are 8” CV5W.

4.6.43 Periods shall:

- Not be used after common abbreviations such as Rd, St, Blvd, Pkwy, EXPWY, etc.
- Be used in toll rates.

Periods may be used for special conditions with approval by the Authority prior to panel design.

Diameter as well as the space between the adjacent letter and/or number shall be determined using the standard ClearView Bounding Box values.

4.6.44 Diagonals (forward slash):

When the CSP indicates a diagonal is required in the copy, i.e. Tampa / Daytona Beach, the spacing shall adhere to the following:

- Height and width shall be determined by standard Bounding Box values based on size of destination copy.
- Horizontal space from diagonal to adjacent letters shall be 0.50 times the upper case letter height, rounded to the nearest tenth of an inch. Bounding Box margins for adjacent letters shall not be included in design. *Note: this criterion will not match the spacing produced by the GuidSIGN program. Manual editing will be required.*

4.6.45 Apostrophes:

When used, apostrophes shall be horizontally spaced using standard ClearView Bounding Box values based on the size of copy.

4.6.46 Hyphens:

The Consultant is fully responsible for verifying if a destination or street name is hyphenated with the governing agency. Hyphens shall not be used otherwise. The Consultant is not relieved of this responsibility based on what is or is not shown on the CSP.

The length shall be 1.5 times the Bounding Box value based on copy size.

- Example: using “A - B”, the total space between the adjacent letters or numerals shall be the sum of: the RT margin for “A” + the LT and RT hyphen margins + 1.5 times the normal hyphen length + the LT margin for “B”. *Note that this criterion will not match the spacing produced by the GuidSIGN program. Manual editing will be required.*

  - “A – B” in 15” CV4W:

Right margin for A	=	1.050	
Left margin for hyphen	=	2.550	
Hyphen length (5.25 x 1.5)	=	7.875	
Right margin for hyphen	=	2.550	
Left margin for B	=	2.700	
Total space between A and B	=	16.725	(round to 16.7)

- These criteria may be slightly adjusted if necessary with the approval of the Authority.

- These criteria do not apply to toll plaza related signs.

Section 4.7

Construction Guide Signing Plan

4.7.1 When a system to system or complicated interchange will be partially open to traffic during construction, the Consultant shall provide a fully developed construction guide signing plan (CGSP) for each phase of construction. A CGSP may be required for other interchanges on a per project basis as directed by the Authority. The CGSP shall be included in the Traffic Control Plans (TCP) portion of the Roadway Construction Plans (not the Signing and Pavement Marking Plans component).

4.7.2 The CGSP shall be coordinated with the Consultant(s) for adjacent projects, if applicable, to ensure sufficient and consistent guidance is provided through all construction zones.

4.7.3 Overhead guide signing is preferred. Proposed span and cantilever structures should be installed in their permanent locations as early in the construction process as feasible. The Consultant shall make every effort to utilize existing as well as proposed structures for temporary guide signing.

4.7.4 The Consultant is fully responsible for conducting structural analyses to determine if proposed and existing sign structures can safely accommodate proposed temporary panels. If necessary to enable use of the structure, and with Authority approval, sign copy may be down sized to reduce the overall panel size.

4.7.5 Temporary panels, including overlays of existing guide signs, must be fully designed and detailed in the plans.

4.7.6 Permanent panels shall not be installed with temporary full or partial overlays without prior approval from the Authority.

4.7.7 It is acceptable for a proposed sign structure to be installed without signage.

4.7.8 Ground mounted advance and/or exit direction guide signs may be allowed, with prior Authority approval, when:

- Installation of the proposed or relocation of an existing structure is geometrically constrained or is not financially feasible.
- Utilization of an existing structure in place is not appropriate.

4.7.9 The CGSP shall clearly identify the construction phase in which:

- A proposed structure is required for temporary and/or permanent signing.
- An existing structure is needed for temporary signing.
- An existing structure could be relocated for temporary use (Authority approval required prior to including in plans).
- A temporary ground mount guide sign is to be installed.
- Relevant VMS are to be used and proposed text.

4.7.10 Regulatory, warning and ground mounted supplemental guide signing need not be shown (crossroad street name signs, distance signs, etc) unless requested by the Authority or deemed useful by the Consultant.

4.7.11 Notes reading as follows shall be added to the TCP General Notes:

- "The Contractor may make minor modifications to the Construction Guide Signing Plan with CEI and EOR approval. Significant revisions require Authority approval."
- "The Contractor shall maintain temporary overhead panels until such time as they are removed or replaced."
- "The Contractor shall repair any damage to galvanized truss members as a result of installing, shifting or removing temporary panels on proposed structures or existing structures to remain. Repaired areas shall be painted to match existing. Materials used in repairing galvanization and repainting shall be approved by the CEI prior to use.

4.7.12 <u>CGSP Roll Plots</u>

- The Consultant shall provide roll plots of the proposed CGSP at the 90% and 100% level of plans development. Additional submittals may be required at the discretion of the Authority.
- A separate roll plot shall be provided for each phase of construction. Each roll plot shall clearly identify the construction phase, construction activity and detours, if any. Multiple phases of construction shall not be combined on one roll plot. No exceptions allowed without prior Authority approval.

- All roll plots shall be at a scale of sufficient size to see laneage and TCP pavement markings should be shown if available. If not available, arrows indicating number of lanes should be shown at key locations.

- Each roll plot shall show:

  - Permanent or temporary overhead and/or ground mounted guide signing critical to guiding drivers through the construction area to their desired exit or entrance. Only the guide signing necessary for that particular phase of mainline, ramp and/or crossroad construction is to be shown.

  - Permanent sign and / or structure numbers matching the Signing and Pavement Marking Plans when applicable.

  - Permanent and/or temporary panel graphics to be installed on each structure and oriented to face the direction of travel (like Signing and Pavement Marking Plans).

Chapter 5

Sign Panel and Sign Structural Shop Drawings

5.1 Shop drawings are required for all overhead as well as single and multi-post mounted sign panels (including full and partial overlays) and sign structures within the project limits.

5.2 The Consultant shall be responsible for the review of:

- Standard regulatory and warning signs with respect to the elements specific to the Authority's design requirements, i.e. sheeting, color, size, thickness, etc.

- Guide sign panels and structures in detail and in accordance with established procedures.

- Fabricator's details for attachment of single post mounted panels to the horizontal brackets. The use of mechanical fasteners is limited to each end of the bracket. See VHB Special Provision. Holes shall not be "punched" at standard increments through the full width of the sign.

- Panel and hardware fabrications for single and multi-post assemblies to ensure compliance with aesthetic criteria when applicable.

- Structure manufacturer has included the capability of future cantilever arm length adjustment(s) when required in design.

- Structure manufacturer has provided for mounting mainline toll plaza approaching signs, i.e. single line DMS/static combination and adjacent static panel, on the same vertical plane. See Section 4.5.

5.3 One copy of each sign panel shop drawing submittal shall be transmitted to the Authority's GEC for a concurrent oversight review. Comments will be provided by the Authority's GEC to the EOR for incorporation into the shop drawing (unless the EOR notifies the Authority's GEC otherwise). The EOR shall not return the shop drawing submittal to the CEI prior to receiving and incorporating the Authority's GEC concurrent review comments.

5.4 One copy of each sign panel photograph shall be transmitted to the Authority's GEC for a concurrent oversight review. **The EOR shall not provide comments to the CEI prior to receiving and incorporating the Authority's GEC review comments.**

5.5 VHB Tape

Calculations for VHB shall be included as part of each shop drawing submittal for single and multi-post mounted panels.

There are circumstances under which the EOR's structural engineer may prohibit the use of VHB, i.e. single post sign attached to back of bridge railing, large guide sign on "T" column structure, etc. The EOR is fully responsible for ensuring the shop drawings reflect the use of mechanical fasteners per design rather than VHB.

The EOR shall be responsible for the review and approval of all VHB calculations related to structural support, (i.e. attachment of the sign panel to the wind beam(s)).

The quantity of VHB indicated for each panel must meet the minimum requirements as specified in the Special Provisions.

Review of VHB calculations for splice plate application is not required.

The EOR shall also review the Fabricator's attachment details for standard single post mounted panels, for use of VHB tape. If missing, the EOR shall request required VHB information through the CEI. Panel shop drawings should not be approved until the missing information is provided and reviewed.

5.6 Back of Panel Decal shall:

- Read "CFX" rather than "FDOT."
- Contain the CFX Project Number.
- Contain date of fabrication (DOF), fabricator's initials, sheeting manufacturer, name of sheeting and date of installation (DOI).
- Be provided for overlays as well as new panels.
- Be included in the shop drawings. If missing, EOR shall request detail.

5.7 The Authority's GEC shall be given a copy of all stamped, approved or approved as noted:

- Shop drawings for special design and standard, overhead and ground mounted sign panels.

- Sign structural shop drawings including all calculations for overhead tri-chord and box truss structures designed by the EOR or the Contractor.

- Calculations for multi-post ground mounted assemblies.

- VHB calculations for all single and multi-post ground mounted sign assemblies.

5.8 The EOR shall be responsible for the review and approval of all toll plaza related sign panels, including the conceptual details provided in the Guidelines when included in the plans.

5.9 If the Contractor submits signing and/or pavement marking materials other than those specified in the plans, the EOR shall not approve alternative materials without first providing the Authority's GEC with samples and receiving approval for use from the Authority.

5.10 Extruded sign panels shall not be allowed.

Chapter 6

Standard Signing

Contents:

Section 6.1

General Criteria

The Consultant is fully responsible for determining the standard signing required throughout the project, including the interchanging cross streets. The CSP may include post interchange signing and cross street trailblazing but does not include all necessary standard signs. The Consultant shall follow criteria in the documents listed in Chapter 2 as well as criteria specific to the Authority.

In addition, it is the responsibility of the Consultant to determine and follow the criteria of the governing agency for signing along intersecting roadways. If standards have not been established for intersecting roadways, the Consultant shall follow the Authority's specific criteria.

6.1.1 Close coordination between roadway lighting and sign assembly locations shall be required.

- Unless constrained by other roadway design elements, **signs shall be placed in advance of the nearest light pole** in order to provide optimum visibility (as viewed in the direction facing the sign).
- If the preferred criterion cannot be met, signs may be placed equidistant between consecutive light poles.
- The above criteria apply regardless of the presence of guardrail or walls.

6.1.2 Horizontal and vertical clearances shall adhere to requirements in FDOT Design Standard 17302 for the classification of roadway with the exception of Case V and Case VI. Case V is for use in business or residential areas only. Regarding Case VI, the Authority prefers to position all signs from the face of guardrail in accordance to criteria in the latest FDOT Design Standard for guardrail. If a particular situation is not addressed in 17302, the Consultant is to use Design Standard 700 and Chapter 2.11, Volume 1 of the FDOT PPM.

6.1.3 Warning signs shall be located using the distance requirements in Table 2C-4 of the MUTCD, Section 2C.05. Exceptions may be made subject to the approval of the Authority.

6.1.4 Placement of guide signs may require adjustment of standard signing locations (proposed and/or existing) due to visibility and appropriate spacing requirements.

6.1.5 Final locations of signs near the project limits shall be coordinated and agreed upon with the adjacent Consultant(s). This is particularly important with respect to standard signing which can easily become "overlapped" between projects.

6.1.6 All standard signs shall be fabricated using 3M Company Diamond Grade Cubed (DG3) Reflective Sheeting. Fluorescent Yellow DG3 is to be used for certain warning signs and fluorescent Yellow – Green is to be used for school crossing sign and auxiliary plaques only. See the Appendix for additional requirements.

6.1.7 MUTCD Sign W3-5 shall be used when reduced speed ahead signing is required.

6.1.8 Signing shall not be placed within the paved gore or paved shoulder areas.

6.1.9 Size:

- Mainline and ramps

With the exception of ONE WAY (R6-1) signs, use the “Freeway” or “Oversized” criteria in MUTCD Tables 2B-1 and 2C-2 or the largest size in the SHSM or 2012 Supplement, whichever is greater. Other exceptions may be made at the direction of the Authority or the Authority’s GEC.

Panels may be downsized due to location and/or design constraints; however, downsizing should be limited to one increment, i.e. 48” x 48” down to 36” x 36”.

Possible size constraints are listed below; however, the Consultant is responsible for identifying other potential locations within the project.

  - Median mounted assemblies when clear zone requirements cannot be achieved.

  - Barrier wall mounted assemblies to lessen encroachment into paved shoulder(s).

- Crossroads

When governing agencies do not have specific criteria, MUTCD Tables 2B-1 and 2C-1 clearly specify panel sizes to be used on conventional roadways.

The Authority recommends use of the “Expressway” category on high speed multi-lane facilities if possible.

6.1.10 The following regulatory signs shall be included on all plans:

- R5-10b, "No Pedestrians or Bicycles" (on entrance ramps near terminus at cross street).
- R8-7, "Emergency Stopping Only" (along mainline).

6.1.11 Regulatory sign R3-8 **shall not** be used on the mainline in advance of a lane drop at a two lane exit with optional lane without prior approval from the Authority.

6.1.12 FTP-43-06 (or latest FDOT code), “DIAL FHP (*347)” shall be included along the mainline when applicable. General guidelines for location are as follows:

- After crossing county lines.
- Downstream of major arterials and/or major decision points.
- Downstream of freeway to freeway interchanges.

Note that the need for these signs is decreased in urban areas.

6.1.13 <u>Post Interchange Signing</u> (MUTCD Section 2E.38)

- Mainline

Post interchange signing is required on all new Authority facilities and shall be adjusted or replaced on existing roadways when applicable.

It shall consist of a Route Confirmation Marker (RCM), a speed limit sign (R2-1) and, when appropriate and / or shown on the CSP, a distance sign **in that order** (in direction of travel).

Locate the RCM 500’ from the point where the acceleration lane taper meets the mainline through lane in direction of travel.

When the acceleration lane becomes an auxiliary lane, the RCM location must be determined on a per case basis but should adhere to MUTCD criteria regarding spacing between the post interchange signs whenever possible.

- Crossroads

Post intersection signing along interchanging crossroads shall be included downstream of each exit ramp in both directions of travel. Consultant to adjust spacing of the RCM, R2-1 and distance signs appropriately to crossroad.

Proposed signing will be dependent on the proximity of existing signs therefore, the Consultant shall verify existing signing within one mile of the interchange in both directions of travel.

Crossroad signing is particularly important if the crossroad is a numbered route.

6.1.14 Wrong Way Traffic Control

All exit ramps shall include “DO NOT ENTER”, “ONE WAY” and “WRONG WAY” signs. **Two assemblies of each are required** (one on each side of ramp) unless design constraints dictate otherwise. Locations shall be in accordance with MUTCD Section 2B.41.

ONE WAY signs shall be 36” x 12”. All others shall be “Freeway” or “Oversized”.

Left and right turn prohibition signs shall be used only when the geometry and channelization do not prohibit such a maneuver from the crossroad.

All sign assemblies shall meet standard vertical clearances. The MUTCD Optional three (3) foot mounting height will not be allowed within the Authority’s jurisdiction.

6.1.15 R2-1 (Speed Limit) and W3-5 (Reduced Speed Ahead)

- Dual installations of both sign assemblies shall be required when there are more than two lanes of travel in a single direction.

- MUTCD Section 2B.13 Guidance states that speed reduction signing should be used when speeds are reduced more than ten (10) mph. The Authority requires speed reduction signing when the reduction **equals** ten (10) mph.

6.1.16 Milepost Markers (D10-4A, D10-5A)

The preferred location is along the right hand side of the roadway (in the direction of travel) and on the mainline rather than ramps.

Median and median barrier wall mounted milepost markers are only allowed as directed by the Authority.

Do not mount milepost markers on bridge railings.

Calculated milepost stationing will be provided by the Authority or the Authority's GEC. Station locations may be adjusted as needed to avoid bridges or conflict with other roadway features. However, location adjustments greater than one hundred (100) feet require Authority approval prior to including in plans.

If the location of a milepost in one direction of travel must be adjusted from the calculated station, the same milepost in the opposite direction shall be adjusted to match.

The Authority uses an enhanced special design for milepost markers. These special Markers are located every one half (1/2) mile unless directed otherwise by the Authority. The design shall include:

- Cardinal direction
- Toll route shield
- Word "MILE"
- Mileage expressed as XX or XX.5 on one line

See the Appendix for conceptual panel designs designated as D10-4A and D10-5A. The information on the conceptual detail shall remain on one sheet for Authority maintenance purposes, i.e. **do not** move the toll shield, cardinal direction, Table or notes to separate sheets within the plans set.

The Consultant shall use a permanent roadway feature such as a bridge, overhead sign structure, etc as Location Reference Points in the table on the Appendix detail sheet. Single or multi-post signs are not to be considered as "permanent roadway features".

FDOT Design Standard 17302 shall govern vertical clearance regardless of mounting location.

6.1.17 Lane Drop Signing

- Acceleration Lanes
    - Single lane entrance ramps: Signing shall not be provided.

- Two lane entrance ramps: Signing shall not be provided for first lane drop. Signing is required for the second ramp lane merge into mainline traffic.

- Mainline Lanes:

  Standard warning signs may be used to supplement the preferred overhead signs (see 4.2.18) if deemed appropriate by the Consultant and will not result in sign clutter.

  One or two standard warning signs should be used if geometry does not allow adequate space for more than one overhead panel.

- Crossroad Lanes:

  Signing is required per criteria in FDOT Design Standard 17346. When roadway geometry does not provide sufficient distance to meet minimum sign spacing criteria, the Consultant shall provide the most optimum visibility possible.

  - Every effort shall be made to avoid beginning a crossroad lane drop in the approach direction and ending in the departure direction of a ramp terminus. The entire lane drop and merge should occur either upstream or downstream of the intersection.

  - If a lane drop occurs on a crossroad downstream of an intersection, signing shall not be specified in advance of the intersection. No exceptions allowed without prior approval from the Authority.

A minimum of two assemblies are required, MUTCD signs W4-2 and W9-1 for roadways and ramps (does not include toll plazas). **Coordination between signing and roadway designers is required for all lane drops within the project limits.**

6.1.18 Begin/End system signs shall be located at the jurisdictional boundary when an Authority facility meets a "Freeway" type facility governed by another agency. See the conceptual details in the Appendix.

6.1.19 Signs of dissimilar shape shall not be mounted back to back. For example, a STOP sign shall not be mounted on the same post behind a DO NOT ENTER sign. STOP and YIELD signs shall always be mounted on separate sign assemblies.

6.1.20 Exit Speed Warning and Ramp Speed Warning for straight alignment ramps

Exit / Ramp speed warning signs are not to be installed unless warranted. MUTCD signs W13-2 and W13-3 are generally:

- Not required when the ramp design speed at the mainline physical gore is 50 mph or greater.

- Required when the ramp design speed at the mainline physical gore is less than 50 mph.

MUTCD sign W13-2 (Exit Speed Warning) shall be installed along the deceleration lane. MUTCD sign W13-3 (Ramp Speed Warning) shall be installed along the ramp downstream from the theoretical gore. See MUTCD Section 2C.14 and Table 2C-5.

The Consultant may recommend additional uses of exit or ramp speed warning signs based on other roadway characteristics, however, recommendation must be approved by the Authority or the Authority's GEC.

6.1.21 Loop and Partial Loop Ramp Signing

The Authority uses all or a combination of the following signs in an effort to provide as much warning as possible for loop and partial loop ramps.

MUTCD signs W13-6 and/or W13-7 shall be used on all loop or partial loop ramps. The W13-6 shall be installed along the deceleration lane and the W13-7 along the ramp downstream from the theoretical gore.

Curve Warning Signs W1-11A and W1-15A shall:

- Be installed on all loop and partial loop ramps depending on use of W13-7 and available space between signs.

- Include the recommended speed limit within the main body of the panel, i.e., no advisory speed plaque.

    - The Consultant shall determine the appropriate speed, review and revise the conceptual details in the Appendix and include in plans.

MUTCD signs W13-2 and W13-3:

- A conspicuity strip shall be added to all W13-2 and W13-3 signs. A conceptual design is provided in the Appendix.

- When existing signs are to be upgraded, replace the existing sign in its entirety such that the sign face and conspicuity strip are fabricated using a

single sheet of aluminum. Do not attach separate conspicuity strips to an existing panel.

MUTCD chevron alignment signs W1-8 are to be specified when conditions meet MUTCD criteria in Section 2C.07 and Table 2C.05 or on existing ramps with a history of run-offs, guardrail hits, etc. Signs are not to be installed behind (or on) barrier walls but may be installed behind guardrail.

The graphic on MUTCD warning signs W1-11A, W1-15A, W13-6 and W13-7 shall depict actual ramp geometry as closely as possible. All special design ramp diagrams shall be detailed in the Guide Sign Worksheets. See the design example provided in the Appendix.

The criteria in this section apply to mainline and crossroad approaches to loop / partial loop entrance and exit ramps. Relocation of existing crossroad assemblies is an option in order to accommodate enhanced ramp signing provided the purpose and/or effectiveness of the existing sign is not compromised. See the Appendix for examples of each.

6.1.22 Installing and covering permanent standard sign panels shall not be allowed without the approval of the Authority prior to installation.

6.1.23 Signs W11-2 and W16-7p shall be specified at all crosswalks traversing free flow right turn lanes at ramp/cross street intersections.

6.1.24 511 signing shall be located along the mainline at the beginning of each Authority facility. In addition, for tourists leaving the airport, one sign shall be located along westbound SR 528 west of the SR 436 interchange and along southbound SR 417 south of the Boggy Creek Road interchange.

6.1.25 School Route signs:

- Consultants for projects containing a new interchange or existing interchange improvements shall contact the department responsible for school safety within the applicable jurisdiction. The Consultant shall obtain confirmation that the new or existing ramp termini are or will be designated school crossings within a dedicated school route. School crossing signs shall be shown in plans as necessary.

- The Consultant shall provide documentation of coordination to the Authority with 60% plans submittal.

6.1.26 Type 3 object markers for guardrail: DG3 sheeting shall be directly applied to the approach end in a rectangular shape conforming to the size of the approach end. See MUTCD Section 2C.65.

Section 6.2

Route Markers

In addition to standard criteria in the manuals listed in Section 6.1, route marker assemblies shall also adhere to the following:

6.2.1 Mainline Post Interchange Route Confirmation Marker (RCM)

Mainline RCMs shall be single post mounted assemblies. **Note that structural engineering tasks will be required**.

The toll shield shall be 48” x 60”.

Mainline RCMs shall be a special single panel design. Panels shall include:

- Cardinal direction
- Toll route shield (TM)
- Authority logo L-6

See the Appendix for conceptual panel and structural designs. The information on the conceptual panel shall remain on one sheet, i.e. **do not** move the toll shield, logo, cardinal direction or notes to separate sheets within the plans set.

6.2.2 Trailblazers

Toll shield TM2 shall be used on all trailblazers along the crossroad approach to an interchange as well as off-site roadways leading to the applicable crossroad.

Off-site trailblazers are typically limited to two (2) miles from the interchange in urban areas and three (3) miles in rural areas. These limits may be adjusted on a per case basis at the discretion of the Authority.

Separate top and bottom auxiliary panels shall be provided for each route shield in multi-route assemblies. General Service plaques (hospital, airport, etc) are typically located to the right of the route shield (in direction facing sign). See the Appendix for typical route marker configurations.

Single panel route marker designs may be used for trailblazers on the mainline (TO/I-4/arrow, TO/FTE/arrow, etc) as well as trailblazers on ramps at crossroad termini (SOUTH/SR XX/arrow) as directed by the Authority. The Consultant is responsible for confirming single panel design with the Authority since these assemblies are not typically shown on the CSP.

Single panel designs shall not be used when the assembly is not within the Authority's jurisdiction, i.e. beyond the limits of LA R/W.

6.2.3 Junction assemblies

- Major Crossroads

Assemblies shall be single post mounted. **Note that structural engineering tasks will be required.**

The toll shield (TM2) shall be 36" x 48".

Configuration of the assembly shall conform to the conceptual detail in the Appendix. The Consultant shall review, revise as necessary and include in plans.

- Minor crossroads

The toll shield (TM2) shall be 24" x 30".

Configuration of the assembly shall conform to the conceptual detail in the Appendix.

6.2.4 Toll shields (TM2) for route markers along approach roadways (i.e., advance route turn, route turn, etc.) as well as off-site trailblazers shall conform to the following sizes:

- Major crossroads: 36"x 48".
- Minor crossroads: 24"x 30".

6.2.5 On existing facilities, components of an existing route marker assembly may be reused with the following stipulations. The Consultant shall verify:

- Sheeting is the same on all panels in final assembly.
- Date of fabrication (DOF) shown on the back of panel decal indicates the panel(s) is less three (3) years old.

- Compatibility of size and color with new shields.
- Physical condition of existing panels, post and foundation for continued use.
- If existing post(s) will meet current design criteria for proposed assembly arrangement.

6.2.6 Authority logos

There are six Authority logos shown in the conceptual details in the Appendix. The Consultant shall only include logos specific to the project. They shall be used as follows:

- Logo L-1, Mainline Post - Interchange Route Marker, multi-panel assembly configurations.
- Logo L-2, Bridge mounted (roadways crossing under the mainline) and Crossroad Junction Assembly with 36" x 48" toll shield.
- Logo L-3, Crossroad Junction Assembly with 24" x 30" toll shield.
- Logo L-4, Begin/End System signs.
- Logo L-5, Toll Plaza parking lot signs.
- Logo L-6, Mainline Post - Interchange Route Marker, single panel design.

6.2.7 Auxiliary panels

Auxiliary panels positioned above the route shield (toll or otherwise) shall:

- Match the width of the route shield.
- Require special detail(s) in the Worksheets if required size does not match standard as shown in the SHSM.
- Be designated using the national code with an “X” or an “XX” added to the end (i.e., M2-1X, M2-1XX, etc.).

The Authority prefers to use its own designs for auxiliary panels positioned above a 36” x 48” route shield. The 36” x 18” standard designs as shown in the 2012 Supplement to the SHSM may only be used over US, State or County route shields when the assembly is beyond the Authority’s LA ROW

limits. In cases where an Authority toll shield is to be installed adjacent to a US, State or County shield, all top mounted auxiliary panels shall match the Authority's preferred design.

Conceptual details in tabular format are included in the Appendix. The Consultant shall review, revise as necessary and include in plans. Only include details specific to plans.

The size of directional or advance turn arrows and lane designations positioned under a 36" x 48" toll shield shall match the "Oversized" category in MUTCD Table 2D-1 or the largest size shown in the 2012 SHSM Supplement.

Top and bottom auxiliary panel colors shall match the associated route shield.

6.2.8 Route Marker Clusters

A route marker cluster consists of two or more route shields and their accompanying auxiliary panels. See FDOT Design Standard 11860, sheets 1 and 2 for graphical illustrations of route marker clusters.

When the total panel area of a dual route marker assembly exceeds 30 SF, each shield and its associated auxiliary panels shall be specified as a separate single post assembly. Plans shall indicate side by side installation.

There may be instances when a single post assembly is needed based on other roadway constraints. There may also be locations where the Authority would prefer a single post configuration. In either case, if the total panel area is 31 or more SF structural details are required in plans for each such location.

Section 6.3

Exit Gore Signs

6.3.1 The Consultant shall specify MUTCD sign E5-1a for non-loop ramps.

6.3.2 The Authority requires special design panels for loop and partial loop ramps. Conceptual details of signs E5-1ab and E5-1ac are included in the Appendix. The Consultant shall review, revise as necessary for specific project, and include in plans.

6.3.3 Regardless of exit number or ramp configuration, all exit gore signs shall be 6' x 5'. The Consultant is to meet horizontal spacing criteria between numeral(s) and suffix in MUTCD 2E.37 if possible without downsizing the copy or arrow.

6.3.4 The supplemental speed limit plaque E13-1P (MUTCD 2E.37) shall be specified for:

- All exit gore signs for loop and partial loop ramps
- High crash locations
- Locations meeting the warrants for EXIT SPEED warning sign
- Locations as specified by the Authority

The E13-1P shall be sized in accordance with MUTCD Table 2E-1 but shall in no instance be wider than the exit gore sign.

6.3.5 A conceptual detail of an E5-1a panel is provided in the Appendix. The Consultant shall review, revise as necessary to meet project specific needs and include in plans.

6.3.6 All exit gore assemblies shall be single post. The Consultant shall verify if structural design(s) are required per the latest FDOT Design Standards. If required, all special design details shall be included in the plans.

Section 6.4

Structural Issues

6.4.1 The Consultant shall prepare details for signs that require installation on barrier walls, noise walls, etc. Configuration of structural design(s) shall be as similar as possible to the conceptual design provided in the Appendix.

6.4.2 The Consultant shall provide structural design and details for single post mounted RCMs and Junction assemblies as indentified in Section 6.2 and the conceptual details in the Appendix.

6.4.3 All special details and structural designs shall be included in the Signing and Pavement Marking plans.

Chapter 7

Pavement Markings

Contents

Section 7.1

General Criteria

Pavement Marking Plans shall be prepared in accordance with the applicable conceptual details in the Appendix, the most current version of the FDOT Plans Preparation Manual, the FDOT Design Standards and the MUTCD. The criteria contained in this chapter will apply to all facilities within the Authority's jurisdiction as well as to interchanging crossroads in the absence of governing agency standards.

7.1.1 Close coordination between roadway construction plans and pavement marking plans shall be required. Proposed pavement markings shall extend through the entire limits of the project. This is particularly important when construction plans contain a combination of new roadway construction, widening and/or milling and resurfacing activities.

7.1.2 Resurfacing is the preferred method for obliterating existing pavement markings on asphalt. Where resurfacing is not practical, water blasting may be used. Grinding is limited to concrete pavement. Method of pavement marking removal shall be approved by the Authority prior to beginning removal activities.

7.1.3 Final locations of pavement markings near the roadway construction project limits shall be coordinated and agreed upon with the adjacent Consultants. The Consultants are fully responsible for initiating coordination efforts.

7.1.4 When a toll plaza is included within the roadway construction limits but is under a separate contract, the Authority will advise each Consultant which plaza specific markings are to be included in each plan set. See Section 14.2.1.

7.1.5 The Authority prefers to use specific pavement marking materials, barrier wall and/or guardrail linear delineation, RPMs and delineators that may vary from FDOT standards. The Consultant is responsible for initiating coordination with the Authority or the Authority's GEC regarding Special Provisions as needed.

7.1.6 Test applications of additional and/or alternate materials for pavement marking, barrier wall and/or guardrail linear delineation, RPMs and/or delineators may also be included within the project limits at the direction of the Authority.

7.1.7 The Consultant is responsible for researching and adhering to the pavement marking standards of other agencies when striping is proposed on

crossroads. A copy of the governing agency's criteria, if other than FDOT, shall be provided to the Authority for approval prior to the 60% submittal.

7.1.8 In locations requiring thermoplastic pavement markings, paint shall be used as the initial application unless directed otherwise by the Authority. See the Pay Item Note in the Appendix. **However, only the final pavement marking material is to be shown in the Tabulation sheet(s) and the Plan View sheet(s).**

7.1.9 Turning Vehicle Templates or computerized equivalent for the geometric design vehicle shall be used at all intersections to:

- Verify stop bars are located properly relative to turning movements.
- Check all left and right turn movements for conflicts with physical features such as median noses, traffic separators and curb returns.
- Establish the correct location and radii for dotted turning guide lines.

The design vehicle turning path, i.e. the unobstructed area needed for wheels plus overhang if applicable, should be used to establish the dotted turning guide line through an intersection. The vehicle turning path should first be based on the intersection control radius used during geometric design and shown in the roadway plans.

However, if the turning vehicle templates indicate the need for adjustments to roadway elements (median nose, traffic separator, curb return, etc.) or to the stop bar locations are necessary, the Consultant is responsible for coordination between all relevant design disciplines.

7.1.10 Temporary Pavement Markings and RPMs should be considered for:

- Overlapping limits of construction between separate projects. The "last" project under construction should include the removal of the temporary pavement markings and installation of the "final" pavement marking design and materials through the overlapped areas.
- Projects with staged construction which require restriping within 12 months.

If specified, plans shall clearly limit duration to 12 months maximum.

Material to be used shall be determined on a per case basis as directed by the Authority or the Authority's GEC. The Consultant may propose an

alternate material provided documentation addressing the durability and warranty for proposed alternate is provided to the Authority for approval prior to inclusion in the plans.

Section 7.2

Specific Criteria

Pavement Marking Plans shall also adhere to the following criteria specific to the Authority. However, the Consultant is reminded that any criteria contained in this section relative to intersecting crossroads **shall not** take precedence over the established standards of the governing agency for the crossroad.

See the Appendix for examples of specific pavement marking treatments developed by the Authority for use on auxiliary lanes, lane drops and two lane exits.

7.2.1 3M Company Stamark Preformed Patterned Retroreflective Pavement Marking Tape (PPRT), Series 380IES is to be specified for all solid lane lines, edge lines, skip striping, E-PASS ONLY 35 MPH pavement messages and gore markings on asphalt and concrete pavement on facilities within the Authority's jurisdiction.

7.2.2 Stop bars, crosswalks, standard pavement messages and directional arrows shall be thermoplastic.

7.2.3 9" Contrast (PPRT, white/black) shall be specified for all solid lane lines, 10'-30' skip striping and white edge of pavement lines within the Authority's jurisdiction.

7.2.4 Wrong Way pavement arrows shall not be interspaced with lane use directional arrows at ramp terminals. Wrong Way arrows shall be positioned, when appropriate, in advance (in the direction of travel) of the lane use directional arrow farthest from the stop bar.

7.2.5 Shoulder exit numbers shall be specified at all interchange exits in accordance with FDOT Design Standard 17346.

7.2.6 A non standard pavement arrow has been developed for multi-lane exits with optional lanes. The <u>Option Lane Directional Arrow</u> shall:

- Be used typically in conjunction with right turn arrow/ONLY sets in the exit only lane and an adjacent through/right turn arrow in the option lane.
- Be used at all multi-lane exits with an optional exit/through lane.
- Be used at all mainline toll plazas with an optional exit/through lane to the cash plaza.

- Be used regardless of how the exit is signed, i.e. using APL, APLM or traditional panels on the exit direction structure.

- Typically be located in the vicinity of the theoretical gore with the tips of the exit and through arrow heads aligned with the center of their respective lanes.

- Be black/white contrast 3M PPRT or pre-formed thermoplastic on concrete pavement.

- Be preformed thermoplastic, standard thermoplastic or 3M PPRT on asphalt pavement as directed by the Authority on a per project basis. It is the Consultant's responsibility to verify desired material with the Authority, include on applicable plan view sheets and revise pavement marking general note(s) accordingly.

Conceptual details are provided in the Appendix. The Consultant shall review, revise as necessary and include in plans.

7.2.7 3' – 12 ' skip striping, (12" White PPRT) shall be used for the following conditions:

- Lane Drops: At dual lane exit ramps with and without optional lanes and ramp toll plazas with dedicated E-PASS lanes. See the Appendix for additional details.

- Auxiliary Lanes: From the theoretical gore of a **single lane** entrance ramp to the theoretical gore of a **single lane** exit ramp.

- Tapered Exit Ramp: From the beginning of the taper from the mainline through lane to the theoretical gore of the exit ramp (in direction of travel).

- Parallel Acceleration Lane: From the end of the 8" white solid lane line through the full length of the accel lane and taper (in direction of travel).

- Parallel Deceleration Lane: From the beginning of the taper from the mainline through lane to the theoretical gore of the exit ramp (in direction of travel).

- Mainline Lane Drops: When dropping a basic mainline lane downstream from an exit ramp, typically the 3'-12' skip will begin in the vicinity of the exit ramp physical gore and extend through the taper.

- When a 12” (3’-12’) skip lane line crosses a concrete bridge deck, the pattern shall be revised as follows:
    - A 3 foot segment of 12” solid white stripe abutted by a 3 foot segment of 12” solid black stripe followed by a 9 foot gap.
    - RPMs are to be located in the center of the 9 foot gap for a total center to center distance of 15’.
- See the Appendix for additional details.

7.2.8 The 8” white solid lane line required in a parallel acceleration lane per FDOT Design Standard 17345 shall extend for one fourth (1/4) the length of the full width acceleration lane as measured <u>from the theoretical gore</u> to the beginning of the taper (in direction of travel).

7.2.9 <u>Raised (Retro-Reflective) Pavement Markers (RPMs)</u>

RPMs shall be installed along the entire length of the project in accordance with FDOT Design Standards as well as the following Authority specific applications or Design Standard clarifications.

RPMs shall be:

- 40’ OC through the begin/end acceleration and deceleration lane edge line tapers along crossroads at ramp termini.
- 40’ OC along tapers for mainline lane drops.
- 60’ OC through exit ramp recovery areas.
- 20’ OC along 8” acceleration lane line.

RPM’s shall not be specified along roadways or ramps with barrier type curb and gutter.

RPM’s shall adhere to the installation policy of the governing agency along bike lanes.

When a through lane (auxiliary or mainline) becomes an EXIT ONLY lane, edge line RPMs shall begin adjacent to the beginning of the 12” solid white lane line (in direction of travel).

When an acceleration lane becomes a through lane (auxiliary or mainline), edge line RPMs shall end (in direction of travel) at the most appropriate of the following two locations unless directed otherwise by the Authority or the Authority's GEC:

- Begin/end ramp baseline.
- Begin/end 8" solid white lane line extending from theoretical gore.

7.2.10 Roadside delineators shall be installed on all interchange ramps within the Authority's jurisdiction in accordance with FDOT Design Standards as well as the following Authority specific applications or Design Standard clarifications.

- Mainline Ramp Termini (in direction of travel):
  - Normal Tapered Exit and Exit Only Ramps: 40' on center (OC) from the beginning of the transition (taper) to the physical gore. 300' OC to the crossroad terminus.
  - Normal Tapered Entrance Ramp: 300' OC from the crossroad terminus return to the physical gore. 40' OC from the physical gore to the end of the transition (taper).
  - Normal Tapered Entrance Ramp with Added (Auxiliary) Lane: 300' OC from the crossroad termini to the physical gore. 40' OC from the physical gore to the theoretical gore.
  - Parallel Entrance and Exit Ramps: 40' OC from begin/end of the transition (taper) to the point of full width acceleration/deceleration lane. 300' OC through the full length of the acceleration/deceleration lane. 40' OC from the theoretical gore to the physical gore. 300' OC from the physical gore to the crossroad terminus.

Placement of white delineators along loop ramps shall follow the above criteria for mainline ramp termini and shall end at the physical gore. Single yellow delineators shall be installed for the full length of the ramp in accordance with FDOT Design Standard 17345.

When a through lane becomes an EXIT ONLY lane or when an entrance ramp becomes a through lane (auxiliary or mainline), the delineators shall begin / end at the same location as the edge line RPMs.

- Crossroad Ramp Termini (in direction of travel):

- Tapered Exit Ramp: 40' OC from the beginning of the return or curb return to the end of the transition (taper).

- Tapered Entrance Ramp: 40' OC from the beginning of the transition (taper) through the limits of the return or curb return.

- Parallel Entrance and Exit Ramps: 40' OC from begin/end of the transition (taper) to the point of full width acceleration/deceleration lane. 300' OC through the full length of the acceleration/deceleration lane. 40' OC through the limits of the return or curb return.

When the return radius (with or without curb and gutter) is small (generally less than 50') the 40' OC spacing shall extend to a point 100' up ramp from the PC/PT of the Return.

Delineators shall be continued through sections with guardrail.

7.2.11 Linear Delineation

3M Linear Delineation System, Series 340 is to be specified on barrier walls and guardrail into and along the high side of loop / partial loop ramp curves and other locations as determined by the Authority.

- Panels are to be thirty-four (34) inches long and six (6) inches wide on barrier walls and guardrail.

- Panels are typically spaced eighteen (18) inches apart on barrier walls. However, spacing may require adjustment depending on the total length of each wall such that all panels are 34" long.

- Sheeting color shall match adjacent edge line.

- Plans are to clearly specify:

  - Overall Begin/End station ties for limits of installation.

  - Installation per 3M specifications and provide 3M contact information per the most current Product Bulletin on the 3M web site.

7.2.12 Lane drop striping

Mainline lane drops at other than exit ramps:

- Two (2) sets of merge arrows and pavement messages are required however, three (3) sets are preferred if space permits.

- A merge arrow/pavement message set shall not be located beyond the beginning of the pavement or striping taper, i.e., in a location having less than the full merging lane width (in direction of travel).

Two Lane Entrance Ramps:

- The outside lane is striped using standard 10'-30' skip striping that shall end (in direction of travel) 300' from the last point at which the lane is a full 12' in width.

- The inside lane is striped in accordance with the criteria in 7.2.7 for a Parallel Acceleration Lane.

- See detail in the Appendix.

7.2.13 Stop bars should:

- Be perpendicular to the ramp and crossroad travel paths.

- Extend across bike lanes but not through gore areas or onto paved shoulders.

Stop bar placement shall maintain a minimum clearance of 4 feet between the near edge of the stop bar and the near edge of the crosswalk or sidewalk when crosswalk is not proposed.

A staggered configuration between through and left turn lanes is allowed if necessary to meet turn radii.

7.2.14 Solid Lane Lines

The criteria below will apply to the Authority's ramps as well as to crossroads without governing agency criteria. Use of PPRT material only applies to the Authority's ramps.

- Through movements:

    - The length approaching stop bars at signalized intersections should be 200' whenever possible. If 200' is not possible, use the distance to the closest set of advance signal loops.

- Ramp lane lines shall be 9” Contrast PPRT.

- Left turns:

  - Lane lines shall begin/end in accordance with Criteria in FDOT Design Standard 17346, sheet 11, under stop conditions with or without stop control.

  - 9” Contrast PPRT shall be used when single or dual left turn lanes are created by development of a turn bay.

  - 8” White PPRT shall be used when a through lane becomes a left turn lane.

- Right turns:

  - Lane lines shall begin/end in accordance with Criteria in FDOT Design Standard 17346, sheet 11, under stop control, free flow or yield conditions.

  - 8” White PPRT shall be used for all right turn lane lines.

The pavement message ONLY shall be used when a through lane becomes either a left or right turn lane. The bottom of the word ONLY shall be aligned with the beginning of the lane line (in direction of travel).

7.2.15 Crosswalks shall be:

- Specified in accordance with FDOT PPM (Vol. 1) criteria, i.e. “at all side streets where pedestrian facilities meet the roadway.”

- Special Emphasis crosswalks shall be specified at:

  - Signalized intersections.

  - Designated school crossings within a dedicated school route. See Section 6.1.25.

  - Free flow right turn lanes.

- Special Emphasis shall be designed:

  - In accordance with the FDOT Design Standards.

- Using 10’ minimum width as measured from the inside of the transverse bars.
- With longitudinal lines parallel to the wheel path of through vehicles.

- Standard crosswalks shall be:
  - Specified at unsignalized intersections and major driveways.
  - Parallel 12” white lines.
  - A minimum 6’ to maximum10’ width.

A minimum clearance of 4’ is required between a crosswalk and stop bar as well as a crosswalk and a concurrent vehicle travel path or bike lane.

Crosswalks take priority. Striping of any type shall not extend through crosswalk areas.

7.2.16 Dotted turning guide lines shall be:

- Provided at all intersections with dual left or right turn lanes.
- Provided for single left turn lanes on heavily skewed angles.
- Established using Turning Vehicle Templates for the project design vehicle or a computerized equivalent.
- One line between the dual turn lanes as an extension of the lane line separating the two turning lanes.
- 2’-4’ thermoplastic skip striping.

Dotted guide line(s) may be provided for through movements at intersections with heavily skewed angles.

7.2.17 Gore and Channelization striping (8” & 18")

8” shall be used for edge lines around gore areas and roadway transitions.

18” chevrons shall be specified:

- In all striped gore areas at 20’ on center for entrance and exit ramps within the Authority’s jurisdiction.

- In all gore areas around channelization islands at ramp / crossroad termini. Spacing should be 10' center to center for most island gores however; may be reduced to 5' center to center if necessary. Reduced spacing shall be approved by the Authority or the Authority's GEC.

18" Diagonals shall:

- Be specified around ramp channelization islands at ramp / crossroad intersections if the offset between the 8" edge stripe and the concrete island or concrete curb is over one (1) foot.

- Not be specified around ramp channelization islands at ramp / crossroad intersections if the offset between the 8" white edge stripe and concrete island or concrete curb is one (1) foot or less.

- Shall be specified through roadway transition areas in accordance with the latest FDOT Design Standard.

18" gore striping shall not extend into the paved gore or paved shoulder areas.

7.2.18 Speed reduction markings should be considered when geometry or conditions warrant their use. See MUTCD Section 3B.22. The Consultant shall discuss his/her recommendation with the Authority for concurrence prior to including in plans.

7.2.19 Crossroad RAMP Pavement Message

At times, interchange geometry requires drivers on the crossroad to make a seemingly opposite turn movement from the direction they want to travel on the expressway. For example, a driver on southbound Rouse Road must make a left turn (east) to access the ramp for westbound SR 408 or "turn left to go right".

When the turn lane(s) movement is opposite the desired expressway direction, the pavement message RAMP shall be added in advance of (in direction of travel) each directional arrow or each pavement message ONLY when present.

The RAMP pavement message should be considered wherever it may be beneficial or as directed by the Authority.

7.2.20 Horizontal Signing

When the Authority determines horizontal signing is appropriate, words shall be eight (8) feet long with spacing in accordance with FDOT Design Standard 17346. All letters not included in the Design Standard can be found in the SHSM.

Route shields are to be sized as follows.

- 6’ x 13’ for posted speeds less than 45 MPH.
- 6’ x 15’ for posted speeds from 45 MPH to 55 MPH.
- 8’ x 20’ for posted speeds greater than 55 MPH.

The longitudinal space between each element in the horizontal sign shall also be a function of the posted speed limit.

- 30’ between elements for speeds less than 55 MPH.
- 40’ between elements for speeds equal to or greater than 55 MPH.

Conceptual details (preformed thermoplastic) are provided in the Appendix. The Consultant shall review, revise as necessary and include in plans.

The above criteria do not apply to EPASS ONLY pavement messages approaching a ramp toll plaza.

The Consultant should suggest use of horizontal signing based on engineering judgment as early as feasible in the design process. However, Authority concurrence is required prior to including in final plans.

Chapter 8

Tabulation Sheet and Pay Item Numbers

Contents

Section 8.1

Tabulation Sheet

Tabulation sheets shall be prepared in accordance with the most current FDOT Plans Preparation Manual. In addition, the Tabulation Sheets shall adhere to the following:

8.1.1 The national code and size shall not be listed for single post signs or for component panels in multi-post assemblies for trailblazers, dual route markers, etc. National codes and sizes shall be shown only on the Plan View Sheets.

8.1.2 **Do not** include pay items for future or ultimate panels when layout designs are included in the plans. Future or ultimate panels are for structural design purposes only.

8.1.3 Pay item numbers and quantities for painted pavement markings shall not be shown.

8.1.4 The minimum font size allowed on tabulation sheets shall meet the “desired” English criteria for B-size plans (11" x 17") as specified in the FDOT CADD Production Handbook.

Section 8.2

Pay Item Numbers

Pay item numbers shall be in accordance with the most current FDOT Basis of Estimates (BOE) or as listed in this section. The Consultant is responsible for updating pay item numbers through preparation of Bid Plans. In addition, the pay item numbers shall adhere to the following criteria.

8.2.1 Pay item numbers for overhead span and cantilever sign structures shall be established using the calculated truss length from the actual structural designs, rather than the lengths determined from dimensions shown on the cross section sheets. The calculated length can typically be found on the "Table of Cantilever Truss/Span Truss Structure Variables".

8.2.2 The pay item numbers and descriptions for signing shall follow the BOE protocol with the following exceptions:

- The Authority does not adhere to the FDOT criteria limiting cantilever lengths to 50' maximum, therefore code "C" in 700-4-ABC using the correct linear feet range and ignore "span only" when present in the BOE. If C=5 through 8 for a cantilever, then:
  - Add an A to the end of the pay item number, i.e. 700-4-ABCA.
  - Add "(Cantilever)" to the description.
  - Add a Pay Item Note.
- Add the unique structure number (GM-X, OC-X, OT-X, BM-X) to the descriptions for 700-4-ABC and 700-4-ABCA.
- Supplemental panels shall be coded using the appropriate **non-lighted range and associated number for BB.** Supplemental panels include but are not limited to:
  - All attachments 0-50 SF, including exit number plaques.
  - NO CASH
  - Variations of EXPRESSWAY ENDS and ALL TRAFFIC designed for removal.

- o Any other panels to be attached to the main panel that are designed for removal at a later date,

8.2.3 Add the special design sign number(s) to the descriptions for item 700-3-ABB.

8.2.4 All panels shall be included in the total SF area in the pay item for single post assemblies, **including signs mounted back to back**.

8.2.5 As of the 2014 edition of the BOE, the standard FDOT pay item number for single post signs can be used for special design RCMs, JCT markers, wall mounted assemblies or flip-up signs. However, Consultants shall also adhere to the following for Authority projects:

- Use 700-1-74 for RCMs, JCT markers and any other single post mounted sign having 31 SF or more in total panel area. **Structural design data is required in plans.**

- Add (Flip-up) to the description for the appropriate pay item number.

- Use A=2 or 3 (depending on location) for single post signs mounted to either bridge railing or outside barrier walls. If the Authority specifies designs in accordance with the conceptual detail in the Appendix, remove “Index 11871” or “Index 11870” from the description and insert (Special Design).

8.2.6 Crossroad street name signs and Authority logo L-2 mounted to overpassing bridges typically do not require steel support structures but are attached directly to and flush with the girder or parapet wall. When plans specify flush mounting:

- Use pay item number 700-3-ABBC with A=2, BB=applicable SF range and C added at the end to indicate a non-standard pay item number.

- Revise description to read Sign Panel (F&I) (Bridge) (Flush Mount)

8.2.7 Use pay item number 713-1AA-ABC for all PPRT pavement markings.

- PPRT is high performance tape therefore AA=02.

- Ignore the FDOT list of item number restraints (currently in red) at the beginning of the pay item Details. They do not apply to facilities within the Authority’s jurisdiction.

8.2.8 The latest BOE pay item number for Flexible Tubular Delineators shall be used for roadside delineators.

8.2.9 Surface mounted delineators shall be paid for under the same base number used for roadside delineators followed by an “A”, i.e. 705-11-1A. The description shall read Surface Mounted Delineator (Flat Flexible) (Flexstake).

8.2.10 The 3M Linear Delineation System installed along either barrier wall or guardrail is to be paid under special pay item number 705-11B.

- The description shall read 3M Linear Delineation System.
  - Barrier Wall
  - Guardrail

- Provide a separate line item and quantity per sheet for each type of installation.

- Unit of payment is LF.

8.2.11 A special pay item number has been developed for painting existing overhead sign structure supports. Pay item 560-3 shall be used when painting:

- Existing uprights that remain in place.

- Existing uprights that are relocated.

The description shall read: Existing Overhead Sign Structure Upright Painting and the unit of payment shall be per each (EA). A double column support will count as one (1).

8.2.12 The pay item number for an Option Lane Directional Arrow shall follow the latest BOE format for either thermoplastic pavement markings (711-1A-BCD) or PPRT pre-formed tape (713-1AA-BCD). However since these arrows require more material, the Option Lane arrow shall be a separate line item under the applicable pay item number and subtotaled in the Tabulation. If both types of option lane arrow are specified in the plans, a separate line item shall be used for each.

Chapter 9

General Notes and Pay Item Notes

9.1 The Appendix contains a list of standard signing and pavement marking General and Pay Item Notes developed for use by Consultants on Authority projects.

9.2 Not all notes are applicable to all projects. The Consultant is fully responsible for including, modifying or adding notes as necessary to meet project specific requirements.

9.3 For those notes in the Appendix sheets not applicable to project, the Consultant shall:

- Keep the number the same and revise the note to read “NOT USED”. The end result will be **all notes, used or not used, stay in the same numerical order.**

- Include additional notes deemed necessary by the EOR at the end of the established list.

If two or more consecutive standard notes are “NOT USED” in the project, the Consultant may group them together using the format “Notes XX and XX NOT USED” or “Notes XX thru XX NOT USED”.

9.4 Some General notes contain instructions to the Consultant in bold type and/or parentheses. **The Consultant shall delete this portion of the note**.

9.5 The minimum font size allowed on General Notes sheets shall meet the “desired” English criteria for B-size plans (11” x 17”) as specified in the FDOT CADD Production Handbook.

Chapter 10

Plan View Sheets

Contents

Section 10.1

General Requirements

The plan view sheets shall be prepared in accordance with the most current FDOT Plans Preparation Manual and Design Standards. In addition, the plans shall adhere to the following:

10.1.1 Plan sheets may be "stacked" and shown at a scale no smaller than 1" = 100' (11" x 17") only if the roadway geometry is relatively simple and the signing and pavement marking information will not appear cluttered. Otherwise, signing and pavement marking plan sheets shall match the scale used for the roadway plan sheets with the exception of intersection details. See 10.1.3.

10.1.2 The minimum font size allowed on plan view sheets shall meet the “desired” English criteria for B-size plans (11" x 17") as specified in the FDOT Cadd Production Handbook.

10.1.3 It is necessary to show intersection details at a scale large enough to provide the level of detail required for proper installation. Therefore the minimum allowable scale for plan sheets containing ramp/crossroad intersection details is 1”= 50’ (11” x 17”). Unless prior approval has been obtained from the Authority or the Authority’s GEC, intersection details submitted at a scale smaller than the allowable minimum **will be rejected without review** and will require resubmittal.

10.1.4 Existing topography, roadway, shoulders, guardrail, curb and gutter, etc. that will no longer be in place once roadway construction is completed shall not be shown.

10.1.5 Sawcut lines through widening areas shall not be shown.

10.1.6 The final roadway configuration including proposed and existing to remain guardrail, curb and gutter, sidewalks, walls, fences (relative to sign placement), R/W and/or LA R/W, etc shall be shown on each sheet.

10.1.7 Walls shall be shown and labeled per type, i.e. sound wall, barrier wall, MSE wall, etc.

10.1.8 Plan sheets for cross streets shall not be inserted between plan sheets for the mainline. Sheets shall be arranged in the following order:

- Mainline

- Ramps
- Cross streets

10.1.9 The same portion of roadway should not be shown on more than one plan sheet if possible. However, if the same portion of roadway must appear on multiple plan sheets, the signing and pavement markings shall be labeled, dimensioned and quantified on **one plan sheet only**.

10.1.10 Match lines with a station **shall be shown on each sheet.** Sheet references (See Sheet S-XX) are required only when sheets are not consecutive.

10.1.11 Plans containing an interchange with an intersecting roadway should show a "key map" on each plan sheet. Plans containing a system to system interchange, an interchange with loop or partial loop ramps and/or containing more than one interchange with an intersecting roadway shall show a "key map" on each plan sheet.

10.1.12 Roadway Lighting

- Proposed and existing to remain light pole symbols within the project limits shall be shown.
- Existing light pole symbols in the vicinity of proposed signing activity beyond the roadway project limits shall be shown. Only the poles near a proposed or relocated assembly are required.
- Pole symbols are to be “screened” or lightened in some way so as not to interfere with signing and pavement marking information.

If, during the course of plans development, the proposed lighting or signing locations change, the Consultants for signing and pavement marking and lighting are responsible for adjusting one or both plan components to remain in conformance with relevant CFX Standards. Close coordination between the designers for both project disciplines is required.

10.1.13 DMS sign structure locations shall be shown for reference only. If, during the course of plans development, the proposed guide signing and/or DMS locations change, the Consultants for both disciplines are responsible for coordinating and adjusting one or both plan components to remain in conformance with relevant CFX Standards.

10.1.14 Notes for physical features common to construction plans and signing and pavement marking plans shall be shown and shall match between both plan

sets. The following geometric data is of particular importance to signing and pavement marking design and shall be shown on each applicable plan sheet.

- Begin and End edge of pavement and median tapers, including station tie(s).
- Begin and End ramp baselines with mainline station equivalents.
- Baseline to Baseline intersection equations.
- Baseline station equations.
- Mainline and ramp toll plaza stations at begin/end of concrete plaza deck.

Begin/End designations shall follow the direction of stationing, not direction of travel.

10.1.15 All baselines and roadways shall be labeled on each sheet.

10.1.16 The centerline of each toll plaza shall be shown with the station(s) noted. The centerline station(s) shall match the Toll Plaza Construction Plans.

10.1.17 **All** existing guide signs and standard signs shall be shown on the plan sheets along with the proposed disposition (i.e. remove, relocate, etc.).

10.1.18 Existing and proposed signing, including panel face and structure symbol, shall be shown on the applicable plan view sheets. Proposed signing shall not be shown on reduced scale overall project layout sheets. Consultants shall not use a copy of the CSP to show signing within or beyond project roadway construction limits.

10.1.19 **All station ties for signing and pavement markings shall be rounded to the nearest half-foot. If construction plans contain separate baselines for each direction of travel, station ties shall be measured from the baseline for the applicable direction of travel.**

10.1.20 Any buried or overhead utilities that potentially conflict with sign structures (multi-post and overhead mounted) shall be shown and labeled only in the vicinity of the sign structure. Utilities shall not be shown through the entire limits of the signing and pavement marking project.

10.1.21 The Authority's Fiber Optic Network shall be shown and labeled on all signing and pavement marking sheets throughout the project limits.

10.1.22 Some Authority projects widen, extend or abut an existing Authority facility and Consultants choose to develop a separate baseline than that used in original construction plans. In such cases, the Consultant shall provide a station equation at the beginning and end of said project that relates the new baseline of construction to the original.

Section 10.2

Additional Signing Requirements

10.2.1 Sign Panels

A graphic representation of each panel face regardless of type or disposition shall be shown on the correct side of the roadway and oriented to face oncoming traffic.

If a proposed sign assembly is comprised of multiple panels, the representations are to be arranged matching the desired installation configuration. This is particularly important for route marker assemblies and other instances where regulatory/warning signs are mounted on a common post.

10.2.2 A single unique structure number shall be assigned to each overhead and multi-post sign assembly. The Authority prefers the following format.

- OT-XX for overhead truss (half or full span).
- OC-XX for overhead cantilever.
- BM-XX for bridge mount.
- GM-XX for multi-post ground mount.

10.2.3 Each special design panel shall be assigned a unique sign number. The same panel number may be used for identical signs to be installed on more than one structure. For example, truss OT-6 could support signs 100, 102, 103 while cantilever OC-10 could support sign 100.

10.2.4 The following information shall be shown in the vicinity of each overhead and multi-post guide sign assembly:

- Unique structure number.
- Sign panel number(s). Panel sizes shall not be included.
- Pay item number.
- Station location.

10.2.5 The plan view sheets shall show the following information for all ground mounted sign assemblies, single and multi-post:

- Standard code or special design sign number.
- Size of each panel (only required for signs having a standard FHWA or FDOT code).
- Pay item number.
- Station location.

Standard codes and sizes (R2-1 (48” x 60”), W4-2 (48” x 48”), etc.) shall not be shown on the Tabulation sheet(s).

Section 10.3

Additional Pavement Marking Requirements

The pavement marking requirements specified below apply to roadway and toll plaza striping plans:

10.3.1 All pavement markings shall be labeled on each plan view sheet with the following information:

- Color and width.
- Spacing when applicable.
- Station to station limits.

10.3.2 The following RPM information shall be shown on the plan view sheets:

- Color and Type: Bidirectional may be specified by abbreviations such as YY, YR, WR, etc. Monodirectional may be specified by abbreviations such as MDW or MDY provided a legend is included in the plans.
- Spacing.
- Station to station limits.

10.3.3 Roadside as well as surface mounted delineators shall be labeled on each applicable plan view sheet with the following information:

- Color and Type: Both may be specified by abbreviations, such as SWPMD, provided a legend is included in the plans.
- Spacing.
- Station to station limits.
    - There is no need to calculate the exact station of each delineator. The ***limits*** should be a reflection of the spacing criteria in 7.2.10. Using a parallel exit ramp as an example:

- Say the taper from the mainline begins at 282+94 and ends at 286+54. The 40' OC delineators ***limits*** would be 282+94 to 286+54.

- The full width decel lane is from 286+54 to 295+20. The 300' OC delineator ***limits*** would be 286+54 to 295+20.

10.3.4 If crosswalks or stop bars appear more than once per sheet, a typical (TYP) label may be used in lieu of providing a callout for each location on a single sheet.

10.3.5 Radii labels are required for all dotted lines used as turning guide lines.

10.3.6 Station ties shall be shown at:

- The beginning and end of each lane line.

- Each point where a lane line is changed from one striping pattern or material to another, i.e. from a skip to a solid, from an 8" white to a 9" Contrast, from PPRT to thermoplastic, etc.

- All lane and edge line begin and end taper points.

- Both ends of all stripe line break points, i.e. when lane lines are broken through intersections, when edge lines are broken at cross roads, etc.

- The theoretical gore for entrance / exit ramps.

- All stop bars (one at each end only if stop bar is skewed).

- All crosswalks (one at each end of the same line only if skewed). Only one line needs station ties provided width of crosswalk is specified either by dimension per location (TYP if all the same on a sheet) or by a General Note added to plans by the Consultant.

- "Middle" set(s) of pavement arrows and messages in turn lanes (first and last sets are specified in FDOT Design Standards).

- Each merge arrow and pavement message set.

Only one station tie is required per pavement arrow/message set.

Offsets are only needed at station ties where the lateral location of the tied point cannot be readily determined from dimensions based on a fixed roadway feature, i.e. edge of roadway, edge of median, etc.

10.3.7 Channelization islands

The Consultant shall provide the following information (as applicable) on all sides of a striped island to enable proper installation.

- Radii.
- Station ties.
- Lane width dimensions.
- Offsets when needed.

At times a radius is too large for practical field application. In such cases the Consultant shall provide sufficient dimensions to ensure the travel lane(s) remain uniform.

Islands formed solely with striping material shall be 8” white on all sides.

Edge striping around raised concrete or grassed channelization islands shall be 8” white on all sides regardless of island size.

10.3.8 Lane Transition Striping

The Consultant shall provide a station tie and lane width dimension at each end of both tapers when the transition occurs through a tangent segment of roadway.

Intermediate station ties with transition striping widths (i.e., distance from edge of roadway to transition edge line) shall be provided under the following conditions in order to provide a uniform travel lane width.

- Transition occurs through a horizontal curve.
- Tapers are unusually long.

10.3.9 Lane width dimensions shall be shown at:

- Each end of every plan sheet.
- The beginning of each stripe type.
- Theoretical gores including mainline exit/entrance ramps and channelization islands at ramp/crossroad termini.

Individual dimensions shall be shown for all lanes. **Total pavement width in lieu of individual lane widths is not acceptable.**

10.3.10 Spacing for 18" white and yellow diagonal striping and painted gore areas shall be shown at each location. Painted gore striping shall be spaced 20' OC. Spacing for transitional striping shall adhere to criteria in FDOT Design Standard 17346.

10.3.11 When proposed pavement markings cross jurisdictional boundaries, the plans shall clearly indicate where the installation of Authority preferred materials begin/end and the installation of FDOT, county or municipal materials begin/end. Clarity is particularly important when multiple jurisdictions are show on the same sheet(s).

Chapter 11

Guide Sign Worksheets

Contents

Section 11.1

General Format

Guide sign worksheets shall be provided for all proposed and known future permanent panels.

When appropriate, worksheet details for guide signs needed during construction are also required and shall be included in the TCP plans with the Construction Guide Signing Plans. See Section 4.7.

11.1.1 Number of details per worksheet:

- Worksheets shall contain one (1) guide sign per sheet with enlarged sign graphic for clarity when the design is for a complex panel. APL, APLM, diagrammatic and other complex sign designs qualify for single worksheet treatment. See the Appendix for examples.

- Worksheets should contain four (4) panel details per sheet when designs are for less complicated guide signs. See preferred format in the Appendix.

11.1.2 Route shields, arrows and any other symbols shall be shown in the horizontal copy spacing on the same line with associated words. **Using X / Y dimensions (GuidSIGN default) to locate these elements is not acceptable.**

11.1.3 <u>Horizontal copy spacing:</u>

- **Should be shown as total individual word l**engths or may be shown as individual letter widths.

- Shall include individual values for both side margins.

- Shall include individual values for the space between words, words and route shields, words and arrows, etc.

When the total copy length is provided, the Consultant is responsible for ensuring the total length shown is equal to the addition of the dimensions for letters or words plus interword spacing.

If the spacing is submitted as cumulative values from one side of the panel to the other, the worksheets will be rejected without review and a resubmittal will be required. **No exceptions allowed.**

11.1.4 Each line of copy within a sign shall appear on the same line in the horizontal copy spacing portion of the panel layout design regardless of ANY computer program default format. For example,"1/2 MILE" shall not be designed with the fraction on one line and the word MILE on another. **No exceptions to this criterion are allowed**.

11.1.5 Horizontal and vertical margin spacing (margin plus border) shall be shown separately, i.e. not combined with adjacent dimensions.

11.1.6 The minimum allowable font size for dimensions, notes, etc shall meet the "desired" English criteria for B-size plans (11" x 17") as specified in the FDOT CADD Production Handbook. **Note that vertical and horizontal dimensions shall meet or exceed this requirement regardless of computer program default.** Manual manipulation of the computer program may be necessary for compliance to this criterion.

11.1.7 All panel graphics shall be large enough such that the copy and vertical dimensions are clearly legible regardless of the size normally produced by a computerized program. Conformance to this criterion may require manual manipulation of the panel graphic.

11.1.8 <u>Permanent or temporary auxiliary panels:</u>

- May be detailed separately or included in the detail for the main panel.
- Overall height of an auxiliary panel shall not be included in the height of the main panel.
- Shall be fully dimensioned regardless of detail location.
- Shall provide all information for fabrication, i.e., sheeting, colors, border width, radius, etc.

11.1.9 Panel numbers shall be listed in the title block of each sheet.

11.1.10 The following note shall appear on each sheet: "Width - horizontal spacing dimensions are in inches. End dimensions include border width and margin."

Section 11.2

Required Detail Information

11.2.1 Each panel detail shall contain the following basic information (typically in tabular format or GuidSIGN "Report"). If auxiliary panels are included in the same design detail as the main panel, all elements listed below shall be shown for each.

- Unique sign number
- Quantity
- Width
- Height
- Border Width, Radii and Inset (if any)
- Background Color(s) (list all)
- Legend and Border Color(s) (list all)
- Sheeting (note as **DG3** not "Reflective")
- Arrow Size (tip to tale; barb to barb) and Angle
- Station(s) and unique structure numbers

11.2.2 Each copy series shall be labeled on each panel design. This information may either appear in the horizontal or vertical copy spacing or noted in the sign graphic area.

- Only the upper case letter height is specified when using ClearView.
- Upper case and lower case letter height shall be specified when using Standard Series EM.

11.2.3 The details for Interchange Sequence and Distance panels shall show vertical centerlines through each column of whole numbers and/or fractions along with column labels as an additional clarification for the panel fabricator. See the Appendix for examples.

11.2.4 The offset from the edge of travel and support design data (i.e. column size and estimated average length) may be shown with each applicable panel designed for a multi-post assembly. However, this information may also be shown in tabular format along with the same data for multi-post standard signs. See the example in the Appendix.

11.2.5 If a panel contains a horizontal and/or vertical divisional line separating two background colors, the divisional line shall be shown separately in the vertical and horizontal copy spacing (i.e., not combined with the space above, below or on each side). The color and width of divisional lines shall be specified by a separate callout in the panel graphic area of the detail. See the Appendix for examples.

11.2.6 Fractions

Overall height and width shall be shown in the vertical dimensions and horizontal copy spacing (or noted in the sign graphic area if necessary).

Overall height is **not the same** as the size / series of the individual numerals. For example, if the vertical dimension for fraction 1/2 reads 15” CV4W, the dimension **is not correct**. The vertical dimension is simply 15”. A label shall be added reading “10” CV4W Numerals” when the distance does not contain a whole number.

The label shall read “10” CV4W Numerals in Fraction” when the distance contains both a whole number and fraction. (**Consultant shall revise size and series per panel design**.)

11.2.7 Detail Notes

The following notes shall appear on **each** applicable panel detail. It is the responsibility of the Consultant to include the appropriate dimensions when represented by XX.

- Green 30" x 30" airplane symbol shall be centered within 34" x 34" white background. Airport symbol shall not have a border and background shall have square corners. **(Consultant shall revise the size of the airport symbol and background as necessary.)**

- Panel has been designed to accommodate future copy.

- Horizontal spacing between black letters on yellow background has been increased by 10%. **(Consultant shall revise negative contrast colors as necessary.)**

- Arrow size: 35” x 22.25”, 45 degree **(Consultants: This note applies to slanted arrows only; size and degree to be revised as necessary per design).**

- Vertical and horizontal dimensions shown for FTP-18-06 are the size of the yellow rectangular background. The FTP-18-06 shield shall be XX" x XX".

- Fabricator shall adjust spacing such that numerals and fractions are vertically centered about the widest in each column. C/L’s are not part of the sign face. (**Consultant: This note applies to interchange sequence and distance signs.**)

- Length of hyphen to be XX".

Chapter 12

Guide Sign Cross Sections

Contents

Section 12.1

General Requirements

See the Appendix for examples of typical cross sections for both full span and cantilever sign structures. The following is a list of the Authority's specific criteria for use in developing guide sign cross sections.

12.1.1 Cross sections are required for:

- All proposed overhead sign structures.
- Existing sign structures, including those outside the limits of roadway construction, when proposed panels are lane specific or when relocating existing lane specific signs along the truss.
- Multi-post signs only when warranted due to unusual or complicated roadway characteristics.

Cross sections are **never** required for full or partial overlays.

12.1.2 Cross sections are optional for the following:

- When proposed signs on existing overhead structures are not lane specific provided panel position along truss can be clearly identified in plans. One option is to include a schematic elevation along with pertinent information in tabular format. See example in the Appendix.
- Multi-post signs through typical roadway section.

12.1.3 Cross sections shall be plotted in accordance with the following:

- Cantilever structure: in the direction facing the panel(s).
- Span structure with static panel(s) over both directions of travel: in the direction of stationing.
- Span structure with static panel(s) over one direction of travel: in direction facing signs(s).
- Span structure with a DMS or a DMS/static combination over one direction of travel: in direction facing the DMS or DMS/static combination.
- Span structure with co-located DMS: in direction of stationing.

12.1.4 The scale shall be 1” = 10’ vertically and 1” = 20’ horizontally (11” x 17”) **regardless of scale used for cross sections in roadway construction plans**. Any proposed variation from the preferred scale shall be approved by the Authority prior to cross section sheet production.

12.1.5 The minimum font size allowed on cross section sheets shall meet the “desired” English criteria for B-size plans (11" x 17") as specified in the FDOT CADD Production Handbook.

12.1.6 The unique structure number(s) shall be shown in each title block.

12.1.7 All dimensions shall be in inches and feet. **No exceptions allowed**.

12.1.8 If the sign structure is to accommodate multi-phased panel configurations, i.e. initial, interim, ultimate, a cross section for each phase is required to clearly identify:

- Required truss length for each phase (see Section 4.5).
- Panel location(s) along the truss.

12.1.9 Drawings shall accurately depict center justification about the cross member of the overall height of both the initial and future main panel(s). Permanent or temporary auxiliary panels shall **not** be considered as part of the main panel height. See 4.6.12 for additional information regarding “overall height”.

12.1.10 A single line shall be shown representing the centerline of the truss with the label “C/L Truss & C/L Panel(s) XX”. The Consultant is to include the correct panel number(s).

12.1.11 Dimensions from the C/L of the truss to the top and bottom of the panel shall be shown under the following conditions.

- When a proposed panel cannot be center justified on an existing structure that warrants a cross section.
- When the overall height of the sign includes an auxiliary panel. See Section 4.6.12 for criteria governing “overall height”.

If a cross section is not warranted, these dimensions shall be clearly identified in plans. One option is to include a schematic elevation along with pertinent information in tabular format. See example in the Appendix.

12.1.12 Each drilled shaft or spread footing and upright shall be shown and drawn to scale, representing the dimensions of each as shown in the structure variables table(s). The full depth of drilled shafts need not be shown.

12.1.13 The elevation at the top of each drilled shaft shall be shown.

12.1.14 Horizontal Clearance (CZ):

- CZ shall be measured from the controlling element to the front of the support. See 4.3.1 for additional criteria.

- Only one controlling element shall govern the CZ for each support. **Do not include more than one CZ dimension per support except as specified below.**

- If the structure is located between two roadways (i.e., mainline / ramp, mainline / frontage road, ramp / frontage road, etc.) the **CZ distance is required from both facilities**. Dimensions shall be shown from the controlling element of each roadway to the front of the support (in direction approaching upright on both roadways).

12.1.15 The vertical clearance (VC) for structures containing more than one panel shall only be shown to the single controlling sign panel, either initial or future. VC measurements shall not be provided for any other panels. If a full span structure contains panels facing both directions of travel, there shall be only one panel (regardless of direction) controlling the VC for the entire structure. **Do not show a VC dimension for each direction of travel.** See Section 4.3 for additional criteria.

12.1.16 The elevation shall be provided at the point on the roadway from which the VC is measured.

12.1.17 Future widening

- The VC shall be based on future widening when known and applicable. An approximate elevation shall be shown to the nearest tenth of a foot. Add appropriate note(s) as shown in Sections 12.2.4 and 12.3.3.

- When future widening will change the outside edge of pavement, an approximate elevation shall be shown to the nearest tenth of a foot.

- The future roadway template should be shown when a support is located to accommodate widening when future slopes may significantly impact top

of foundation elevation. The Consultant shall notify and obtain design direction from the Authority in all such cases.

- Future roadway templates, when needed, shall be shaded back such that initial roadway section is not obscured.

12.1.18 When future panels are shown on the cross sections or if initial panels are not to have lighting at time of construction, add note(s) to each applicable sheet as shown in Sections 12.2.4 and 12.3.3. **Consultant to ensure VC shown on cross section will provide 17'-6" minimum to bottom of future luminaires for structural design purposes.**

12.1.19 When panels are lane specific and the location of individual lanes cannot be clearly identified, i.e. through areas of variable pavement width, lane transitions, striped gores, etc. lane line locations shall be shown.

12.1.20 Required sign panel information (applies to single and multi-phased panel configurations):

- All signs fully dimensioned, including auxiliary panels.
- Sign number(s).
- A graphic representation of each panel (can be shown on the structure or elsewhere on the sheet).

12.1.21 Additional required information

- All underground utilities, existing to remain, to be relocated and proposed (use Fiber Optic Network and Utility Adjustment plans).
- Overhead utilities that may impact construction.
- Right-of-way and fence locations if within the vicinity of the sign panel or support (very important on crossroads).
- Guardrail.
- All walls (barrier, retaining, sound, etc.).

Section 12.2

Span Truss

12.2.1 Roadway dimensions

- The roadway shall be fully dimensioned from the front of left and right supports.
- Outside shoulder width shall not be specified. The appropriate dimension is:
  - **Either** from the outside edge of travel to the front of the support.
  - **Or** from the outside edge of travel to the controlling element as defined in Section 4.3.1.
- Travel lanes may be shown as a single dimension (i.e. 24’, 36’, 48’, etc) when lane widths can be easily determined. Specific widths shall be specified for lanes through variable lane width areas.
- Median width shall not be shown as a single dimension between directions of travel. The appropriate dimensions are from the C/L Construction (or B/L Survey) to the near edge of travel regardless of full depth construction limits.

12.2.2 Truss dimensions

- Truss shall be fully dimensioned and shall include all of the following:
  - Dimensions from the front of each support to the near edge of closest panel.
  - Overall width and depth of each panel including auxiliary signs.
  - The space between main panels.

Do not show an overall truss length dimension between front of left and right supports.

12.2.3 When the truss is to accommodate panel(s) over only one direction of travel, a future panel, including exit number, shall be shown over the opposite roadway for the purpose of providing maximum flexibility for future use.

12.2.4 Notes for full or half span structures

- Required notes:
  - "Prior to drilled shaft or spread footing installations, both the contractor and CEI shall confirm that all locations and elevations will correctly accommodate the clearances and the total length of the truss as shown on the structural design sheet entitled Table of Span Truss Structure Variables and corresponding shop drawings. **(Consultant to revise sheet title as necessary.)**
  - Sign structure design was based on Parts A) through E) of General Note 18.
  - For structures containing toll plaza single line DMS components: "The DMS sign shall be mounted to the front vertical plane of the truss tri-chord." *Note does not apply and shall not be added when the truss contains a DMS in both directions of travel.*
- Additional notes when applicable:
  - 17'-6" minimum vertical clearance set from elevation of future widening. **(Consultant to revise VC when truss is to accommodate either a single or multi-line DMS.)**
  - Truss designed to accommodate future panels 20'-0" x 15'-0" and 8'-0" x 2'-6". **(Consultant to revise dimensions as necessary.)**
  - Vertical clearance has been increased to accommodate future luminaires.

Section 12.3

Cantilever Truss

12.3.1 The **only** roadway dimension to be shown shall be the dimension from the controlling element to the front of the support. The roadway portion of the cross section shall NOT be fully dimensioned.

12.3.2 Truss dimensions

- Truss shall be fully dimensioned and shall include all of the following:
  - Dimension from the front of support to the near edge of panel.
  - Overall width and depth of panel(s) including auxiliary signs.
  - The space between main panels when applicable.

Do not show an overall truss length dimension from front of support to end of panel(s).

12.3.3 Notes for cantilever structures

- Required notes
  - Sign structure design was based on Parts A) through E) of General Note 18.
  - Prior to drilled shaft or spread footing installations, both the contractor and CEI shall confirm that all locations and elevations will correctly accommodate the clearances and the total length of the truss as shown on the structural design sheet entitled Table of Cantilever Sign Structure Variables and corresponding shop drawings. **(Consultant to revise sheet title as necessary.)**
- Additional notes when applicable
  - 17’-6” minimum vertical clearance set from elevation of future widening. **(Consultant to revise VC as applicable for DMS.)**
  - Vertical clearance has been increased to accommodate future luminaires.

Chapter 13

Toll Plaza Signing

Contents

Section 13.1

Introduction

Signing criteria has been developed to accommodate the varying operations at mainline and ramp toll plazas. All mainline plazas operate as open road toll (ORT) plazas. Ramp plazas are primarily two lanes and typically include an automatic coin machine (ACM) lane to the left and a dedicated E-PASS lane to the right. Although most two lane ramp plazas are equipped for manual toll collection they are not currently manned. Single lane ramp plazas are ACM with E-PASS acceptance.

ORT plazas are designed such that the E-PASS lanes in both directions of travel continue as an uninterrupted through movement along the mainline while the cash customers are diverted to a canopied toll plaza for each direction of travel. A “typical” ORT plaza is configured such that the toll gantry and cash payment toll plaza canopies are at the same mainline station. A “split” ORT plaza is configured such that the toll gantry and toll plaza canopy for each direction of travel are at different locations along the mainline.

The Authority has developed basic standards for approach, departure, canopy and island signing for both mainline and ramp plazas. The roadway geometry, the plaza configuration (i.e., typical or split) and the proximity of entrance and/or exit ramps are major factors in determining the appropriate signing and pavement marking plan. Generic signing and pavement marking standards for mainline ORT and ramp toll plazas are included in the Appendix.

Approach signing for mainline and ramp toll plazas will be included in the overall Roadway CSP provided by the Authority or the Authority’s GEC. As with all roadway guide signing, the Consultant will be responsible for adjusting the locations of overhead structures based on the final roadway design. Standard toll plaza related panel designs have been developed for use throughout the Authority’s system. Conceptual details for mainline and ramp toll plaza related signs are included in the Appendix for review, revision as necessary and insertion into the plans. Only panels specific to the project are to be included in the plans. Should there be a need for a panel design not currently included in the Standards it will be provided by the Authority or the Authority’s GEC.

If the CSP specifies a panel that is only <u>slightly</u> different from a conceptual detail in the Appendix, it will be the Consultant’s responsibility to revise the conceptual detail accordingly (does not apply to DMS). However, the overall conceptual panel size shall not change without prior approval from the Authority. The Consultant shall confirm that selected panels and proposed revisions are appropriate prior to beginning structural design activities.

Section 13.2

General Criteria

The following criteria is a listing of common elements the Authority has developed in an effort to make toll plaza signing as consistent as possible throughout the system. It is the Consultant's responsibility to adapt these criteria to project specific needs. However, any adjustment to the basic signing standards shall first be approved by the Authority.

13.2.1 All major advance signing for mainline toll facilities shall be mounted overhead.

13.2.2 Guide signs for tolled exit ramps

- CASH TOLL .XX or CASH TOLL $X.XX shall be shown on all advance guide signs as well as the exit direction panel. See Chapter 4 for additional information.
- E-PASS Logo EP-7 shall be attached to the top of all advance guide signs and the exit direction panel. See Chapter 4 and the Appendix for additional details.
- Do not include toll rate information on interchange sequence signs.

13.2.3 Dollar symbol ($)

If the toll amount is one dollar or more the sign shall include the dollar symbol.

- The dollar symbol shall not be included in:
  - Toll rates less than one dollar.
  - Toll Schedule signs regardless of toll rates.

13.2.4 There may be additional toll plaza related signing needed to address a unique issue. The Authority will determine the need for non-typical signing on a per case basis and the panel detail(s) will be provided by the Authority or the Authority's GEC.

13.2.5 The Authority will determine if the existing mainline toll plaza parking lot signs are to be replaced on a per case basis. If replacement is required, the Consultant shall include all necessary details in the Roadway Signing and Pavement Marking Plans. Conceptual panel designs are included in the Appendix.

Section 13.3

Mainline ORT Plaza Signing

13.3.1 Combinations of diagrammatic, static and DMS/static panels are used for advance toll plaza signage. The configuration at each location should be as shown in the Appendix, and as listed below. Conceptual designs for all approach panels are provided in the Appendix. It is the Consultant's responsibility to review and revise as necessary prior to including in the plans.

13.3.2 Major overhead advance signs are as follows:

- PREPAID TOLLS ONLY / E-PASS KEEP LEFT and TOLL PLAZA 1 MILE (measured from centerline of plaza).
    - The TOLL PLAZA 1 MILE sign shall contain the cash toll rate for a 2-axle vehicle.
- PREPAID TOLLS ONLY / E-PASS with single line Dynamic Message Sign (DMS) and diagrammatic at 1/2 mile, measured from centerline of plaza. The location shall be adjusted as necessary to ensure the arrows on the diagrammatic panel are correctly positioned over the applicable lanes.
- PREPAID TOLLS ONLY / E-PASS with DMS and diagrammatic at the theoretical gore separating the E-PASS ORT lanes from the cash toll plaza lanes.
- STOP AHEAD PAY TOLL located 500' to 700' from the centerline of the toll plaza adjacent to cash lanes.

The locations of the 1 MILE and 1/2 MILE assemblies may vary but shall be limited to 1/4 mile in each direction. Deviations greater than 1/4 mile require approval from the Authority prior to proceeding with design efforts.

13.3.3 A multi-post mounted CASH TOLL SCHEDULE sign is required for the cash toll plaza. The preferred location is 150' to 300' upstream from the centerline of the plaza.

13.3.4 A single post mounted WIDE LOAD KEEP RIGHT sign is required for the cash toll plaza. The location varies but should generally be 150' to 200' downstream (in direction of travel) from the STOP AHEAD PAY TOLL overhead assembly.

13.3.5 Special DO NOT STOP signs shall be:

- Installed in the median between the ORT E-PASS lanes in each direction of travel.
- Single post mounted.
- 48” x 54” when ground mounted.
- 36” x 48” when mounted to the top of a median barrier wall.

Two assemblies are required in each direction. Locations vary; however in general:

- The primary assembly shall be at the leading edge of the toll gantry.
- The secondary assembly should be placed 400’ to 500’ upstream from the primary assembly, depending on other roadway elements.

Locations of all DO NOT STOP assemblies shall be coordinated with Landscape Plans, if any.

13.3.6 Plaza departure signing shall include:

- Merge warning signs for traffic departing the plaza.
- A speed limit sign located approximately 500’ from the end of the taper to mainline lanes.

Section 13.4

Ramp Toll Plaza Signing

As with mainline toll plazas, the Authority has developed standard approach signing for ramp toll facilities in an effort to make ramp plaza signing uniform throughout the system. The following criteria illustrate the common elements. It is the Consultant's responsibility to adapt these criteria to project specific needs. However, any adjustment to the basic signing standards shall first be approved by the Authority. A generic signing plan for two lane exit and entrance ramps with a dedicated E-PASS lane is included in the Appendix. Conceptual panel designs are included in the Appendix.

13.4.1 All entrance ramps shall have either one or two multi-post assemblies with a single panel reading CASH .XX KEEP LEFT/E-PASS KEEP RIGHT. Sign(s) shall be installed near the ramp terminus with the cross street.

13.4.2 Single and multi-lane entrance and exit ramps may require a single post mounted REDUCE SPEED sign depending on the distance from the ramp terminus to the toll plaza. Dual installations are required on multi-lane ramps when applicable.

13.4.3 The PAY TOLL panel shall be included on the REDUCE SPEED assembly when needed on single lane ramps. The PAY TOLL panel shall not be included on the assembly if needed for a two lane ramp with a dedicated E-PASS lane.

13.4.4 The following multi-post signs shall be used on entrance and exit ramps only when the sight distance to canopy or truss mounted signs is limited, i.e., loop ramp, over-passing bridge, etc., or **as directed by the Authority**:

- E-PASS ONLY KEEP RIGHT.
- CASH LANE .XX KEEP LEFT.

These assemblies shall be located directly opposite each other, adjacent to the applicable lanes, and in advance of (in direction of travel) the roadway feature impacting sight distance.

13.4.5 Multi-lane ramp toll plazas with a dedicated E-PASS lane shall require merge sign (W4-2) for traffic departing the plaza. Two single W4-2 (right lane drop) or two sets of W4-2 (left lane drop) assemblies are to be specified when possible.

Section 13.5

Canopy Signing

13.5.1 The Authority uses a combination of canopy signing that consists of static (fixed) panels and changeable message signs (CMS) on mainline facilities depending on the plaza lane configuration and/or toll collection operation. See the Appendix for conceptual details.

13.5.2 At mainline toll plazas, the static signs and/or CMS will be mounted to the canopy fascia.

13.5.3 At ramp toll facilities, the signing will be mounted on a sign truss.

Static panels are installed over the cash lane and EPASS ONLY lane.

The static sign shall be designed such that:

- The 12’ x 5’ sign face is centered within a flat sheet of aluminum measuring 14’ 4” x 5’ 6”. Direct application is preferred.
- The sign face has corner radii per plans detail.
- The corners of the aluminum are square.
- The blank aluminum on all sides of the sign face shall be painted to match the truss color.

A conceptual detail is provided in the Appendix.

13.5.4 Canopy signing is generally included as part of the Toll Plaza plans. However, the Authority may direct that the canopy signing be included in the Roadway Signing and Pavement Marking plans. In either case, the Authority will determine the type(s) of panels to be installed at each plaza and will advise the Consultant accordingly.

13.5.5 Static and/or CMS canopy signs will be a combination of the following:

- EXACT COINS.
- CHANGE/RECEIPTS (with booth symbol).
- E-PASS ONLY (with E-PASS logo).

13.5.6 All canopy signs, regardless of type or mounting location, shall be 12'-0" x 5'-0".

Section 13.6

Interior Plaza Signing

13.6.1 There are three (3) standard signs installed on the barrier islands within a mainline or ramp toll plaza. In addition, there is one (1) standard sign installed on the same post as the electronic toll indicator. Each panel listed below shall be installed as viewed in the direction of travel. A generic detail showing the location of island signs is included in the Appendix as well as conceptual panel details.

All panels mounted flush with the gatorhead (face) shall not extend beyond the beginning of the beveled edge along the sides and top of the gatorhead. The Consultant shall adjust the overall panel width(s) and/or height(s) provided in the Appendix as necessary to meet this criterion. Coordination with the toll plaza designer will be required. **No exceptions allowed.**

- Mainline:
  - WATCH FOR PEDESTRIANS mounted flush on the gatorhead (face) of all islands regardless of toll collection operation.
  - PAY TOLL mounted flush on the gatorhead above the WATCH FOR PEDESTRIANS panel. PAY TOLL is only installed on islands for cash payment lanes.
- Ramp: WATCH FOR PEDESTRIANS mounted flush on the gatorhead (face) of all islands regardless of toll collection operation.
- Mainline and ramp: STAY IN VEHICLE location is dependent on toll lane operation.
  - These signs shall be white letters and border on a red background.
  - Manned booth (MB) lanes: locate just below the attendant door.
  - Automatic coin machine (ACM) lanes: locate just above the coin basket on the ACM.
  - 3M Company VHB tape shall be used for installation on booths or ACMs.

- In lanes capable of operating in both modes of payment, the sign shall be located on the booth door and the ACM.

- Mainline and ramp: WAIT FOR GREEN mounted on the same post with the electronic toll indicator. The WAIT FOR GREEN sign shall not be installed on islands capable of dedicated E-PASS lane operation.

There may be additional panels installed on the barrier islands depending on the overall design of the toll plaza. The need for these particular signs will be determined by the Authority on a per case basis.

13.6.2 Toll Attendant Warning Signs are:

- For use by toll attendants when crossing from one island to another.

- Placed at strategic locations throughout the plaza for optimum visibility by the attendants.

- Generally mounted flush to the islands (facing attendants ascending stairs) and/or inside the stairwell when applicable.

Sign TA-1 shall also be specified as a single post mounted assembly located in the vicinity of the crossing from the Administration Building to the nearest island. The sign shall be oriented such that it is clearly visible by the pedestrian yet does not obstruct the pedestrian's view of oncoming traffic.

13.6.3 DO NOT STOP PROCEED AHEAD is:

- Used at **all full time dedicated E-PASS lanes** in an effort to prevent customers from stopping or making unsafe maneuvers.

- Generally a single post assembly mounted to the top of the barrier island or slab.

- In some cases mounted directly to the side of a booth in place of a coin basket.

13.6.4 Interior plaza signing is generally included in the Toll Plaza plans. However, occasionally this signing activity is incorporated into the Roadway Signing and Pavement Marking plans at the direction of the Authority or the Authority's GEC.

Chapter 14

Toll Plaza Pavement Markings

Content

Section 14.1

Introduction

In order to help guide the toll plaza customer into the proper lane, it is essential that pavement markings in and around toll facilities be designed as uniformly as possible throughout the system. Typical pavement marking "footprints" or standards are included in the Appendix. However, roadway pavement markings on the approach to and the departure from a toll facility will vary slightly from plaza to plaza. The size of the plaza, the roadway geometry, and the proximity of entrance and/or exit ramps are all major factors in determining the most effective variation of the typical "footprint" to use at a particular toll facility. The Consultant is responsible for adapting the appropriate "footprint" to project specific needs. However, all proposed adjustments to the basic standards are subject to approval by the Authority.

In addition, the conceptual Toll Plaza Pavement Marking Details, shown in the Appendix are intended to aid the Consultant in design issues specific to the Authority's toll facilities. All conceptual details may not be applicable to all toll plazas. Appropriate conceptual details shall be reviewed and revised as necessary by the Consultant prior to including in the construction plans.

Section 14.2

General Criteria

The criteria contained in this Chapter will apply to mainline as well as ramp toll plaza pavement markings.

Toll plaza pavement marking plans may be divided between the Roadway and Toll Plaza projects or solely included in one or the other. The Authority or the Authority's GEC will provide direction to the roadway and toll plaza Consultants.

14.2.1 When toll plaza striping is divided between the roadway and the toll plaza construction plans:

- The limits of the striping shall be clearly defined in each set of plans.
- Coordination between the Consultants for both projects shall be required.
- When striped gores extend beyond the plaza concrete deck, the entire length of the striped gore is typically included in the Toll Plaza Plans. The gore striping shall be included in a single construction plan set.

14.2.2 Mainline parking lots:

- The Authority will determine if the existing mainline toll plaza parking lot is to be re-striped on a per case basis.
- All mainline parking lot striping material shall be thermoplastic. An example is included in the Appendix.

14.2.3 The dedicated E-PASS lane shall be clearly striped as the through movement in the departure direction from ramp facilities.

14.2.4 E-PASS ONLY pavement messages shall only be installed in ramp plaza dedicated E-PASS lanes.

14.2.5 All RPMs through a toll plaza shall:

- Be placed "inboard" of the associated lane or edge line (i.e. away from traffic) through the limits of the concrete plaza deck.
- Be placed along 12” solid lane lines (approaching ramp plazas) in double rows and specified as such in the plans.
- Not be placed within plaza walkway areas.

The Consultant shall ensure plans clearly address RPM placement per above criteria.

14.2.6 Striped gores for cash and E-PASS transaction lanes (mainline and ramp) shall:

- Be a total of 30' in length
- Consist of 8" edge lines with Bi-Directional White/Red (WR) RPMs spaced at 9' on center
- Begin even with the end of the impact attenuator.
- Shall not contain 18” chevron striping.

Section 14.3

Mainline ORT Plaza Pavement Markings

An example of typical pavement markings for ORT lane toll plazas is included in the Appendix. Key elements to be included in plans are as follows:

14.3.1 ORT striping shall include a solid line to separate each of the E-PASS ORT lanes. The line(s) shall:

- Be 9" Contrast Black/White with a double row of WR RPMs, 40' OC
- Begin 300' in advance of the centerline of the overhead gantry (in direction of travel).
- End approximately 50’ downstream of the gantry centerline.

14.3.2 Cash lane approach striping shall:

- Consist of a solid line that begins/ends 300’ from the mainline theoretical gore between cash and E-PASS lanes and extends approximately 200’ downstream from the same gore.
- Consist of skip striping approaching each cash lane that begins/ends approximately 300' from the theoretical gore of the toll island.
- Vary in overall length depending on actual geometry.

Lane widths will vary but shall never be less than 12’ and should not exceed 18’.

Each toll island should have a defined approach lane (skip lane line). See typical pavement marking plan in the Appendix.

14.3.3 Cash lane departure striping

Only one defined lane is striped departing the plaza; typically the left most toll lane. Striping shall be 9” contrast Black/White skip striping (10’-30’) and begin/end approximately 200' from the end of the inside toll island, i.e., the island closest to the ORT lanes.

Merge pavement arrows and messages shall be provided for the remaining lanes.

Right side (in direction of travel) merge / transition striping (8"/18") may be required depending on actual geometry.

Section 14.4

Ramp Plaza Pavement Markings

Pavement markings for single lane ramp plazas shall follow the applicable items noted in this chapter, under Section 14.2, General Criteria.

The right lane of a multi-lane ramp plaza will be dedicated E-PASS. A typical pavement marking plan is included in the Appendix. A wide range of variables influence ramp geometry as well as the plaza location along the ramp. The following criteria will apply in most cases; however, it is the Consultant's responsibility to adjust the pavement marking criteria to suit project specific needs.

14.4.1 Special E-PASS striping shall: begin approximately 125' in advance of the gore.

- The first 75'+/- (in the direction of travel) shall be 12" white 3'-12' skip striping with WR RPMs, 15' OC.
- The remaining 50' +/- shall be 12" solid white with WR RPMs 20' OC, double row from the end of the skip striping to the beginning of the gore.

14.4.2 A minimum of two "E-PASS ONLY" pavement message sets is desirable. The minimum spacing is 50' as measured from the top of one set to the bottom of the next.

14.4.3 Departure striping

- The dedicated E-PASS lane shall be clearly marked as the through movement in the departure direction.
- A minimum of two merge pavement message and arrow sets are to be shown for the cash transaction lane.
- If space allows for skip striping, it shall begin at the end of the barrier island. Skip striping shall not extend to taper.

Chapter 15

All Electronic Toll Facility Signing

Contents

Section 15.1

Introduction

All electronic tolling (AET) facilities provide for toll collection via prepaid transponder accounts or by license plate identification and subsequent billing. Criteria and standards have been developed for signing unique to AET facilities.

The Authority has developed basic standards for mainline guide signs approaching the toll collection point or gantry as well as for crossroad signing approaching an interchange. Conceptual details are included in the Appendix. Only panels specific to the project are to be included in the plans.

Approach signing for mainline gantries and along crossroads will be included in the overall Roadway CSP provided by the Authority or the Authority's GEC. As with all roadway guide signing, the Consultant will be responsible for adjusting the locations of sign structures based on the final roadway design. Should there be a need for an AET related panel design not currently included in the Guidelines it will be provided by the Authority.

If the CSP specifies a panel that is only slightly different from a conceptual detail in the Appendix, it will be the Consultant's responsibility to revise the conceptual detail accordingly. However, the overall conceptual panel size shall not change without prior approval from the Authority. The Consultant shall confirm that selected panels and proposed revision(s) are appropriate prior to beginning structural design activities.

Section 15.2

Specific Criteria

The following criteria is a listing of common elements the Authority has developed in an effort to make AET signing as consistent as possible throughout the system. It is the Consultant's responsibility to adapt these criteria to project specific needs. However, any adjustment to the basic signing standards shall first be approved by the Authority.

15.2.1 Mainline gantry

Advance signing for mainline toll gantries shall consist of two multi-post ground mounted assemblies. The panels are as follows (in direction of travel):

- A TOLL COLLECTION information sign shall:
  - Be located 1000' – 1200' from the C/L of the toll gantry.
  - Provide a brief explanation of toll payment methods, i.e. transponders for regular E-PASS users and license plate recognition for users without transponders.
  - Contain a NO CASH black on yellow plaque mounted to the bottom of and matching the width of the main panel.
- A TOLL SCHEDULE sign shall:
  - Be located 300' – 400' prior to the C/L of the toll gantry.
  - Shall contain the E-PASS and TOLL BY PLATE logos.
  - Shall contain the toll rates for both methods of toll payment.
  - Should be no larger than 10'-0" x 18'-0" unless first approved by the Authority.
- Special DO NOT STOP signs shall be:
  - Single post mounted assemblies.
  - Installed at the gantry on both sides of the roadway and in both directions of travel.

- 48” x 54” when ground mounted.
- 36” x 48” when mounted to the top of a median barrier wall.

15.2.2 Crossroad approach signing:

Advance cross road and connections to non tolled facilities shall include the following:

- A banner at the top with the E-PASS logo and the TOLL BY PLATE message.
  - The banner shall be an integral part of the main guide sign.
  - The height shall be 4’-0”.
  - The width shall match the main body of the guide sign but shall not be less than 15’-0”. Increase the green and white portion of the guide sign to 15’-0” if necessary.
- A NO CASH auxiliary plaque attached to the bottom of the guide sign. The plaque shall be 12” EM black letters on yellow background.

15.2.3 There may be additional AET signing needed to address a unique issue. The Authority will determine the need for non-typical signing on a per case basis and the panel detail(s) will be provided by the Authority or the Authority’s GEC.

SIGNING GENERAL NOTES

1. THE CONTRACTOR SHALL PROVIDE SHOP DRAWINGS FOR ALL SIGNS. SHOP DRAWINGS SHALL INCLUDE VHB CALCULATIONS FOR ALL STANDARD AND NON-STANDARD GROUND MOUNTED SIGNS, SINGLE AND MULTI-POST.

2. ALL EXISTING SIGNS ARE TO REMAIN UNLESS OTHERWISE NOTED. ANY SIGNS SCHEDULED TO BE RELOCATED OR TO REMAIN THAT ARE DAMAGED DURING THE CONSTRUCTION PROCESS SHALL BE REPLACED IN KIND AT THE CONTRACTOR'S EXPENSE.

3. CONTRACTOR SHALL MAINTAIN ALL EXISTING HOMELAND SECURITY SHELTER SIGNING THROUGHOUT THE ENTIRE DURATION OF CONSTRUCTION.

4. ALL EXISTING SIGNS ARE TO REMAIN VISIBLE UNTIL SUCH TIME AS THE PROPOSED SIGN ASSEMBLY INSTALLATION IS COMPLETED.

5. EXCEPT WHERE NOTED, CODE NUMBER AND SIGN LISTED ARE STANDARD AS SHOWN IN MUTCD 2009 AND STANDARD HIGHWAY SIGNS MANUAL, FHWA, 2004 WITH THE 2012 SUPPLEMENT. (CONSULTANT SHALL UPDATE EDITION AS NEEDED.)

6. THE CONTRACTOR SHALL ESTABLISH, STAKE AND PAINT SIGN LOCATIONS WITH THE USE OF A FLORIDA REGISTERED LAND SURVEYOR. IF THE STAKES AND/OR PAINTED MARKS ARE OBLITERATED DURING THE CONSTRUCTION PROCESS, IT IS THE CONTRACTOR'S RESPONSIBILITY TO HAVE THE SIGN LOCATIONS RE-ESTABLISHED BY A FLORIDA REGISTERED LAND SURVEYOR. NO ADDITIONAL PAYMENT WILL BE ALLOWED.

7. SIGN ASSEMBLY LOCATIONS SHOWN ON PLANS WHICH ARE IN CONFLICT WITH LIGHTING, UTILITIES, DRIVEWAYS, PUBLIC SIDEWALK CURB RAMPS, ETC. MAY BE ADJUSTED SLIGHTLY AS DIRECTED BY THE CEI. THE ENGINEER OF RECORD MUST APPROVE EXTREME LOCATION CHANGES. IN ALL CASES ROADWAY SAFETY SHALL NOT BE COMPROMISED AND ADA REQUIREMENTS FOR UNOBSTRUCTED PEDESTRIAN PATHS SHALL BE SATISFIED.

8. THE CONTRACTOR SHALL SET ROADWAY GROUND MOUNT SIGNS AT PROPER DEFLECTION ANGLE TO THE ROADWAY IN ACCORDANCE WITH FDOT INDEX 17302, UNLESS NOTED OTHERWISE IN THE PLANS.

9. THE CEI SHALL APPROVE COMMON POST MOUNTING OF REGULATORY SIGN PANELS PRIOR TO ASSEMBLY INSTALLATION. NO SIGNS SHALL BE MOUNTED BACK TO BACK WITH STOP OR YIELD SIGNS.

10. CARE SHALL BE TAKEN THAT OVERHEAD PANELS ARE POSITIONED OVER THE LANE(S) TO WHICH THEY APPLY AND AS SHOWN IN THE PLANS. THE CEI SHALL APPROVE THE LOCATIONS ALONG THE TRUSS PRIOR TO INSTALLATION.

11. MILEPOST MARKERS SHALL BE INSTALLED IN ACCORDANCE WITH THE VERTICAL CLEARANCE CRITERIA IN FDOT INDEX 17302 REGARDLESS OF LOCATION, I.E. ROADSIDE OR TOP OF BARRIER WALL.

12. THE CONTRACTOR SHALL COMPLETELY FILL IN ALL HOLES WITH SELECT MATERIALS IN 12" LIFTS AND SOD GROUND MOUNT AND OVERHEAD SIGN REMOVAL LOCATIONS WITHIN 24 HOURS. FOUNDATIONS FOR ALL OVERHEAD SIGN STRUCTURES SHALL BE REMOVED 36" BELOW THE GROUND SURFACE. PAYMENT SHALL BE CONSIDERED INCIDENTAL TO SIGN REMOVAL. FINAL WORK ITEMS MAY ONLY BE DEFERRED AT THE DIRECTION OF THE CEI.

13. THE CONTRACTOR SHALL BE RESPONSIBLE FOR WORK, WHEN NECESSARY, TO MEET ALL EROSION CONTROL CRITERIA AS REQUIRED IN THE SPECIFICATIONS. AN EROSION CONTROL PLAN SHALL BE SUBMITTED TO THE CEI FOR APPROVAL PRIOR TO BEGINNING ANY CONSTRUCTION ACTIVITY. PAYMENT FOR ALL EROSION CONTROL WORK AND MATERIALS SHALL BE CONSIDERED INCIDENTAL TO THE UNIT COST OF THE SIGN ASSEMBLY.

14. ALL MISCELLANEOUS WORK NECESSARY IN THE SHOULDER AREA TO CONSTRUCT AND/OR REMOVE SIGNS (I.E. GRADING, SODDING, CLEARING AND GRUBBING, GUARDRAIL RE-SETTING OR FENCE RE-SETTING) IS CONSIDERED INCIDENTAL, AND SHALL BE CONSIDERED INCIDENTAL TO THE COST OF THE SIGN ASSEMBLY. ALL DISTURBED AREAS SHALL BE SODDED. THE CONTRACTOR SHALL HAUL ALL EXCESS EXCAVATION AND WASTE MATERIALS OFF-SITE. REMOVAL OF THESE MATERIALS SHALL BE CONSIDERED INCIDENTAL TO THE COST OF THE SIGN ASSEMBLY.

15. EXISTING SIGNS TO BE REMOVED SHALL BE MEASURED AND PAID FOR BY THE POST ASSEMBLY REGARDLESS OF THE NUMBER OF EXISTING PANELS ATTACHED.

16. EXISTING SIGN PANELS AND/OR SIGN ASSEMBLIES TO BE REMOVED SHALL BECOME THE PROPERTY OF THE CONTRACTOR AND DISPOSED OF AT HIS EXPENSE EXCEPT WHERE SPECIFIED IN THE PLANS OR SPECIAL PROVISIONS. ALL SIGN ASSEMBLIES SCHEDULED FOR REMOVAL SHALL BE TAKEN OFF THE PROJECT SITE BY THE CONTRACTOR WITHIN 48 HOURS OF REMOVAL.

17. THE CONTRACTOR SHALL VERIFY FIELD ELEVATIONS FOR VERTICAL SUPPORTS FOR ALL SIGNS PRIOR TO FABRICATION.

18. SIGN ITEMS 700-4-ABC **(CONSULTANT SHALL UPDATE AS NEEDED):** DESIGN WIND LOADS ARE BASED ON BASIC WIND SPEED OF XXX MPH AS SHOWN IN THE FDOT DESIGN STANDARDS **(CONSULTANT TO INSERT APPLICABLE DESIGN WIND SPEED BASED ON PROJECT LOCATION)**. IN ACCORDANCE WITH FDOT STRUCTURES MANUAL, THE STRUCTURES HAVE BEEN DESIGNED IN ACCORDANCE WITH THE LATEST FDOT DESIGN STANDARDS, INDEX DRAWINGS AND THE FOLLOWING REQUIREMENTS:

   A) INCREASE THE PROPOSED SIGN PANEL DEPTH BY 20% FOR DESIGN WITH THE FUTURE PANEL(S) ASSUMED TO BE BOTTOM JUSTIFIED ON THE TRUSS. WHEN THE SPAN TRUSS IS TO ACCOMMODATE PANEL(S) OVER ONLY ONE DIRECTION OF TRAVEL, A FUTURE PANEL, INCLUDING EXIT NUMBER, SHALL BE CONSIDERED OVER THE OPPOSITE ROADWAY FOR THE PURPOSE OF PROVIDING MAXIMUM FLEXIBILITY FOR FUTURE USE.

   B) SPAN TYPE STRUCTURES SHALL MEET THE CRITERIA A.) ABOVE OR THE FDOT STRUCTURES MANUAL CRITERIA FOR URBAN AREAS, WHICHEVER GOVERNS.

   C) CANTILEVER ARM LENGTHS AND UPRIGHT HEIGHTS WERE DETERMINED BASED ON INITIAL SIGN CONFIGURATION. INITIAL PANEL SHALL BE POSITIONED TO MATCH THE END OF THE CANTILEVER ARM FOR AESTHETICS.

   D) FOUNDATION DETAILING SHALL BE ACCORDING TO FDOT INDEX 11310 OR 11320, EXCEPT THE DRILLED SHAFT OR PEDESTAL SHALL EXTEND A MINIMUM 3 INCHES ABOVE THE GROUND LINE OR THE DESIGN HIGH WATER LINE AND A 3 INCH GROUT PAD SHALL BE UTILIZED FOR ALL OVERHEAD SIGN STRUCTURES.

   E) CANTILEVER ARM LENGTHS WERE DETERMINED BASED ON THE INITIAL SIGN CONFIGURATION. THE 20% INCREASED SIGN PANEL AREAS ARE NOT SHOWN ON THE CROSS SECTIONS. ANY FUTURE PANELS SHOWN ON THE CROSS SECTIONS WERE FOR STRUCTURE DESIGN PURPOSES ONLY AND ARE NOT PART OF THIS CONTRACT.

19. PRIOR TO ERECTION OF ANY OVERHEAD SIGN STRUCTURES, THE AS-BUILT LOCATION OF THE ANCHOR BOLTS SHALL BE SURVEYED BY A FLORIDA REGISTERED LAND SURVEYOR AND SUBMITTED IN A WRITTEN REPORT TO THE CEI FOR APPROVAL. COST TO BE CONSIDERED INCIDENTAL TO THE UNIT PRICE OF THE SIGN ASSEMBLY.

20. DUE TO THE TIMING OF ADJACENT CONTRACTS, THE CEI MAY DIRECT THE CONTRACTOR TO DELAY INSTALLATION OF CERTAIN PANELS. PANELS SHALL NOT BE INSTALLED AND COVERED WITHOUT PRIOR APPROVAL FROM THE AUTHORITY. NO ADDITIONAL PAYMENT WILL BE PERMITTED.

21. STEEL AND ALUMINUM POST SIZES ARE SHOWN IN THE PLANS FOR MULTI-POST MOUNTED SIGNS. IT IS THE CONTRACTOR'S RESPONSIBILITY TO VERIFY POST SIZES AND LENGTHS PRIOR TO FABRICATION. THE CONTRACTOR MAY USE AN ALTERNATE POST MATERIAL UPON PROVIDING ADEQUATE JUSTIFICATION TO THE PROJECT ENGINEER. THE SAME POST MATERIAL AND SHAPE, IF APPLICABLE, SHALL BE USED THROUGHOUT THE ENTIRE PROJECT.

22. ALL SUPPORT COLUMNS FOR OVERHEAD SIGN STRUCTURES, INCLUDING PROPOSED AND EXISTING TO REMAIN OR TO BE RELOCATED WITHIN THE SIGNING PROJECT LIMITS, SHALL BE PAINTED WHEN PROJECT REACHES SUBSTANTIAL COMPLETION. PAINTING SHALL BE IN ACCORDANCE WITH THE SPECIAL PROVISION AND PLAN DETAIL(S). PAYMENT FOR PAINTING PROPOSED UPRIGHTS SHALL BE CONSIDERED INCIDENTAL TO STRUCTURE INSTALLATION. PAYMENT FOR PAINTING EXISTING UPRIGHTS (TO REMAIN OR RELOCATED) SHALL BE MADE UNDER ITEM NO. 560-3, EXISTING OVERHEAD SIGN STRUCTURE UPRIGHT PAINTING (EA). SEE SPECIAL PROVISIONS.

23. SIGN STRUCTURE UPRIGHT SURFACES SHALL BE PREPARED IN ACCORDANCE WITH THE SPECIAL PROVISIONS BEFORE PAINTING. ALL BOLTS, CROSS BRACE DIAGONALS AND FLANGES NOTED ON THE PLANS DETAIL SHEET(S) SHALL BE THOROUGHLY CLEANED AND FREE OF DEBRIS BEFORE PRIMER AND FINISHED COAT(S) ARE APPLIED.

24. THE CONTRACTOR SHALL REMOVE AND REINSTALL ALL EQUIPMENT ATTACHED TO SIGN UPRIGHTS PRIOR TO BEGINNING THE PAINTING PROCESS. EQUIPMENT SHALL INCLUDE BUT IS NOT LIMITED TO ELECTRICAL DISCONNECT SWITCH BOXES, ELECTRICAL AND/OR FON CONDUIT, DMS CONTROLLER BOXES, ANTENNAE, ETC. ANY EQUIPMENT DAMAGED DURING THE PAINTING PROCESS SHALL BE REPAIRED OR REPLACED IN KIND BY THE CONTRACTOR AT HIS EXPENSE. ALL REPAIRS SHALL MEET THE SATISFACTION OF THE ENGINEER OF RECORD.

25. THE CONTRACTOR SHALL VERIFY ALL SIGN STRUCTURE IDENTIFICATION NUMBERS ON EXISTING STRUCTURES PRIOR TO ORDERING OR FABRICATING STENCILS. ALL DISCREPANCIES SHALL BE REPORTED TO THE CEI.

26. THE CONTRACTOR SHALL REPAINT ALL SIGN STRUCTURE IDENTIFICATION NUMBERS REMOVED AS A RESULT OF PAINTING THE UPRIGHTS ONCE THE FINISH COAT HAS SUFFICIENTLY CURED. THE CONTRACTOR SHALL SUBMIT A SAMPLE OF A FINISHED STENCIL AND A WORKSHEET SHOWING FONT TYPE, SIZE, AND SPACING BETWEEN CHARACTERS TO THE CEI FOR APPROVAL PRIOR TO FINAL PRODUCTION OF STENCILS. SEE SPECIAL PROVISION.

27. ALL OVERHEAD SIGNS SHALL BE LIGHTED. SIGN LUMINAIRES SHALL BE AS NOTED IN THE LIGHTING PLANS ON THE GENERAL NOTES AND LEGEND SHEET.

28. TOP MOUNTED LUMINARIES SHALL NOT BE ALLOWED ON THE MAINLINE OR RAMPS WITHIN THE AUTHORITY'S JURISDICTION.

29. THE CONTRACTOR SHALL PROVIDE WIRING AND PULL BOXES (AS NECESSARY) TO ALL FUTURE SIGN PANEL POSITIONS AND CAP OFF IN THE CONNECTOR BOX.

30. WHEN REMOVING PANELS AND/OR ADDING PANELS TO AN EXISTING STRUCTURE: THE COST FOR ADJUSTING EXISTING LUMINAIRES, INCLUDING REPAIR IF NECESSARY, AND ANY OTHER HARDWARE AND COMPONENT PARTS REQUIRED FOR A COMPLETE LUMINAIRE SHALL BE CONSIDERED INCIDENTAL TO THE UNIT PRICE FOR PANEL REMOVAL OR INSTALLATION. REMOVAL OF EXISTING LUMINAIRES SHALL INCLUDE REMOVAL OF MOUNTING BRACKET ARM. INSTALLATION OF NEW LUMINAIRES SHALL INCLUDE NEW MOUNTING BRACKET ARMS.

31. THE SIGN LIGHTING LUMINARIES SHALL BE "NIGHT AIMED" TO ASSURE PROPER ILLUMINATION OF THE SIGN SURFACE. THE LUMINARIES MUST BE AT AN ANGLE SUFFICIENT TO PREVENT THEM FROM SHINING INTO THE FACES OF DRIVERS TRAVELING IN THE OPPOSITE DIRECTION.

32. SIGN LIGHTING LUMINARIES MAY REQUIRE SHIELDING TO PREVENT GLARE INTO NEIGHBORING RESIDENTIAL PROPERTIES. WHEN INCLUDED IN PLANS THE CEI SHALL FIELD VERIFY AND DOCUMENT NEED FOR SHIELDING PRIOR TO INSTALLATION. THE CEI SHALL REPORT ANY DISCREPENCIES TO THE ENGINEER OF RECORD FOR RESOLUTION. COST OF SHIELDING SHALL BE CONSIDERED INCIDENTAL TO THE SIGN ASSEMBLY OR NEW SIGN LUMINAIRE INSTALLATION AS APPROPRIATE.

33. THE CONTRACTOR SHALL ENERGIZE OVERHEAD SIGN LUMINAIRES WITHIN 24 HOURS OF INSTALLATION.

34. THE CONTRACTOR SHALL BE RESPONSIBLE FOR VERIFYING LOCATIONS OF EXISTING ROADWAY LIGHTING CONDUIT PRIOR TO INSTALLATION OF ROADWAY SIGNAGE.

35. A SEPARATE GROUNDING ELECTRODE AND PULL BOX IS REQUIRED PER UPRIGHT OF EACH NEW CANTILEVER. TWO SEPARATE GROUNDING ELECTRODES AND PULL BOXES ARE REQUIRED PER UPRIGHT ON EACH NEW SPAN TRUSS STRUCTURE. PAYMENT SHALL BE INCIDENTAL TO COST OF STRUCTURE. INSTALLATION SHALL BE IN ACCORDANCE WITH FDOT INDEX 17505 WITH A MINIMUM REQUIRED LENGTH OF 20 LINEAR FEET AND A MEASURED RESISTANCE OF 25 OHMS OR LESS. ALL CONNECTIONS SHALL BE EXOTHERMICALLY WELDED.

36. FOR LOCATIONS THAT REQUIRE A GROUNDING ELECTRODE ARRAY (AS DETERMINED BY THE CEI), A SEPARATE PULL BOX SHALL BE INSTALLED FOR EACH ELECTRODE WITHIN THE ARRAY AND SHALL BE CONSIDERED INCIDENTAL TO THE COST OF THE SIGN ASSEMBLY.

37. 3M SCOTCH BRAND VERY HIGH BOND (VHB) ACRYLIC FOAM TAPE NUMBER 4950 OR THE AUTHORITY'S APPROVED EQUAL IN COMBINATION WITH MECHANICAL FASTENERS SHALL BE USED TO ATTACH PANELS TO WIND BEAMS, BRACKETS AND SPLICE PLATES ON ALL SINGLE AND MULTI-POST SIGN ASSEMBLIES. CONTRACTOR SHALL MEET ALL 3M REQUIREMENTS FOR PROPER INSTALLATION OF VHB. VHB TAPE SHALL NOT BE REUSED ONCE INSTALLED. DESIGN SHALL MEET MOST CURRENT FDOT WIND LOAD CRITERIA. SEE SPECIAL PROVISIONS.

REVISIONS

DATE	BY	DESCRIPTION	DATE	BY	DESCRIPTION

CENTRAL FLORIDA EXPRESSWAY AUTHORITY

GENERAL NOTES
SIGNING

PROJECT	SHEET NO.
STANDARDS	1

38. MECHANICAL FASTENERS USED TO ATTACH SIGN PANELS TO WIND BEAMS, BRACKETS AND SPLICE PLATES FOR ALL OVERHEAD AND GROUND MOUNTED PANELS SHALL BE COUNTERSUNK SCREWS.

39. THE CONTRACTOR SHALL PATCH ALL COUNTERSUNK SCREWS ON ALL NEW SIGN FACES. RIVETS ON OVERLAYS AND/OR DEMOUNTS SHALL BE PAINTED WITH COLOR TO MATCH SHEETING AT RIVET LOCATION. SEE SPECIAL PROVISIONS.

40. NEW SIGN PANEL(S) ON EXISTING OVERHEAD STRUCTURES SHALL BE INSTALLED USING NEW HANGERS AND HARDWARE NECESSARY TO SECURE THE PROPOSED SIGN PANEL(S) IN ACCORDANCE WITH FDOT INDEX 11300. PAYMENT SHALL BE CONSIDERED INCIDENTAL TO THE UNIT PRICE OF THE SIGN PANEL.

41. EXISTING SIGNS TO BE RELOCATED TO PROPOSED STRUCTURES SHALL BE INSTALLED USING NEW COMPONENT PARTS REQUIRED FOR A COMPLETE SIGN INSTALLATION INCLUDING, BUT NOT LIMITED TO, HANGERS, LUMINAIRES, LUMINARE MOUNTING BRACKET ARMS AND ALL HARDWARE ASSOCIATED WITH EACH COMPONENT. PAYMENT SHALL BE CONSIDERED INCIDENTIAL TO EXISTING SIGN INSTALLATION.

42. NEW SIGN PANELS INSTALLED ON EXISTING POSTS (SINGLE OR MULTI-POST) SHALL BE MOUNTED USING NEW HARDWARE. PAYMENT SHALL BE CONSIDERED INCIDENTAL TO NEW PANEL INSTALLATION.

43. WHERE FULL PANEL OVERLAYS ARE SPECIFIED, THE CONTRACTOR SHALL BE RESPONSIBLE FOR DETERMINING AND MATCHING EXISTING CORNER RADII. ALL EXISTING DEMOUNTS OR OVERLAYS SHALL BE REMOVED PRIOR TO PROPOSED FULL OR PARTIAL OVERLAY INSTALLATION. THE COST IS CONSIDERED INCIDENTAL AND IS TO BE INCLUDED IN THE PAY ITEM FOR PROPOSED OVERLAY.

44. FOR PARTIAL PANEL OVERLAYS, THE CONTRACTOR SHALL BE RESPONSIBLE FOR ENSURING ALL EXISTING COPY TO BE OVERLAID IS COMPLETELY COVERED. THE CONTRACTOR SHALL ALSO ENSURE THE OVERLAY DOES NOT COVER ANY PORTION OF THE EXISTING COPY OR BORDER WHICH IS TO REMAIN VISIBLE.

45. UTILITY LOCATIONS SHOWN IN THE PLANS ARE APPROXIMATE. SEE UTILITY ADJUSTMENT PLANS. THERE MAY BE ADDITIONAL UTILITIES WITHIN THE CONSTRUCTION AREAS WHICH ARE NOT SHOWN. IT SHALL BE THE CONTRACTOR'S RESPONSIBILITY TO DETERMINE THE EXACT LOCATION AND OWNERSHIP OF ALL UTILITIES PRIOR TO ANY CONSTRUCTION ACTIVITY. (FOR PROJECTS WITHOUT UTILITY ADJUSTMENT PLANS, THE SECTION ENGINEER SHALL DELETE THE SECOND SENTENCE AND SUPPLY THE LIST OF UTILITY OWNERS AND TELEPHONE NUMBERS.)

46. THE AUTHORITY'S FIBER OPTIC TONE WIRE, CONDUIT, AND LOCATE TAPE WITHIN FIVE (5) FEET OF MULTI-POST AND OVERHEAD SIGN STRUCTURES SHALL BE MANUALLY LOCATED VIA SOFT DIG EXCAVATION PRIOR TO THE CONSTRUCTION OF PROPOSED SIGN STRUCTURES.

47. VEGETATION SHALL BE REMOVED OR CUT BACK AS DIRECTED BY THE CEI TO PROVIDE ADEQUATE SIGHT DISTANCE FOR ALL OVERHEAD AND GROUND MOUNTED SIGNS. VEGETATION REMOVAL AND TRIMMING SHALL BE CONSIDERED INCIDENTAL TO THE UNIT PRICE OF THE SIGN ASSEMBLY. (SECTION ENGINEER SHALL SPECIFY CRITERIA FOR LINE OF SIGHT TRIMMING/REMOVAL ALONG MAINLINE EITHER BY A SPECIAL PROVISION OR A DETAIL. SEE APPENDIX FOR EXAMPLE.)

48. STRUCTURE NUMBERS XX, XX, AND XX ARE WITHIN THE LIMITS OF AN AUTHORITY LANDSCAPING PROJECT OR AN EXISTING AUTHORITY SPECIAL LANDSCAPED AREA. STRUCTURES MAY BE RELOCATED SLIGHTLY AS DIRECTED BY THE CEI IN ORDER TO MINIMIZE IMPACT TO LANDSCAPING MATERIAL. THE CONTRACTOR SHALL EXERCISE CAUTION THROUGH LANDSCAPING LIMITS DURING ALL PHASES OF CONSTRUCTION ACTIVITY. ANY EXISTING LANDSCAPE MATERIAL DAMAGED DURING THE CONSTRUCTION PROCESS SHALL BE REPLACED IN KIND AT THE CONTRACTOR'S EXPENSE.

49. IN ORDER TO ACCOMODATE THE SIGN ASSEMBLY, SOME LANDSCAPE MATERIAL MAY REQUIRE PERMANENT RELOCATION OR REMOVAL AND REPLACEMENT WITH ANOTHER VARIETY OF MATERIAL. THE CONTRACTOR SHALL PROVIDE THE CEI WITH A PRELIMINARY LANDSCAPE ADJUSTMENT PLAN INCLUDING PROPOSED PLANT MATERIAL(S). THE AUTHORITY SHALL APPROVE ALL PROPOSED OR RELOCATED PLANT MATERIAL PRIOR TO INSTALLATION. COST OF LANDSCAPE MATERIAL ADJUSTMENT SHALL BE CONSIDERED INCIDENTAL TO THE UNIT COST OF THE SIGN ASSEMBLY.

50. AT LOCATIONS WITHIN PLANNED LANDSCAPING AREAS (BY OTHERS), THE CONTRACTOR SHALL COMPLETE ALL WORK (I.E. GRADING, CLEAN-UP, ETC.) IMMEDIATELY UPON INSTALLATION OF SIGN ASSEMBLY SUCH THAT LANDSCAPING FEATURES MAY BE INSTALLED. FINAL WORK ITEMS MAY ONLY BE DEFERRED AT THE DIRECTION OF THE CEI.

51. ALL NEW SIGN PANELS REGARDLESS OF MOUNTING (OVERHEAD, SINGLE POST OR MULTI-POST) SHALL BE A MINIMUM OF 0.125 INCHES THICK. ALL SIGN OVERLAYS SHALL BE A MINIMUM OF 0.08 INCHES THICK. EXTRUDED PANELS SHALL NOT BE ALLOWED.

52. ALL ROADWAY AND TOLL PLAZA SIGN PANELS REGARDLESS OF LOCATION, MOUNTING TYPE (OVERHEAD, SINGLE OR MULTI-POST) OR LIGHTING SHALL BE FABRICATED USING 3M DIAMOND GRADE CUBED (DG3) SHEETING OR THE AUTHORITY'S APPROVED EQUAL. WARNING SIGNS FOR LANE DROP (W4-2), LANE ENDS (W9-1, W9-2), REDUCE SPEED AHEAD (W3-5), CURVES AND PEDESTRIAN CROSSINGS SHALL BE 3M FLUORESCENT DG3 SHEETING OR THE AUTHORITY'S APPROVED EQUAL. SCHOOL CROSSING SIGNS (S1-1) AND SUPPLEMENTAL PLAQUES SHALL BE FABRICATED USING 3M DG3 FLUORESCENT YELLOW-GREEN SHEETING OR THE AUTHORITY'S APPROVED EQUAL.

53. THE COLOR(S) OF ALL PANELS POSITIONED ABOVE AND BELOW A ROUTE SHIELD (U.S., STATE, COUNTY AND TOLL) IN ROUTE MARKER ASSEMBLIES SHALL MATCH THE ASSOCIATED SHIELD.

54. ALL E5-1A PANELS SHALL BE FABRICATED IN ACCORDANCE WITH PLAN DETAILS.

55. FOR FULL PANEL OVERLAYS, THE OVERLAY FABRICATOR SHALL PROVIDE A DETACHED BACK OF PANEL DECAL CONTAINING ALL REQUIRED INFORMATION. THE CONTRACTOR SHALL APPLY THE DECAL TO THE BACK OF THE EXISTING PANEL IN THE VICINITY OF THE EXISTING DECAL. THE EXISTING DECAL SHALL REMAIN VISIBLE.

56. A DECAL SHALL BE PROVIDED ON BACK OF ALL NEW PANELS AND OVERLAYS (FULL OR PARTIAL) REGARDLESS OF MOUNTING TYPE (OVERHEAD, SINGLE OR MULTI-POST). LETTERS SHALL BE BLACK AND LARGE ENOUGH TO BE CLEARLY LEGIBLE. LETTERS SHALL BE WHITE IF THE BACK OF THE PANEL HAS BEEN PAINTED BLACK. THE DECAL SHALL CONTAIN THE FOLLOWING INFORMATION:
CFX/PROJECT NUMBER
FABRICATOR'S INITIALS/DATE OF FABRICATION
SHEETING MANUFACTURER/NAME OF SHEETING
DATE OF INSTALLATION

57. THE SIGN PANEL FABRICATOR SHALL PROVIDE A COLOR PHOTOGRAPH OF THE ASSEMBLED PANEL FOR ALL MULTI-POST AND OVERHEAD MOUNTED SIGNS. PHOTOGRAPHS SHALL BE SUBMITTED TO THE CEI. THE CEI SHALL FORWARD A COPY OF THE PICTURES TO THE EOR AND THE AUTHORITY'S REPRESENTATIVE. THE CEI, EOR AND THE AUTHORITY'S REPRESENTATIVE SHALL APPROVE THE PHOTOS PRIOR TO SHIPMENT. DIGITAL FORMAT IS ACCEPTABLE; "JPG" FORMAT PREFERRED. PHOTO DETAIL AND RESOLUTION SHALL BE SUCH THAT REVIEWER CAN REASONABLY DETERMINE IF THE PANEL HAS BEEN FABRICATED IN ACCORDANCE WITH APPROVED SHOP DRAWINGS. PHOTOGRAPHS WILL NOT BE REQUIRED FOR MULTI-POST ROUTE MARKER COMPONENT PANELS UNLESS THEY ARE SPECIAL DESIGN. ONLY ONE REPRESENTATIVE PHOTOGRAPH IS REQUIRED FOR MULTIPLE IDENTICAL SPECIAL DESIGN ROUTE MARKER COMPONENTS.

58. IF SIGN SHEETING, COLORS OR ADHESIVE TAPE MATERIALS ARE PROPOSED FOR USE OTHER THAN THE 3M PRODUCTS SPECIFIED IN THE GENERAL NOTES OR PLAN DETAILS, A 4" X 4" (SHEETING) OR 24" X 1" (TAPE) SAMPLE OF EACH IN ALL APPLICABLE COLORS SHALL BE SUBMITTED TO THE AUTHORITY FOR APPROVAL PRIOR TO FABRICATION OR USE. ALL SAMPLES SHALL INCLUDE MANUFACTURER'S INFORMATION INCLUDING, BUT NOT LIMITED TO, SPECIFICATIONS, WARRANTY AND LOCAL SITES WHERE PRODUCT IS CURRENTLY IN USE.

59. SINGLE AND MULTI-POST SIGN ASSEMBLIES SHALL HAVE THE FOLLOWING AESTHETIC TREATMENT. ALL POSTS, POST ATTACHMENT HARDWARE, AND BACK OF SIGN PANELS SHALL BE PAINTED BLACK BY EACH COMPONENT FABRICATOR. THE BLACK PAINT SHALL BE SEMI-GLOSS "THERMOSET POWDER PAINT FINISH", FEDERAL COLOR # 27038. THE BACK OF PANEL DECAL CONTAINING OWNER AND FABRICATION INFORMATION SHALL BE APPLIED AFTER THE PAINTING PROCESS IS COMPLETED. **(NOTE ONLY APPIES TO SR 408 BETWEEN THE INTERCHANGES AT KIRKMAN RD AND CHICKASAW TRAIL).**

60. THE CONTRACTOR SHALL BE RESPONSIBLE FOR FILLING OUT THE COLUMN ENTITLED "AS-BUILT STATION" IN THE TABLE ON THE DETAIL SHEET FOR SPECIAL DESIGN MILE POSTS.

61. (FOR PROJECTS WITH TOLL PLAZAS) GATORHEAD MOUNTED SIGNS (TYPICALLY PAY TOLL AND WATCH FOR PEDESTRIANS) SHALL NOT EXTEND PAST THE CONCRETE BARRIER FACE. IF THE FACE IS BEVELED, THE PANELS SHALL NOT EXTEND PAST THE BEGINNING OF THE BEVELED EDGE. EACH PANEL SHALL BE MOUNTED FLUSH WITH THE FLAT PORTION OF THE BARRIER FACE. THE CEI SHALL IMMEDIATELY NOTIFY THE EOR AND THE AUTHORITY IF THIS REQUIREMENT IS NOT SATISFIED.

PAVEMENT MARKING GENERAL NOTES

1. STOP BARS, CROSSWALKS, STANDARD PAVEMENT MESSAGES AND STANDARD DIRECTIONAL ARROWS SHALL BE THERMOPLASTIC. ALL OTHER STRIPING WITHIN THE EXPRESSWAY AUTHORITY'S JURISDICTION SHALL BE 3M COMPANY SERIES 380IES OR THE AUTHORITY'S APPROVED EQUAL ON ASPHALT AND CONCRETE PAVEMENT, UNLESS OTHERWISE NOTED IN PLANS. THE OPTION LANE ARROW SHALL BE PREFORMED THERMOPLASTIC, PPRT, OR STANDARD THERMOPLASTIC AS APPROVED BY THE AUTHORITY.
2. ALL PAVEMENT MARKINGS ON NON AUTHORITY FACILITIES SHALL BE THERMOPLASTIC.
3. ALL MAINLINE AND RAMP SKIP LINES (10'-30') SHALL BE PREFORMED PATTERNED RETRO-REFLECTIVE CONTRAST TAPE (PPRT) CONSISTING OF A 6" WHITE TAPE BORDERED ON BOTH SIDES (LONGITUDINALLY) WITH A 1 ½" MATTE BLACK CONTRASTING TAPE, FOR A TOTAL WIDTH OF 9".
4. WHITE EDGE LINES SHALL BE PREFORMED PATTERNED RETRO-REFLECTIVE CONTRAST TAPE (PPRT) CONSISTING OF A 6" WHITE TAPE BORDERED ON BOTH SIDES (LONGITUDINALLY) WITH A 1 ½" MATTE BLACK CONTRASTING TAPE, FOR A TOTAL WIDTH OF 9".
5. RETROREFLECTIVE PAVEMENT MARKERS (RPMS) ARE TO BE PLACED ALONG THE ENTIRE LENGTH OF THE PROJECT IN ACCORDANCE WITH FDOT INDEX 17345, 17346 AND 17352, UNLESS OTHERWISE NOTED IN PLANS. ALL RPMS INSTALLED ALONG THE AUTHORITY'S MAINLINE AND ALONG RAMPS WITHIN THE AUTHORITY'S JURISDICTION SHALL BE 3M COMPANY SERIES 290 RPMS OR THE AUTHORITY'S APPROVED EQUAL.
6. REFLECTIVE PAVEMENT MARKER ADHESIVE FOR USE ON ASPHALT AND CONCRETE PAVEMENT SHALL BE BITUMINOUS MATERIAL UNLESS NOTED OTHERWISE IN THE SPECIAL PROVISIONS.
7. THE CONTRACTOR SHALL PROVIDE A TEMPORARY LAYOUT OF ALL TOLL PLAZA RELATED PAVEMENT MARKINGS FOR APPROVAL BY THE CEI PRIOR TO PERMANENT INSTALLATION.
8. ANY EXISTING PAVEMENT MARKINGS, RPM'S OR DELINEATORS SCHEDULED TO REMAIN EITHER WITHIN OR BEYOND THE PROJECT LIMITS (INCLUDING MILLING AND RESURFACING), WHICH ARE DAMAGED DURING CONSTRUCTION ACTIVITIES SHALL BE REPLACED IN KIND BY THE CONTRACTOR AT HIS EXPENSE. LIMIT OF REPLACEMENT IF REQUIRED SHALL BE DETERMINED BY THE CEI.
9. ROADSIDE MOUNTED FLEXIBLE TUBULAR DELINEATORS SHALL BE "SAFE-HIT CORPORATION, TYPE 2 GUIDE POST (48" WITH FLATTENED TOP)" OR THE AUTHORITY'S APPROVED EQUAL.
10. ROADWAY MOUNTED FLEXIBLE SINGLE UNIT DELINEATORS SHALL BE FLEXSTAKE 48" FLAT, LOW PROFILE SURFACE MOUNT DELINEATORS MODEL HD OR THE AUTHORITY'S APPROVED EQUAL. DELINEATOR ADHESIVE FOR USE ON ASPHALT AND CONCRETE PAVEMENT SHALL BE BITUMINOUS MATERIAL. ENTIRE DELINEATOR BASE SHALL BE ADHERED TO ROADWAY.
11. PAVEMENT MARKINGS (I.E., EDGE LINES, CHANNELIZATION STRIPING, ETC.) SHALL NOT EXTEND THROUGH CROSSWALK AREAS.
12. ALL REMOVABLE PAVEMENT MARKING SHALL BE 3M COMPANY WET REFLECTIVE REMOVABLE TAPE, SERIES 780 OR THE AUTHORITY'S APPROVED EQUAL.
13. THE CONTRACTOR SHALL NOT ABUT MULTIPLE STRIPES IN ORDER TO MEET THE SPECIFIED WIDTH (I.E., THREE 6" STRIPES TO MAKE ONE 18" STRIPE, ETC.). CONTRACTOR SHALL INSTALL ONE STRIPE OF THE SPECIFIED WIDTH.
14. THE EXISTING PAVEMENT MARKINGS AND RPM'S SHALL BE COMPLETELY REMOVED AND REPLACED ON ALL CONCRETE BRIDGE DECKS (INCLUDING APPROACH SLABS) AND TOLL PLAZA DECKS WITHIN CONSTRUCTION LIMITS. REMOVAL OF RPMS AND PERMANENT MARKINGS SHALL BE INCIDENTAL TO PAY ITEM NO. 400-145.
15. IF DELINEATORS, RPMS OR PAVEMENT MARKING MATERIALS ARE PROPOSED FOR USE OTHER THAN THE PRODUCTS SPECIFIED IN THE GENERAL NOTES OR PLAN DETAILS, A SAMPLE OF EACH IN ALL APPLICABLE COLORS SHALL BE SUBMITTED TO THE AUTHORITY FOR APPROVAL PRIOR TO INSTALLATION. ALL SAMPLES SHALL INCLUDE MANUFACTURERS INFORMATION INCLUDING, BUT NOT LIMITED TO, SPECIFICATIONS, WARRANTY AND LOCAL SITES WHERE PRODUCT IS CURRENTLY IN USE.
16. PROPOSED 12" WHITE/BLACK ALTERNATING 3'-3'-9' SKIP STRIPING ON CONCRETE PAVEMENT SHALL BE INSTALLED USING THE BUTT SPLICE METHOD IN ACCORDANCE WITH THE LATEST EDITION OF 3M COMPANY "STAMARK TAPES PAVEMENT SURFACE PREPARATION AND APPLICATION TECHNIQUES, INFORMATION FOLDER 5.7". CONTACT 3M AT 1-800-553-1380 AS NEEDED.
17. THE CONTRACTOR SHALL PROVIDE A TEMPORARY LAYOUT OF THE OPTION LANE DIRECTIONAL ARROW FOR APPROVAL BY THE CEI PRIOR TO PERMANENT INSTALLATION. THE CEI SHALL ADJUST THE LOCATION AS NECESSARY TO PROVIDE OPTIMUM VISUAL BENEFIT TO THE MOTORIST.
18. THE LINEAR DELINEATION SYSTEM (LDS) SHALL BE 3M SERIES 340 OR AUTHORITY APPROVED EQUAL. EACH PANEL SHALL BE 34 INCHES LONG, 6 INCHES WIDE AND SPACED APPROXIMATELY 18 INCHES APART. ANCHOR BOLTS AND BRACKETS SHALL BE USED WHEN ATTACHING LDS PANELS TO BARRIER WALL AND GUARDRAIL RESPECTIVELY. CONTRACTOR SHALL INSTALL THE LDS IN ACCORDANCE WITH 3M REQUIREMENTS AS SPECIFIED IN THE LATEST 3M PRODUCT BULLETIN. CONTACT 1-800-553-1380 FOR ADDITIONAL INFORMATION.
(CONSULTANT TO UPDATE CONTACT PER LATEST 3M PRODUCT BULLETIN)
19. THE CONTRACTOR IS TO ADJUST LDS PANEL SPACING SUCH THAT EACH PANEL INSTALLED IS FULLY 34 INCHES LONG AND SPACING IS EQUIDISTANT. THE CEI SHALL APPROVE SPACING PRIOR TO INSTALLATION.
20. SHEETING ON THE LDS PANELS SHALL BE 3M DG3 OR AUTHORITY APPROVED EQUAL AND COLOR SHALL MATCH ADJACENT EDGE LINE.

PAY ITEM NOTES

IT IS THE EOR'S RESPONSIBILITY TO UPDATE AND/OR COMPLETE ALL PAY ITEM NUMBERS (I.E., 700-4X-XXXD) AND STRUCTURE NUMBERS (I.E., OT-X) AS WELL AS ADD AND/OR REVISE NOTES AS APPLICABLE WITHIN THE AUTHORITY'S JURISDICTION.

1. 700-1-2B, 700-1-3B, 700-1-7B **(WALL MOUNT):** SIGNS ARE SPECIAL DESIGN WALL MOUNTED ASSEMBLIES. COST INCLUDES SIGN, HARDWARE, POST AND MATERIALS FOR A COMPLETE ASSEMBLY PER STRUCTURAL DETAILS IN PLANS. **(TO BE INCLUDED ONLY WHEN AUTHORITY REQUIRES A DESIGN OTHER THAN FDOT INDEX 11871)**
2. 700-1-74 **(RCM, TRAILBLAZERS, OR JCT):** SIGNS ARE SPECIAL DESIGN SINGLE POST ASSEMBLIES. SEE STRUCTURAL DETAILS IN PLANS.
3. 700-1-AB **(FLIP-UP):** PANELS ARE PERMANENT FLIP-UP SIGNS AS DETAILED IN THE FDOT TRAFFIC ENGINEERING MANUAL. PAYMENT FOR THE HINGE AND ANY OTHER SPECIAL HARDWARE REQUIRED FOR THE FLIP-UP PANEL SHALL BE CONSIDERED INCIDENTAL TO SIGN ASSEMBLY INSTALLATION.
4. **(FOR PROJECTS CONTAINING A MULTI-LINE DMS)** 700-10-ABC: SEE ITS PLANS.
5. 700-3-2BBC: SIGN PANEL TO BE MOUNTED FLUSH WITH BRIDGE GIRDER OR PARAPET WALL. SPACERS MAY BE REQUIRED BEHIND THE PANEL SUCH THAT FINAL SIGN FACE IS INSTALLED VERTICALLY PLUMB. ANY ALUMINUM SIGN SURFACE WHICH OTHERWISE COMES INTO CONTACT WITH CONCRETE SHALL BE COATED WITH AN ALKALI-RESISTANCE COATING. CONTRACTOR SHALL SUBMIT SHOP DRAWINGS AND CATALOG CUTS FOR ATTACHMENT METHOD. PAYMENT FOR ALL ADDITIONAL ITEMS SHALL BE CONSIDERED INCIDENTAL TO THE SIGN PANEL.
6. 700-4-ABC, 700-10-ABC (SEE ITS PLANS): SIGN UPRIGHT PAINTING SHALL BE CONSIDERED INCIDENTAL TO COST OF PROPOSED STRUCTURE.
7. 560-3: EXISTING OVERHEAD SIGN STRUCTURE UPRIGHT PAINTING: REMOVAL AND REINSTALLATION OF EXISTING UPRIGHT ATTACHMENTS AND STRUCTURE IDENTIFICATION NUMBERS SHALL BE CONSIDERED INCIDENTAL TO COST OF UPRIGHT PAINTING.
8. 700-1-50, 700-4-54C AND 700-4-640: WHEN EXISTING SIGN ASSEMBLIES ARE TO BE REMOVED FROM OR RELOCATED ALONG BARRIER WALLS AND BRIDGES, THE CONTRACTOR SHALL PATCH, SEAL AND PAINT ALL HOLES AS A RESULT OF ASSEMBLY REMOVAL OR RELOCATION. PAINT SHALL MATCH EXISTING AND MATERIALS SHALL BE APPROVED BY THE CEI PRIOR TO USE. COST SHALL BE CONSIDERED INCIDENTAL TO ASSEMBLY REMOVAL OR RELOCATION.
9. **(FOR USE IN PROJECTS CONTAINING TOLL PLAZA APPROACH SIGNS WITH A SINGLE LINE DMS)** 700-4-ABC: FOR SIGN STRUCTURES OT-X, OT-X, OT-X AND OT-X, PAY ITEM SHALL INCLUDE SPECIAL LUMINAIRE PIPE SUPPORTS FOR THE DMS SIGN. PAYMENT FOR THE DMS IS NOT INCLUDED. SEE ITS PLANS FOR ADDITIONAL DETAILS **(CONSULTANT SHALL REVISE NAME OF PLANS AS NECESSARY.)**
10. 711-1A-BCD : FOR LOCATIONS THAT REQUIRE THERMOPLASTIC PAVEMENT MARKINGS, PAINT SHALL BE USED FOR THE INITIAL APPLICATION TO ALLOW FOR A 30 DAY CURE TIME. INSTALLATION OF THE FINAL THERMOPLASTIC STRIPING SHALL BE AS DIRECTED BY THE AUTHORITY'S DIRECTOR OF CONSTRUCTION AND THE CEI. COST OF THE INITIAL PAINT APPLICATION SHALL BE INCIDENTAL TO THE THERMOPLASTIC PAY ITEM.
11. 713-1AA-BCD: PREFORMED TAPE SHALL BE 3M COMPANY 380IES OR AUTHORITY APPROVED EQUAL. SEE GENERAL NOTES.
12. 705-11B: 3M LINEAR DELINEATION SYSTEM OR AUTHORITY APPROVED EQUAL. SEE PAVEMENT MARKING GENERAL NOTES FOR DETAILS.

REVISIONS					
DATE	BY	DESCRIPTION	DATE	BY	DESCRIPTION

CENTRAL FLORIDA EXPRESSWAY AUTHORITY

PAVEMENT MARKING GENERAL NOTES
SIGNING/MARKING PAY ITEM NOTES

PROJECT	SHEET NO.
STANDARDS	3

Sign	1
Quantity	
Width	4'-0"
Height	5'-6"
Border Width	0.75"
Border Radii	3"
Border Inset	0.25"
Background Color	White
Legend/Border Color	Black
Sheeting	DG3
Arrow Size (Angle)	
Station/Structure	

AUTHORITY LOGO L-4. SEE DETAIL

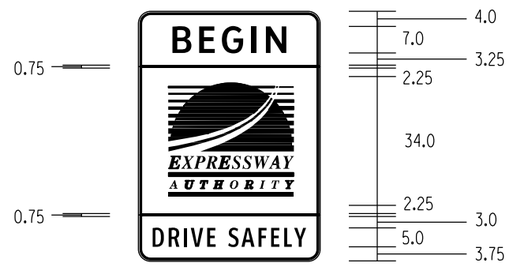

Copy	Spacing																					Length	Size/Series
	B	E	G	I	N																	25.2	7 D
11.4		25.2				11.4																	
																						40	
4	40	4																					
	D	R	I	V	E		S	A	F	E	L	Y										40.1	5 C
4		15.2				5		19.9					3.9										

Sign	2
Quantity	
Width	4'-0"
Height	5'-6"
Border Width	0.75"
Border Radii	3"
Border Inset	0.25"
Background Color	White
Legend/Border Color	Black
Sheeting	DG3
Arrow Size (Angle)	
Station/Structure	

AUTHORITY LOGO L-4. SEE DETAIL

Copy	Spacing																					Length	Size/Series
	E	N	D																			16.7	7 D
15.7		16.7		15.6																			
																						40	
4	40	4																					
	D	R	I	V	E		S	A	F	E	L	Y										40.1	5 C
4		15.2			5			19.9					3.9										

Sign	3
Quantity	
Width	18'-0"
Height	6'-0"
Border Width	2"
Border Radii	9"
Border Inset	
Background Color	Green
Legend/Border Color	White
Sheeting	DG3
Arrow Size (Angle)	
Station/Structure	

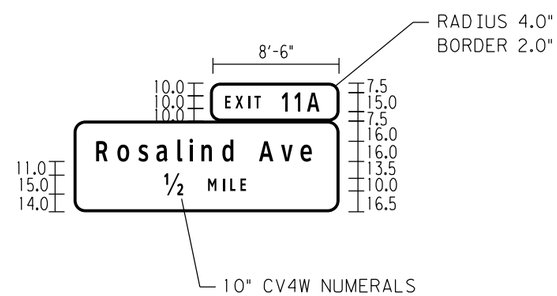

Copy	Spacing																					Length	Size/Series
	E	X	I	T		1	1	A														75.4	10/15 CV4W
13.3		29.8			12.5		33.1		13.3														
	R	o	s	a	l	i	n	d		A	v	e										176.7	16 CV5W
19.7				111.8					20		44.9		19.6										
	1/2		M	I	L	E																64	10 CV4W
76	20	12.5		31.5			76																

Sign	4
Quantity	
Width	24'-0"
Height	9'-6"
Border Width	2"
Border Radii	12"
Border Inset	
Background Color	Green
Legend/Border Color	White
Sheeting	DG3
Arrow Size (Angle)	
Station/Structure	

FABRICATOR SHALL ADJUST SPACING SUCH THAT NUMERALS AND FRACTIONS ARE VERTICALLY CENTERED ABOUT THE WIDEST IN EACH COLUMN. CENTERLINES ARE NOT PART OF THE SIGN FACE.

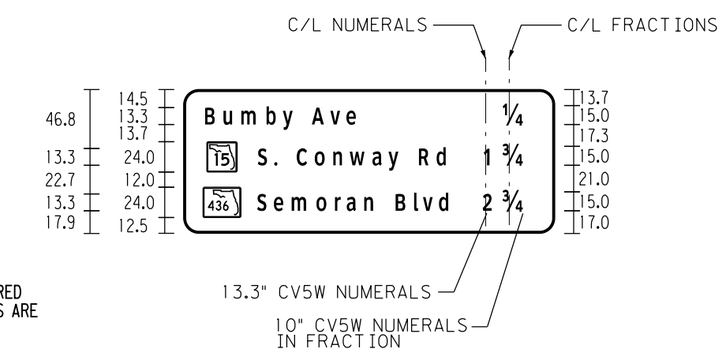

Copy	Spacing																											Length	Size/Series
	B	u	m	b	y		A	v	e		1/4																	257	13.3 CV5W
15		71.6				13.3		37.4		114.7	20	16																	
	15		S	.		C	o	n	w	a	y		R	d		1		3/4										258	13.3 CV5W
15	24	19.3	16.5		13.3			82.8				13.3		23.5	29	6	8.3	22	15										
	436		S	e	m	o	r	a	n		B	l	v	d		2		3/4										258	13.3 CV5W
15	30	13.3				94.2				13.3			43.8		25.6	9.1	6.7	22	15										

ROADWAY GUIDE SIGN EXAMPLES AND PREFERRED FORMAT

NOTES: WIDTH - HORIZONTAL SPACING DIMENSIONS ARE IN INCHES. END DIMENSIONS INCLUDE BORDER WIDTH, MARGIN AND BORDER RECESS.

REVISIONS					
DATE	BY	DESCRIPTION	DATE	BY	DESCRIPTION

CENTRAL FLORIDA EXPRESSWAY AUTHORITY

GUIDE SIGN WORKSHEET SIGNS 1, 2, 3, 4

PROJECT	SHEET NO.
STANDARDS	4

Sign	5
Quantity	
Width	22'-6"
Height	15'-0"
Border Width	2"
Border Radii	12"
Border Inset	
Background Color	Green/Blue/Yellow
Legend/Border Color	White/Black
Sheeting	DG3
Arrow Size (Angle)	22.25"x35.0", 45°
Station/Structure	

TRADITIONAL PANEL DESIGN TO BE USED ONLY AS DIRECTED BY THE AUTHORITY

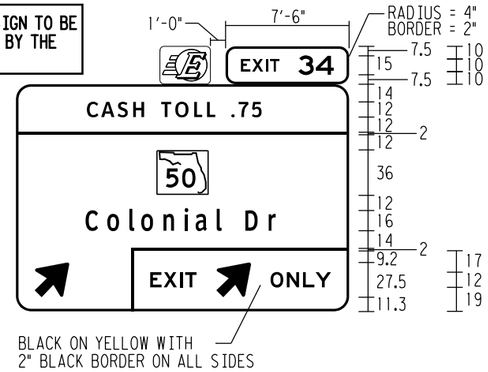

1. HORIZONTAL SPACING BETWEEN BLACK LETTERS ON YELLOW BACKGROUND HAS BEEN INCREASED BY 10%.

2. USE EPASS LOGO EP-7.

Copy Spacing																						Length	Size/Series
	E	X	I	T		3	4															66.3	10/15 CV4W
11.9	29.8				12.5	24		11.8															
	C	A	S	H		T	O	L	L		.	7	5									138.5	12 CV4W
65.7	44				15	41.3			15	23.2			65.8										
	50																						
114	42	114																					
	C	o	l	o	n	i	a	l		D	r											155.3	16 CV5W
57.4	109.4								20	25.9		57.3											
	↗		I		E	X	I	T		↗		O	N	L	Y							238	12 EM
18	27.5	46.9	2	12	37.6				18	27.5	18	48.5				14							

Sign	6
Quantity	
Width	15'-6"
Height	7'-6"
Border Width	2"
Border Radii	11"
Border Inset	
Background Color	Green
Legend/Border Color	White
Sheeting	DG3
Arrow Size (Angle)	32.0"X22.0"
Station/Structure	

1. HORIZONTAL SPACING BETWEEN BLACK LETTERS ON YELLOW BACKGROUND HAS BEEN INCREASED BY 10%.

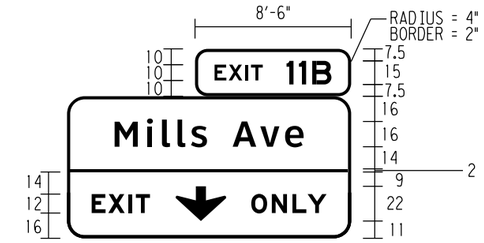

Copy Spacing																						Length	Size/Series
	E	X	I	T		1	1	B														74.7	10/15 CV4W
13.6	29.8				12.5	32.4			13.7														
	M	i	l	l	s		A	v	e													123.7	16 CV5W
31.2	58.8					20	44.9			31.1													
	E	X	I	T		↓		O	N	L	Y											154.1	12 EM
16	37.6				18	32	18	48.5				15.9											

Sign	7
Quantity	
Width	12'-0"
Height	12'-0"
Border Width	
Border Radii	
Border Inset	
Background Color	Green
Legend/Border Color	White
Sheeting	DG3
Arrow Size (Angle)	
Station/Structure	

OVERLAY SIZE: 9'0"X2'-0"

ORIGINAL PANEL IN TRADITIONAL FONT

Copy Spacing																						Length	Size/Series
	E	X	I	T		2	2															72	10/15 E
36	30.6				15	26.4		36															

Existing Sign

Sign	8
Quantity	
Width	10'-6"
Height	6'-0"
Border Width	2"
Border Radii	9"
Border Inset	
Background Color	Green
Legend/Border Color	White
Sheeting	DG3
Arrow Size (Angle)	12"x8.0
Station/Structure	

CONSULTANT TO USE 2" BORDER REGARDLESS OF TOTAL PANEL AREA (SF)

EXAMPLE - CROSSROAD DIRECTION SIGN

Copy Spacing																						Length	Size/Series
	50																						
48	30	48																					
	C	o	l	o	n	i	a	l		D	r											77.5	8 CV5W
24.3	54.6								10	12.9		24.2											
	←		W	E	S	T		E	A	S	T		→									106	8/6 CV4W
10	12	8	25				17.4	23.6				8	12	10									

ROADWAY GUIDE SIGN EXAMPLES AND PREFERRED FORMAT

NOTES: WIDTH - HORIZONTAL SPACING DIMENSIONS ARE IN INCHES. END DIMENSIONS INCLUDE BORDER WIDTH, MARGIN AND BORDER RECESS.

REVISIONS					
DATE	BY	DESCRIPTION	DATE	BY	DESCRIPTION

CENTRAL FLORIDA EXPRESSWAY AUTHORITY

GUIDE SIGN WORKSHEET
SIGNS 5, 6, 7, 8

PROJECT	SHEET NO.
STANDARDS	5

Sign	9
Quantity	
Width	10'-6"
Height	5'-6"
Border Width	2"
Border Radii	8"
Border Inset	
Background Color	Green
Legend/Border Color	White
Sheeting	DG3
Arrow Size (Angle)	16"x10.6"
Station/Structure	

EXAMPLE - DESTINATION DIRECTION SIGN

Copy Spacing																						Length	Size/Series
	←		M	a	i	t	l	a	n	d													
11.4	16	13	74.2								11.4											103.2	10.67 CV5W
	A	p	o	p	k	a		→															
16.1	64.9						13	16	16													93.9	10.67 CV5W

Sign	10
Quantity	
Width	10'-0"
Height	2'-0"
Border Width	1"
Border Radii	3"
Border Inset	
Background Color	Green
Legend/Border Color	White
Sheeting	DG3
Arrow Size (Angle)	
Station/Structure	

EXAMPLE - CROSSROAD STREET NAME SIGN

Copy Spacing																						Length	Size/Series
	C	r	y	s	t	a	l		L	a	k	e		D	r								
8.5	45.4							8	28.6				8	13		8.5						103	8 CV5W

Sign	11
Quantity	
Width	12'-6"
Height	8'-0"
Border Width	2"
Border Radii	12"
Border Inset	
Background Color	GREEN
Legend/Border Color	WHITE
Sheeting	DG3
Arrow Size (Angle)	
Station/Structure	

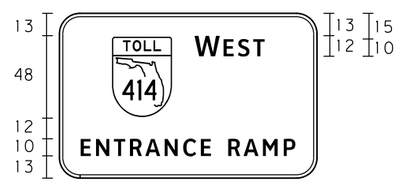

Copy Spacing																						Length	Size/Series
	TOLL 414		W	E	S	T																	
30.1	36	12	41.9				30															89.9	12/10 CV4W
	E	N	T	R	A	N	C	E		R	A	M	P										
11.1	76.1								12.5	39.2				11.1								127.8	10 CV4W

Sign	
Quantity	
Width	
Height	
Border Width	
Border Radii	
Border Inset	
Background Color	
Legend/Border Color	
Sheeting	
Arrow Size (Angle)	
Station/Structure	

INTENTIONALLY LEFT BLANK

Copy Spacing	Length	Size/Series

ROADWAY GUIDE SIGN EXAMPLES AND PREFERRED FORMAT

NOTES: WIDTH - HORIZONTAL SPACING DIMENSIONS ARE IN INCHES. END DIMENSIONS INCLUDE BORDER WIDTH, MARGIN AND BORDER RECESS.

REVISIONS

DATE	BY	DESCRIPTION	DATE	BY	DESCRIPTION

CENTRAL FLORIDA EXPRESSWAY AUTHORITY

GUIDE SIGN WORKSHEET SIGNS 9, 10, 11

PROJECT	SHEET NO.
STANDARDS	6

Sign	12	EXIT	ONLY
Quantity	1		
Width	35'-6"	50"	60"
Height	19'-6"	18"	18"
Border Width	2"		
Border Radii	12"	2"	2"
Border Inset			
Background Color	Green	Yellow	Yellow
Legend/Border Color	White	Black	Black
Sheeting	DG3	DG3	DG3
Arrow Size (Angle)			
Station/Structure			

1. PANEL HAS BEEN DESIGNED TO ACCOMMODATE FUTURE COPY.

2. HORIZONTAL SPACING BETWEEN BLACK LETTERS ON YELLOW BACKGROUND HAS BEEN INCREASED BY 10%.

3. EXIT PANEL BORDER:
   WIDTH = 2"
   RADIUS = 4"

4. TOLL ROUTE SHIELD TO BE USED IS TM.

5. EXIT ONLY INSETS SHALL NOT HAVE A BORDER. CORNERS OF YELLOW BACKGROUND SHALL HAVE A 2" RADIUS.

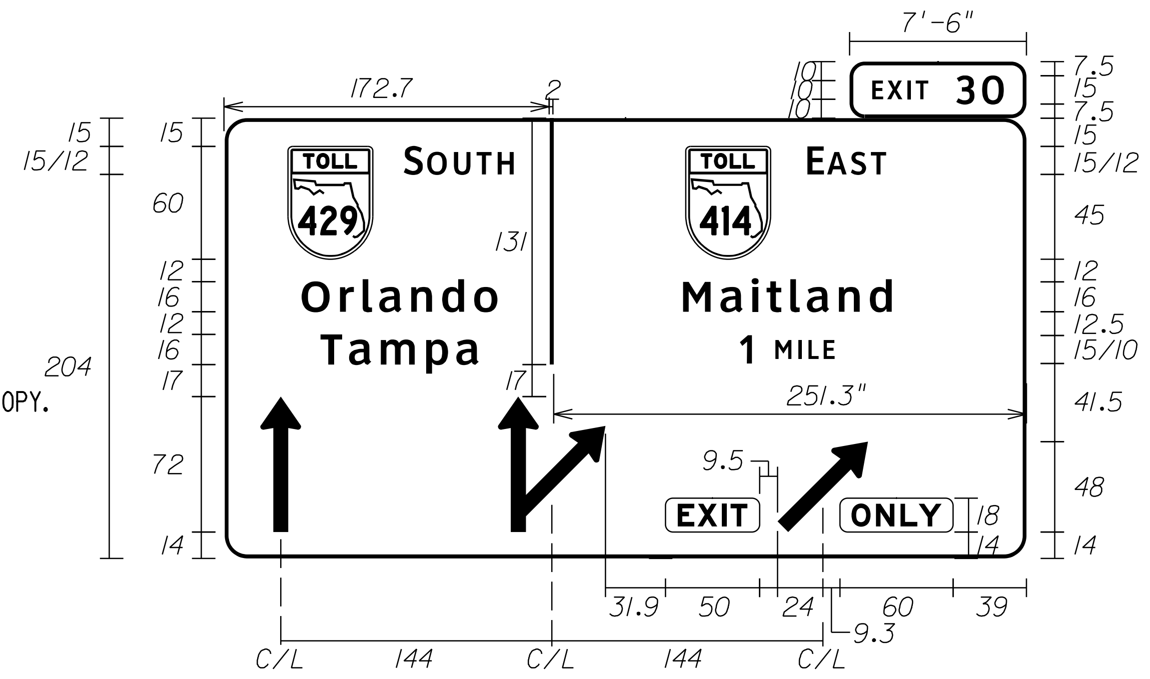

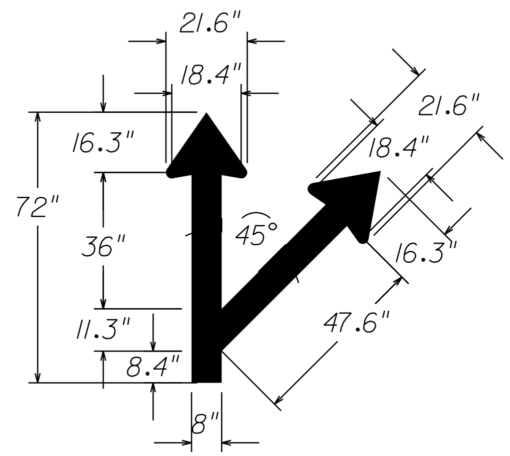

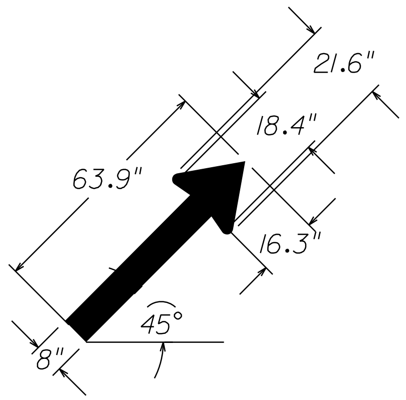

Copy Spacing

																				Length	Size/Series
	E	X	I	T		3	0													67.4	15/12 CV4W
11.3	29.7				12.5	25.2		11.3													
	429		S	O	U	T	H		|		414		E	A	S	T				326.4	15/12 CV4W
25.9	48	15	59.9					23.9	2	71.6	48	15	43				73.7				
	O	r	l	a	n	d	o		|		M	a	i	t	l	a	n	d		319.3	16 CV5W
35.4	103.9							33.4	2	69.2	110.8								71.3		
	T	a	m	p	a		|		1		M	I	L	E						279.2	16 CV5W 10/15 CV4W
45.3	84.1					43.3	2	99.5	6.3	12.5	31.5				101.5						
	↑		↑↗		↗																
18.9	21.6	104.6	57.2	91.4	48	84.3															
	E	X	I	T																37.6	12 EM
6.2	37.6				6.2																
	O	N	L	Y																48.5	12 EM
5.8	48.5				5.7																

NOTES TO CONSULTANT:

1. EXAMPLE PANEL IS DESIGNED TO ACCOMMODATE A FUTURE DESTINATION. WHEN ALL DESTINATIONS ARE INCLUDED WITH OR WITHOUT MILEAGE, THE CONSULTANT IS RESPONSIBLE FOR ADJUSTING THE OVERALL WIDTH AND HEIGHT OF THE PANEL.

2. WHEN ALL DESTINATIONS ARE INCLUDED WITHOUT MILEAGE, THE 17" VERTICAL DIMENSION SHOULD BE REDUCED BUT SHALL STILL MEET MUTCD CRITERIA IN TABLE 2E-5.

ROADWAY GUIDE SIGN EXAMPLES AND PREFERRED FORMAT

NOTES: WIDTH - HORIZONTAL SPACING DIMENSIONS ARE IN INCHES. END DIMENSIONS INCLUDE BORDER WIDTH, MARGIN AND BORDER RECESS.

USER: STOD3416 10/23/2014 11:18:08 AM T:\Cadd\CFXway Standards 2014\gswksp01_arrow-per-lane.dgn

REVISIONS					
DATE	BY	DESCRIPTION	DATE	BY	DESCRIPTION

CENTRAL
FLORIDA
EXPRESSWAY
AUTHORITY

GUIDE SIGN WORKSHEET
SIGN 12

PROJECT	SHEET NO.
STANDARDS	7

Sign	13
Quantity	
Width	26'-6"
Height	14'-6"
Border Width	2"
Border Radii	12"
Border Inset	0"
Background Color	Green
Legend/Border Color	White
Sheeting	DG3
Arrow Size (Angle)	
Station/Structure	

1. FOR USE AT TOLLED RAMPS.

2. CONSULTANT TO ADD MILEAGE AS NEEDED.

EXIT PANEL:
RADIUS = 4"
BORDER = 2"

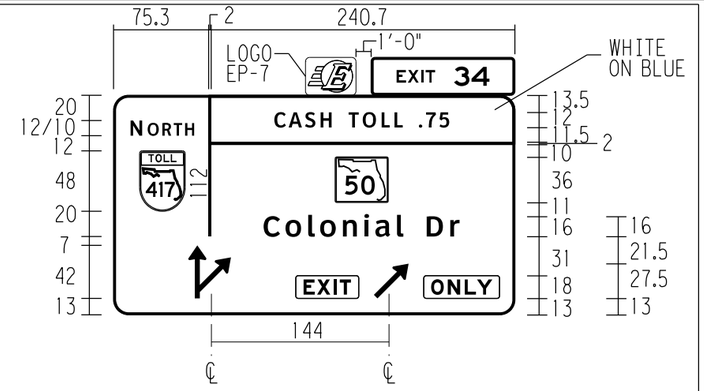

Copy Spacing																						Length	Size/Series
	|		C	A	S	H		T	O	L	L		.	7	5							190.6	12 CV4W
75.3	2	50.1		44			15		41.3			15		23.2		52.1							
	N	O	R	T	H		|														63.9	12/10 CV4W
13.4			50.5			11.4	2	240.7															
	417		|		50																285.3	
20.7	36	18.6	2	98.3	42	100.4																	
	|		C	o	l	o	n	i	a	l		D	r									199	16 CV5W
75.3	2	41.7				109.4					20	25.9		43.7									
	↱		E	X	I	T		↗		O	N	L	Y									246.6	12 CV4W
59.4	33.8	51.3		50			12	27.5	12		60			12									

Sign	14
Quantity	
Width	25'-6"
Height	12'-6"
Border Width	2"
Border Radii	12"
Border Inset	
Background Color	Green
Legend/Border Color	White
Sheeting	DG3
Arrow Size (Angle)	
Station/Structure	

1. FOR USE AT NON-TOLLED RAMPS.

2. CONSULTANT TO ADD MILEAGE AS NEEDED.

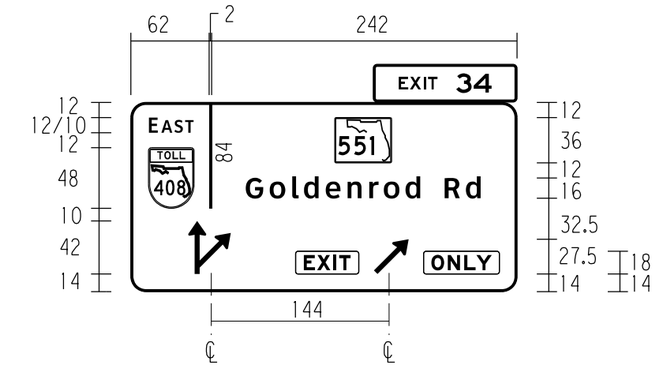

Copy Spacing																						Length	Size/Series
	E	A	S	T		|															49.7	12/10 CV4W
14.3		35.4			12.3	2	242																
	408		|		551																	192.5	
14	36	12	2	97.5	45	99.5																	
	|		G	o	l	d	e	n	r	o	d		R	d								215.1	16 CV5W
62	2	27					137.6					20	28.5		28.9								
	↱		E	X	I	T		↗		O	N	L	Y									246.6	12 EM
45.4	33.8	51.3		50			12	27.5	12		60			14									

Sign	EXIT	ONLY
Quantity		
Width	50"	60"
Height	18"	18"
Border Width		
Border Radii		
Border Inset		
Background Color	Yellow	Yellow
Legend/Border Color	Black	Black
Sheeting	DG3	DG3
Arrow Size (Angle)		
Station/Structure		

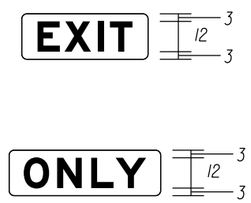

1. SPACING BETWEEN BLACK LETTERS HAS BEEN INCREASED BY 10%.

2. EXIT AND ONLY SHALL NOT HAVE A BORDER.
CORNERS OF YELLOW BACKGROUND TO HAVE A 2" RADIUS.

Copy Spacing																						Length	Size/Series
	E	X	I	T																		37.6	12 EM
6.2		37.6			6.2																		
	O	N	L	Y																		48.5	12 EM
5.8		48.5			5.7																		

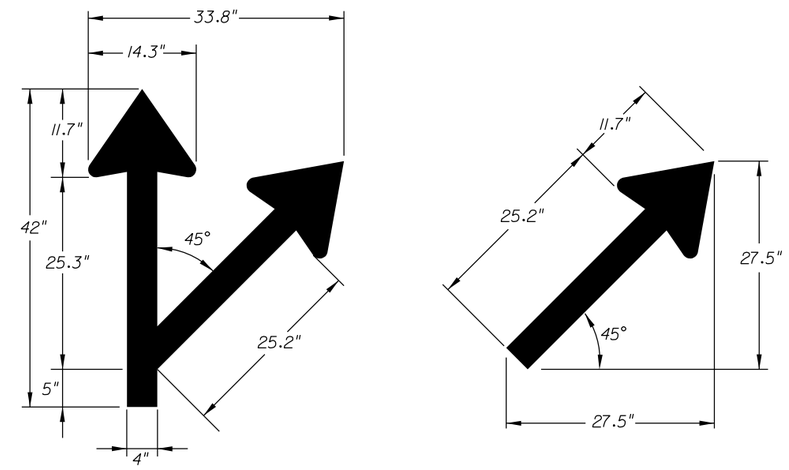

ARROW DETAILS
SIGNS 13, 14

NOTES: WIDTH - HORIZONTAL SPACING DIMENSIONS ARE IN INCHES. END DIMENSIONS INCLUDE BORDER WIDTH, MARGIN AND BORDER RECESS.

ROADWAY GUIDE SIGN EXAMPLES AND PREFERRED FORMAT

REVISIONS					
DATE	BY	DESCRIPTION	DATE	BY	DESCRIPTION

CENTRAL FLORIDA EXPRESSWAY AUTHORITY

GUIDE SIGN WORKSHEET
SIGNS 13, 14

PROJECT	SHEET NO.
STANDARDS	8

SIGN E5-1a
6'-0" x 5'-0"

QTY REQ'D ____

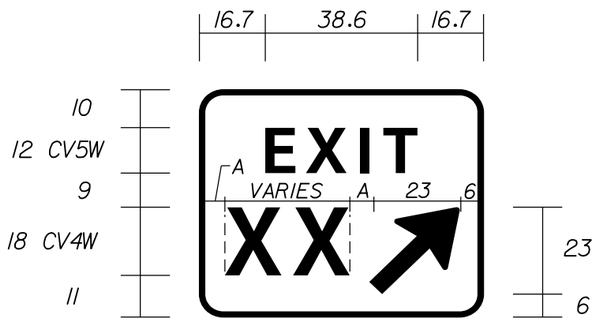

SIGN E5-1ab
6'-0" x 5'-0"

QTY REQ'D ____

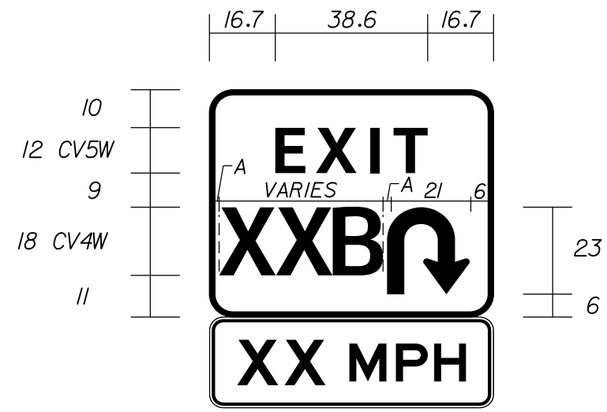

SIGN E5-1ac
6'-0" x 5'-0"

QTY REQ'D ____

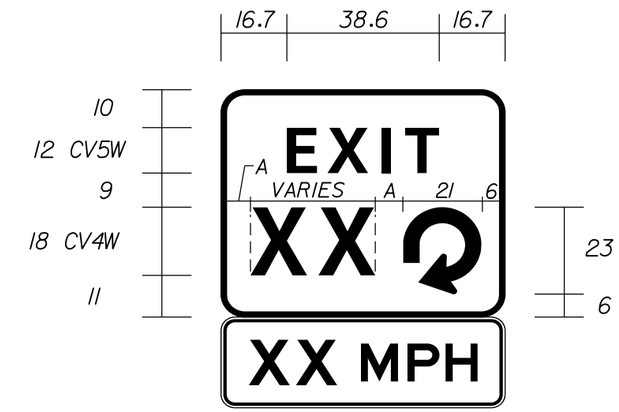

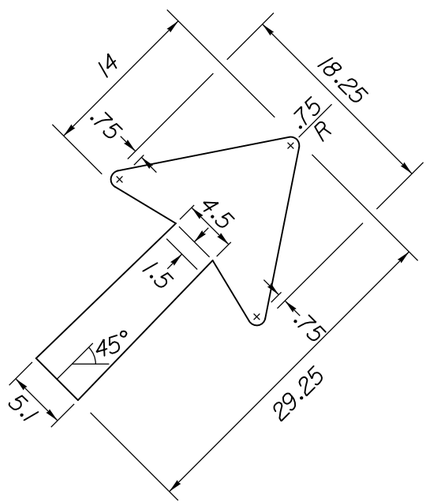

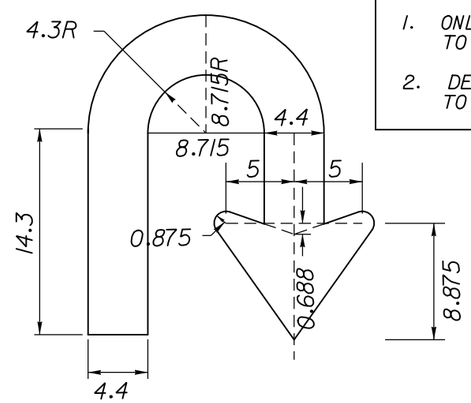

NOTES TO CONSULTANT:

1. ONLY SHOW DETAILS APPLICABLE TO PROJECT.
2. DELETE BOX AND NOTES PRIOR TO INCLUDING IN PLANS.

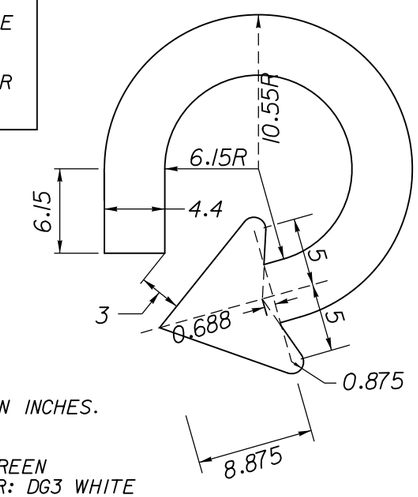

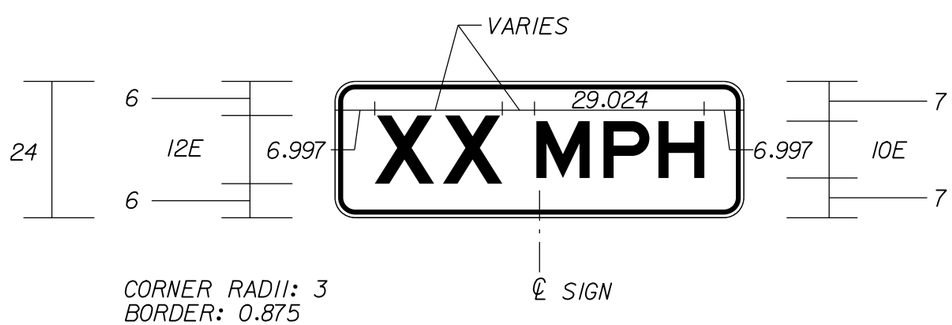

CORNER RADII: 3
BORDER: 0.875
INSET: 0.625

SIGN E13-1P
6'-0" x 2'-0"

NOTES:

1. ALL DIMENSIONS ARE IN INCHES.
2. EXIT GORE PANEL:
   BACKGROUND: DG3 GREEN
   LEGEND AND BORDER: DG3 WHITE
   CORNER RADII: 6"
   BORDER: 1.5"
3. A = FABRICATOR SHALL OPTICALLY LOCATE NUMERALS OR NUMERALS AND SUFFIX EQUIDISTANT FROM THE INSIDE EDGE OF BORDER AND ARROW.
4. SHOP DRAWINGS ARE REQUIRED.
5. USE STANDARD E13-1P FROM THE FHWA STANDARD HIGHWAY SIGNS AND MARKING BOOK, 2012 SUPPLEMENT, WITH SPEED LIMIT(S) AS SHOWN IN PLANS. LENGTH SHALL NOT EXCEED 6'-0".
6. E13-1P:
   BACKGROUND: DG3 FLUORESCENT YELLOW
   LEGEND AND BORDER: DG3 BLACK

REVISIONS

DATE	BY	DESCRIPTION	DATE	BY	DESCRIPTION

CENTRAL FLORIDA EXPRESSWAY AUTHORITY

EXIT GORE SIGNS
SIGNS E5-1a, E5-1ab, E5-1ac

PROJECT: STANDARDS

SHEET NO. 9

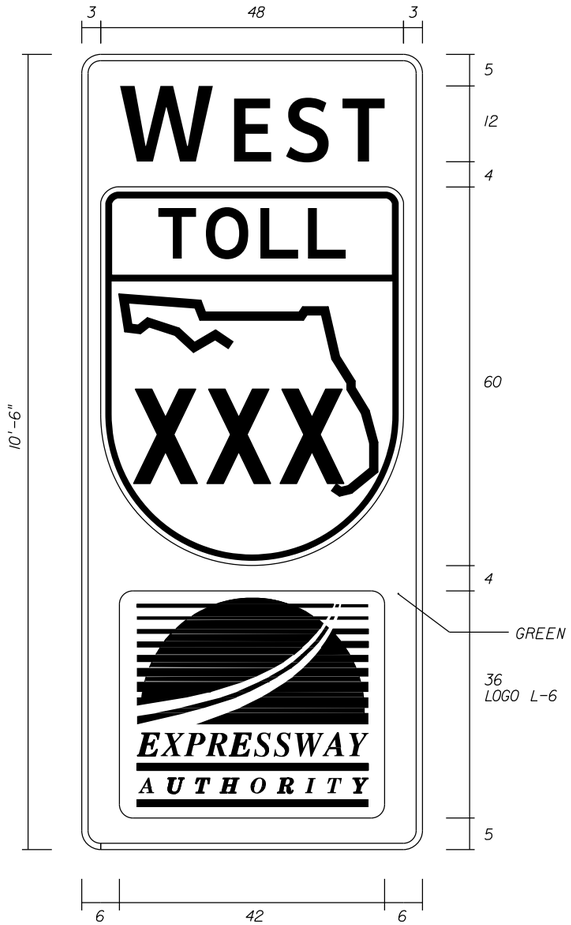

SIGN XX

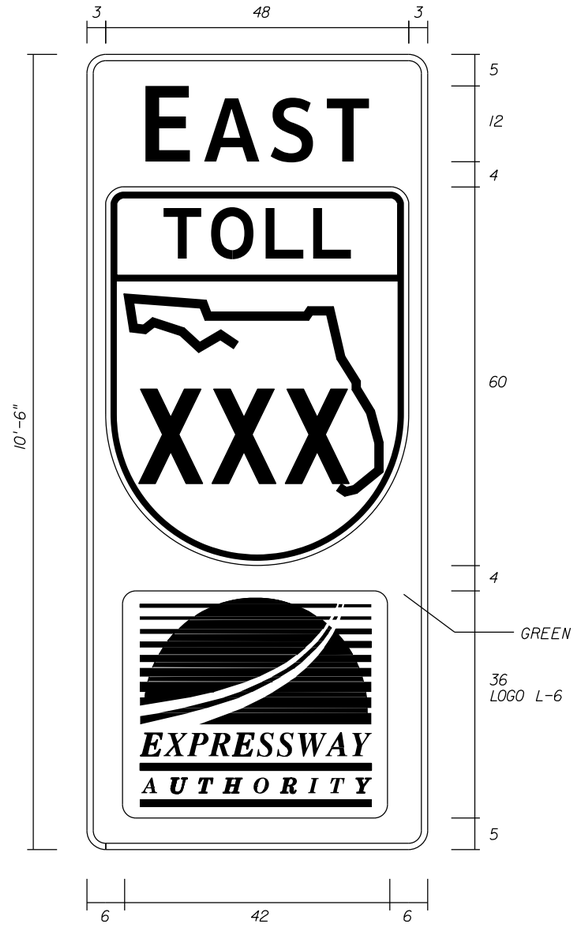

SIGN XX

1. PANELS SHALL BE FABRICATED USING 3M COMPANY DIAMOND GRADE CUBED (DG3) SHEETING OR AUTHORITY APPROVED EQUAL.
2. MAIN PANEL:
   - BACKGROUND: GREEN
   - BORDER: WHITE
   - BORDER WIDTH: 1"
   - CORNER RADII: 3"
3. CARDINAL DIRECTION: WHITE
4. MAKE FIRST LETTER OF CARDINAL DIRECTION 20% LARGER MINIMUM. ALL LETTERS ARE BOTTOM JUSTIFIED.
5. TOLL SHIELD SPECIAL COLORS:
   ORANGE: 3M COMPANY EC FILM NO. 1174 OR AUTHORITY APPROVED EQUAL.
6. LOGO L-6 SHALL BE CENTERED WITHIN A 42"x36" WHITE RECTANGLE. THE WHITE RECTANGLE SHALL BE USED IN VERTICAL AND HORIZONTAL PANEL DIMENSIONING.
7. GRAPHIC FILES FOR THE TOLL SHIELD AND LOGO CAN BE PROVIDED FOR USE IN FABRICATION UPON REQUEST.
8. FABRICATOR SHALL APPLY AS THE TOP LAYER, 3M COMPANY EC FILM 1170 CLEAR ON THE AUTHORITY DESIGNATED ORANGE. INSTALLATION SHALL BE PART OF A 3M MATCHED COMPONENT SYSTEM AND MEET ALL 3M SIGN FABRICATION REQUIREMENTS. CONTACT 3M COMPANY 1-800-553-1380.
9. ALL DIMENSIONS ON SHEET ARE IN INCHES.
10. IF A COLOR AND/OR SHEETING OTHER THAN THOSE NOTED SPECIFICALLY AS 3M COMPANY PRODUCTS ARE TO BE USED, CONTRACTOR SHALL PROVIDE A 4" X 4" SAMPLE IN ALL COLORS. NO FABRICATION SHALL COMMENCE UNTIL THE SAMPLE HAS BEEN REVIEWED AND WRITTEN ACCEPTANCE RECEIVED FROM THE AUTHORITY. SEE GENERAL NOTES FOR ADDITIONAL REQUIREMENTS.
11. DETAILED SHOP DRAWINGS ARE REQUIRED. ONE REPRESENTATIVE SHOP DRAWING PER CARDINAL DIRECTION MAY BE SUBMITTED PROVIDED THE APPROPRIATE QUANTITY IS SHOWN PER DIRECTION.
12. FABRICATOR SHALL USE STATE OUTLINE CONFIGURATION SHOWN IN TOLL SHIELD DETAIL.
13. FABRICATOR TO REDUCE CARDINAL DIRECTION COPY SPACING AS NEEDED TO MEET SPECIFIED LENGTHS.
14. FABICATOR SHALL USE STANDARD HORZIONTAL SPACING FOR NUMERALS IN ROUTE SHIELD WHEN POSSIBLE. FABICATOR SHALL OPTICALLY ADJUST NUMERAL SPACING AS NEEDED TO PREVENT OVERLAP ONTO THE STATE OUTLINE OR SHIELD BORDER.

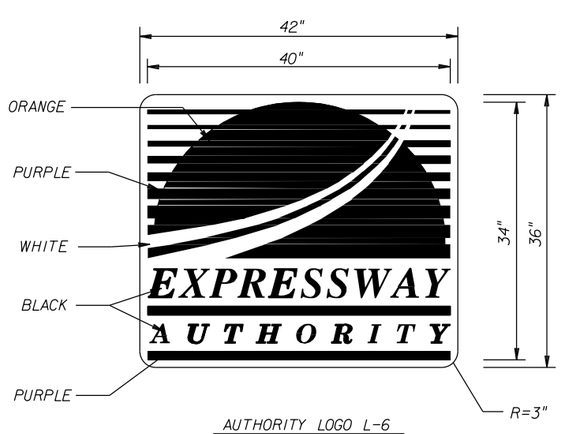

AUTHORITY LOGO L-6

COPY SPACING			SIZE/SERIES
	WEST		12/10 CV4W
6.1	41.9	6	
	EAST		12/10 CV4W
9.3	35.4	9.3	
	NORTH		12/10 CV3W
4.0	46	4.0	
	SOUTH		12/10 CV3W
4.5	45	4.5	

NOTES TO CONSULTANT:

1. INSERT CORRECT ROUTE NUMBER.
2. INSERT PROJECT SPECIFIC SIGN NUMBERS.
3. ONLY SHOW CARDINAL DIRECTIONS AND DATA APPLICABLE TO PROJECT.
4. DELETE THIS BOX AND NOTES PRIOR TO INCLUDING SHEET IN PLANS.

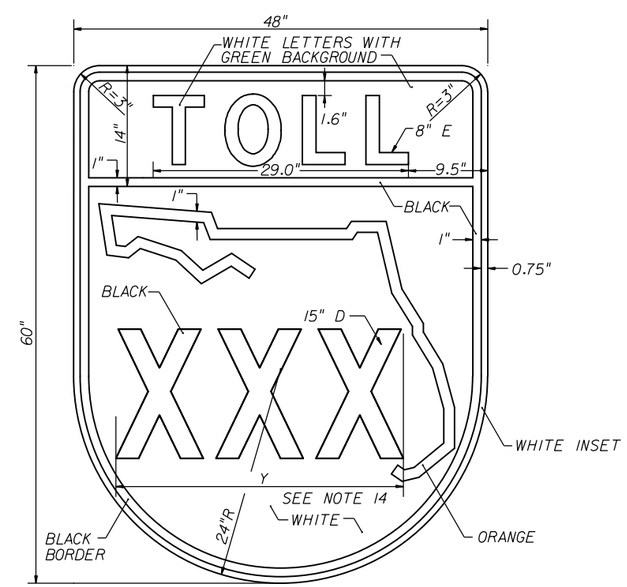

REVISIONS					
DATE	BY	DESCRIPTION	DATE	BY	DESCRIPTION

CENTRAL FLORIDA EXPRESSWAY AUTHORITY

SPECIAL DESIGN
ROUTE CONFIRMATION MARKERS
SIGNS XX, XX

PROJECT	SHEET NO.
STANDARDS	10

USER: STOD3416 10/23/2014 11:18:15 AM T:\Cadd\CFXway Standards 2014\A4-05.dgn

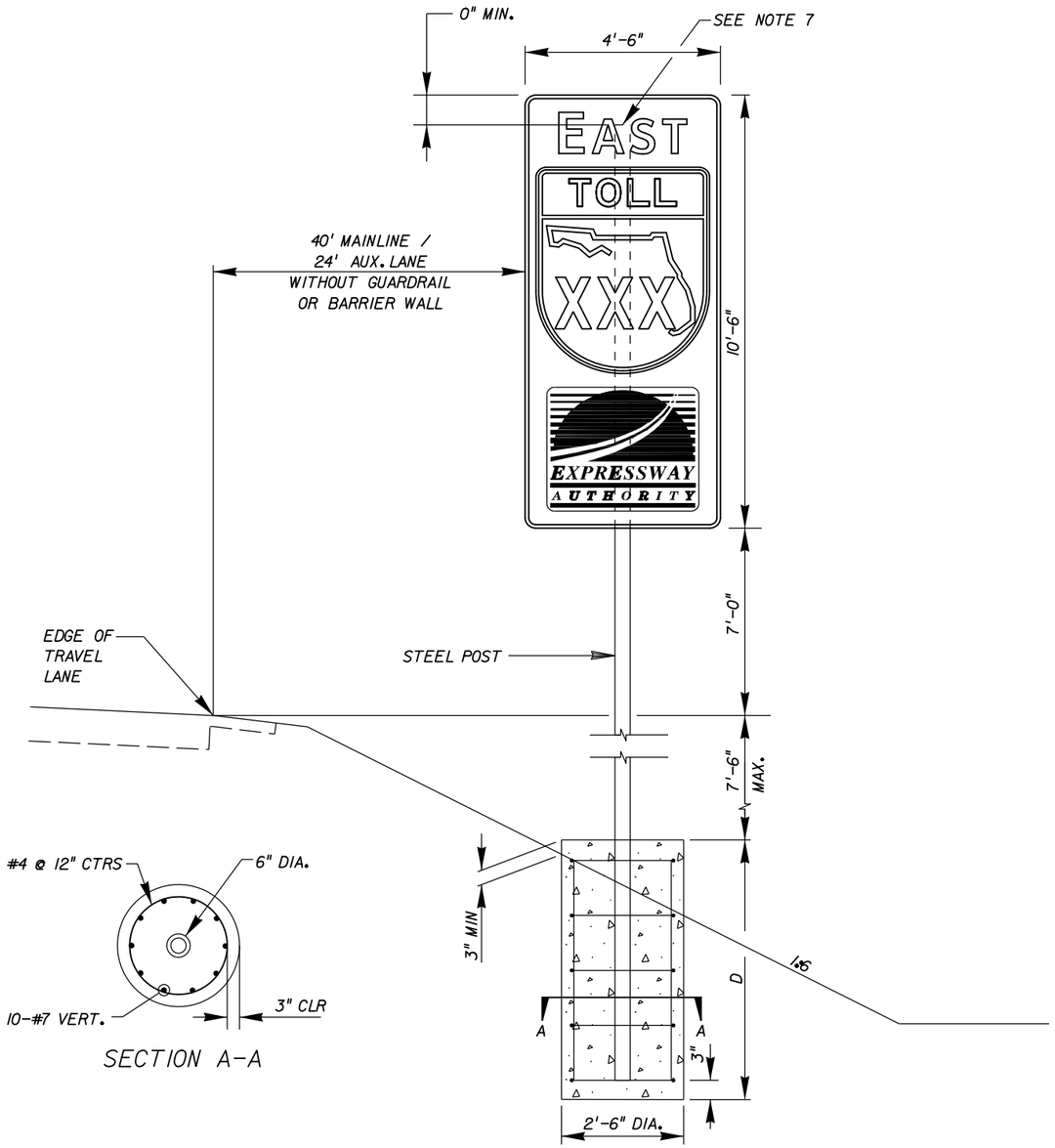

GM-XX, GM-XX, GM-XX

NOTES:

1. DESIGN ACCORDING TO FDOT STRUCTURES MANUAL XXXX.

2. MATERIAL:

   A. STEEL POST SHALL CONFORM TO ASTM A500 GRADE B (Fy = 42 KSI), ROUND HSS 6x0.5 HOT DIPPED GALVANIZED PER ASTM A123.

   B. REINFORCING STEEL SHALL CONFORM TO ASTM A615 GRADE 60.

   C. CONCRETE SHALL BE CLASS II, f'c= 3400 PSI IN ACCORDANCE WITH FDOT SPECIFICATION SECTION 346

3. FOUNDATION: SEE GENERAL NOTES, FOUNDATION, IN INDEX 11200.

4. SOIL PROPERTIES USED IN DESIGN:

   A. SOIL UNIT WEIGHT: 50 PCF

   B. SOIL INTERNAL FRICTION ANGLE: 30 DEGREES

5. SIGN ATTACHMENT BRACKETS SHALL BE IN ACCORDANCE WITH FDOT ROADWAY INDEX 11860.

   Sign 4'-6" x 10'-6" : 5 BRACKETS

6. SHOP DRAWINGS: SUBMIT SHOP DRAWINGS FOR THE ASSEMBLY.

7. PROVIDE ¼" THICK STEEL CAP ON TOP OF POST AND WELD AROUND TO THE POST.

DIM	SLOPE * 1:6	SLOPE * 1:2
D	9'-6"	11'-0"

NOTES TO CONSULTANT:

1. STRUCTURAL DESIGN INFORMATION SHOWN IS FOR EXAMPLE PURPOSES ONLY. CONSULTANT IS FULLY RESPONSIBLE FOR PROJECT SPECIFIC STRUCTURE DESIGN(S). CONSULTANT SHALL DESIGN ROUTE CONFIRMATION MARKERS FOR SINGLE POST MOUNTING.

2. CONSULTANT TO SHOW APPLICABLE STRUCTURE NUMBERS (GM-XX) ASSOCIATED WITH EACH DESIGN. IF MULTIPLE DESIGNS ARE REQUIRED, DATA AND ASSOCIATED STRUCTURES MAY BE SHOWN IN TABULAR FORMAT ON SHEET.

3. CONSULTANT TO REVISE CARDINAL DIRECTION AND SHOW ROUTE NUMBER SPECIFIC TO PROJECT.

4. CONSULTANT SHALL REVISE NOTE 1 TO INCLUDE APPLICABLE FDOT STRUCTURES MANUAL EDITION.

5. DELETE THIS BOX AND NOTES PRIOR TO INCLUDING SHEET IN PLANS.

REVISIONS

DATE	BY	DESCRIPTION	DATE	BY	DESCRIPTION

CENTRAL FLORIDA EXPRESSWAY AUTHORITY

SPECIAL DESIGN
ROUTE CONFIRMATION MARKERS
STRUCTURAL DESIGN (EXAMPLE)

PROJECT	SHEET NO.
STANDARDS	11

SR XXX MILEPOSTS			
M.P. NO.	PROP. STATION	AS-BUILT STATION	LOCATION REFERENCE POINT
30	502+10		OT-2 STATION 505+60
30.5	527+00		RIGHT SIDE APPROACH BARRIER OF NB BRIDGE OVER RAMP DB STATION 527+10
31	554+90		OT-4 STATION 551+90

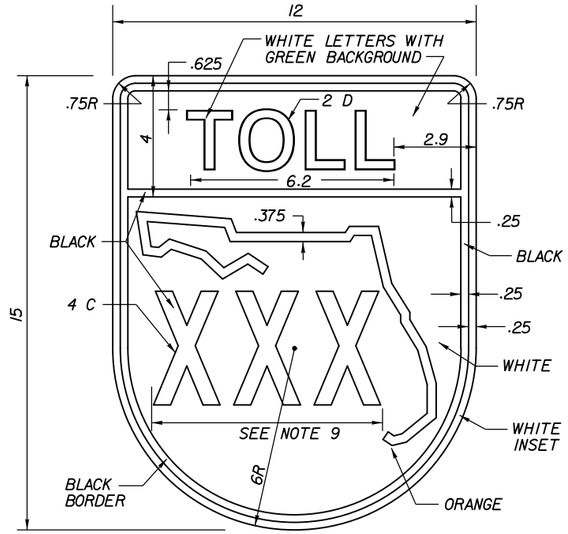

NOTES TO CONSULTANT:

1. INFORMATION SHOWN IN TABLE IS FOR EXAMPLE PURPOSES ONLY. CONSULTANT SHALL REVISE AS NEEDED FOR SPECIFIC PROJECT.
2. ONLY SHOW INFORMATION RELATIVE TO SPECIFIC PROJECT.
3. DELETE THIS BOX AND NOTES PRIOR TO INCLUDING SHEET IN PLANS.

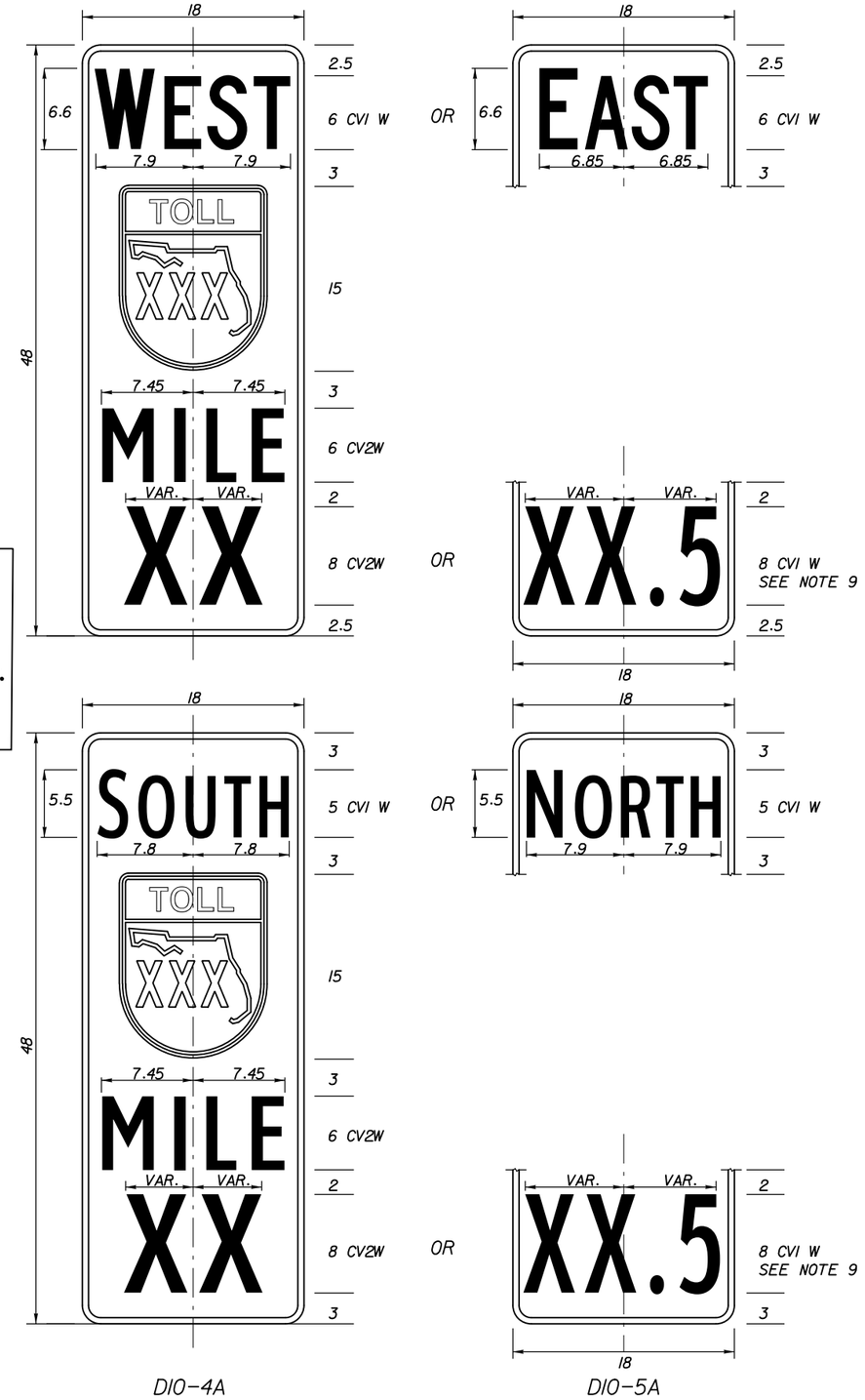

DIO-4A

DIO-5A

NOTES:

1. PANELS SHALL BE FABRICATED USING 3M COMPANY DIAMOND GRADE CUBED (DG3) SHEETING OR AUTHORITY APPROVED EQUAL.
2. MAIN PANEL:
   BACKGROUND: GREEN
   LEGEND AND BORDER: WHITE
   BORDER WIDTH: 0.5"
   CORNER RADII: 1.5"
3. MAKE FIRST LETTER OF CARDINAL DIRECTION 10% LARGER (AS SHOWN). ALL LETTERS ARE BOTTOM JUSTIFIED.
4. TOLL SHIELD COLORS:
   BLACK
   WHITE
   GREEN
   ORANGE: 3M COMPANY EC FILM NO. 1174 OR AUTHORITY APPROVED EQUAL.
5. FABRICATOR SHALL APPLY AS THE TOP LAYER, 3M COMPANY EC FILM 1170 CLEAR ON THE AUTHORITY DESIGNATED ORANGE. INSTALLATION SHALL BE PART OF A 3M MATCHED COMPONENT SYSTEM AND MEET ALL 3M SIGN FABRICATION REQUIREMENTS. CONTACT 3M COMPANY 1-800-553-1380.
6. ALL DIMENSIONS ON SHEET ARE IN INCHES.
7. IF A COLOR AND/OR SHEETING OTHER THAN THOSE NOTED SPECIFICALLY AS 3M COMPANY PRODUCTS ARE TO BE USED, CONTRACTOR SHALL PROVIDE 4" X 4" SAMPLE IN ALL COLORS. NO FABRICATION SHALL COMMENCE UNTIL THE SAMPLE HAS BEEN REVIEWED AND WRITTEN ACCEPTANCE RECEIVED FROM THE AUTHORITY. SEE GENERAL NOTES FOR ADDITIONAL REQUIREMENTS.
8. OPTICALLY LOCATE MILEPOST NUMERALS IN BOTH FORMATS (XX AND XX.5) ABOUT THE CENTERLINE OF PANEL.
9. FABRICATOR TO ADJUST HORIZONTAL SPACING AS NECESSARY TO FIT. DO NOT OVERLAP ONTO STATE OUTLINE OR SHIELD BORDER.
10. DETAILED SHOP DRAWINGS ARE REQUIRED.
11. FABRICATOR SHALL USE THE STATE OUTLINE CONFIGURATION SHOWN IN THE TOLL SHIELD DETAIL.

REVISIONS					
DATE	BY	DESCRIPTION	DATE	BY	DESCRIPTION

CENTRAL FLORIDA EXPRESSWAY AUTHORITY

SPECIAL DESIGN MILEPOST DIO-4A, DIO-5A AND LOCATIONS TABLE

PROJECT	SHEET NO.
STANDARDS	12

NOTES TO CONSULTANT:

1. STRUCTURAL DESIGN INFORMATION SHOWN IS FOR EXAMPLE PURPOSES ONLY. CONSULTANT IS FULLY RESPONSIBLE FOR PROJECT SPECIFIC STRUCTURE DESIGN(S). CONSULTANT SHALL DESIGN JUNCTION ASSEMBLIES FOR SINGLE POST MOUNTING.

2. CONSULTANT TO SHOW APPLICABLE STRUCTURE NUMBERS (GM-XX) ASSOCIATED WITH EACH DESIGN. IF MULTIPLE DESIGNS ARE REQUIRED, DATA AND ASSOCIATED STRUCTURES MAY BE SHOWN IN TABULAR FORMAT ON SHEET.

3. CONSULTANT TO SHOW ROUTE NUMBER SPECIFIC TO PROJECT.

4. CONSULTANT SHALL REVISE NOTE 1 TO INCLUDE APPLICABLE FDOT STRUCTURES MANUAL EDITION.

5. DELETE THIS BOX AND NOTES PRIOR TO INCLUDING SHEET IN PLANS.

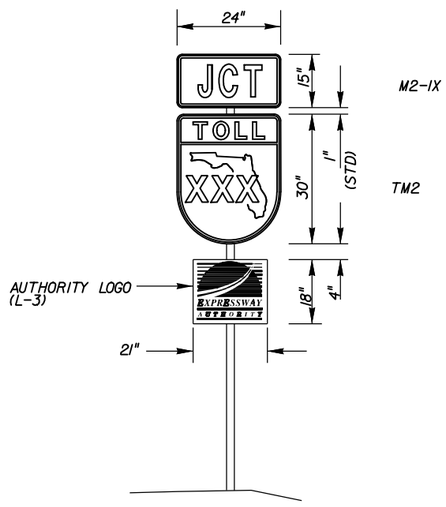

MINOR CROSSROAD JUNCTION ASSEMBLY

NOTES:

1. POST MATERIAL AND INSTALLATION PER FDOT DESIGN STANDARDS.

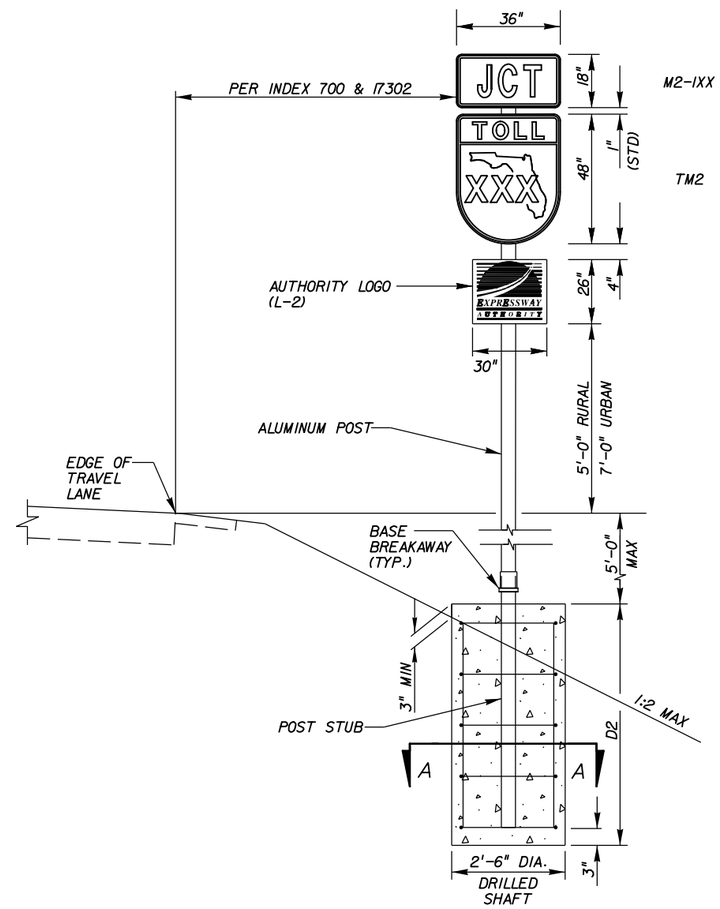

MAJOR AND INTERMEDIATE CROSSROAD JUNCTION ASSEMBLY

DIM	SLOPE * 1:4	SLOPE * 1:2
D2	7'-6"	9'-0"

NOTES:

1. DESIGN ACCORDIMG TO FDOT STRUCTURES MANUAL XXXX.

2. MATERIAL:

   A. ALUMINUM: SEE NOTES IN FDOT INDEX 11860. ALUMINUM COLUMN SIZE SHALL BE 6" DIAMETER WITH 1/4" WALL THICKNESS.

   B. REINFORCING STEEL SHALL CONFORM TO ASTM A615 GRADE 60.

   C. CONCRETE SHALL BE CLASS II, f'c= 3400 PSI IN ACCORDANCE WITH FDOT SPECIFICATION SECTION 346

3. FOUNDATION: SEE NOTE IN FDOT INDEX 11200.

4. SOIL PROPERTIES USED IN DESIGN:

   A. SOIL UNIT WEIGHT: 50 PCF

   B. SOIL INTERNAL FRICTION ANGLE: 30 DEGREES

5. SIGN ATTACHMENT BRACKETS SHALL BE IN ACCORDANCE WITH FDOT ROADWAY INDEX 11860.

   TOLL SHIELD: 60" x 48" (20 S.F.) AND 48" X 36" (12 S.F.)
   3 BRACKETS

   TOP AUXILIARY PANELS: 18" x 48" (6 S.F.) AND 18" X 36" (4.5 S.F.)
   2 BRACKETS

   AUTHORITY LOGO: (L-1) 34" x 40" (9.42 S.F.) AND (L-2) 26" X 30" (5.42 S.F.)
   2 BRACKETS.

6. SHOP DRAWINGS: SUBMIT SHOP DRAWINGS FOR THE ASSEMBLY.

7. FOR SLIP BASE CONNECTION SEE FDOT INDEX 11860.

USER: STOD3416 10/23/2014 11:18:17 AM T:\Cadd\CFXway Standards 2014\A4-06_B.dgn

REVISIONS					
DATE	BY	DESCRIPTION	DATE	BY	DESCRIPTION

CENTRAL FLORIDA EXPRESSWAY AUTHORITY

CROSSROAD JUNCTION ASSEMBLY - ALUMINUM

PROJECT	SHEET NO.
STANDARDS	13

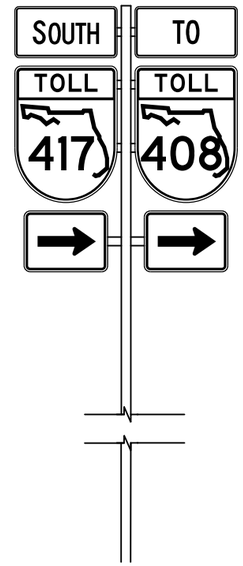

DETAIL A

SEPARATE AUXILIARY PANELS REQUIRED WITH EACH TOLL SHIELD

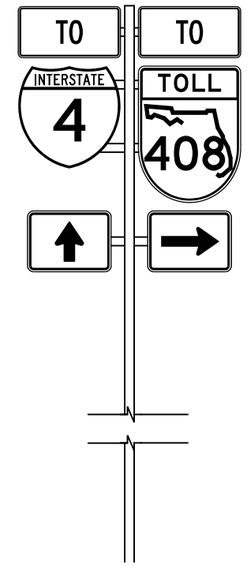

DETAIL B

SEPARATE AUXILIARY PANELS REQUIRED WITH EACH SHIELD

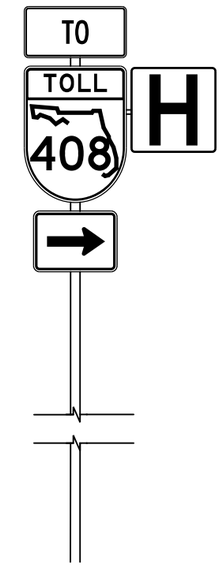

DETAIL C

LOCATION OF PLAQUES FOR GENERAL SERVICE, GENERAL INFORMATION, ETC

TOTAL AREA = 30 SF OR LESS

NOTES:

1. CONTRACTOR TO INSTALL THE TWO (2) SEPARATE SINGLE POST ASSEMBLIES SUCH THAT THE ASSEMBLIES ARE ALIGNED HORIZONTALLY AND ARE NOT STAGGERED.

2. EACH ASSEMBLY TO BE VERTICALLY PLUM.

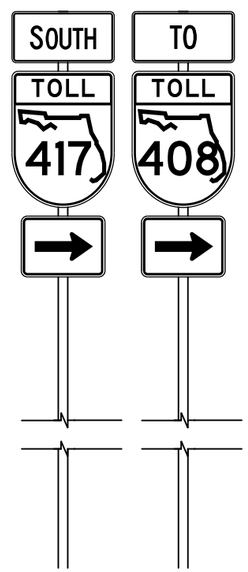

DETAIL D

SEPARATE SINGLE POST ASSEMBLIES

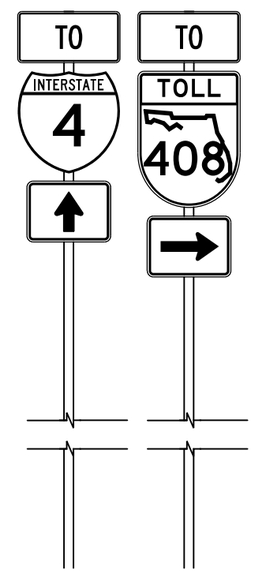

DETAIL E

SEPARATE SINGLE POST ASSEMBLIES

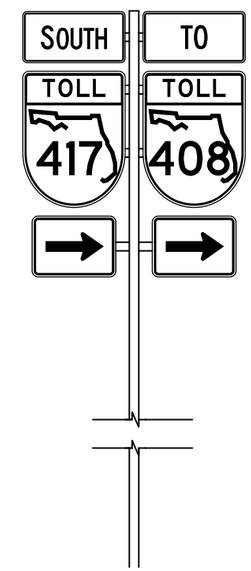

DETAIL F

SPECIAL DESIGN SINGLE POST ASSEMBLY

NOTES TO CONSULTANT:

1. COMPONENT PANELS SHALL NOT BE DOWN SIZED WITHOUT PRIOR APPROVAL FROM THE AUTHORITY.

2. IF TWO (2) SEPARATE SINGLE POST ASSEMBLIES CANNOT BE ACCOMODATED, CONSULTANT SHALL DESIGN A SPECIAL SINGLE POST ASSEMBLY AND INCLUDE STRUCTURAL DETAILS IN PLANS. THE SINGLE POST ASSEMBLY SHALL CONTAIN ALL COMPONENT PANELS FOR EACH LOCATION.

3. MULTI-POST ASSEMBLY TO BE USED ONLY WITH PRIOR APPROVAL FROM THE AUTHORITY.

4. CONSULTANT TO DELETE THIS BOX AND NOTES PRIOR TO INCLUDING SHEET IN PLANS.

TOTAL AREA = OVER 30 SF

REVISIONS					
DATE	BY	DESCRIPTION	DATE	BY	DESCRIPTION

CENTRAL FLORIDA EXPRESSWAY AUTHORITY

PREFERRED CONFIGURATION OF TRAILBLAZER COMPONENT PANELS

PROJECT	SHEET NO.
STANDARDS	14

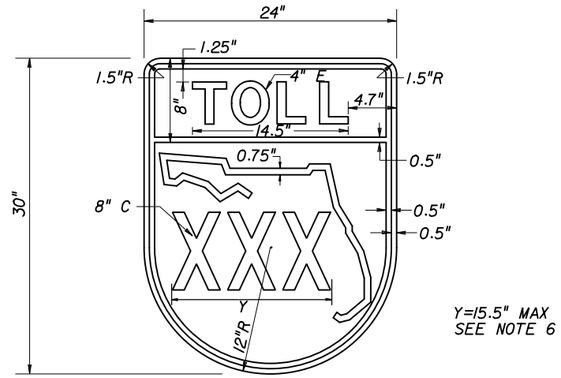

FOR USE ON:
1. MINOR CROSSROAD (2 LANE) ROUTE MARKERS.

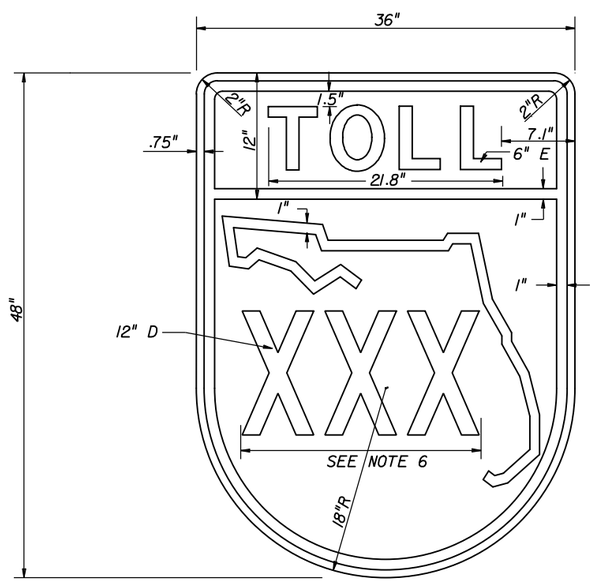

FOR USE ON:
1. MAINLINE LARGE MULTI-POST GUIDE SIGNS.
2. ALL MAJOR CROSSROAD GUIDE SIGNING (OVERHEAD AND MULTI-POST).
3. ALL MAJOR CROSSROAD ROUTE MARKERS.

NOTES TO CONSULTANT:

1. DELETE ALL INFORMATION NOT SPECIFIC TO PROJECT.
2. DELETE "FOR USE ON" NOTES AND BOX UNDER TOLL SHIELDS.
3. DELETE BOXES WITH NOTES PRIOR TO INCLUDING SHEET IN PLANS.

NOTES:

1. COLORS INDICATED ON 48"X60" SHIELD ARE APPLICABLE TO ALL SIZES.
2. SHIELD TO BE FABRICATED WITH 3M COMPANY DIAMOND GRADE CUBED (DG3) REFLECTIVE SHEETING OR AUTHORITY APPROVAL EQUAL.
3. SHOP DRAWINGS ARE REQUIRED.
4. COLORS:
   BLACK
   WHITE
   GREEN
   ORANGE, 3M COMPANY EC FILM SERIES 1174 OR AUTHORITY APPROVED EQUAL.
   IF A COLOR AND/OR SHEETING OTHER THAN THOSE NOTED SPECIFICALLY AS 3M COMPANY PRODUCTS ARE TO BE USED, CONTRACTOR SHALL PROVIDE A 4" x 4" SAMPLE IN ALL COLORS. NO FABRICATION SHALL COMMENCE UNTIL THE SAMPLE HAS BEEN REVIEWED AND WRITTEN ACCEPTANCE RECEIVED FROM THE AUTHORITY. SEE GENERAL NOTES FOR ADDITIONAL REQUIREMENTS.
5. FABRICATOR SHALL APPLY AS THE TOP LAYER, 3M COMPANY EC FILM 1170 CLEAR ON THE AUTHORITY DESIGNATED ORANGE. INSTALLATION SHALL BE PART OF A 3M MATCHED COMPONENT SYSTEM AND MEET ALL 3M SIGN FABRICATION REQUIREMENTS. CONTACT 3M AT 1-800-553-1380.
6. FABRICATOR SHALL USE STANDARD HORIZONTAL SPACING FOR NUMERALS WITHIN A ROUTE SHIELD WHEN POSSIBLE. FABRICATOR SHALL OPTICALLY ADJUST NUMERAL SPACING AS NEEDED TO PREVENT OVERLAP ONTO THE STATE OUTLINE OR SHIELD BORDER.

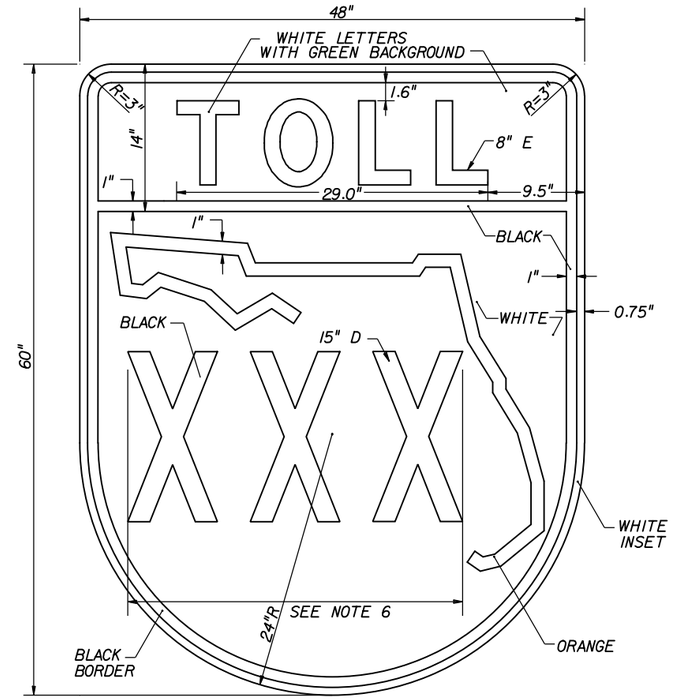

FOR USE ON:
1. MAINLINE OVERHEAD GUIDE SIGNS.
2. MAINLINE ROUTE CONFIRMATION MARKERS.

REVISIONS					
DATE	BY	DESCRIPTION	DATE	BY	DESCRIPTION

CENTRAL FLORIDA EXPRESSWAY AUTHORITY

TOLL ROUTE SHIELD (TM)

PROJECT	SHEET NO.
STANDARDS	15

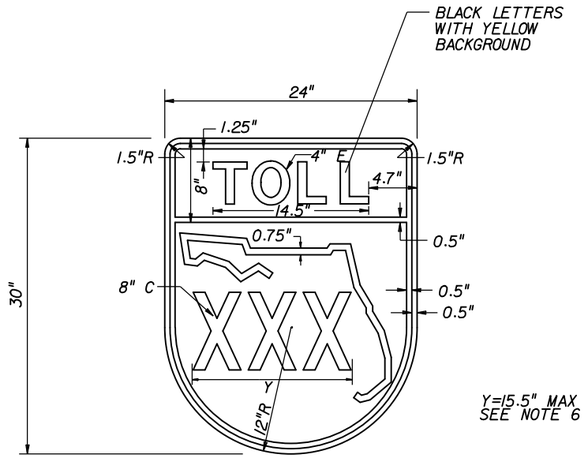

FOR USE ON:
1. MINOR CROSSROAD (2 LANE) ROUTE MARKERS.

NOTES TO CONSULTANT:

1. DELETE ALL INFORMATION NOT SPECIFIC TO PROJECT.
2. IF SIGN FALLS WITHIN STATE (FDOT) JURISDICTION THE STATE OUTLINE SHALL BE BLACK IN ACCORDANCE WITH THE FDOT DESIGN STANDARDS.
3. DELETE BOXES WITH NOTES PRIOR TO INCLUDING SHEET IN PLANS.

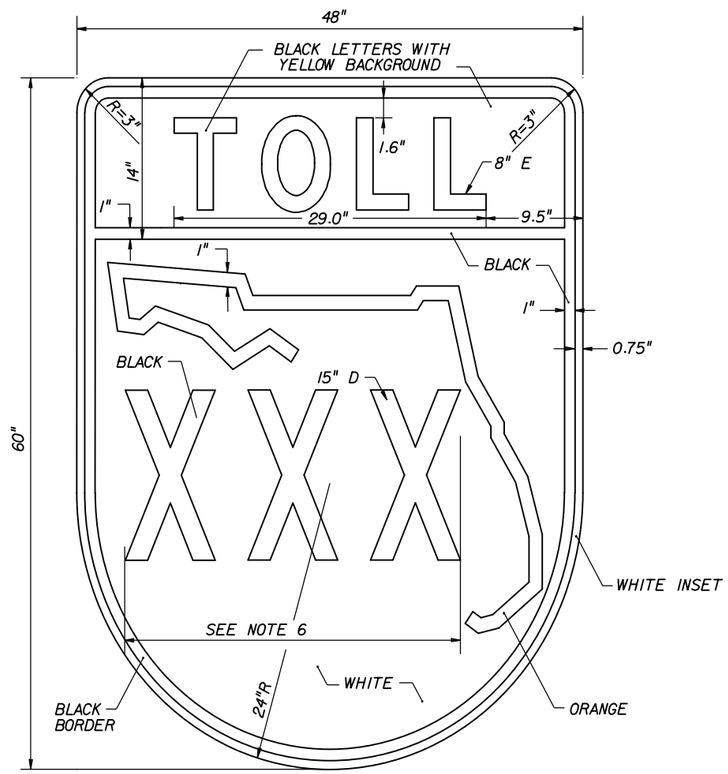

FOR USE ON:
1. MAINLINE OVERHEAD GUIDE SIGNS.
2. MAINLINE ROUTE CONFIRMATION MARKERS.

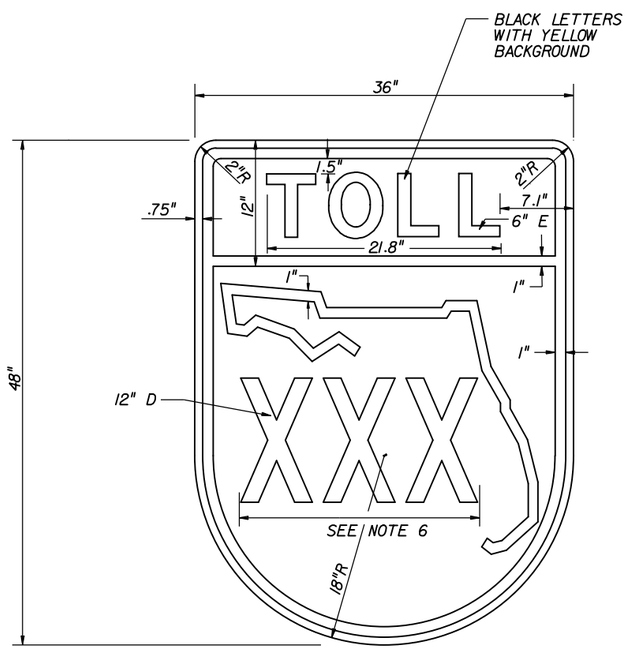

FOR USE ON:
1. MAINLINE LARGE MULTI-POST GUIDE SIGNS.
2. ALL MAJOR CROSSROAD GUIDE SIGNING (OVERHEAD AND MULTI-POST).
3. ALL MAJOR CROSSROAD ROUTE MARKERS.

NOTES:

1. COLORS INDICATED ON 48"X60" SHIELD ARE APPLICABLE TO ALL SIZES.
2. SHIELD TO BE FABRICATED WITH 3M COMPANY DIAMOND GRADE CUBED (DG3) REFLECTIVE SHEETING OR AUTHORITY APPROVAL EQUAL.
3. SHOP DRAWINGS ARE REQUIRED.
4. COLORS:
   BLACK
   WHITE
   YELLOW
   ORANGE, 3M COMPANY EC FILM SERIES 1174 OR AUTHORITY APPROVED EQUAL.
   IF A COLOR AND/OR SHEETING OTHER THAN THOSE NOTED SPECIFICALLY AS 3M COMPANY PRODUCTS ARE TO BE USED, CONTRACTOR SHALL PROVIDE A 4" x 4" SAMPLE IN ALL COLORS. NO FABRICATION SHALL COMMENCE UNTIL THE SAMPLE HAS BEEN REVIEWED AND WRITTEN ACCEPTANCE RECEIVED FROM THE AUTHORITY. SEE GENERAL NOTES FOR ADDITIONAL REQUIREMENTS.
5. FABRICATOR SHALL APPLY AS THE TOP LAYER, 3M COMPANY EC FILM 1170 CLEAR ON THE AUTHORITY DESIGNATED ORANGE. INSTALLATION SHALL BE PART OF A 3M MATCHED COMPONENT SYSTEM AND MEET ALL 3M SIGN FABRICATION REQUIREMENTS. CONTACT 3M AT 1-800-553-1380.
6. FABRICATOR SHALL USE STANDARD HORIZONTAL SPACING FOR NUMERALS WITHIN A ROUTE SHIELD WHEN POSSIBLE. FABRICATOR SHALL OPTICALLY ADJUST NUMERAL SPACING AS NEEDED TO PREVENT OVERLAP ONTO THE STATE OUTLINE OR SHIELD BORDER.

REVISIONS					
DATE	BY	DESCRIPTION	DATE	BY	DESCRIPTION

CENTRAL FLORIDA EXPRESSWAY AUTHORITY

TOLL ROUTE SHIELD (TM2)

PROJECT	SHEET NO.
STANDARDS	16

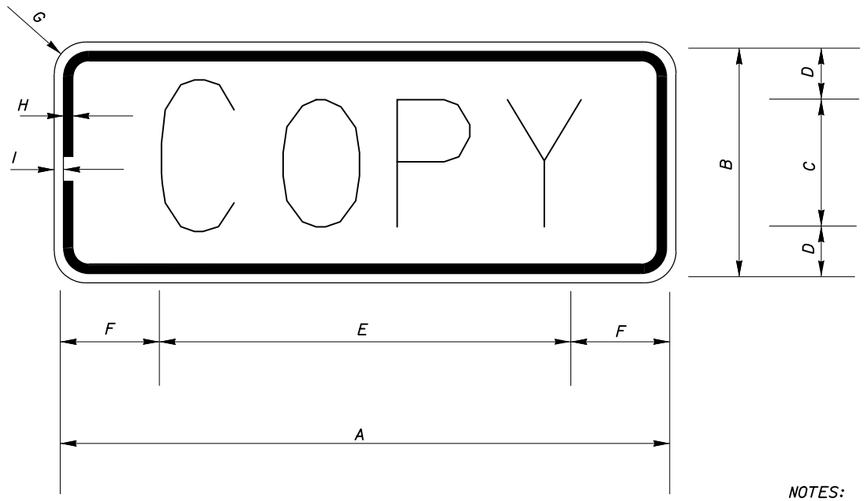

NOTES TO CONSULTANT:

1. THIS DETAIL IS NOT INCLUSIVE OF ALL POSSIBLE SPECIAL DESIGN AUXILIARY PANELS.
2. ONLY INCLUDE PANELS SPECIFIC TO PROJECT.
3. DELETE BOX WITH NOTES PRIOR TO INCLUDING SHEET IN PLANS.

	CODE	COPY	A	B	C	D	E	F	G	H	I	QTY. REQ'D
	M2-1X	JCT	24	15	9C	3	17.2	3.4	1.5	.625	.375	
	M2-1XX	JCT	36	18	10D	4	23.0	6.5	1.5	.75	.25	
*	M3-1X	NORTH	36	18	9C	4.5	30.0	3.0	1.5	.625	.375	
	M3-1XX	NORTH	48	18	10C	4	34.8	6.6	1.5	.75	.25	
	M3-2X	EAST	36	18	10C	4	25.6	5.2	1.5	.625	.375	
	M3-2XX	EAST	48	18	10D	4	30.8	8.6	1.5	.75	.25	
*	M3-3X	SOUTH	36	18	9C	4.5	30.0	3.0	1.5	.625	.375	
	M3-3XX	SOUTH	48	18	10C	4	34.8	6.6	1.5	.75	.25	
	M3-4X	WEST	36	18	10C	4	27.8	4.1	1.5	.625	.375	
	M3-4XX	WEST	48	18	10D	4	32.4	7.8	1.5	.75	.25	
	M4-5X	TO	36	18	10D	4	14.6	10.7	1.5	.625	.375	
	M4-5XX	TO	48	18	10D	4	14.6	16.7	1.5	.75	.25	

NOTES:

1. ALL DIMENSIONS ARE IN INCHES.
2. AUXILIARY PANELS WITH TOLL SHIELDS:
   BACKGROUND: DG3 WHITE
   LEGEND & BORDER: BLACK.
3. BACKGROUND, LEGEND AND BORDER COLORS SHALL MATCH ASSOCIATED INTERSTATE, STATE OR COUNTY ROUTE SHIELDS.
4. * REDUCE COPY SPACING TO SPECIFIED OVERALL LENGTH.
5. MAKE FIRST LETTER OF CARDINAL DIRECTION (M3-X, M3-XX) 10% LARGER. ALL LETTERS ARE BOTTOM JUSTIFIED.
6. SHOP DRAWINGS ARE REQUIRED.
7. ALL AUXILLIARY PANELS SHALL BE 3M COMPANY DIAMOND GRADE CUBED (DG3) REFLECTIVE SHEETING OR AUTHORITY APPROVED EQUAL. SEE GENERAL NOTES FOR ADDITIONAL REQUIREMENTS.

REVISIONS

DATE	BY	DESCRIPTION	DATE	BY	DESCRIPTION

CENTRAL FLORIDA EXPRESSWAY AUTHORITY

SPECIAL DESIGN AUXILIARY PANELS FOR ROUTE MARKERS

PROJECT: STANDARDS

SHEET NO. 17

NOTES TO CONSULTANT:

1. APPROPRIATE SPEED LIMIT(S) SHALL BE SHOWN. USE TABULAR FORMAT (ON THIS SHEET) IF MULTIPLE SPEED LIMITS NEEDED IN PROJECT.

2. DELETE BOXES WITH NOTES PRIOR TO INCLUDING SHEET IN PLANS.

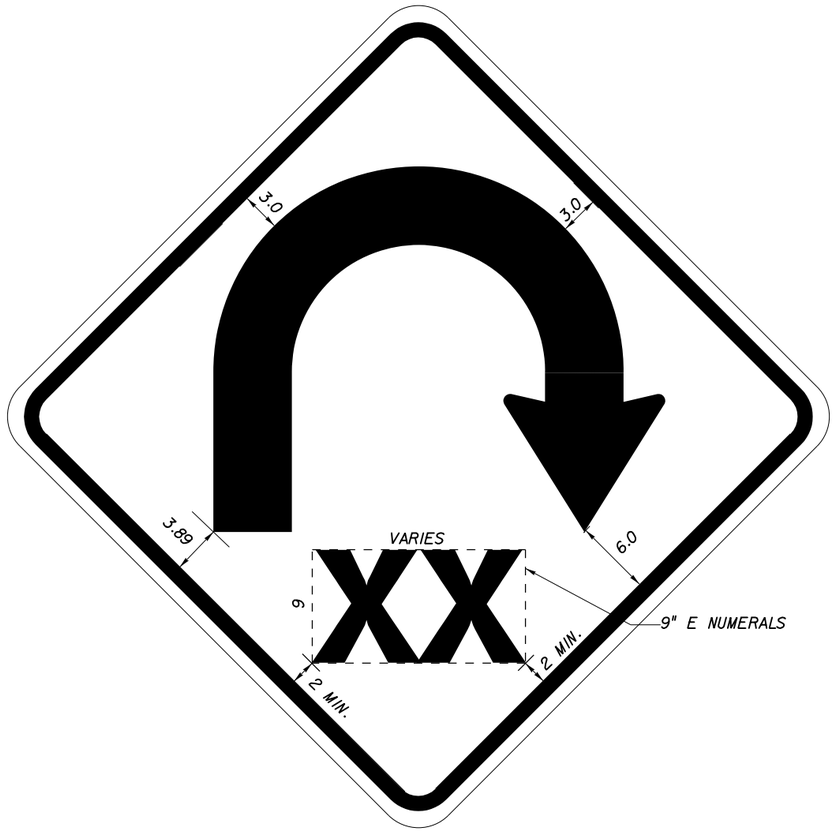

SIGN W1-11A
48" x 48"
QTY REQ'D____

FOR USE AT PARTIAL CLOVERLEAF RAMPS

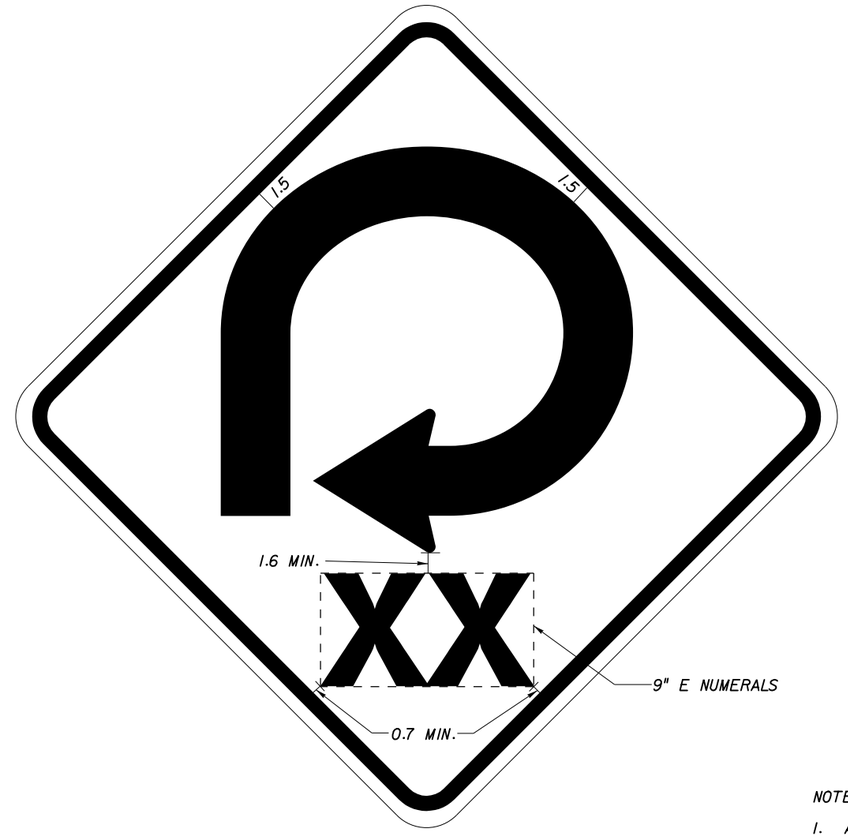

SIGN W1-15A
48" x 48"
QTY REQ'D____

FOR USE AT LOOP RAMPS

NOTES:

1. ALL DIMENSIONS ARE IN INCHES.
2. SIGNS SHALL BE FABRICATED USING 3M FLUORESCENT YELLOW DIAMOND GRADE CUBED (DG3) REFLECTIVE SHEETING OR AUTHORITY APPROVED EQUAL. IF SHEETING OTHER THAN 3M FLUORESCENT YELLOW DG3 IS TO BE USED, A 4"x4" SAMPLE SHALL BE SUBMITTED TO THE AUTHORITY FOR APPROVAL PRIOR TO FABRICATION. SEE GENERAL NOTES FOR ADDITIONAL REQUIREMENTS.
3. SHOP DRAWINGS ARE REQUIRED.
4. BACKGROUND: FLUORESCENT YELLOW
5. COPY AND BORDER: BLACK
6. BORDER INSET: 0.75 INCHES.
7. BORDER WIDTH: 1.25 INCHES.
8. CORNER RADII: 3.00 INCHES.
9. USE ARROW DESIGNS FROM STANDARD PANELS W1-11 AND W1-15 AS FOUND IN THE FHWA STANDARD HIGHWAY SIGNS.
10. OPTICALLY LOCATE NUMERALS.

REVISIONS

DATE	BY	DESCRIPTION	DATE	BY	DESCRIPTION

CENTRAL FLORIDA EXPRESSWAY AUTHORITY

SPECIAL CURVE WARNING SIGNS
SIGNS W1-11A, W1-15A

PROJECT	SHEET NO.
STANDARDS	18

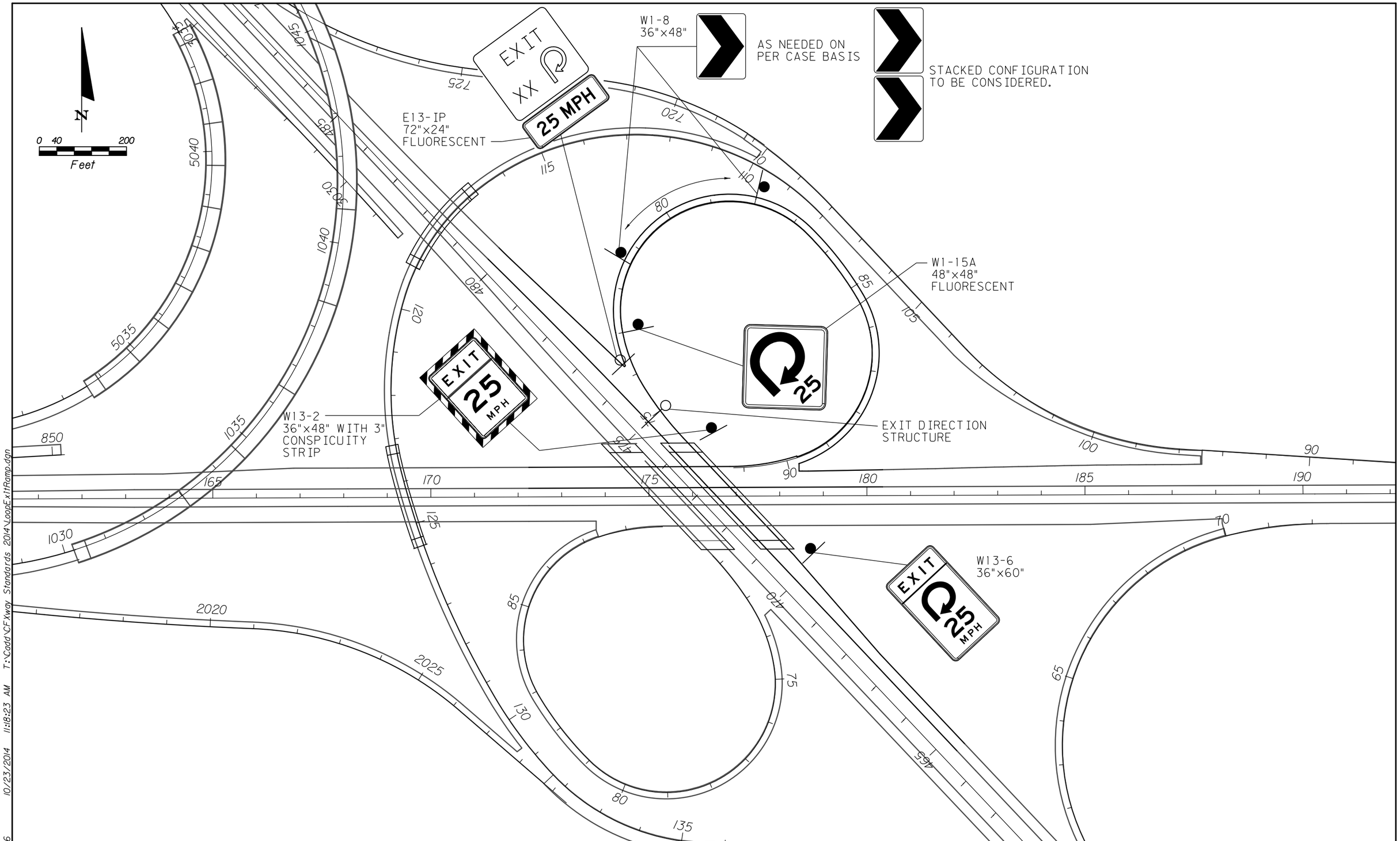

USER: STOD3416 10/23/2014 11:18:23 AM T:\Cadd\CFXway Standards 2014\LoopExitRamp.dgn

REVISIONS					
DATE	BY	DESCRIPTION	DATE	BY	DESCRIPTION

CENTRAL
FLORIDA
EXPRESSWAY
AUTHORITY

LOOP EXIT RAMP TYPICAL SIGNING

PROJECT	SHEET NO.
STANDARDS	19

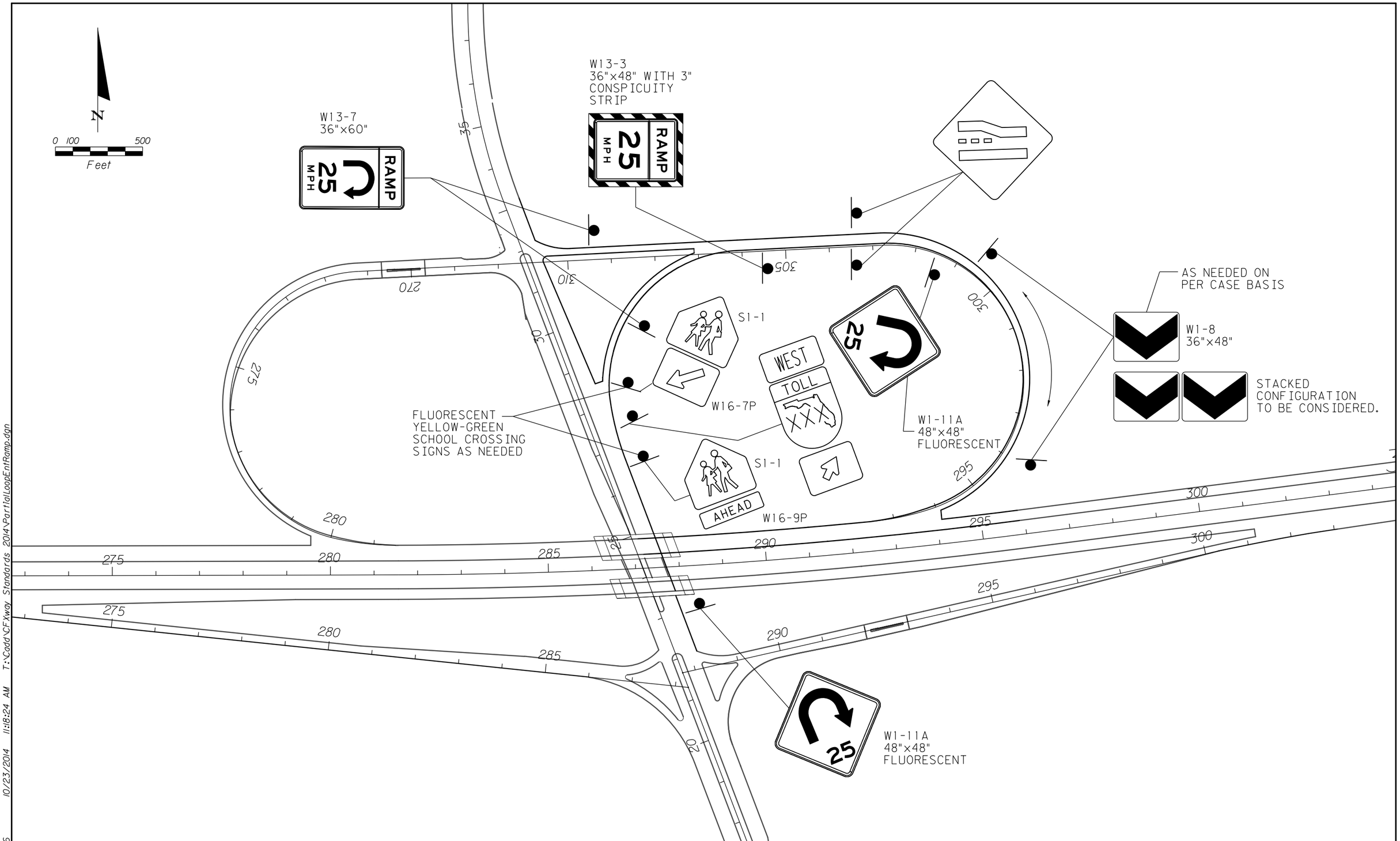

USER: ST0D3416 10/23/2014 11:18:24 AM T:\Cadd\CFXway Standards 2014\PartialLoopEntRamp.dgn

REVISIONS					
DATE	BY	DESCRIPTION	DATE	BY	DESCRIPTION

CENTRAL FLORIDA EXPRESSWAY AUTHORITY

PARTIAL LOOP ENTRANCE RAMP TYPICAL SIGNING

PROJECT	SHEET NO.
STANDARDS	20

Sign	W13-7 (MOD)
Quantity	
Width	3'-0"
Height	5'-0"
Border Width	
Border Radii	.875"
Border Inset	.625"
Background Color	Yellow
Legend/Border Color	Black
Sheeting	DG3
Arrow Size (Angle)	
Station/Structure	

* INCREASE SPACING 100%

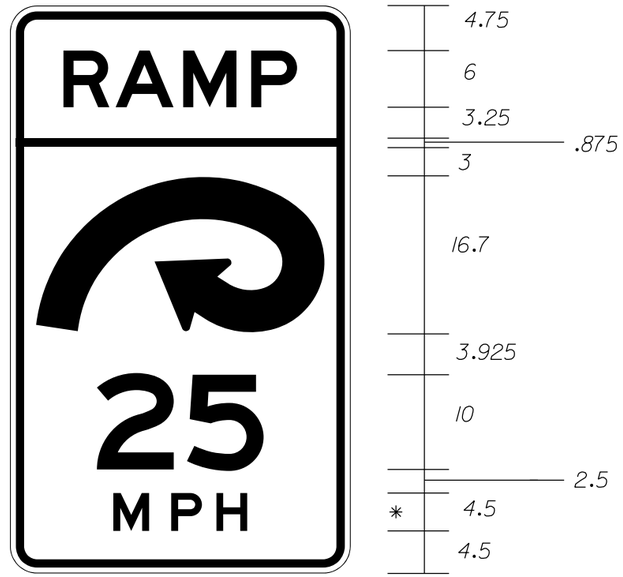

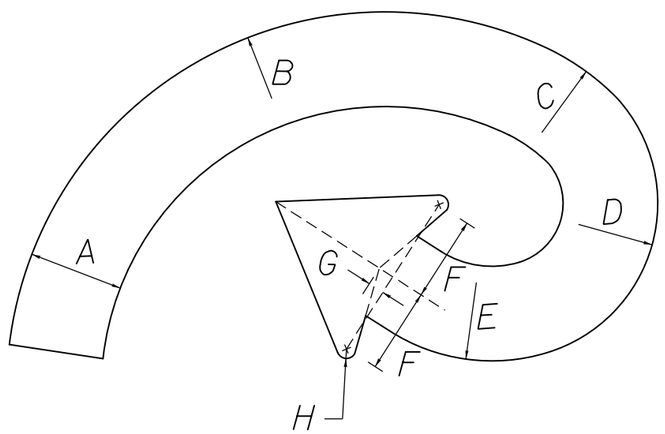

SPECIAL ARROW DETAIL
FOR SIGNS XX, XX

NOTES:

1. ALL DIMENSIONS ARE IN INCHES.
2. BACKGROUND: DG3 YELLOW
   LEGEND AND BORDER: DG3 BLACK
3. SHOP DRAWINGS ARE REQUIRED.

SIGN NO.	A	B	C	D	E	F	G	H
XX	5	20	13	8.25	10	4.5	.84	.5
XX	4.45	17.78	11.52	7.33	8.89	4	.74	.444

Sign	W13-3
Quantity	
Width	3'-6"
Height	4'-6"
Border Width	
Border Radii	
Border Inset	
Background Color	Yellow
Legend/Border Color	Black
Sheeting	DG3
Arrow Size (Angle)	
Station/Structure	

1. USE STANDARD 36"x48" W13-3 SIGN FACE WITH A 3" WIDE FLUORESCENT CONSPICUITY STRIP ON EACH SIDE.
2. CONSPICUITY STRIP SHALL NOT HAVE A BORDER OR CORNER RADII.
3. W13-3 AND CONSPICUITY STRIP SHALL BE APPLIED TO A SINGLE SHEET OF ALUMINUM. THE CONSPICUITY STRIP SHALL NOT BE ATTACHED TO A STANDARD W13-3 OR TO A PRE-CUT 36x48" SIGN BLANK.

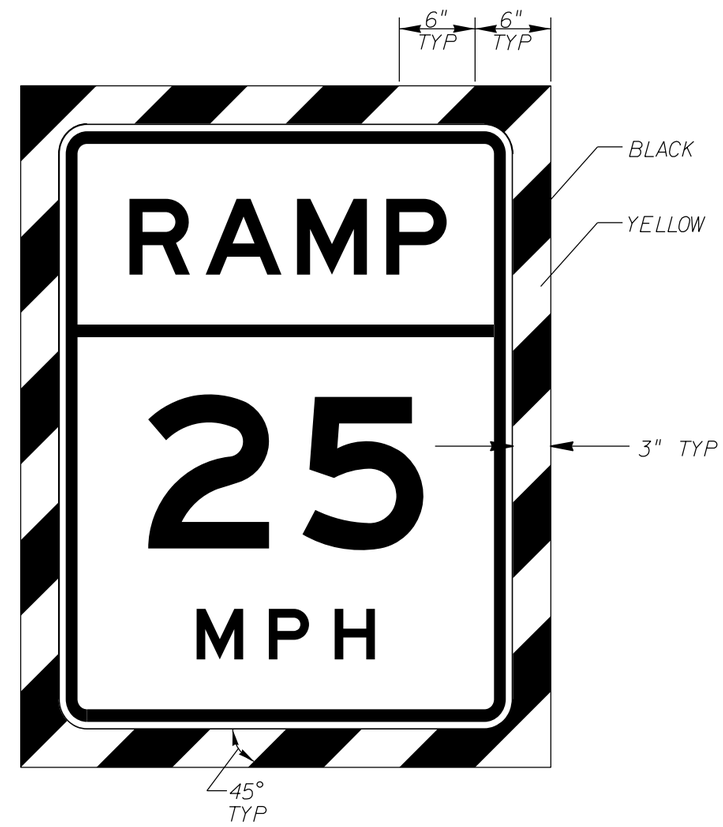

REVISIONS					
DATE	BY	DESCRIPTION	DATE	BY	DESCRIPTION

CENTRAL FLORIDA EXPRESSWAY AUTHORITY

LOOP RAMP
SPECIAL DETAIL EXAMPLES

PROJECT	SHEET NO.
STANDARDS	21

NOTES TO CONSULTANT:

1. ASSUMED DATUM MAY ONLY BE USED FOR PROJECTS LIMITED TO SIGNING.
2. ACTUAL ELEVATIONS ARE REQUIRED FOR NEW ROADWAY CONSTRUCTION, INCLUDING SIGN STRUCTURES OUTSIDE THE LIMITS OF CONSTRUCTION. APPLIES TO PROPOSED SIGN STRUCTURES AND EXISTING TO BE MODIFIED. DOES NOT APPLY WHEN SIGNS ON EXISTING STRUCTURES ARE TO BE OVERLAID.
3. MEASURE AND SHOW CLEAR ZONE FROM BOTH FRONT AND BACK OF SUPPORT WHEN UPRIGHT IS LOCATED BETWEEN 2 ROADWAYS AND WITHIN AUTHORITY JURISDICTION. SEE OC-2.
4. A GRAPHIC OF EACH PANEL SHALL BE SHOWN AND LABELED.
5. THIS SHEET PROVIDED AS AN EXAMPLE ONLY AND IS NOT FOR USE IN ACTUAL PLANS.
6. IF EXIT NUMBER PLAQUES HAVE SEPARATE UNIQUE PANEL NUMBERS, ADD TO SHEET.
7. HORIZONTAL CLEARANCE MEASURED TO NEAR EDGE OF FOUNDATION WHEN EXTENSION ABOVE GROUND EXCEEDS 3".

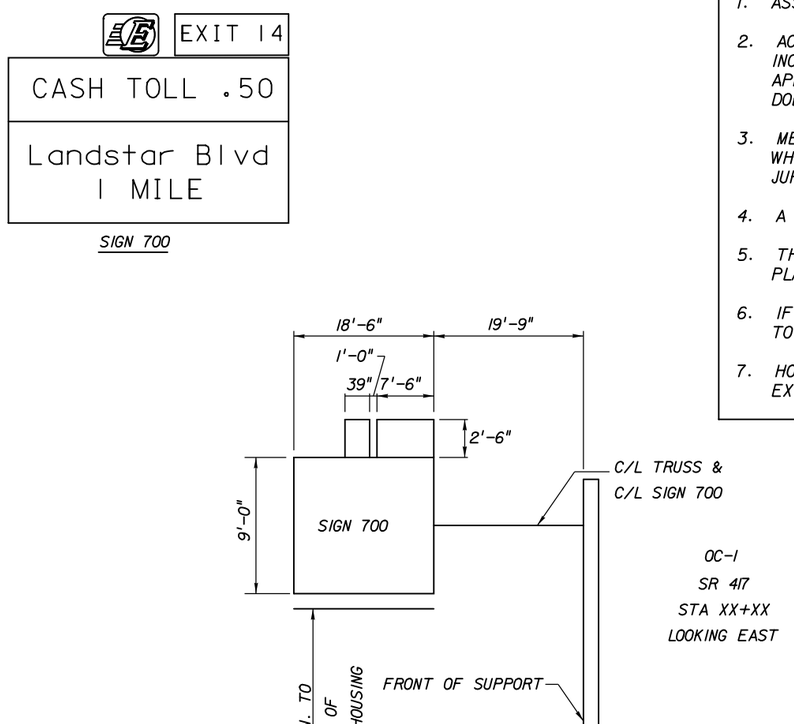

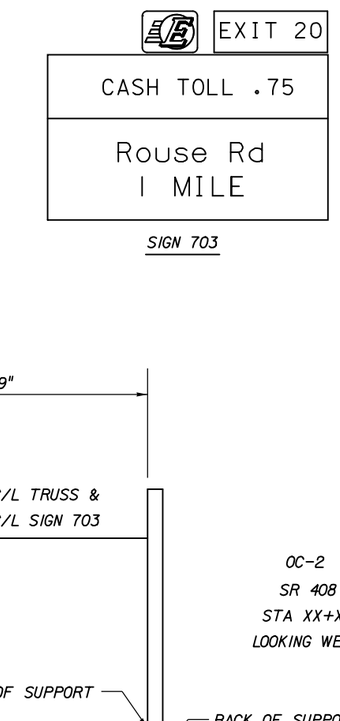

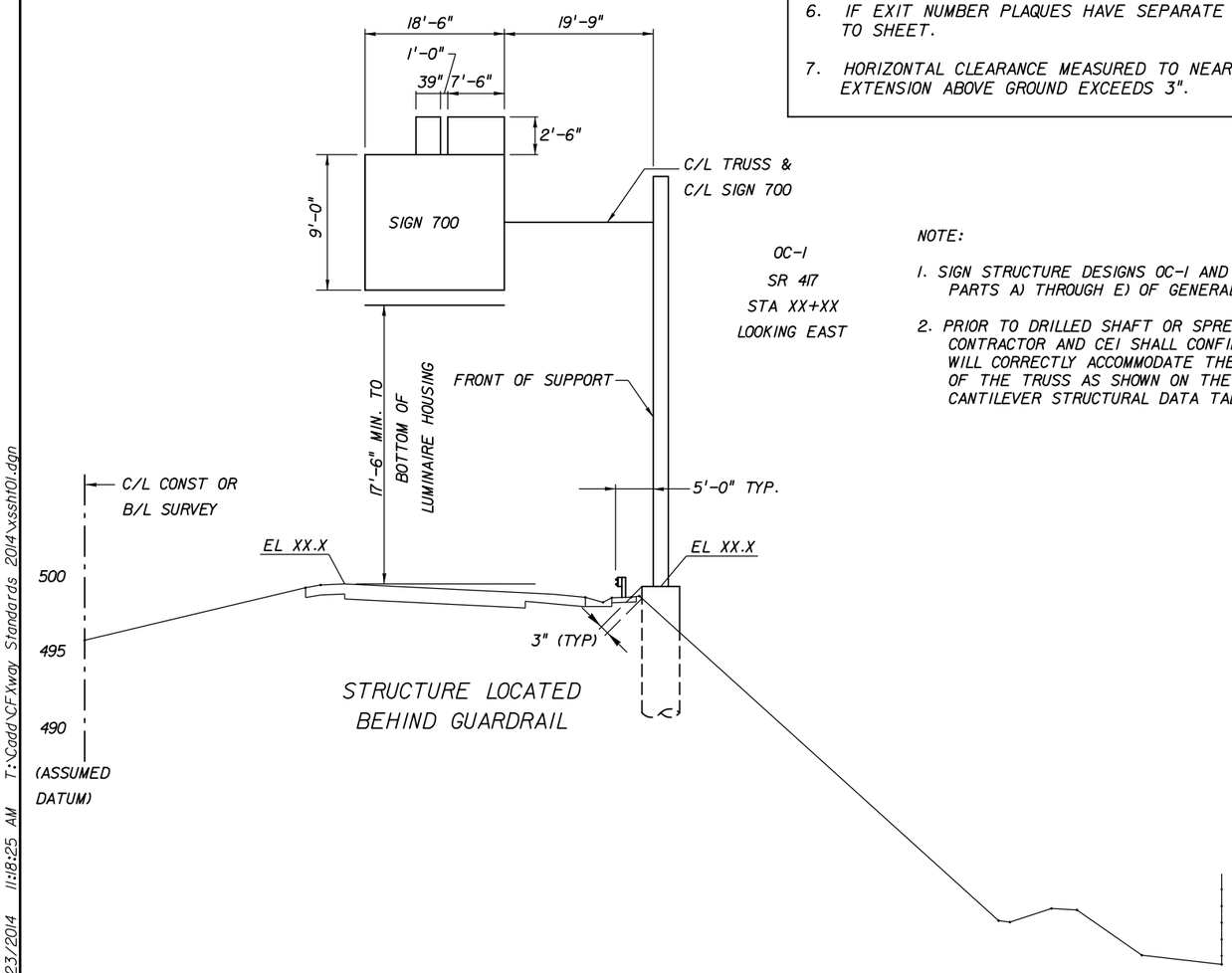

NOTE:

1. SIGN STRUCTURE DESIGNS OC-1 AND OC-2 WERE BASED ON PARTS A) THROUGH E) OF GENERAL NOTE 18.
2. PRIOR TO DRILLED SHAFT OR SPREAD FOOTING INSTALLATIONS, BOTH THE CONTRACTOR AND CEI SHALL CONFIRM THAT ALL LOCATIONS AND ELEVATIONS WILL CORRECTLY ACCOMMODATE THE CLEARANCES AND THE TOTAL LENGTH OF THE TRUSS AS SHOWN ON THE STRUCTURAL DESIGN SHEET ENTITLED CANTILEVER STRUCTURAL DATA TABLE AND CORRESPONDING SHOP DRAWINGS.

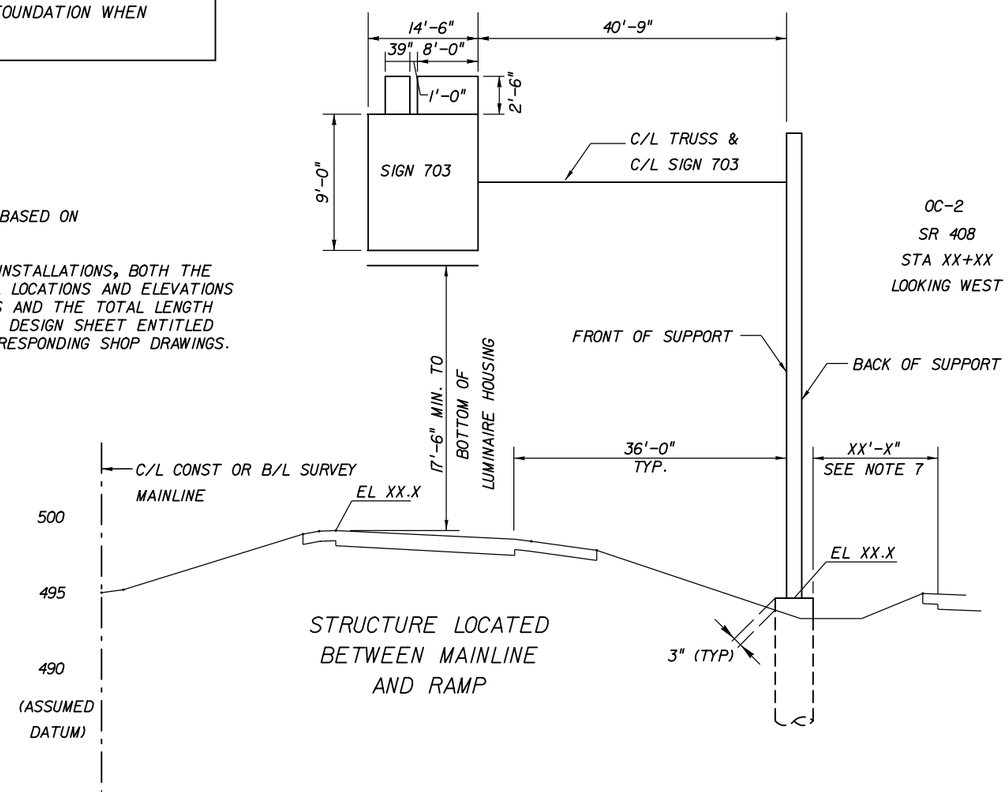

SCALE: HORIZ: 1"=20'
VERT: 1"=10'

USER: STOD3416 10/23/2014 11:18:25 AM T:\Cadd\CFXway Standards 2014\xsshtOl.dgn

REVISIONS					
DATE	BY	DESCRIPTION	DATE	BY	DESCRIPTION

CENTRAL FLORIDA EXPRESSWAY AUTHORITY

SIGN CROSS SECTIONS
OC-1, OC-2

PROJECT	SHEET NO.
STANDARDS	22

NOTES:

1. 17'-6" MIN. VERTICAL CLEARANCE SET FROM ELEVATION OF FUTURE 12' WIDENING.
2. TRUSS DESIGNED TO ACCOMMODATE FUTURE PANELS 20'-0" X 15'-0" AND 8'-0" X 2'6".
3. PRIOR TO DRILLED SHAFT OR SPREAD FOOTING INSTALLATIONS, BOTH THE CONTRACTOR AND CEI SHALL CONFIRM THAT ALL LOCATIONS AND ELEVATIONS WILL CORRECTLY ACCOMMODATE THE CLEARANCES AND THE TOTAL LENGTH OF THE TRUSS AS SHOWN ON THE STRUCTURAL DESIGN SHEET ENTITLED SPAN TRUSS STRUCTURAL DATA TABLE AND CORRESPONDING SHOP DRAWINGS.
4. SIGN STRUCTURE DESIGN WAS BASED ON PARTS A) THROUGH E) OF GENERAL NOTE 18.

SIGN 705

SIGN 706

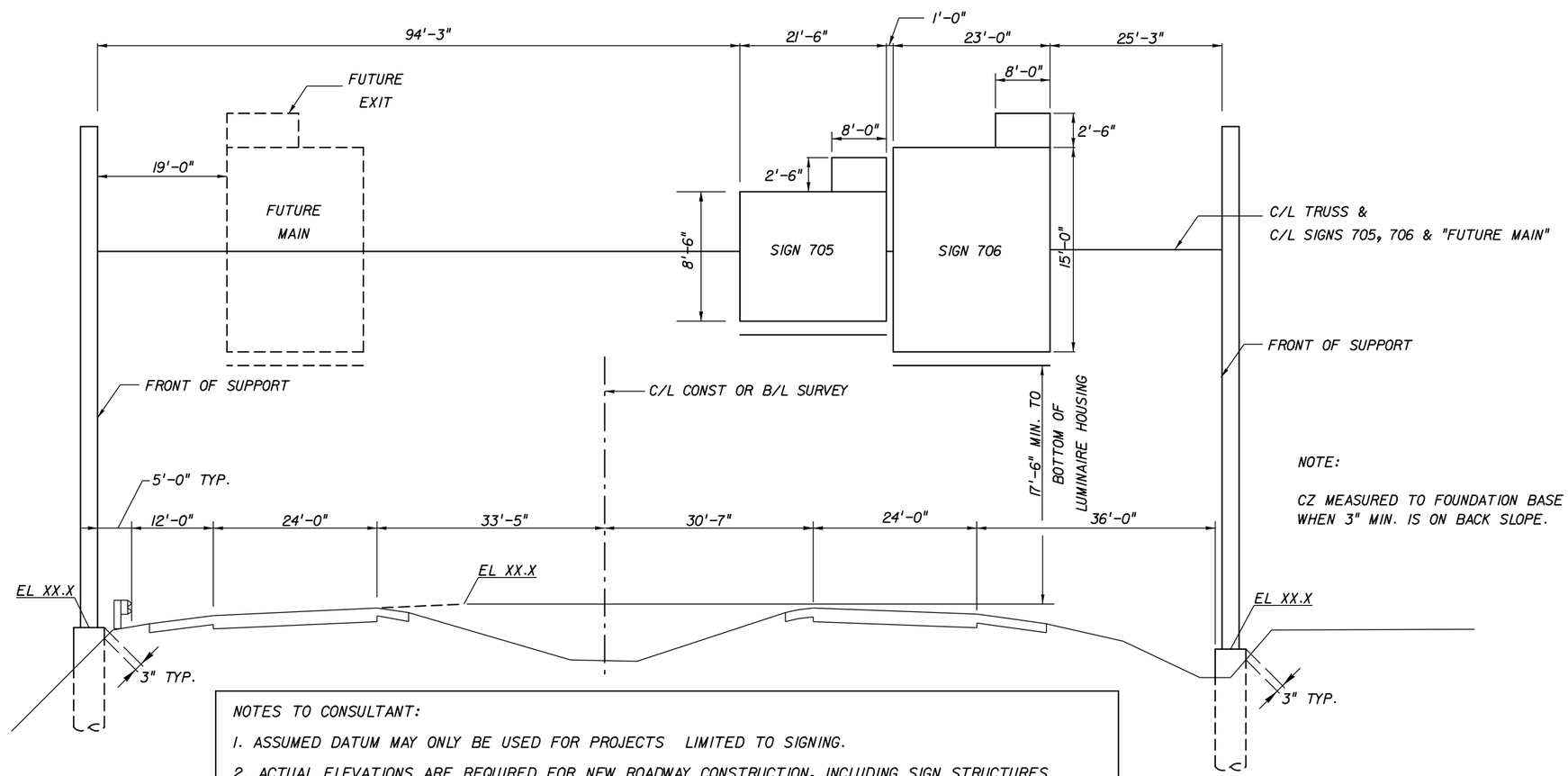

OT-1

SR 408
STA XX+XX
LOOKING EAST

NOTE:

CZ MEASURED TO FOUNDATION BASE WHEN 3" MIN. IS ON BACK SLOPE.

500

495

490

(ASSUMED DATUM)

NOTES TO CONSULTANT:

1. ASSUMED DATUM MAY ONLY BE USED FOR PROJECTS LIMITED TO SIGNING.
2. ACTUAL ELEVATIONS ARE REQUIRED FOR NEW ROADWAY CONSTRUCTION, INCLUDING SIGN STRUCTURES OUTSIDE THE LIMITS OF CONSTRUCTION. APPLIES TO PROPOSED SIGN STRUCTURES AND EXISTING TO BE MODIFIED. DOES NOT APPLY WHEN SIGNS ON EXISTING STRUCTURES ARE TO BE OVERLAID.
3. A GRAPHIC OF EACH PANEL SHALL BE SHOWN AND LABELED.
4. THIS SHEET PROVIDED AS AN EXAMPLE ONLY AND IS NOT FOR USE IN ACTUAL PLANS.
5. IF EXIT NUMBER PLAQUES HAVE SEPARATE UNIQUE PANEL NUMBERS, ADD TO SHEET.

SCALE: HORIZ: 1"=20'
VERT: 1"=10'

REVISIONS

DATE	BY	DESCRIPTION	DATE	BY	DESCRIPTION

CENTRAL FLORIDA EXPRESSWAY AUTHORITY

SIGN CROSS SECTIONS
OT-1

PROJECT	SHEET NO.
STANDARDS	23

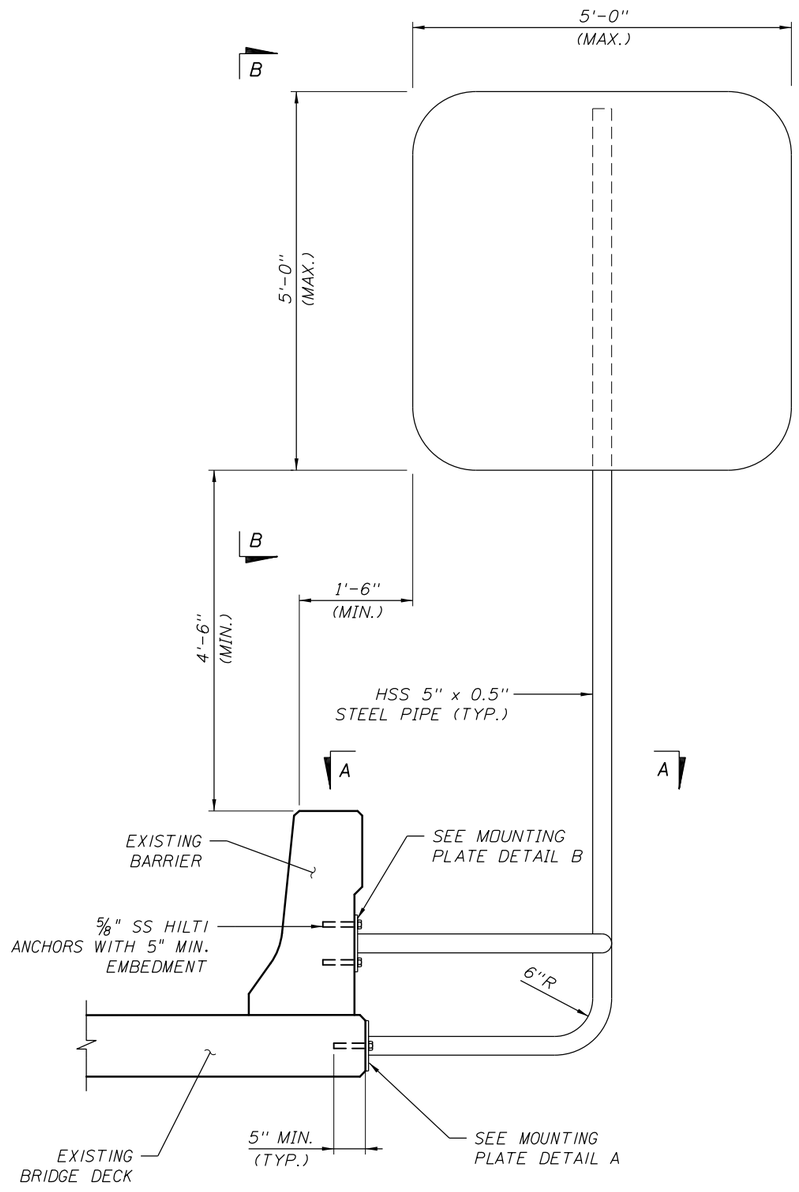

SIGN DETAIL
(STA. XX+XX)

NOTES TO CONSULTANT:

1. THE CONSULTANT SHALL PROVIDE VERIFICATION THAT EXISTING BRIDGES AND SIGN STRUCTURES CAN SAFELY ACCOMMODATE PROPOSED SIGNS. INCLUDE DOCUMENTATION WITH THE 90% PLANS SUBMITTAL.
2. THE SIZES ARE PRELIMINARY. CONSULTANT SHALL VERIFY ALL DATA AND SIGN AND SEAL SHEET.
3. THE SAME CONFIGURATION SHALL BE USED WHENEVER POSSIBLE IF PROJECT NECESSITATES MOUNTING SIGNS TO THE BACK OF WALLS (SOUND, MSE, ETC.). THE CONSULTANT SHALL PROVIDE DESIGN(S) IN A COMPARABLE LEVEL OF DETAIL AS SHOWN IN THESE BRIDGE MOUNTED CONCEPTUAL SHEETS.
4. CONSULTANT SHALL REVISE NOTE 1 TO INCLUDE APPLICABLE FDOT STRUCTURES MANUAL EDITION.
5. CONSULTANT TO REMOVE THIS BOX AND NOTES IN IT PRIOR TO PRINTING FOR PARTICULAR PROJECT.

NOTES:

1. DESIGN ACCORDING TO FDOT STRUCTURES MANUAL XXXX.
2. HOLLOW STRUCTURAL STEEL SECTIONS SHALL CONFORM TO ASTM A500, GRADE B (FY= 42 KSI).
3. STEEL PLATES SHALL CONFORM TO ASTM A36.
4. WELDING SHALL CONFORM TO LATEST EDITION OF AWS D1.1 STRUCTURAL WELDING CODE. ALL HSS WELDS TO BE ALL AROUND SEAL WELDS.
5. ALL STRUCTURAL STEEL PLATES, SHAPES, AND ACCESSORIES SHALL BE GALVANIZED ACCORDING TO FDOT SPECIFICATION SECTION 962-7.
6. THE CONTRACTOR SHALL FIELD VERIFY EXISTING REINFORCEMENT LOCATIONS TO MISS THE REBARS WHILE DRILLING FOR THE 5/8" DIAMETER ANCHORS.
7. SHOP DRAWINGS FOR THIS STRUCTURE SHALL BE SUBMITTED TO THE ENGINEER OF RECORD FOR REVIEW AND APPROVAL PRIOR TO FABRICATION.
8. PAYMENT FOR THIS ITEM SHALL BE MADE UNDER ITEM NO. 700-1-74, SIGN SINGLE POST (SPECIAL BRIDGE/WALL MOUNT). SEE SIGNING PLANS FOR QUANTITY REQUIRED.

REVISIONS					
DATE	BY	DESCRIPTION	DATE	BY	DESCRIPTION

CENTRAL FLORIDA EXPRESSWAY AUTHORITY

BRIDGE MOUNTED SIGN ASSEMBLY DETAIL (1 OF 2)

PROJECT	SHEET NO.
STANDARDS	24

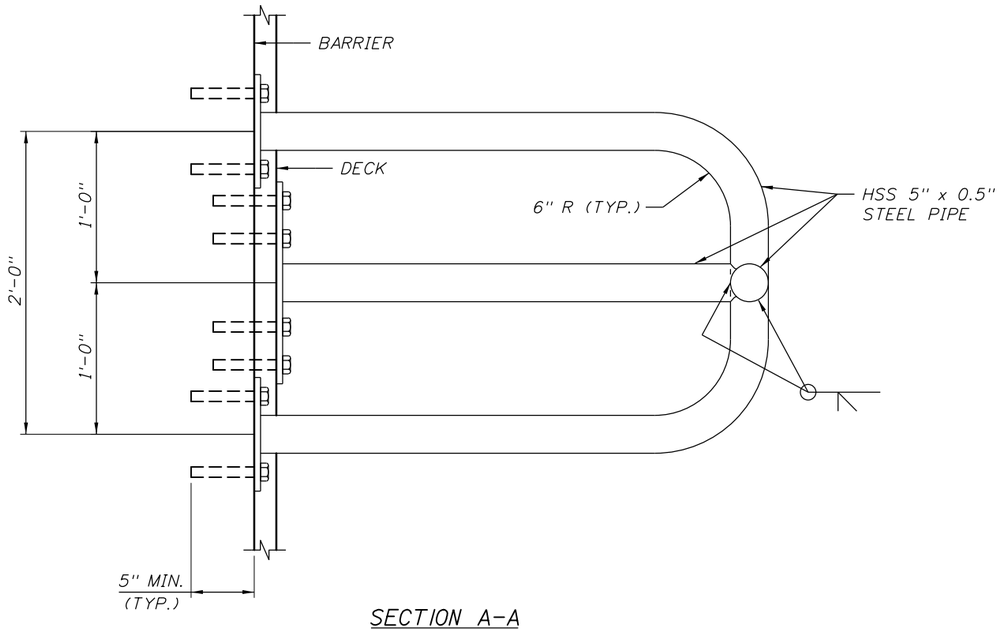

SECTION A-A

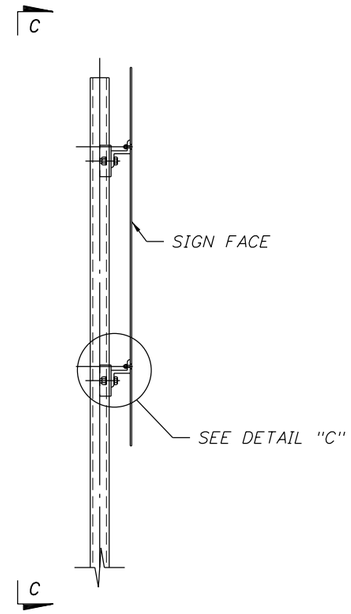

VIEW B-B

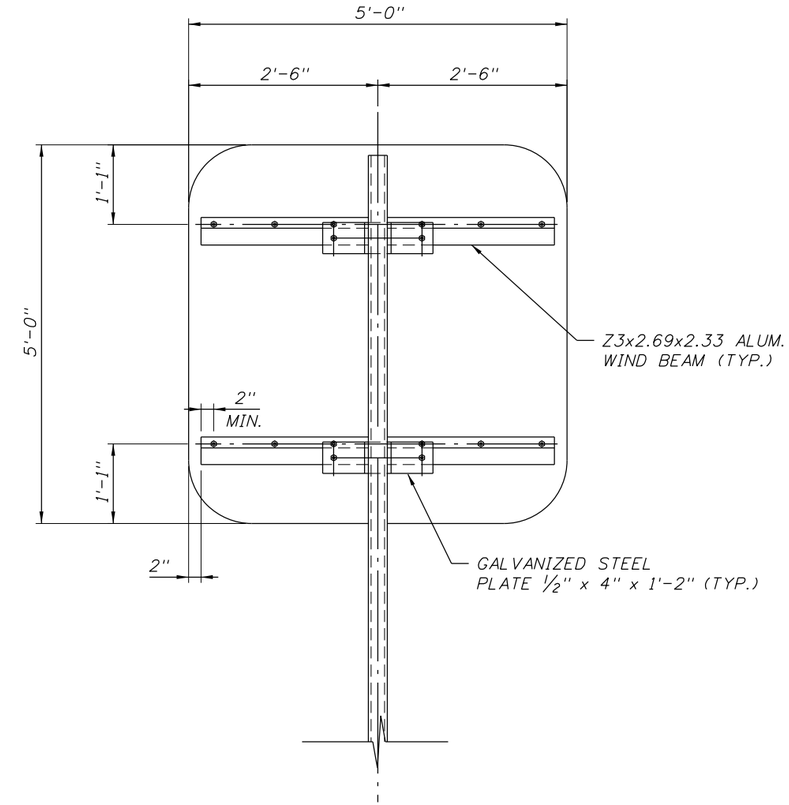

VIEW C-C

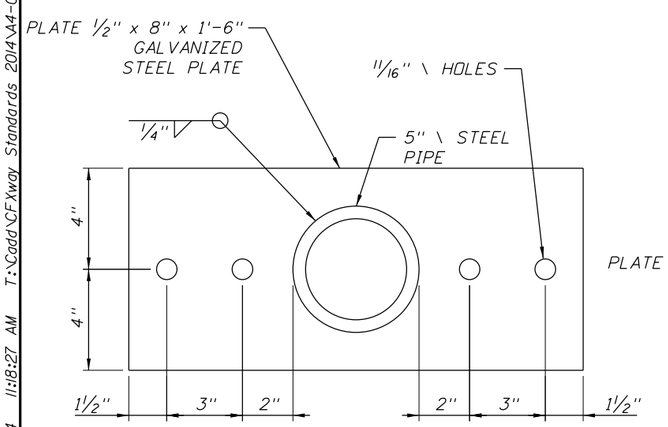

MOUNTING PLATE DETAIL A

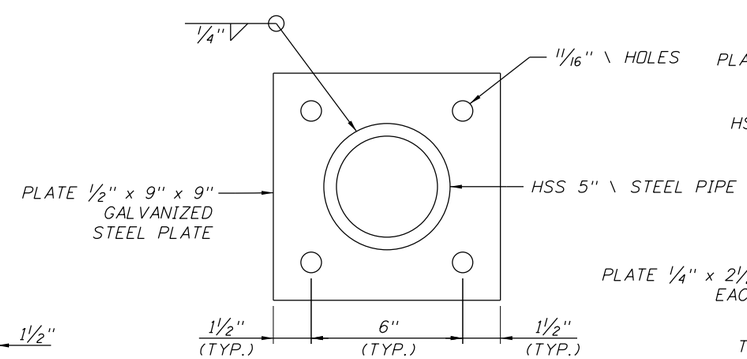

MOUNTING PLATE DETAIL B

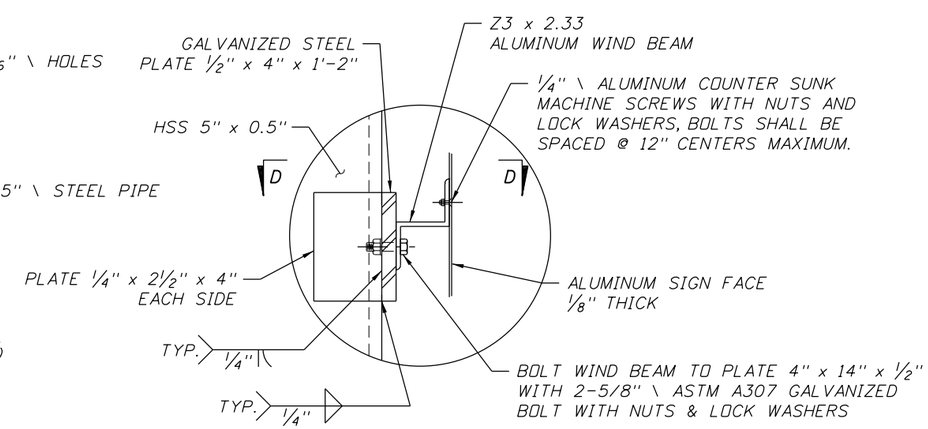

DETAIL "C"

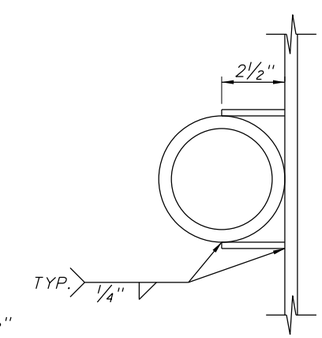

SECTION D-D

USER: STOD3416 10/23/2014 11:18:27 AM T:\Cadd\CFXway Standards 2014\A4-04.dgn

REVISIONS					
DATE	BY	DESCRIPTION	DATE	BY	DESCRIPTION

CENTRAL FLORIDA EXPRESSWAY AUTHORITY

BRIDGE MOUNTED SIGN ASSEMBLY DETAIL (2 OF 2)

PROJECT	SHEET NO.
STANDARDS	25

NOTES TO CONSULTANT:

1. IF BRIDGE MOUNTED LOGO (L-2) IS THE ONLY AUTHORITY LOGO TO BE INSTALLED WITHIN PROJECT LIMITS, THE DETAIL OF LOGO L-2 AND APPLICABLE NOTES SHALL BE SHOWN ON THIS SHEET.

2. DELETE BOX WITH NOTES PRIOR TO INCLUDING SHEET IN PLANS.

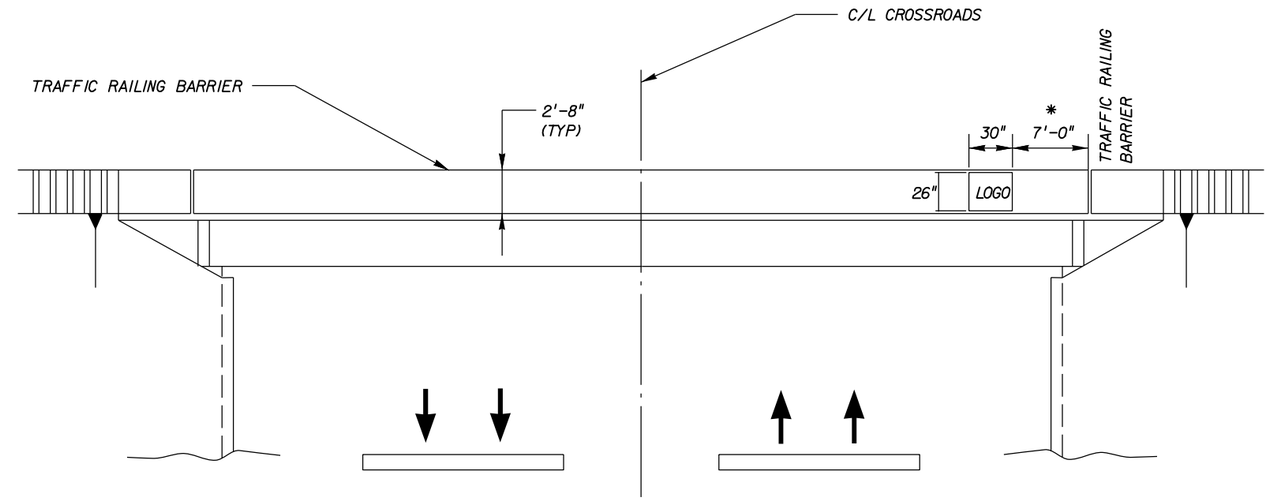

* ADJUST DIMENSIONS AS NEEDED TO ENSURE LOGO SIGN IS NOT PLACED OVER TRAFFIC LANES AND/OR SHOULDERS.

GENERAL NOTES

1. LOGO (L-2) SHALL BE USED AT ALL BRIDGE MOUNTING LOCATIONS.

2. PANEL SHALL BE MOUNTED FLUSH WITH BARRIER. CONTRACTOR SHALL BE RESPONSIBLE FOR MOUNTING AND SHALL PROVIDE SHOP DRAWINGS FOR APPROVAL PRIOR TO PANEL INSTALLATIONS.

3. SIGN PANEL TO BE EVENLY SPACED VERTICALLY WITHIN 2'-8" (TYP.) TRAFFIC RAILING BARRIER.

4. CONTRACTOR SHALL UTILIZE TRAFFIC CONTROL REQUIREMENTS OF INDEX 611 WHILE INSTALLING SIGNS. NO TRAVEL LANES ARE PERMITTED TO BE CLOSED. ANY APPROVAL NECESSARY TO WORK IN RIGHT-OF-WAY OTHER THAN OWNED BY THE AUTHORITY SHALL BE THE RESPONSIBILITY OF THE CONTRACTOR.

5. LOGO INSTALLATION TO BE PAID PER EACH UNDER ITEM NO. 700-3-201C.

CROSS ROAD	FACING DIRECTION
TOTAL ASSEMBLIES	

AUTHORITY LOGO (L-2)
BRIDGE MOUNTING LOCATIONS
(CROSSROADS)

REVISIONS					
DATE	BY	DESCRIPTION	DATE	BY	DESCRIPTION

CENTRAL FLORIDA EXPRESSWAY AUTHORITY

BRIDGE MOUNTED LOGO INSTALLATION

PROJECT	SHEET NO.
STANDARDS	26

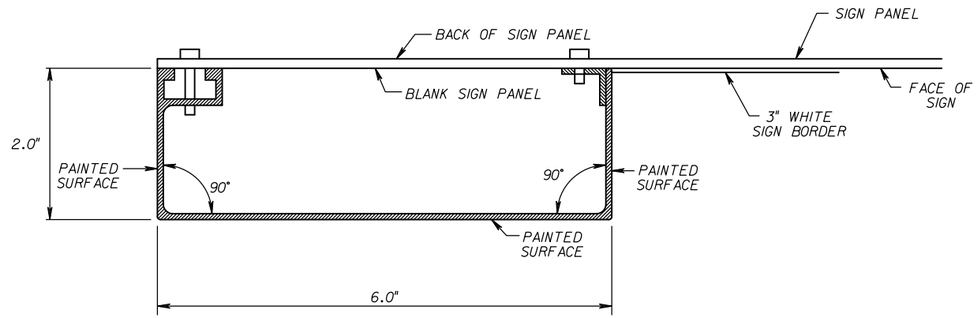

SIGN PANEL FRAME EXTRUSION DETAIL (TYP.)
SECTION B-B

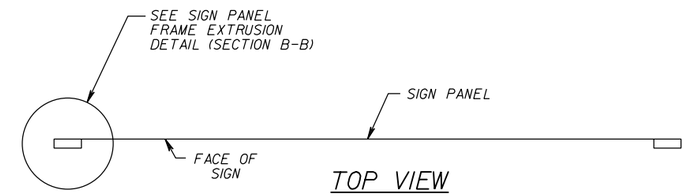

TOP VIEW
SECTION A-A

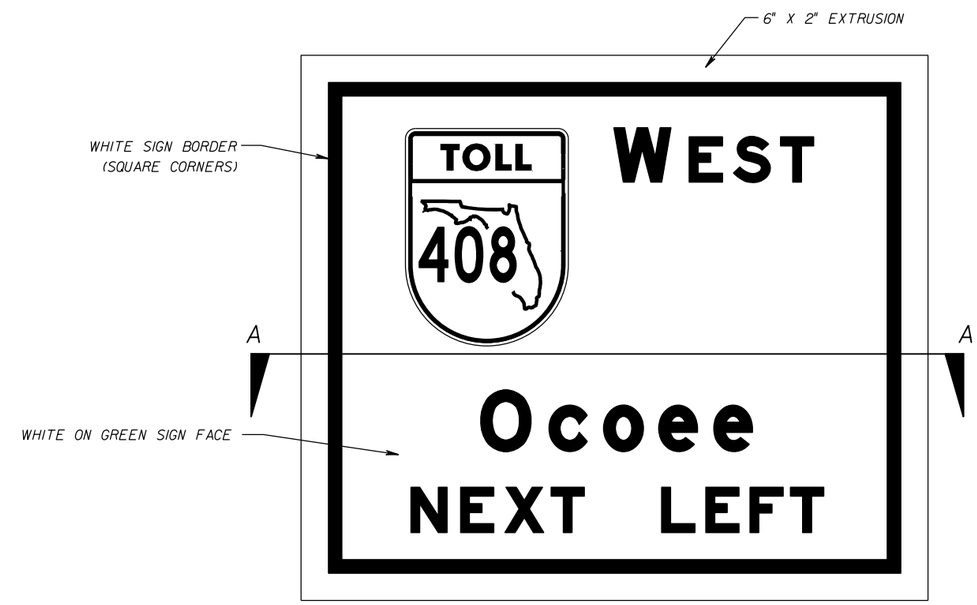

FRONT VIEW

BRIDGE MOUNTED SIGNS

PRIOR TO FABRICATION OF THE BRIDGE MOUNTED SIGNS, THE SIGN FRAME CONTRACTOR SHALL SUBMIT SHOP DRAWINGS AND A SAMPLE OF THE FRAME MATERIAL, AND DETAILS FOR FABRICATION AND ATTACHMENT OF THE FRAME TO THE SIGN PANEL. THE FRAME SHALL BE A LIGHTWEIGHT METAL FRAME AND NOT WOODEN. THE FRAME SHALL BE PAINTED BLACK PER THE SPECIFICATIONS. ALL COSTS SHALL BE INCIDENTAL TO THE DESIGN AND MANUFACTURE OF THE SIGN.

THE SIGN SHALL CONFORM TO AASHTO REQUIREMENTS FOR SIGN STRUCTURES AND LUMINAIRES.

THE SIGN SHALL CONFORM TO GEOMETRY SHOWN HOWEVER DETAILING MAY BE DIFFERENT.

NOTES TO CONSULTANT:

1. THIS DETAIL IS FOR USE ONLY ON SR 408 CROSSROAD BRIDGE MOUNTED GUIDE SIGNS FROM KIRKMAN ROAD TO CHICKASAW TRAIL.

2. DELETE THIS BOX AND NOTES PRIOR TO INCLUDING IN PLANS.

REVISIONS					
DATE	BY	DESCRIPTION	DATE	BY	DESCRIPTION

CENTRAL FLORIDA EXPRESSWAY AUTHORITY

BRIDGE-MOUNTED SIGN FRAME DETAIL

PROJECT	SHEET NO.
STANDARDS	27

MULTI-POST SIGN DATA									
HORIZONTAL CLEARANCE (A) (ft)	STATION	SIGN NO.	SIGN SIZE (D x W) (ft)	SIDE SLOPE (RISE:RUN)	CLEAR HEIGHT (ft)	NO. OF POSTS	AVERAGE LENGTH OF POSTS (ft)	STEEL POSTS	ALUMINUM I-BEAMS

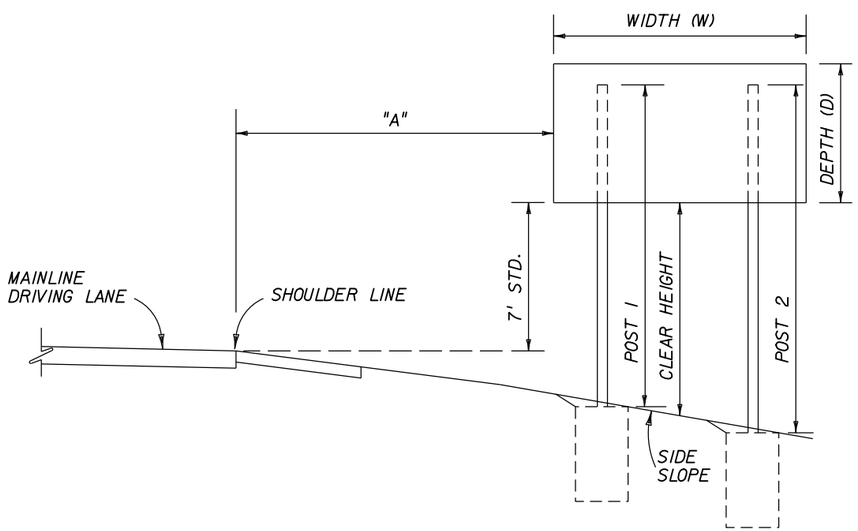

TYPICAL SECTION FOR PLACEMENT OF MULTI-POST SIGNS

NOTES:

1. FOR ADDITIONAL DETAILS AND NOTES SEE FDOT STANDARD INDEX NOS. 11200 AND 17302.
2. AUXILIARY SIGN PANELS ARE ATTACHED IN ACCORDANCE WITH FDOT STANDARD INDEX NO. 13417. THESE AUXILIARY PANELS CAN BE CENTERED, LEFT OR RIGHT JUSTIFIED PER PLANS.
3. CLEAR HEIGHT IS THE DISTANCE BETWEEN THE BOTTOM OF THE MAIN SIGN PANEL AND THE GROUND AT THE CENTER OF THE MAIN SIGN PANEL.
4. AVERAGE LENGTH OF POSTS COLUMN IS APPLICABLE TO STEEL POSTS AND ALUMINUM BEAMS.
5. SIGN ASSEMBLIES ARE DESIGNED FOR XXX MPH WIND SPEED AND SHALL CONFORM TO AASHTO STANDARD SPECIFICATIONS FOR STRUCTURAL SUPPORTS FOR HIGHWAY SIGNS, LUMINAIRIES AND TRAFFIC SIGNALS, XXXX EDITION.

NOTES TO CONSULTANT:

1. CONSULTANT SHALL INSERT APPLICABLE DESIGN WIND SPEED INTO NOTE 5 DEPENDING ON PROJECT LOCATION.
2. CONSULTANT SHALL INSERT APPLICABLE DATE INTO NOTE 5 FOR THE SPECIFIED AASTHO PUBLICATION.
3. DELETE THIS BOX AND NOTES PRIOR TO INCLUDING SHEET IN PLANS.

REVISIONS					
DATE	BY	DESCRIPTION	DATE	BY	DESCRIPTION

CENTRAL FLORIDA EXPRESSWAY AUTHORITY

MULTI-POST SIGN TABLE OF VARIABLES

PROJECT	SHEET NO.
STANDARDS	28

LOCATION DATA FOR PROPOSED PANELS ON EXISTING STRUCTURES												
STRUCTURE NUMBER	DESCRIPTION	STATION	PANEL 1		PANEL 2		PANEL LOCATION					
			NO.	DIMENSION	NO.	DIMENSION	(B)	(C)	(D)	(E)	(F)	(G)
OT-2	SPAN	1238+75	105A	21'-6" X 7'-0"	105B	21'-6" X 18'-0"	52'-9"	28'-3"	8'-3"	9'-9"	8'-3"	8'-3"
OT-17	SPAN	1478+43	170	19'-6" X 9'-0"	---	---	69'-6"	---				

** SEE GUIDE SIGN WORKSHEET FOR SIGNS WITH AN EXIT NUMBER PANEL. EXIT NUMBER PANELS SHALL BE INSTALLED IN COMPLIANCE WITH INDEX 13417.

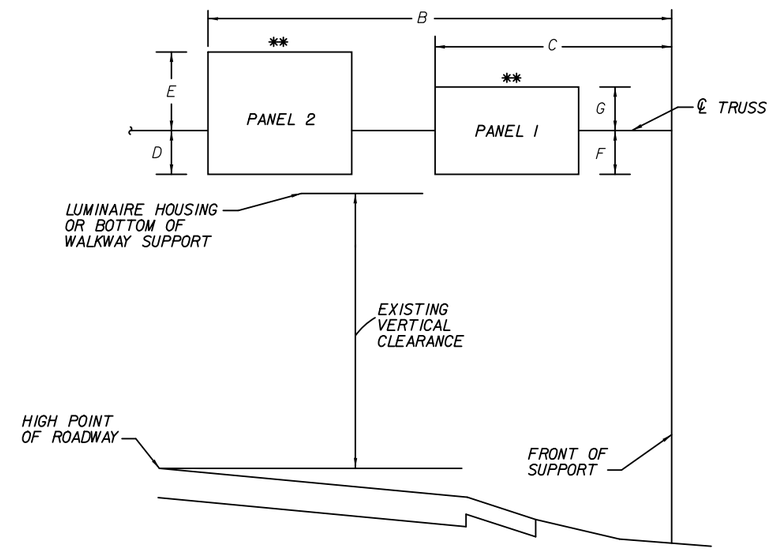

SCHEMATIC ELEVATION

NOTES TO CONSULTANT:

1. OT-2 AND OT-17 SHOWN FOR EXAMPLE PURPOSES ONLY.
2. ADD OR DELETE NOTES AND/OR COLUMNS, AS NECESSARY FOR SPECIFIC PROJECT.
3. ADD PAY ITEM NOTE(S) ON APPROPRIATE SHEET ADDRESSING ITEMS 2 AND 3 IN NOTES ON THIS SHEET.
4. REMOVE BOX WITH NOTES PRIOR TO INCLUDING SHEET IN PLANS.

NOTES:

1. MAINTAIN A MINIMUM VERTICAL CLEARANCE OF 17'-6" FOR ALL SIGN PANELS.
2. REMOVAL OF EXISTING PANELS AND ALL ASSOCIATED HARDWARE, LIGHTING, ETC. IS INCIDENTAL TO COST OF PROPOSED PANEL INSTALLATION.
3. ADJUSTMENT OF EXISTING PANEL LOCATIONS AND ALL ASSOCIATED ELEMENTS IS INCIDENTAL TO THE COST OF PROPOSED PANEL INSTALLATION.
4. PROPOSED PANEL LOCATIONS ARE BASED ON AS-BUILT DRAWINGS AND/OR SHOP DRAWINGS BELIEVED TO BE ACCURATE. CONTRACTOR SHALL VERIFY ALL NECESSARY CONDITIONS PRIOR TO PANEL INSTALLATIONS AND NOTIFY CEI OF ANY DISCREPANCIES FOR POSSIBLE RE-EVALUATION.

REVISIONS					
DATE	BY	DESCRIPTION	DATE	BY	DESCRIPTION

CENTRAL FLORIDA EXPRESSWAY AUTHORITY

PANEL LOCATIONS ON EXISTING STRUCTURES

PROJECT	SHEET NO.
STANDARDS	29

NOTES:

1) Grout shall be a non-shrink grout with a mnimum 5.0 ksi compressive strength at 3-days. Conform to Specification Section 934.

2) Grouting:

a) Preparation: Flush the top of the foundation with clean water to remove any dirt and debris. Immediately before grouting, saturate the concrete surfaces by ponding or by placement of saturated rags for a minimum period of two hours. Remove all freestanding water before beginning the grouting operation.

b) Forming: Use watertight non-absorbent forms with a form release agent applied to all interior surfaces. Maintain a 1 inch (25 mm) clearance between the forms and the base plate. Extend the form a minimum of 1 inch (25 mm) above the bottom of the base plate. Attach a head box with a 45 degree slope on the form for grout placement.

c) Mixing: Use only fresh unopened full bags of grout. Mix the grout in a clean, power driven mortar mixer or with a heavy duty drill (850 RPM maximum) using a commercial mixing paddle. Mix the grout in accordance with the manufacturer's instructions. Test the fluidity of the grout using the ASTM C 939 Flow Cone Method. Use grouts that meet the efflux time of 20 to 30 seconds. Do not remix grouts that have begun to set.

d) Placing and Curing: Pour the grout from only one side of the base plate through the head box until the grout has filled the entire form and extends a minimum of 1/4 inch (6 mm) above the bottom of the base plate. Do not allow the grout to overtop the base plate. Do not vibrate grout. Clean excess grout off the base plate after the grout has reached initial set (two to four hours). Cure the grout for a minimum of six hours by covering the entire grout surface with clean saturated rags. Remove the forms after verifying the grout is self supporting by penetration with a pointed masons trowel or other sufficient tool. Cure all exposed grout with a membrane curing compound.

3) The CEI shall exercise special attention during the grouting operation to assure complete grout placement under the base plate.

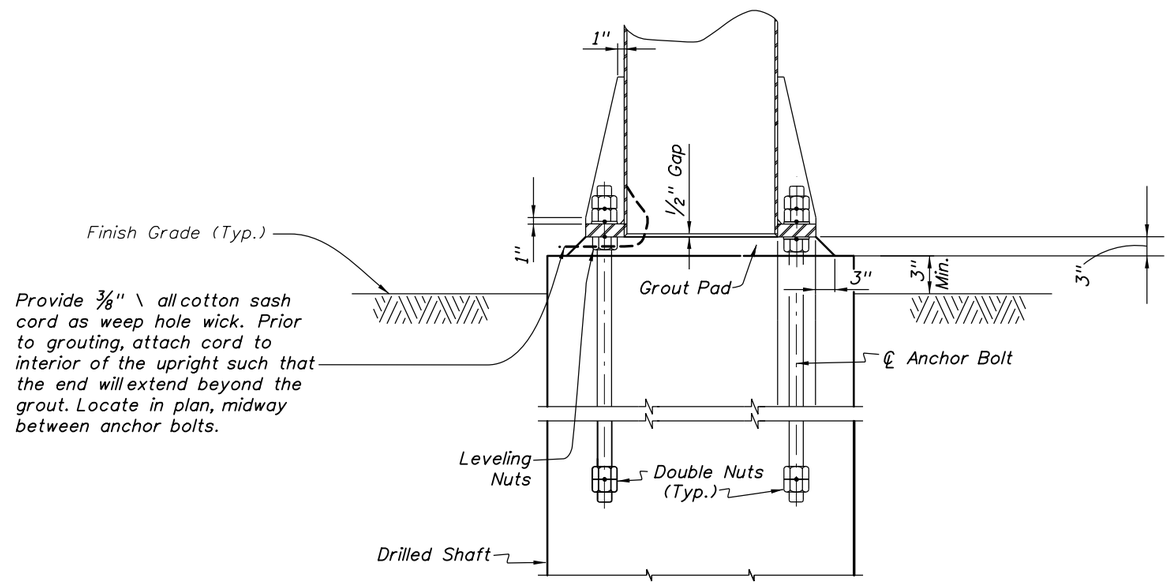

BASE PLATE GROUTING DETAIL

REVISIONS					
DATE	BY	DESCRIPTION	DATE	BY	DESCRIPTION

CENTRAL FLORIDA EXPRESSWAY AUTHORITY

SPAN AND CANTILEVER SIGN STRUCTURES
BASE PLATE GROUTING DETAILS

PROJECT	SHEET NO.
STANDARDS	30

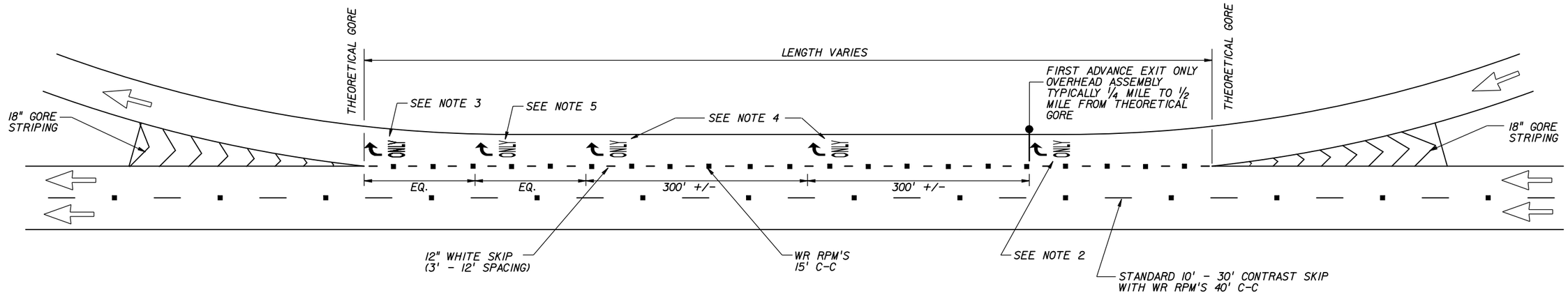

NOTES:

1. INDICATES DIRECTION OF TRAFFIC.
2. FIRST SET OF PAVEMENT MARKING MESSAGES SHALL BE PLACED IN THE VICINITY OF THE FIRST ADVANCE EXIT ONLY OVERHEAD ASSEMBLY GUIDE SIGN.
3. LAST SET OF PAVEMENT MARKING MESSAGES SHALL BE PLACED AT THE THEORETICAL GORE.
4. PAVEMENT MARKING MESSAGES BETWEEN FIRST AND LAST SETS ARE TO BE EQUALLY SPACED 300 FT (+/-) APART.
5. AN ADDITIONAL SET OF MARKINGS SHOULD BE INSTALLED BETWEEN THE LAST SET (THEORETICAL GORE) AND SECOND TO LAST SET. SPACING SHOULD BE EQUIDISTANT APPROXIMATELY 150 (+/-).

DETAIL A

AUXILIARY LANE BETWEEN INTERCHANGES

N.T.S.

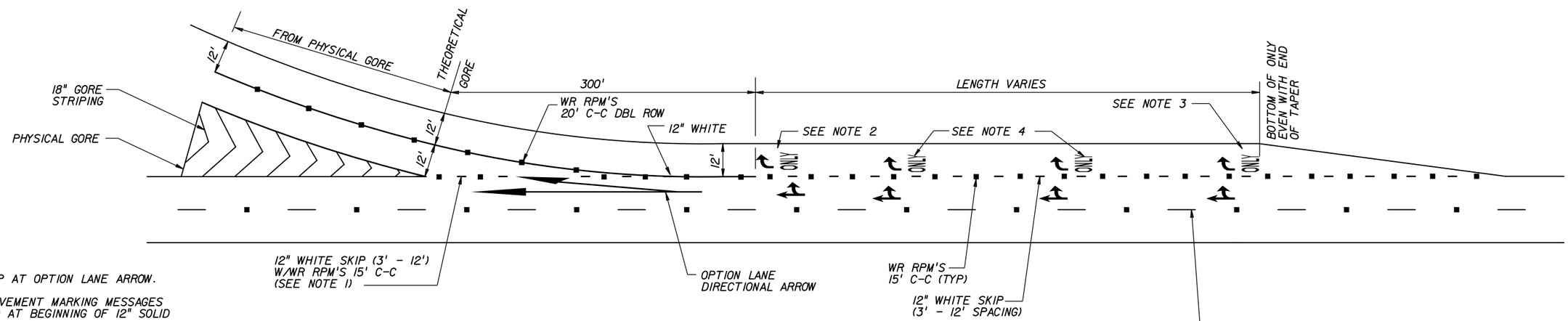

NOTE:

1. BREAK 3'-12' SKIP AT OPTION LANE ARROW.
2. LAST SET OF PAVEMENT MARKING MESSAGES SHALL BE PLACED AT BEGINNING OF 12" SOLID LINE AS SHOWN.
3. FIRST SET OF PAVEMENT MARKING MESSAGES SHALL BE PLACED AT BEGINNING OF PARALLEL DECELERATION LANE (FULL 12 FT LANE WIDTH).
4. PAVEMENT MARKING MESSAGES BETWEEN FIRST AND LAST SETS ARE TO BE EQUALLY SPACED AND SHOULD BE 150 TO 200 FT (+/-) APART DEPENDING ON LENGTH OF PARALLEL DECELERATION LANE.

DETAIL B

TWO LANE EXIT - WITH OPTIONAL LANE

N.T.S.

REVISIONS					
DATE	BY	DESCRIPTION	DATE	BY	DESCRIPTION

CENTRAL FLORIDA EXPRESSWAY AUTHORITY

SPECIAL PAVEMENT MARKINGS AREAS

PROJECT	SHEET NO.
STANDARDS	31

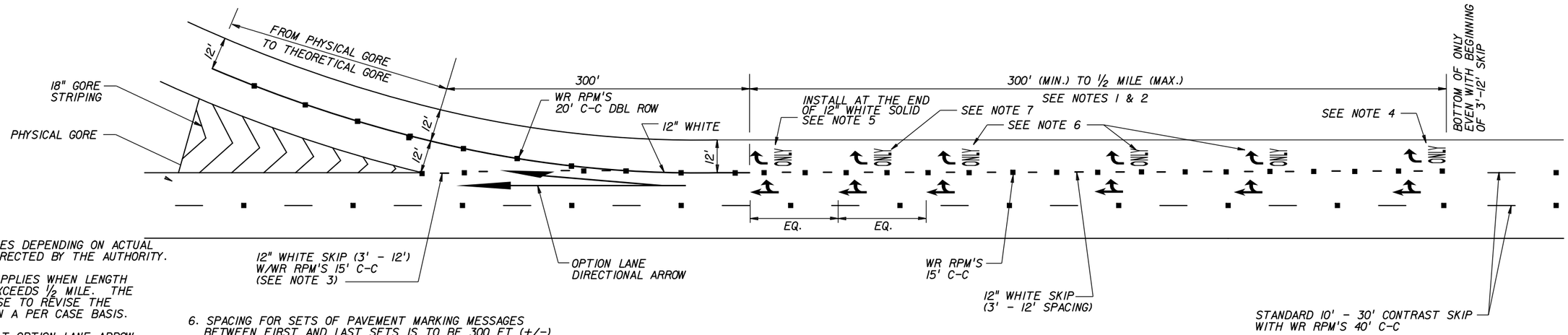

NOTES:

1. MINIMUM LENGTH VARIES DEPENDING ON ACTUAL GEOMETRY OR AS DIRECTED BY THE AUTHORITY.
2. MAXIMUM DISTANCE APPLIES WHEN LENGTH OF DROPPED LANE EXCEEDS 1/2 MILE. THE AUTHORITY MAY CHOOSE TO REVISE THE MAXIMUM DISTANCE ON A PER CASE BASIS.
3. BREAK 3'-12' SKIP AT OPTION LANE ARROW.
4. FIRST SET OF PAVEMENT MARKING MESSAGES TO BE PLACED AT BEGINNING OF 12" (3'-12') SKIP AS SHOWN.
5. LAST SET OF PAVEMENT MARKING MESSAGES TO BE PLACED AT BEGINNING OF 12" SOLID LINE AS SHOWN.
6. SPACING FOR SETS OF PAVEMENT MARKING MESSAGES BETWEEN FIRST AND LAST SETS IS TO BE 300 FT (+/-) EQUALLY SPACED.
7. AN ADDITIONAL SET OF MARKING SHOULD BE INSTALLED BETWEEN THE LAST SET (THEORETICAL GORE) AND 2ND TO LAST SET. SPACING SHOULD BE EQUIDISTANT APPROXIMATELY 150 (+/-).

DETAIL C

TWO LANE EXIT - WITH OPTIONAL LANE
(MAINLINE LANE DROP)
N.T.S.

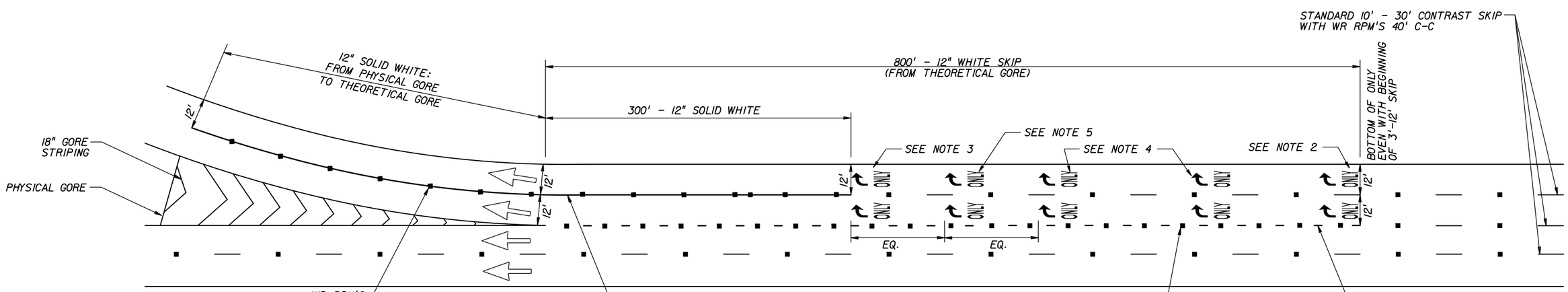

NOTES:

1. INDICATES DIRECTION OF TRAFFIC.
2. FIRST SET OF PAVEMENT MARKING MESSAGES TO BE PLACED AT BEGINNING OF 12" (3'-12') SKIP AS SHOWN.
3. LAST SET OF PAVEMENT MARKING MESSAGES TO BE PLACED AT BEGINNING OF 12" SOLID LINE AS SHOWN.
4. SPACING FOR SETS OF PAVEMENT MARKING MESSAGES BETWEEN FIRST AND LAST SETS IS TO BE 300 FT (+/-) EQUALLY SPACED.
5. AN ADDITIONAL SET OF MARKING SHOULD BE INSTALLED BETWEEN THE LAST SET (THEORETICAL GORE) AND 2ND TO LAST SET. SPACING SHOULD BE EQUIDISTANT APPROXIMATELY 150 (+/-).

DETAIL D

TWO LANE EXIT - WITHOUT OPTIONAL LANE
(MAINLINE LANE DROP)
N.T.S.

REVISIONS					
DATE	BY	DESCRIPTION	DATE	BY	DESCRIPTION

CENTRAL FLORIDA EXPRESSWAY AUTHORITY

SPECIAL PAVEMENT MARKINGS AREAS

PROJECT	SHEET NO.
STANDARDS	32

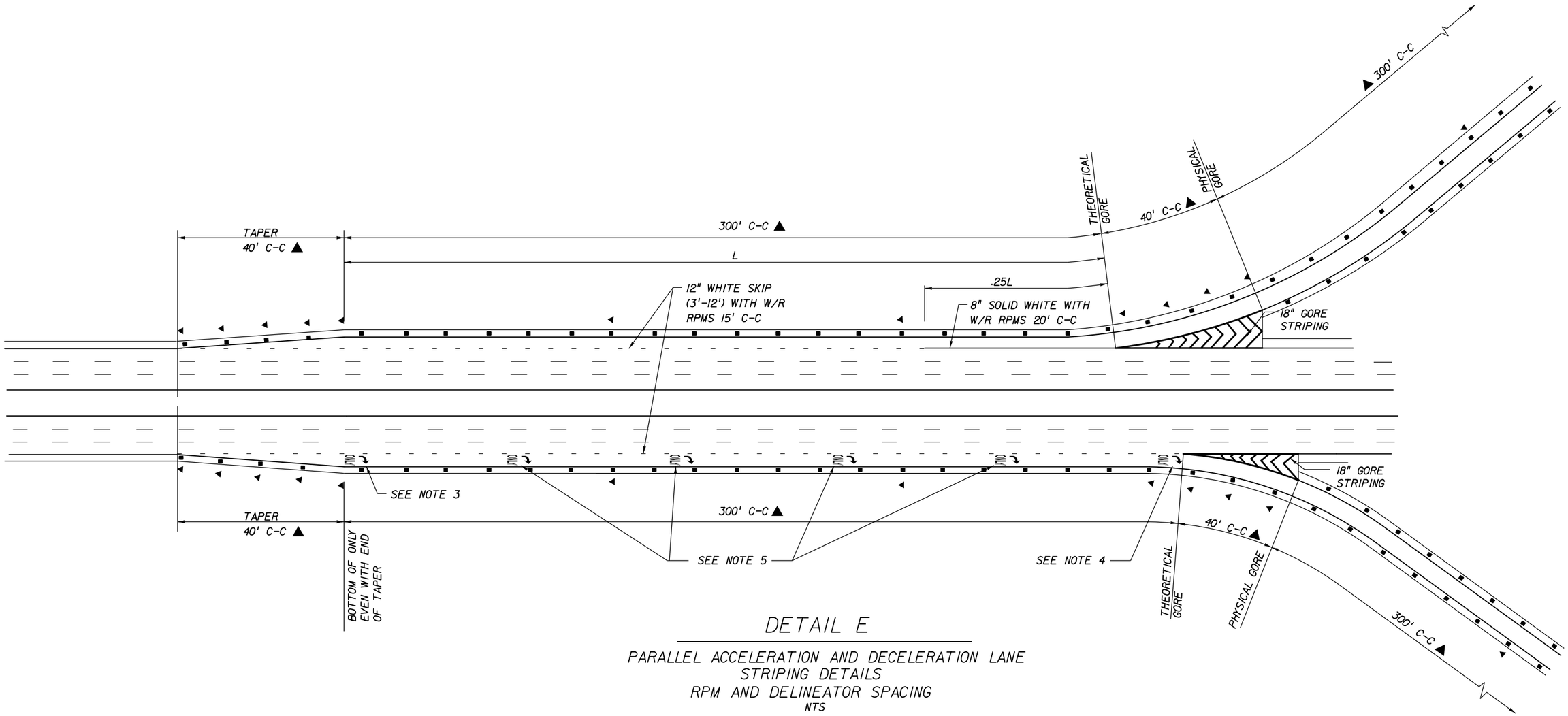

DETAIL E

PARALLEL ACCELERATION AND DECELERATION LANE
STRIPING DETAILS
RPM AND DELINEATOR SPACING
NTS

NOTES:

1. ◀ = DELINEATORS
   ■ = RPMS
2. EDGE LINE RPM SPACING IS 40' C-C THROUGH FULL LENGTH OF ACCEL/DECEL LANES, TAPERS AND RAMPS.
3. FIRST SET OF PAVEMENT MARKING MESSAGES SHALL BE PLACED AT BEGINNING OF PARALLEL DECELERATION LANE (FULL 12' LANE WIDTH).
4. LAST SET OF PAVEMENT MARKING MESSAGES SHALL BE PLACED AT THE THEORETICAL GORE AS SHOWN.
5. PAVEMENT MARKING MESSAGES BETWEEN FIRST AND LAST SETS ARE TO BE EQUALLY SPACED AND SHOULD BE 150 TO 200 FT (+/-) APART DEPENDING ON LENGTH OF PARALLEL DECELERATION LANE.

REVISIONS					
DATE	BY	DESCRIPTION	DATE	BY	DESCRIPTION

CENTRAL FLORIDA EXPRESSWAY AUTHORITY

PARALLEL ACCEL / DECEL LANE STRIPING DETAILS DELINEATOR SPACING

PROJECT	SHEET NO.
STANDARDS	33

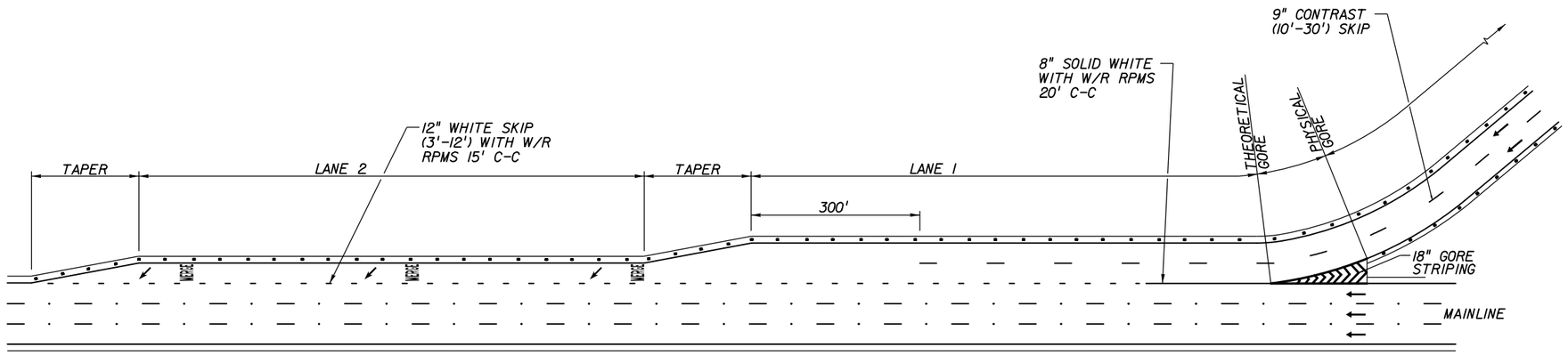

DETAIL F

DUAL LANE ON RAMP STRIPING DETAILS

NTS

NOTES:

1. THREE (3) TO FOUR (4) SETS OF MERGE PAVEMENT MESSAGES AND ARROWS ARE PREFERRED DEPENDING ON LENGTH OF LANE 2. A MINIMUM OF TWO (2) SETS IS REQUIRED.
2. ← INDICATES DIRECTION OF TRAFFIC.

REVISIONS					
DATE	BY	DESCRIPTION	DATE	BY	DESCRIPTION

CENTRAL FLORIDA EXPRESSWAY AUTHORITY

DUAL LANE ON RAMP STRIPING DETAILS

PROJECT	SHEET NO.
STANDARDS	34

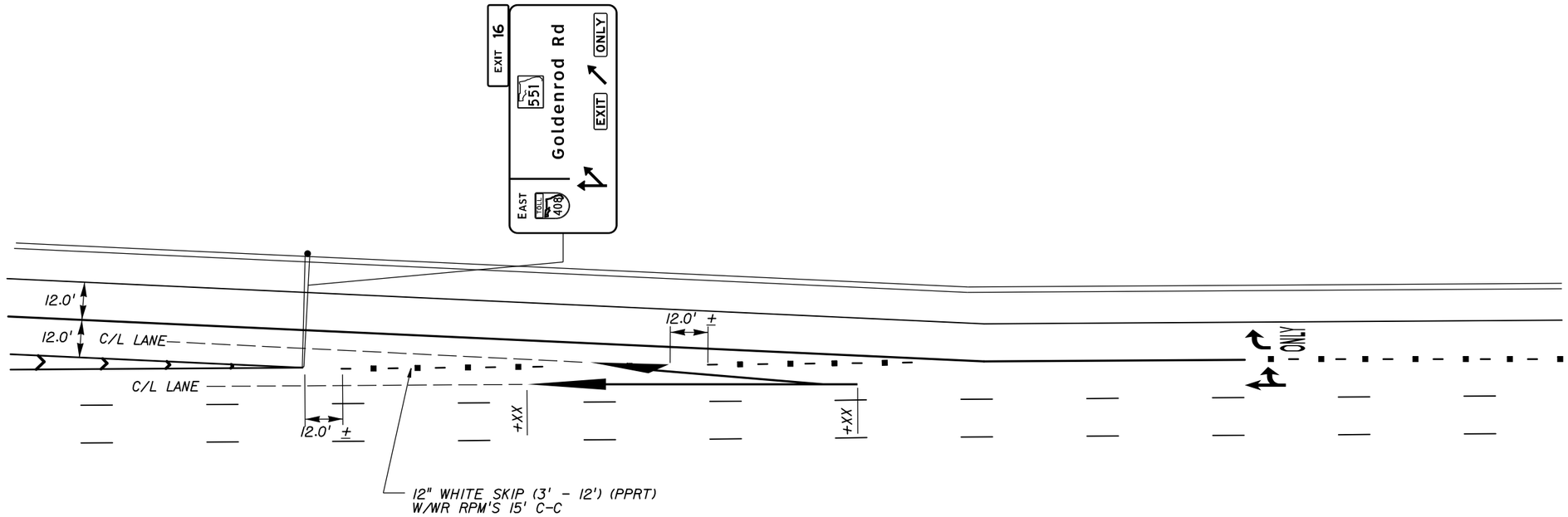

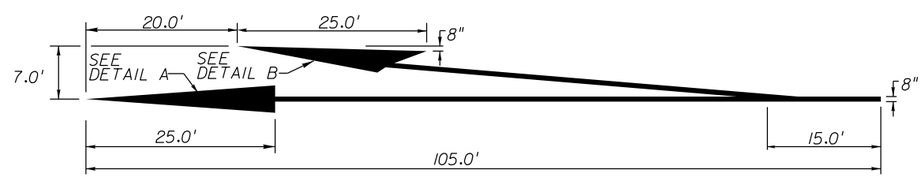

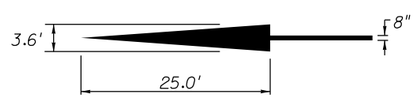

ARROW DETAIL
"A"

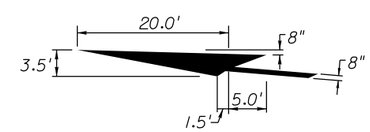

ARROW DETAIL
"B"

NOTE:

OPTION LANE ARROW ON ASPHALT SHALL BE WHITE.

OPTION LANE
DIRECTIONAL ARROW DETAIL
ASPHALT SURFACES

REVISIONS					
DATE	BY	DESCRIPTION	DATE	BY	DESCRIPTION

CENTRAL FLORIDA EXPRESSWAY AUTHORITY

ASPHALT SURFACES OPTION LANE
ARROW DETAIL WITH
3'-12' SKIP AT GORE

PROJECT	SHEET NO.
STANDARDS	35

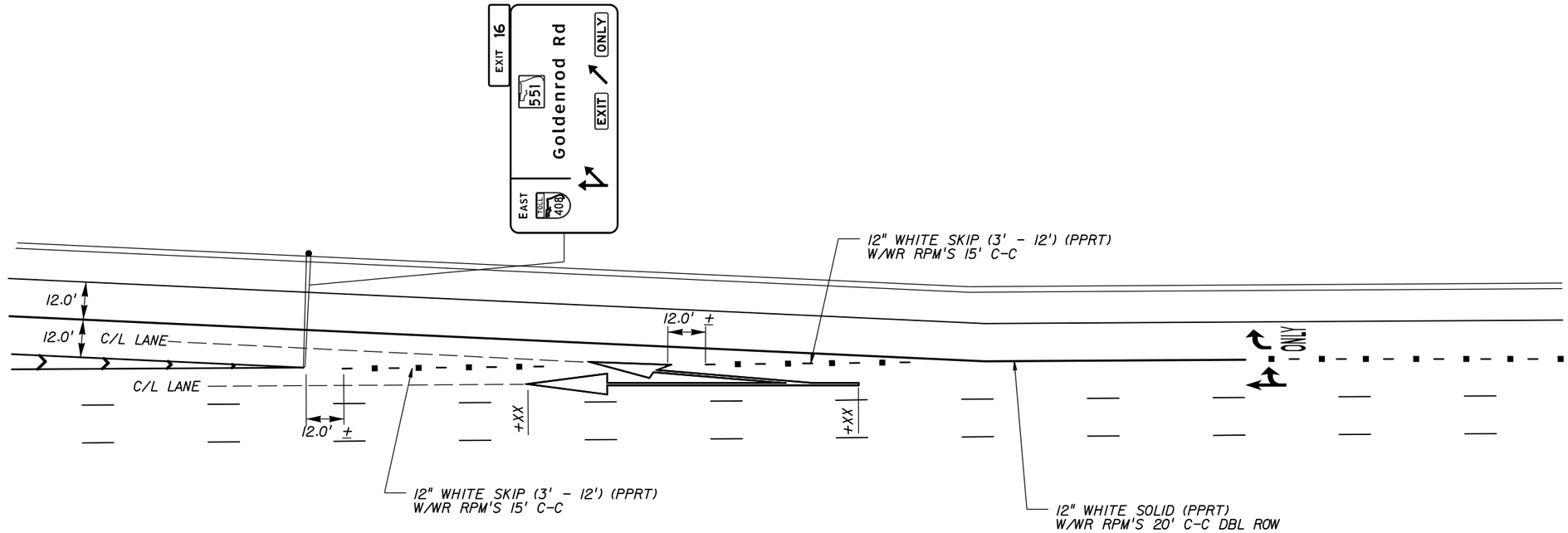

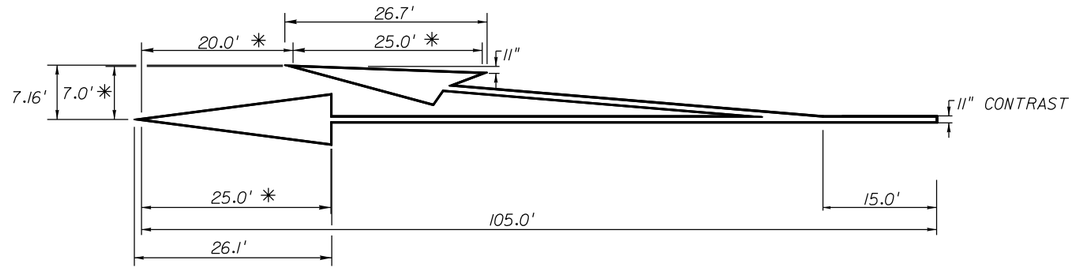

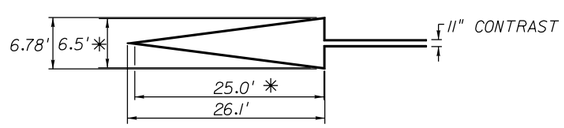

ARROW DETAIL
"A"

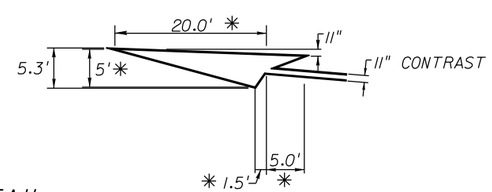

ARROW DETAIL
"B"

OPTION LANE
DIRECTIONAL ARROW DETAIL
CONCRETE SURFACES

PPRT OR PREFORMED THERMO ONLY

NOTES:

1. CONTRAST CONSISTS OF 8" WHITE BORDERED LONGITUDINALLY ON BOTH SIDES WITH A 1½" BLACK MATTE CONTRASTING TAPE OR PREFORMED THERMO FOR A TOTAL OF 11".
2. ✳ INDICATES DIMENSIONS FOR WHITE PORTION OF ARROWS.

REVISIONS					
DATE	BY	DESCRIPTION	DATE	BY	DESCRIPTION

CENTRAL FLORIDA EXPRESSWAY AUTHORITY

CONCRETE SURFACES OPTION LANE
ARROW DETAIL WITH
3'-12' SKIP AT GORE

PROJECT	SHEET NO.
STANDARDS	36

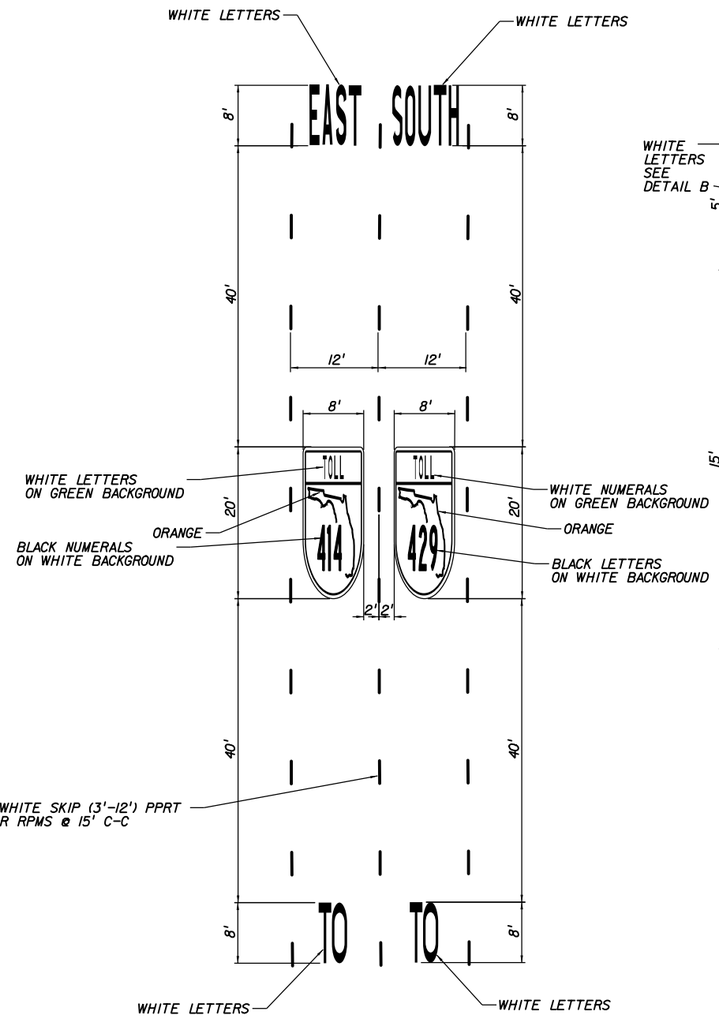

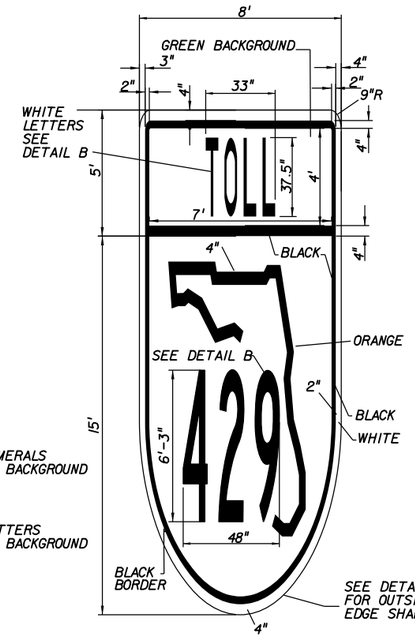

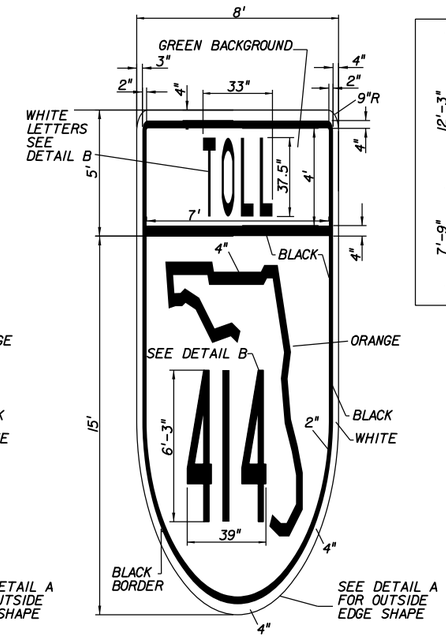

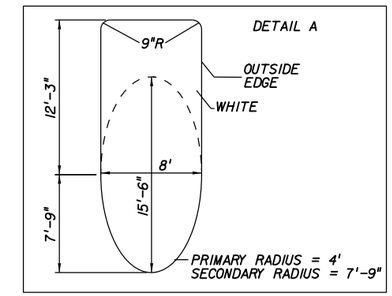

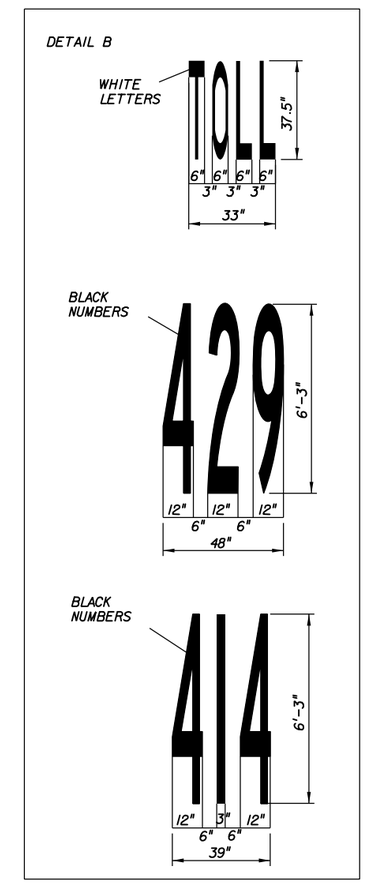

NOTES TO CONSULTANT:

1. NOTES 3 AND 4 ARE SUBJECT TO CHANGE DEPENDING ON ACTUAL MATERIAL AS DETERMINED BY THE AUTHORITY.
2. CONSULTANT TO REVISE ROUTE NUMBER(S) AND CARDINAL DIRECTION(S) TO SUIT SPECIFIC PROJECT.
3. DELETE BOX AND NOTES PRIOR TO INCLUDING SHEET IN PLAN.

NOTES:

1. EACH WORD OR SYMBOL SHALL BE CENTERED WITHIN TRAVEL LANE
2. "EAST", "SOUTH", AND "TO" SHALL BE FABRICATED USING STANDARD HIGHWAY PAVEMENT MESSAGE LETTERS.
3. PAVEMENT MESSAGES SHALL BE ENNIS-FLINT PREMARK PREFORMED THERMOPLASTIC OR AUTHORITY APPROVED EQUAL.
4. PAVEMENT SYMBOLS SHALL BE ENNIS-FLINT PREMARK/DECOMARK INTERCONNECTED PREFORMED THERMOPLASTIC OR AUTHORITY APPROVED EQUAL.

REVISIONS					
DATE	BY	DESCRIPTION	DATE	BY	DESCRIPTION

CENTRAL FLORIDA EXPRESSWAY AUTHORITY

PREFORMED HORIZONTAL SIGNING DETAILS

PROJECT	SHEET NO.
STANDARDS	37

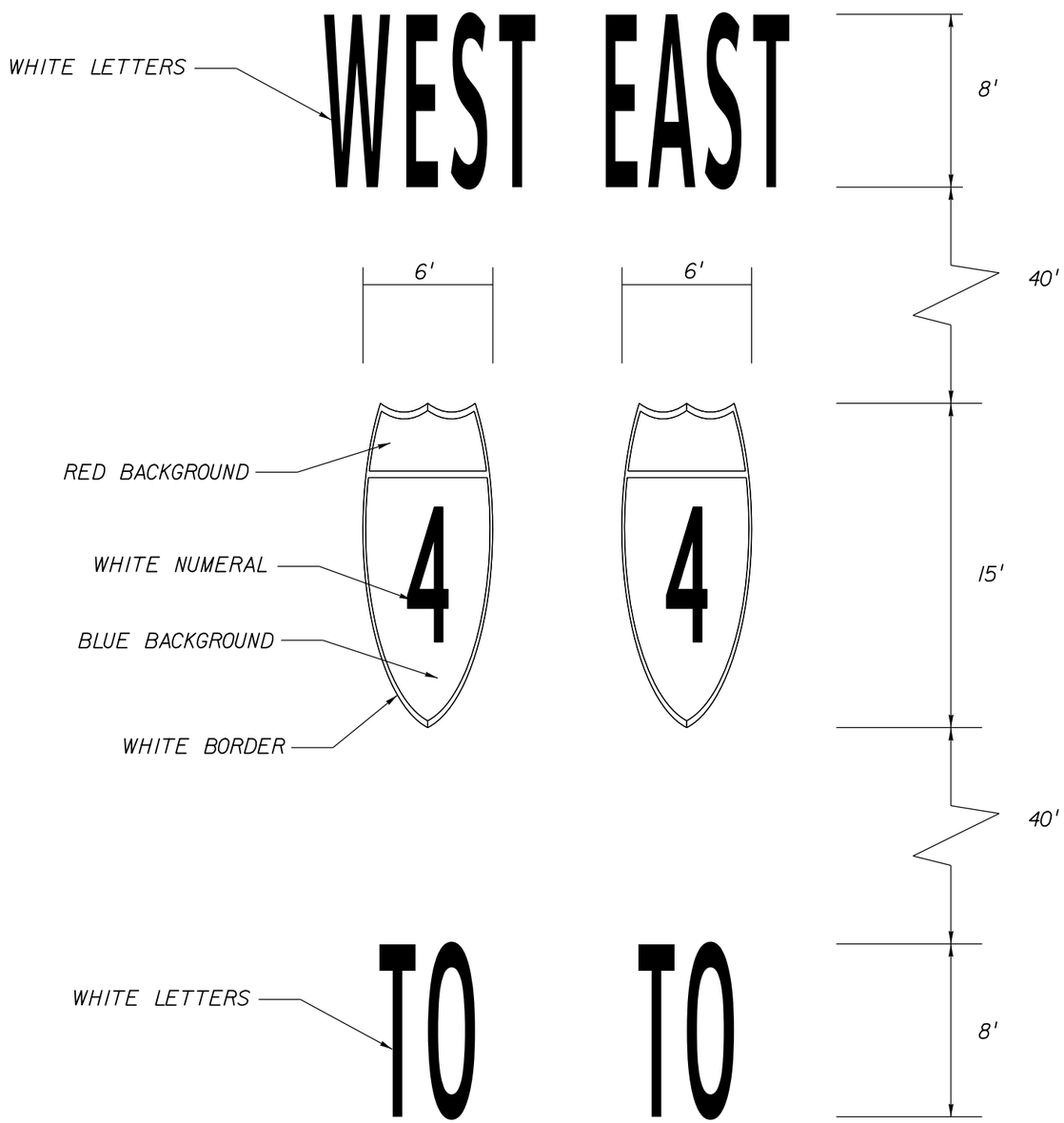

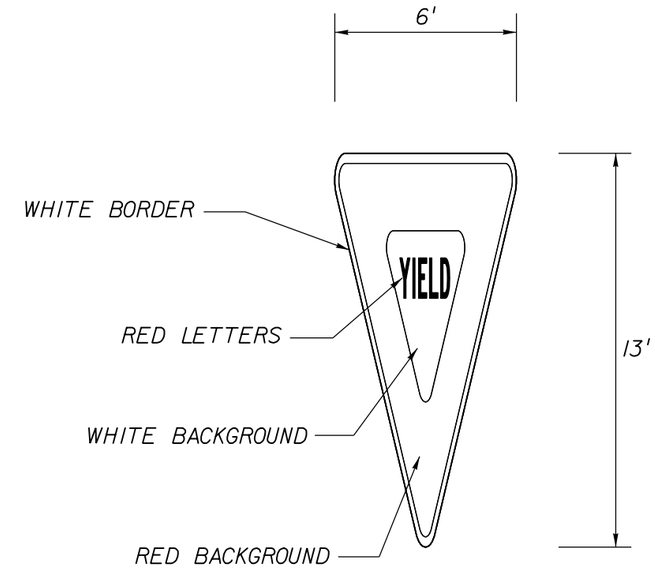

NOTES TO CONSULTANT:

1. NOTES 3 AND 4 ARE SUBJECT TO CHANGE DEPENDING ON ACTUAL MATERIAL AS DETERMINED BY THE AUTHORITY.
2. CONSULTANT TO REVISE ROUTE NUMBER(S) AND CARDINAL DIRECTION(S) TO SUIT SPECIFIC PROJECT.
3. DELETE BOX AND NOTES PRIOR TO INCLUDING SHEET IN PLAN.

NOTES:

1. EACH WORD OR SYMBOL SHALL BE CENTERED WITHIN TRAVEL LANE.
2. EAST, WEST AND TO SHALL BE FABRICATED USING STANDARD HIGHWAY PAVEMENT MESSAGE LETTERS.
3. PAVEMENT MESSAGES SHALL BE ENNIS-FLINT PREMARK PREFORMED THERMOPLASTIC OR AUTHORITY APPROVED EQUAL.
4. PAVEMENT SYMBOLS SHALL BE ENNIS-FLINT PREMARK/DECOMARK INTERCONNECTED PREFORMED THERMOPLASTIC OR AUTHORITY APPROVED EQUAL.

REVISIONS					
DATE	BY	DESCRIPTION	DATE	BY	DESCRIPTION

CENTRAL FLORIDA EXPRESSWAY AUTHORITY

PREFORMED HORIZONTAL SIGNING DETAILS

PROJECT	SHEET NO.
STANDARDS	38

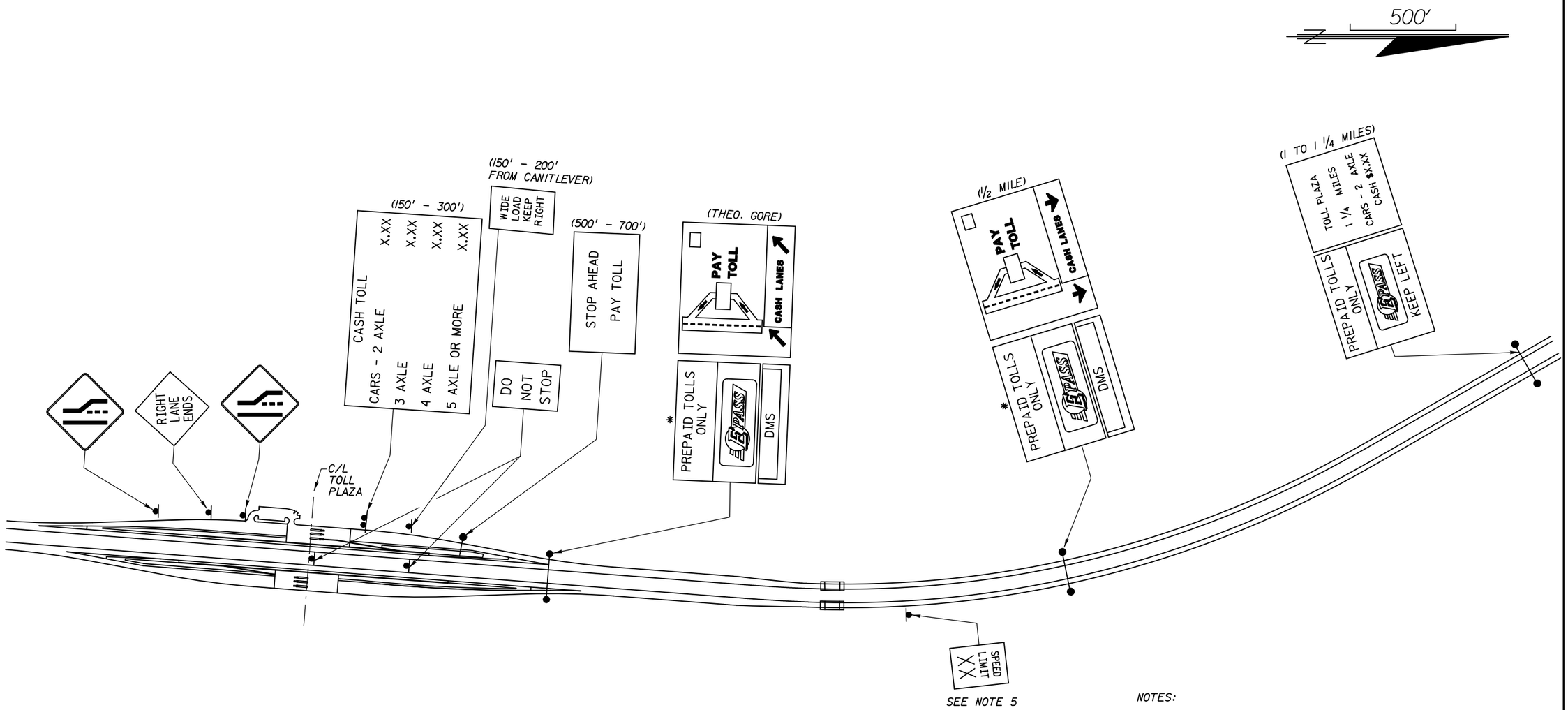

NOTES:

1. LOCATION OF ADVANCED SIGNS ON MAINLINE MEASURED FROM THE CENTERLINE OF THE TOLL PLAZA.
2. * PANELS ARE IN TWO PIECES:
   ONE STATIC PANEL
   ONE SINGLE LINE DMS BOX
3. SOUTHBOUND SIGNING SHOWN. NORTHBOUND SIGNING IS IDENTICAL DEPENDENT ON ACTUAL GEOMETRY.
4. THE GORE STRUCTURE LOCATION WILL BE FIXED BY THE THEORETICAL GORE. ALL OTHER SIGN ASSEMBLY LOCATIONS ARE APPROXIMATE AND DEPENDENT ON ACTUAL GEOMETRY.
5. LOCATE APPROXIMATELY 500' FROM THE END OF PAVEMENT TAPER

REVISIONS					
DATE	BY	DESCRIPTION	DATE	BY	DESCRIPTION

CENTRAL FLORIDA EXPRESSWAY AUTHORITY

TYPICAL MAINLINE PLAZA SIGNING APPROACH / DEPARTURE

PROJECT	SHEET NO.
STANDARDS	39

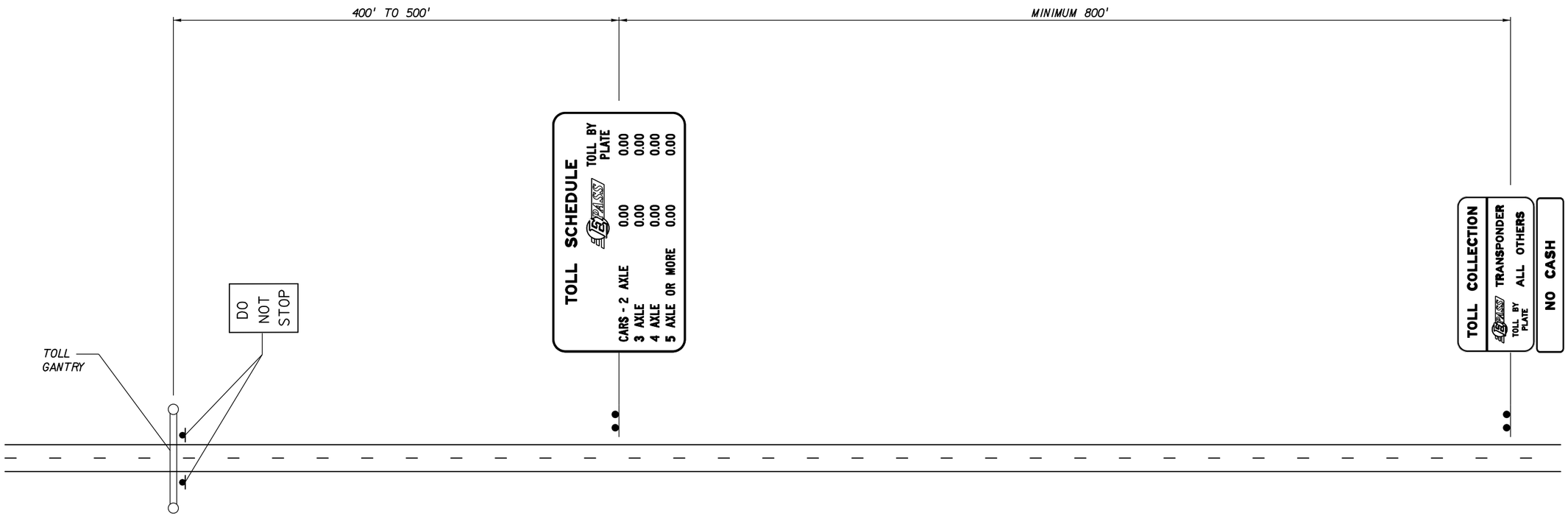

USER: ST0D3416 10/23/2014 11:18:41 AM T:\Cadd\CFXway Standards 2014\A3-18A-1.dgn

REVISIONS					
DATE	BY	DESCRIPTION	DATE	BY	DESCRIPTION

CENTRAL FLORIDA EXPRESSWAY AUTHORITY

TYPICAL MAINLINE AET GANTRY APPROACH SIGNING

PROJECT	SHEET NO.
STANDARDS	40

NOTES:

1. AS DIRECTED BY THE AUTHORITY, SIGN PANELS MAY BE: TRUSS OR CANOPY MOUNTED

2. USE ONLY WHEN DIRECTED BY THE AUTHORITY OR WHEN SHOWN ON THE CSP

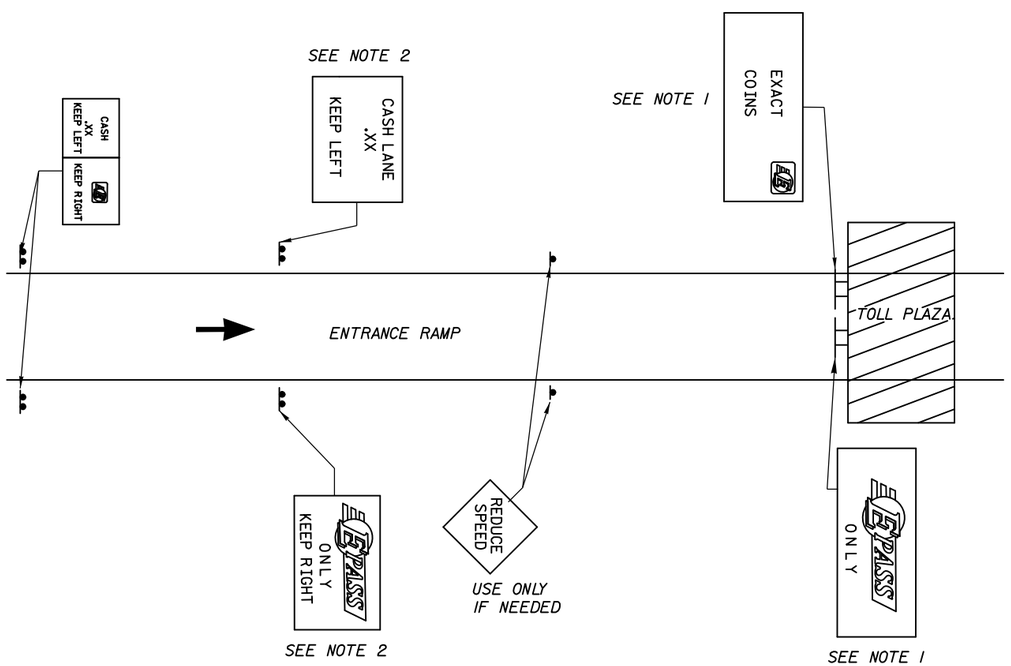

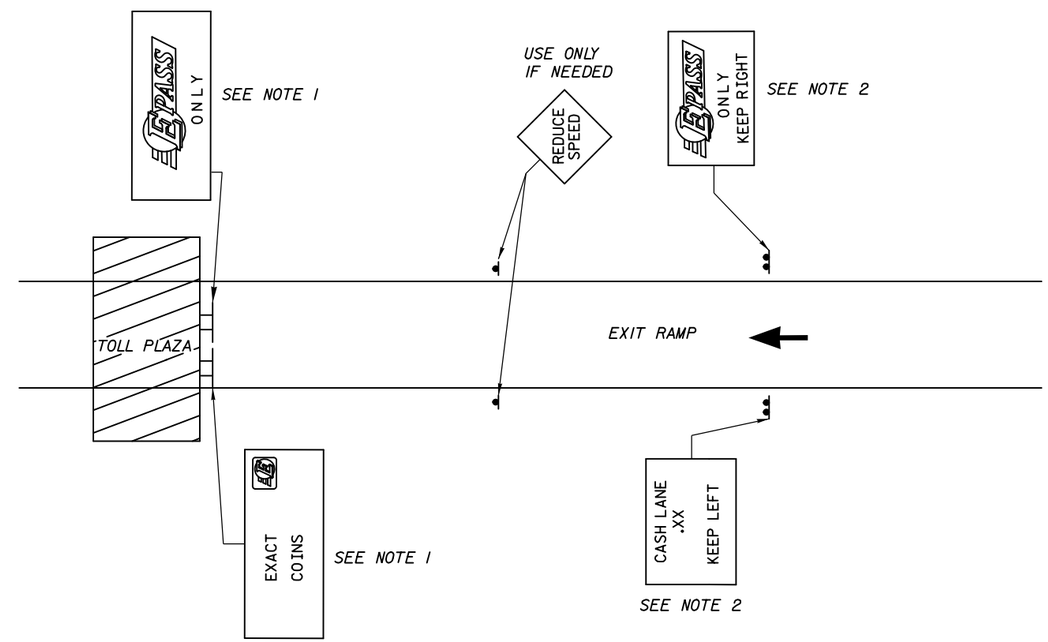

NTS

REVISIONS					
DATE	BY	DESCRIPTION	DATE	BY	DESCRIPTION

CENTRAL FLORIDA EXPRESSWAY AUTHORITY

TYPICAL TWO-LANE RAMP ADVANCE PLAZA SIGNING

PROJECT	SHEET NO.
STANDARDS	41

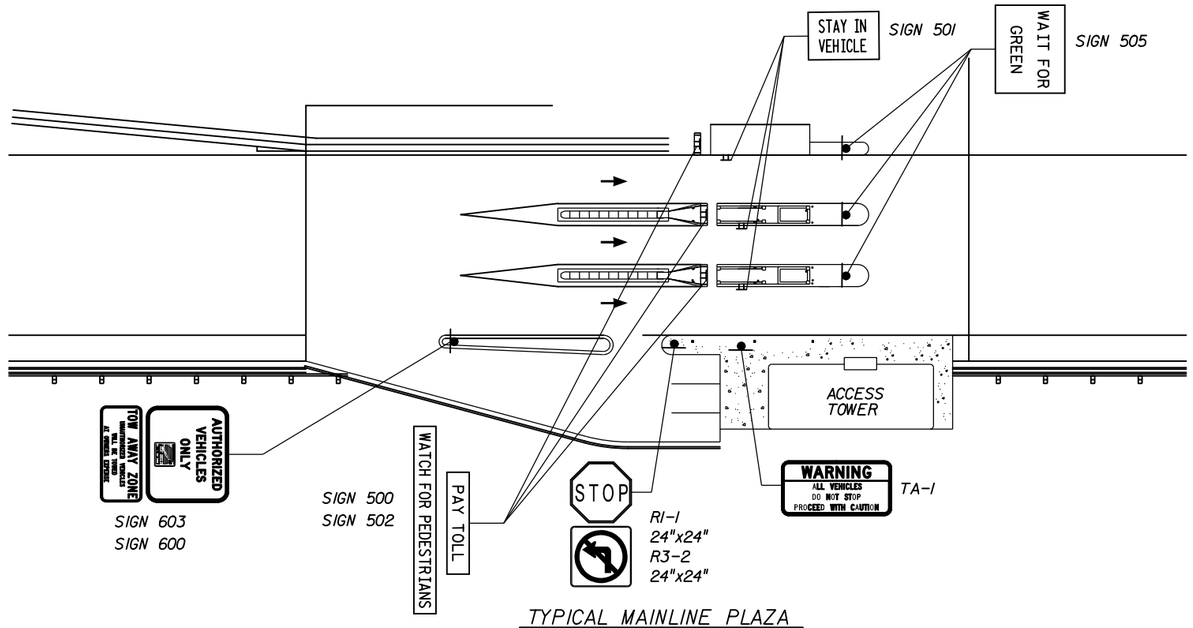

TYPICAL MAINLINE PLAZA
N.T.S.

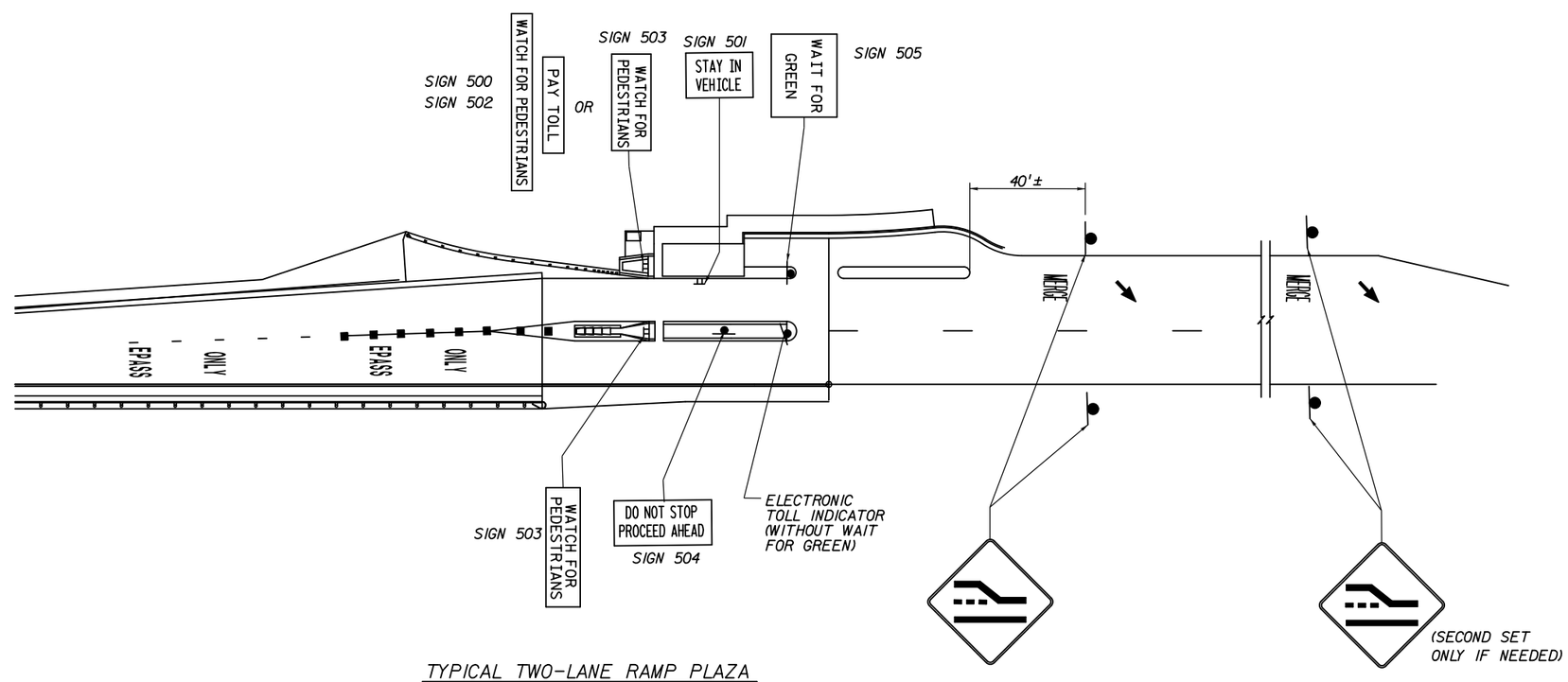

TYPICAL TWO-LANE RAMP PLAZA
WITH DEDICATED E-PASS LANE
N.T.S.

NOTES TO CONSULTANT:

1. PLAZAS SHOWN ARE FOR INFORMATIONAL PURPOSES ONLY. CONSULTANT SHALL REVISE AS NECESSARY FOR SPECIFIC PROJECT.
2. DELETE THIS BOX WITH NOTES PRIOR TO INCLUDING SHEET IN PLANS.

REVISIONS					
DATE	BY	DESCRIPTION	DATE	BY	DESCRIPTION

CENTRAL FLORIDA EXPRESSWAY AUTHORITY

INTERIOR PLAZA SIGNING
MAINLINE AND RAMP

PROJECT	SHEET NO.
STANDARDS	42

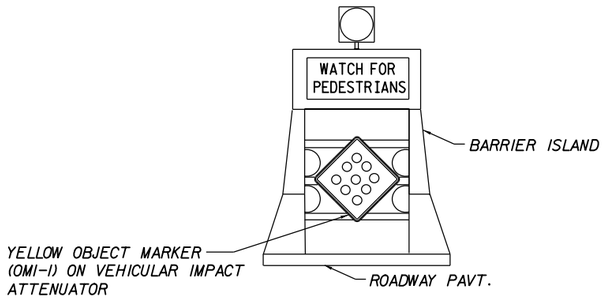

SIGNING FOR 3' RAMP ISLAND GATORHEAD
AND IMPACT ATTENUATOR
N.T.S.

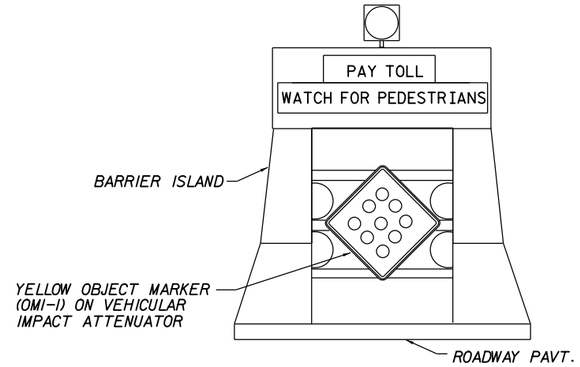

SIGNING FOR 6' (MIN.) MAINLINE ISLAND GATORHEAD
AND IMPACT ATTENUATOR
N.T.S.

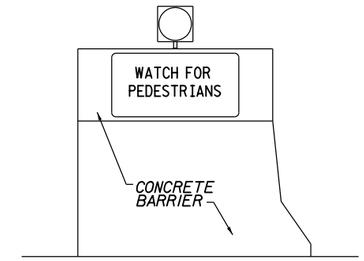

SIGNING FOR 4'-7" (+/-)
RAMP ISLAND GATORHEAD
N.T.S.

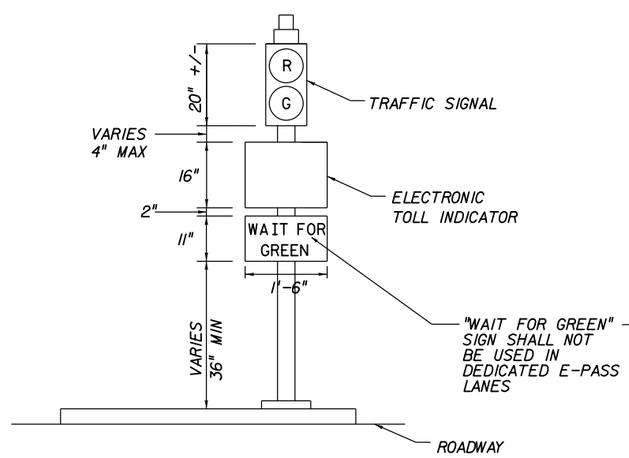

TOLL SIGNAL DETAIL
N.T.S.

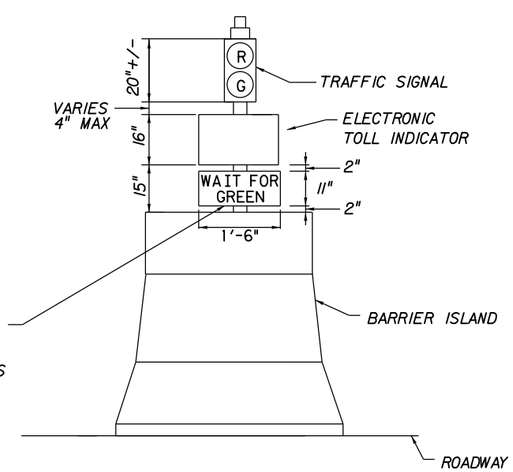

TOLL SIGNAL DETAIL
N.T.S.

USER: STOD3416 10/23/2014 11:18:42 AM T:\Cadd\CFXway Standards 2014\A2-04.dgn

REVISIONS					
DATE	BY	DESCRIPTION	DATE	BY	DESCRIPTION

CENTRAL
FLORIDA
EXPRESSWAY
AUTHORITY

INTERIOR PLAZA SIGNING
MAINLINE AND RAMP

PROJECT	SHEET NO.
STANDARDS	43

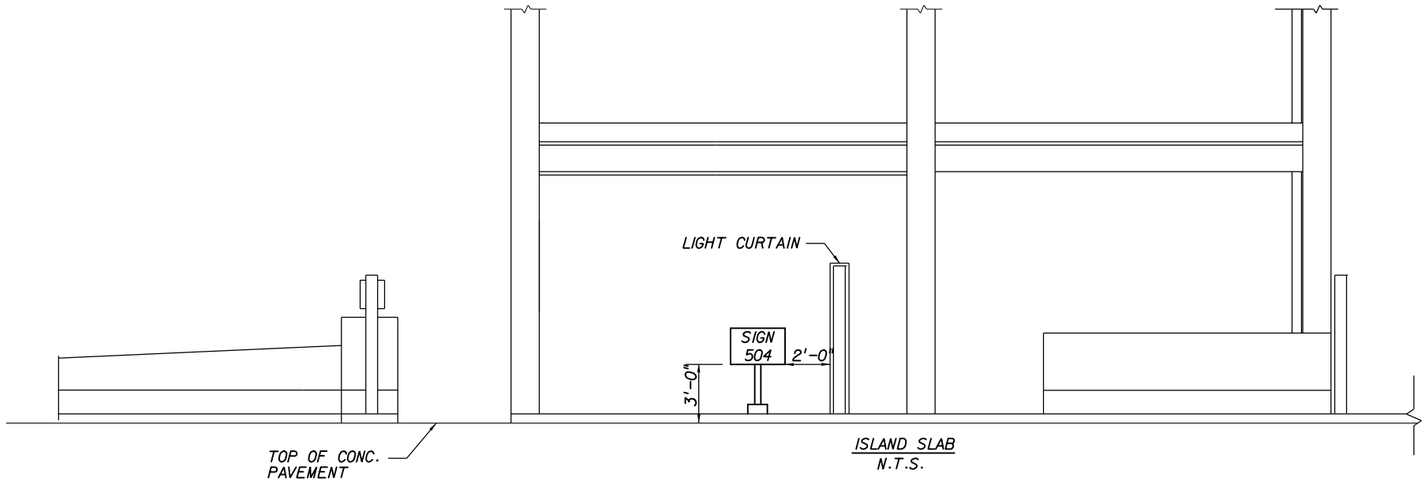

ISLAND SLAB
N.T.S.

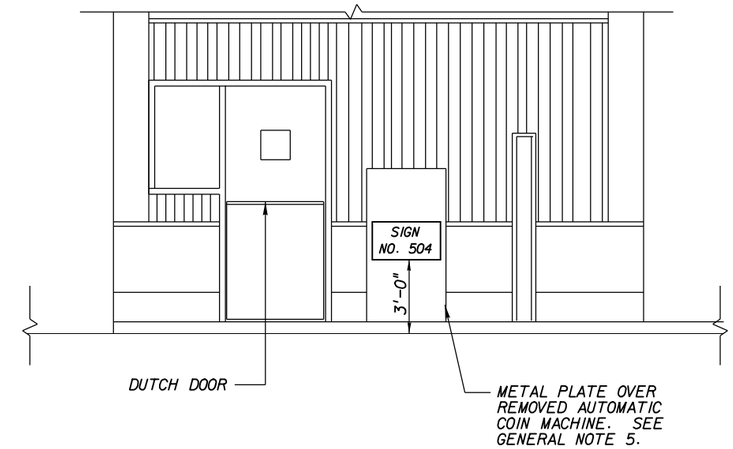

RAMP BOOTH CONVERTED TO E-PASS ONLY
N.T.S.

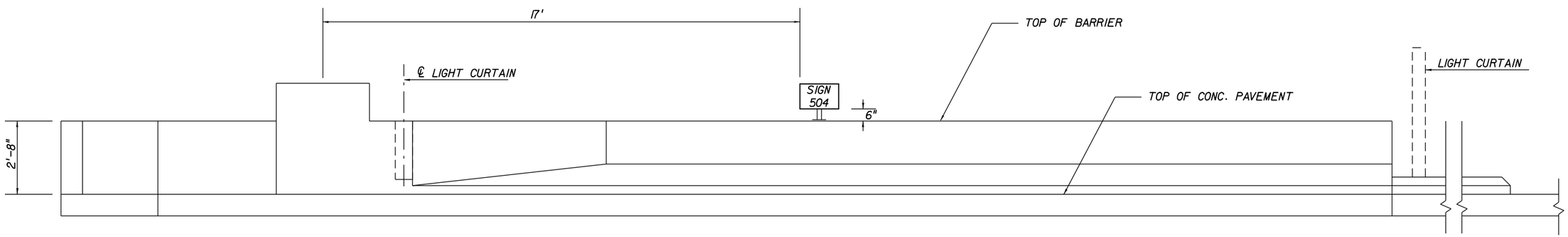

BARRIER ISLAND
N.T.S.

SIGN 504 CONNECTIONS TO CONCRETE TOLL ISLANDS

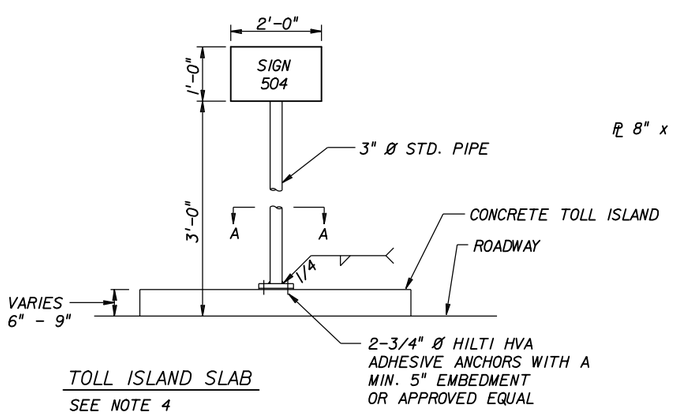

TOLL ISLAND SLAB
SEE NOTE 4

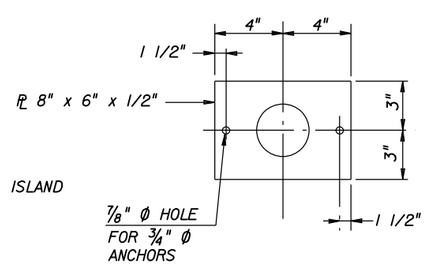

SECTION A-A

CONNECTION NOTES:

1. SIGN STRUCTURE MATERIALS SHALL BE AS FOLLOWS:
   - PIPE - ASTM-A53 GRADE B
   - PLATE - ASTM-A36
   - BOLTS - ASTM-A307
2. ALL STEEL ITEMS SHALL BE GALVANIZED AS FOLLOWS:
   - PLATE & PIPE - ASTM-A123
   - BOLTS, NUTS, & WASHERS - ASTM-A153 CLASS C OR D
3. SIGN PANELS SHALL BE ATTACHED TO PIPE ACCORDING TO FDOT ROADWAY AND TRAFFIC DESIGN STANDARDS INDEX NO. 11860.

GENERAL NOTES:

1. SIGN 504 TO BE MOUNTED IN DEDICATED E-PASS LANE ONLY.
2. SIGN 504 TO BE MOUNTED ON A SINGLE POST ATTACHED TO TOP OF ISLAND SLAB OR BARRIER.
3. HORIZONTAL CLEARANCE SHALL BE 1'-6" FROM FACE OF CURB OR CURB LINE TO FACE OF SIGN.
4. HARDWARE SPECIFIED IN THE CONNECTION NOTES SHALL APPLY WHEN THE ASSEMBLY IS INSTALLED ON EITHER AN ISLAND SLAB OR BARRIER ISLAND.
5. SIGN SHALL BE HORIZONTALLY CENTERED WITHIN METAL PLATE.

DO NOT STOP
PROCEED AHEAD

SIGN 504

REVISIONS					
DATE	BY	DESCRIPTION	DATE	BY	DESCRIPTION

CENTRAL FLORIDA EXPRESSWAY AUTHORITY

INTERIOR PLAZA SIGNING
MAINLINE AND RAMP

PROJECT	SHEET NO.
STANDARDS	44

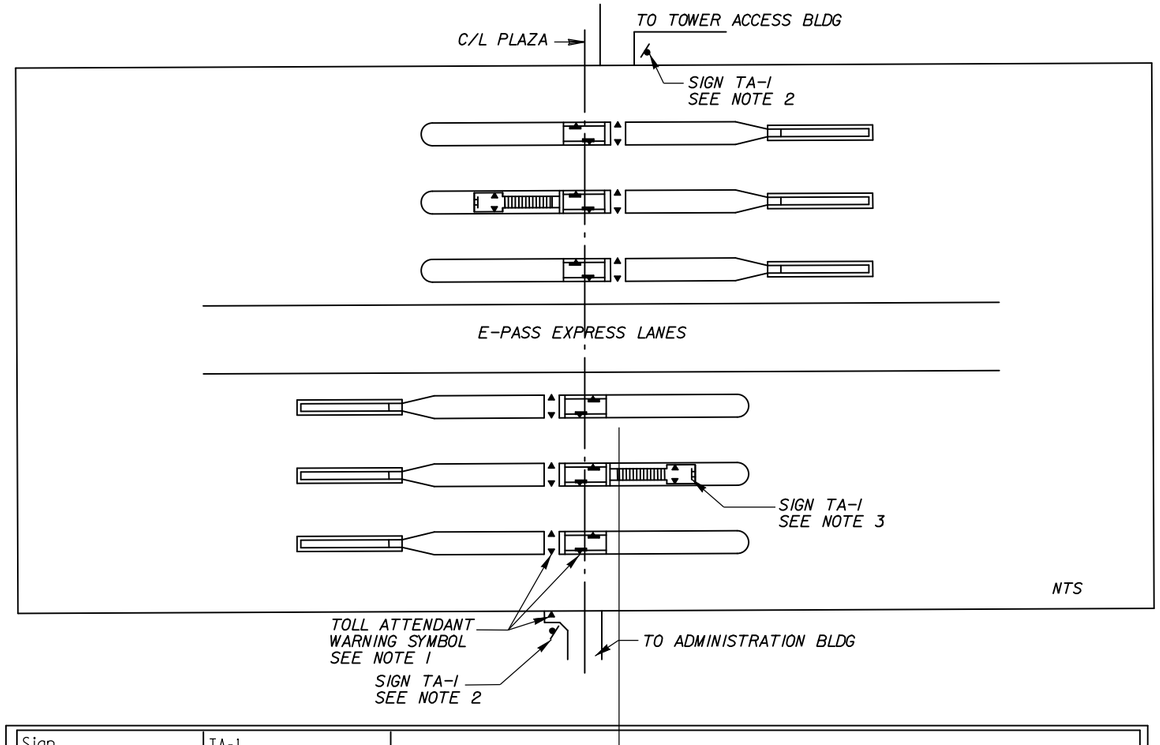

Sign	TA-1
Quantity	
Width	3'-0"
Height	1'-6"
Border Width	0.5"
Border Radii	2"
Border Inset	
Background Color	Red/White
Legend/Border Color	White/Black
Sheeting	DG3
Arrow Size (Angle)	
Station/Structure	

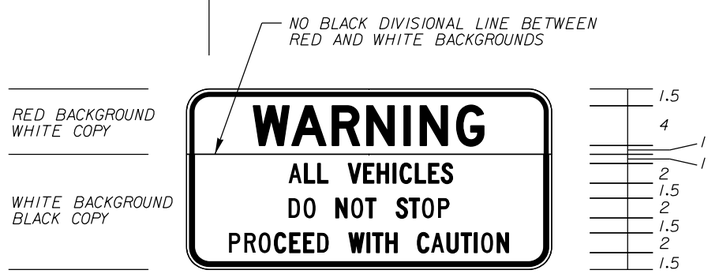

Copy Spacing / Length Size/Series

	W	A	R	N	I	N	G															22.8	4D
6.6	22.8							6.6															
	A	L	L		V	E	H	I	C	L	E	S										17.1	2C
9.4	3.9			3	10.2								9.5										
	D	O		N	O	T		S	T	O	P											18	2C
9	2.7		3.0	4			3	5.3				9											
	P	R	O	C	E	E	D		W	I	T	H		C	A	U	T	I	O	N		29.6	2C
3.2	9.8							3	4.8				3	9							3.2		

GENERAL NOTES:

1. TOLL ATTENDANT WARNING PAVEMENT SYMBOLS SHALL BE FURNISHED AND INSTALLED BY THE CONTRACTOR. SYMBOLS SHALL BE PLACED ON THE ISLANDS AND SHALL NOT BE PLACED WITHIN TRAVEL LANES. ACTUAL LOCATION WITHIN TOLL BOOTH DOOR AREAS SHALL BE AS DIRECTED BY THE ENGINEER. ADDITIONAL SYMBOLS SHALL BE INSTALLED IN ACCORDANCE WITH THE MANUFACTURER'S RECOMMENDATIONS. SIZE OF SYMBOL AT TOLL BOOTH DOOR AREAS SHALL BE 8" X 8" X 8". THE 14" X 14" X 14" SYMBOL SHALL BE USED ELSEWHERE.
2. POST MOUNTED WARNING SIGN (SIGN TA-1) ASSEMBLY SHALL BE FIELD LOCATED BY THE ENGINEER AND FURNISHED AND INSTALLED BY THE CONTRACTOR.
3. ATTENDANT WARNING SIGNS (SIGN TA-1) SHALL BE FURNISHED AND INSTALLED (ANCHOR BOLTED) BY THE CONTRACTOR ON THE ISLAND BARRIER WALL FACING EACH STAIRWELL WHEN PRESENT. PLACEMENT SHALL PROVIDE OPTIMUM VISIBILITY.

NOTES TO CONSULTANT:

1. SIGN TA-1 AND TOLL ATTENDANT WARNING SYMBOLS ARE TO BE INCLUDED IN THE TOLL PLAZA PLANS UNLESS THE AUTHORITY DIRECTS OTHERWISE. PAYMENT IS TO BE INCLUDED IN THE LUMP SUM FOR THE TOLL PLAZA.
2. QUANTITIES TABLE MAY BE INCLUDED FOR BID PURPOSES ONLY.
3. PROVIDE PROJECT SPECIFIC CROSS REFERENCES IN DETAILS BELOW.
4. VERIFY WALKWAY PATH WITH AUTHORITY OPERATIONS AND REVISE DETAIL ACCORDINGLY.
5. DELETE THIS BOX WITH NOTES PRIOR TO INCLUDING SHEET IN PLANS.

TOLL ATTENDANT SIGNING & SYMBOL QUANTITIES

PAY ITEM NO.	DESCRIPTION	UNIT	PLAZA	PLAZA	TOTAL
	SIGN SINGLE POST (LESS THAN 12) (SIGN TA-1)	AS			
	SIGN PANEL (15 OR LESS) (SIGN TA-1) (BARRIER MOUNT)	EA			
	FURNISH AND INSTALL PAVEMENT SYMBOL (8")	EA			
	FURNISH AND INSTALL PAVEMENT SYMBOL (14")	EA			

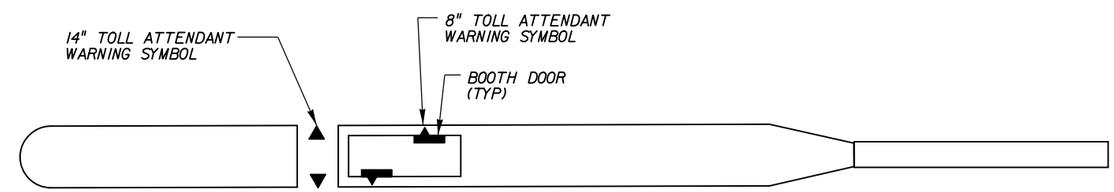

TYPICAL ISLAND LOCATIONS FOR TOLL ATTENDANT WARNING SYMBOLS

SEE GENERAL NOTE X, SHEET S-XX
NTS

FOR INFORMATION ONLY

TYPICAL TOLL ATTENDANT WARNING SYMBOL

SEE GENERAL NOTE X, SHEET S-XX
NTS

REVISIONS					
DATE	BY	DESCRIPTION	DATE	BY	DESCRIPTION

CENTRAL FLORIDA EXPRESSWAY AUTHORITY

TOLL ATTENDANT SIGNING AND PAVEMENT WARNING SYMBOL

PROJECT	SHEET NO.
STANDARDS	45

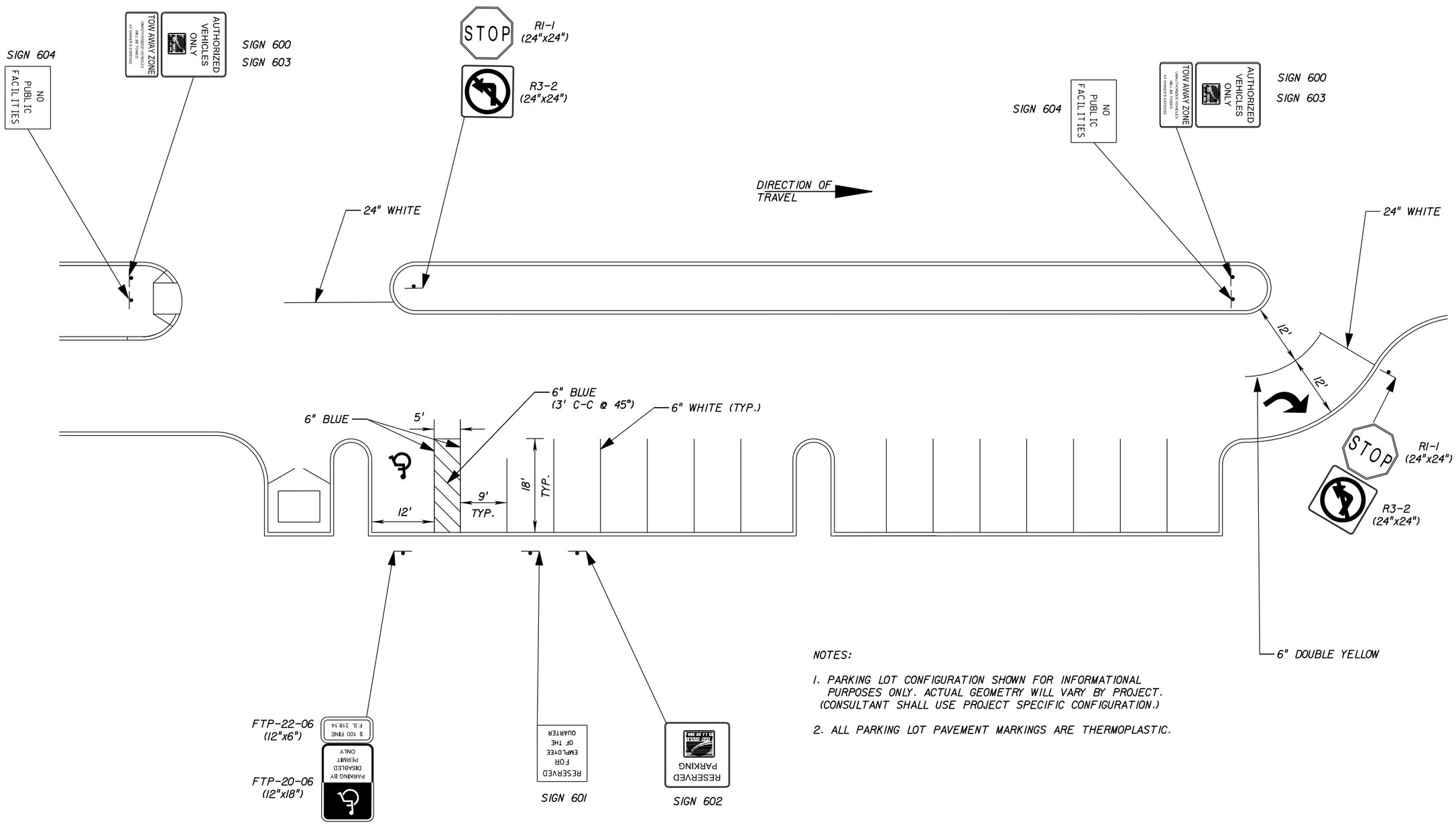

NOTES:

1. PARKING LOT CONFIGURATION SHOWN FOR INFORMATIONAL PURPOSES ONLY. ACTUAL GEOMETRY WILL VARY BY PROJECT. (CONSULTANT SHALL USE PROJECT SPECIFIC CONFIGURATION.)

2. ALL PARKING LOT PAVEMENT MARKINGS ARE THERMOPLASTIC.

N.T.S.

REVISIONS					
DATE	BY	DESCRIPTION	DATE	BY	DESCRIPTION

CENTRAL FLORIDA EXPRESSWAY AUTHORITY

MAINLINE PLAZA PARKING LOT SIGNING AND MARKING

PROJECT	SHEET NO.
STANDARDS	46

USER: STOD3416 10/23/2014 11:18:44 AM T:\Cadd\CFXway Standards 2014\A6-01.dgn

NOTES TO CONSULTANT:

1. FILL IN CORRECT CROSS REFERENCE FOR LOGO EP-5.
2. DELETE THIS BOX WITH NOTES PRIOR TO INCLUDING IN PLANS.

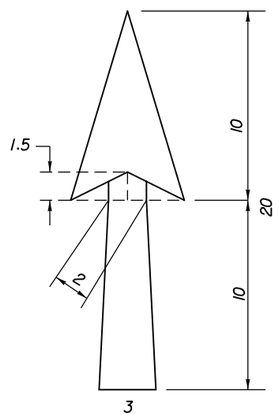

DETAIL A

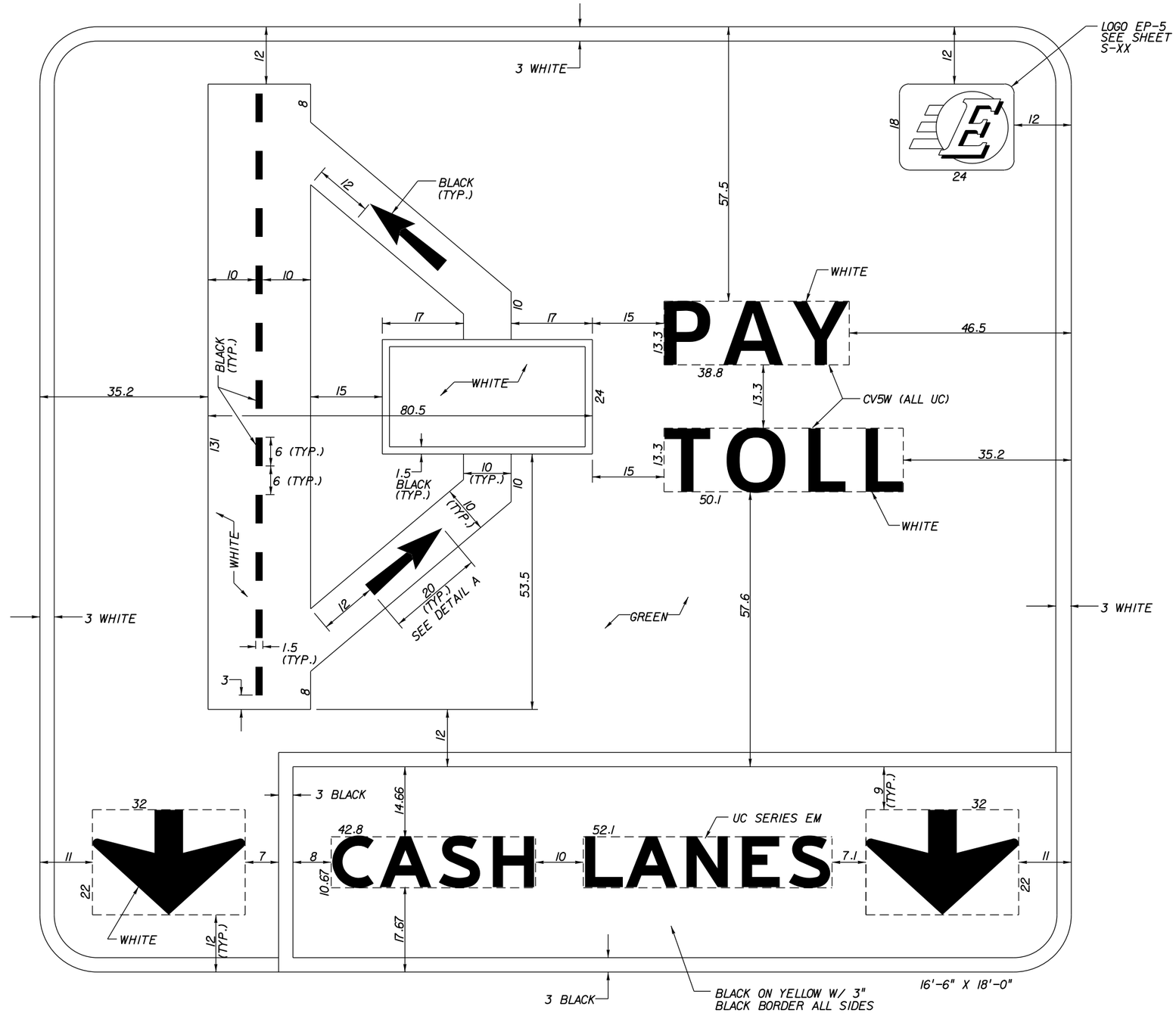

NOTES:

1. SIGN FACE SHALL HAVE A PRISMATIC RETROREFLECTIVE SHEETING, 3M COMPANY DIAMOND GRADE CUBED (DG3) OR AUTHORITY APPROVED EQUAL.
2. SPACING BETWEEN BLACK LETTERS ON YELLOW BACKGROUND HAS BEEN INCREASED 10% FOR IMPROVED LEGIBILITY.

3 CORNER RADII: 12".

4. ALL DIMENSIONS ARE IN INCHES UNLESS OTHERWISE NOTED.

QUANTITY REQ'D _

MAINLINE
TOLL PLAZA
APPROACH SIGNING

REVISIONS					
DATE	BY	DESCRIPTION	DATE	BY	DESCRIPTION

CENTRAL FLORIDA EXPRESSWAY AUTHORITY

GUIDE SIGN WORKSHEET
SIGN 100

PROJECT	SHEET NO.
STANDARDS	47

NOTES TO CONSULTANT:

1. FILL IN CORRECT CROSS REFERENCE FOR LOGO EP-5.
2. DELETE THIS BOX WITH NOTES PRIOR TO INCLUDING IN PLANS.

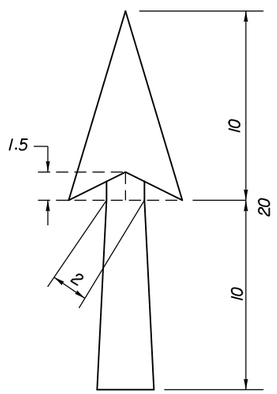

DETAIL A

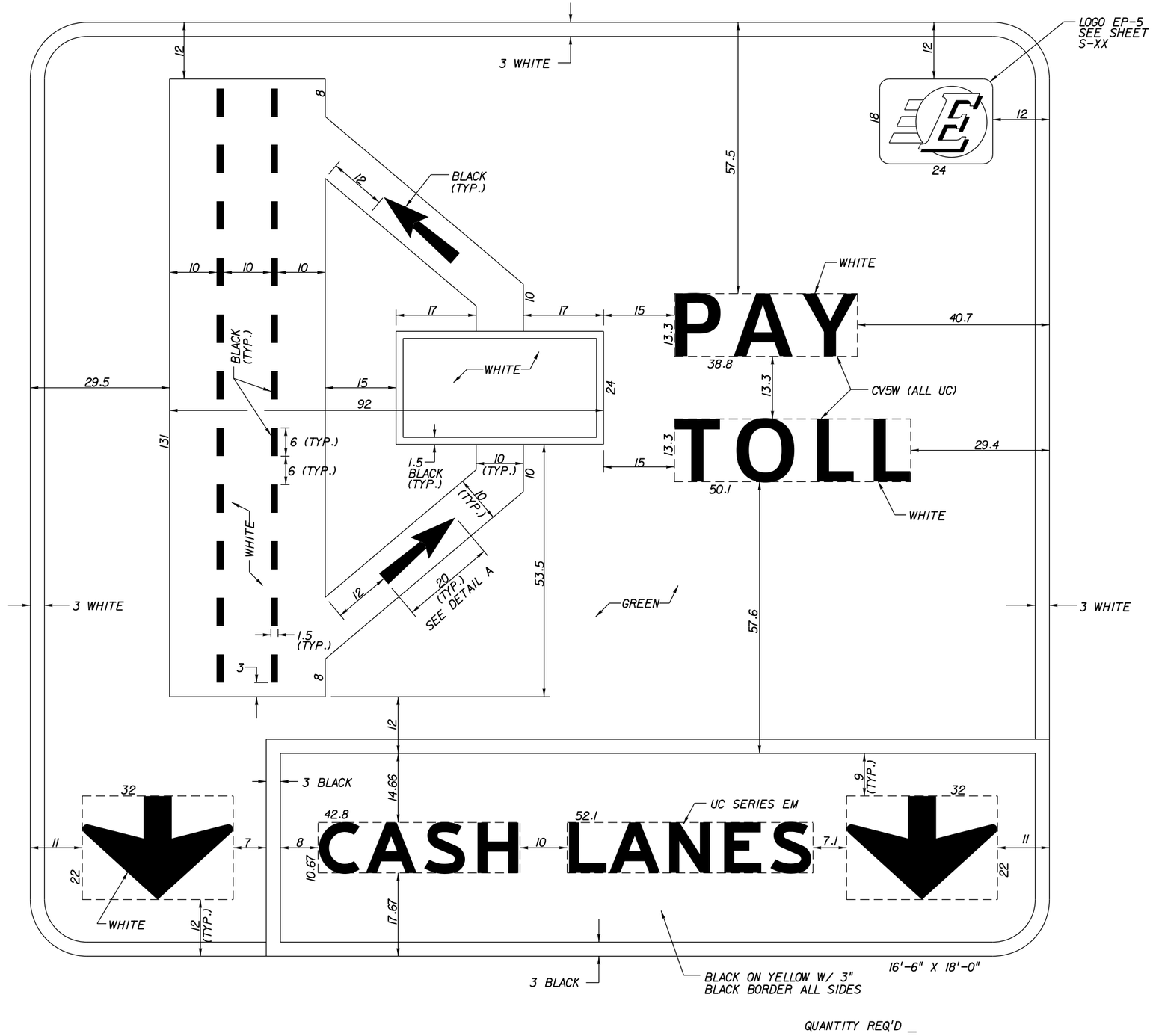

NOTES:

1. SIGN FACE SHALL HAVE A PRISMATIC RETROREFLECTIVE SHEETING, 3M COMPANY DIAMOND GRADE CUBED (DG3) OR AUTHORITY APPROVED EQUAL.
2. SPACING BETWEEN BLACK LETTERS ON YELLOW BACKGROUND HAS BEEN INCREASED 10% FOR IMPROVED LEGIBILITY.
3. CORNER RADII: 12"
4. ALL DIMENSIONS ARE IN INCHES UNLESS OTHERWISE NOTED.

QUANTITY REQ'D _

MAINLINE
TOLL PLAZA
APPROACH SIGNING

REVISIONS					
DATE	BY	DESCRIPTION	DATE	BY	DESCRIPTION

CENTRAL FLORIDA EXPRESSWAY AUTHORITY

GUIDE SIGN WORKSHEET
SIGN 102

PROJECT	SHEET NO.
STANDARDS	48

NOTES TO CONSULTANT:

1. FILL IN CORRECT CROSS REFERENCE FOR LOGO EP-5.
2. DELETE THIS BOX WITH NOTES PRIOR TO INCLUDING IN PLANS.

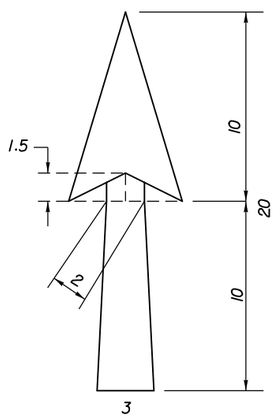

DETAIL A

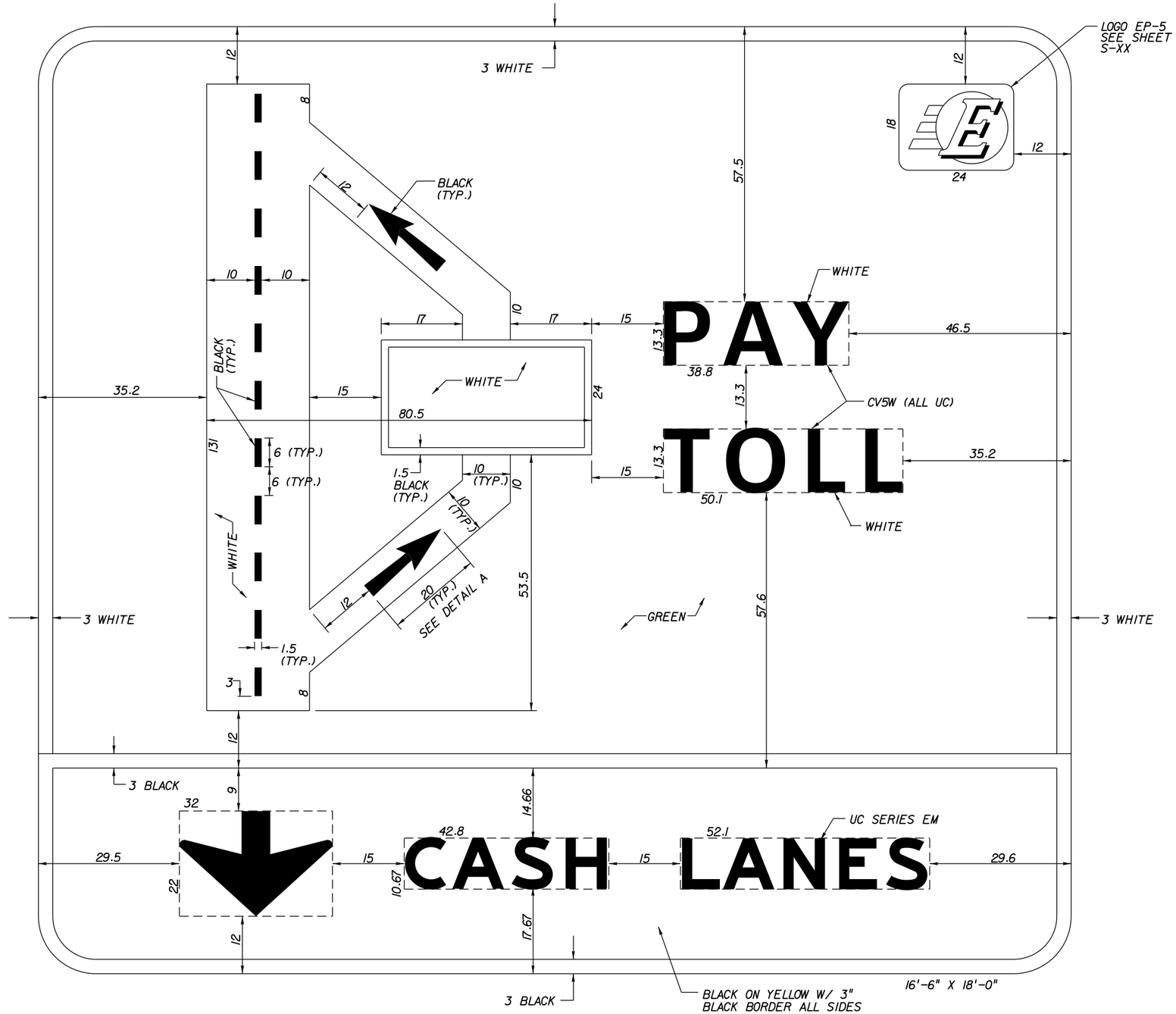

NOTES:

1. SIGN FACE SHALL HAVE A PRISMATIC RETROREFLECTIVE SHEETING, 3M COMPANY DIAMOND GRADE CUBED (DG3) OR AUTHORITY APPROVED EQUAL.
2. SPACING BETWEEN BLACK LETTERS ON YELLOW BACKGROUND HAS BEEN INCREASED 10% FOR IMPROVED LEGIBILITY.
3. CORNER RADII: 12"
4. ALL DIMENSIONS ARE IN INCHES UNLESS OTHERWISE NOTED.

QUANTITY REQ'D _

MAINLINE
TOLL PLAZA
APPROACH SIGNING

REVISIONS					
DATE	BY	DESCRIPTION	DATE	BY	DESCRIPTION

CENTRAL FLORIDA EXPRESSWAY AUTHORITY

GUIDE SIGN WORKSHEET
SIGN 103

PROJECT	SHEET NO.
STANDARDS	49

NOTES TO CONSULTANT:

1. FILL IN CORRECT CROSS REFERENCE FOR LOGO EP-5.
2. DELETE THIS BOX WITH NOTES PRIOR TO INCLUDING IN PLANS.

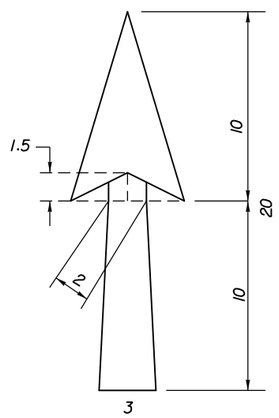

DETAIL A

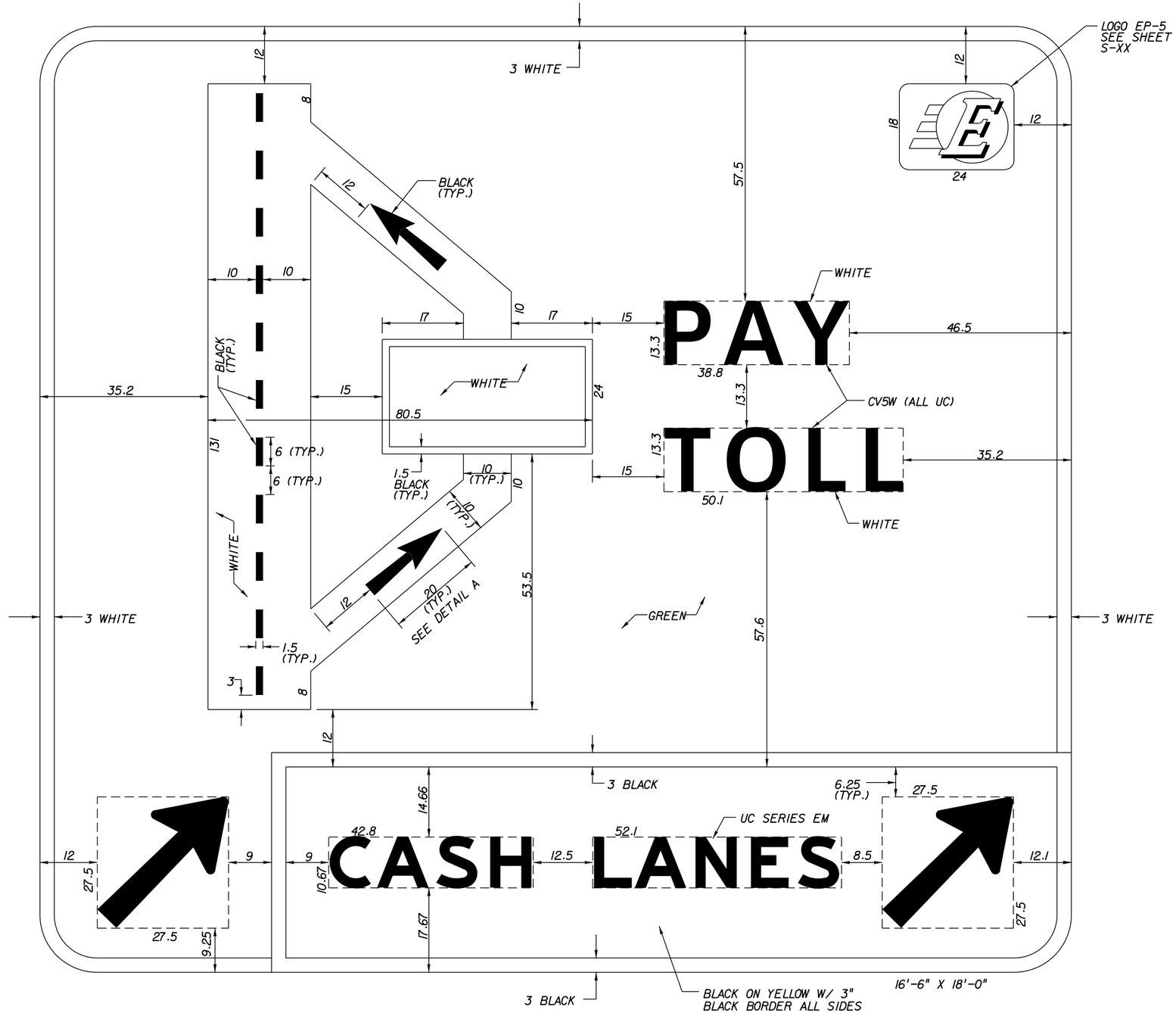

NOTES:

1. SIGN FACE SHALL HAVE A PRISMATIC RETROREFLECTIVE SHEETING, 3M COMPANY DIAMOND GRADE CUBED (DG3) OR AUTHORITY APPROVED EQUAL.
2. SPACING BETWEEN BLACK LETTERS ON YELLOW BACKGROUND HAS BEEN INCREASED 10% FOR IMPROVED LEGIBILITY.
3. STANDARD GUIDE SIGN ARROW: 35" x 22.25" (45°)

4 CORNER RADII: 12"

5. ALL DIMENSIONS ARE IN INCHES UNLESS OTHERWISE NOTED.

QUANTITY REQ'D _

MAINLINE
TOLL PLAZA
APPROACH SIGNING

REVISIONS					
DATE	BY	DESCRIPTION	DATE	BY	DESCRIPTION

CENTRAL FLORIDA EXPRESSWAY AUTHORITY

GUIDE SIGN WORKSHEET
SIGN 104

PROJECT	SHEET NO.
STANDARDS	50

NOTES TO CONSULTANT:

1. FILL IN CORRECT CROSS REFERENCE FOR LOGO EP-5.
2. DELETE THIS BOX WITH NOTES PRIOR TO INCLUDING IN PLANS.

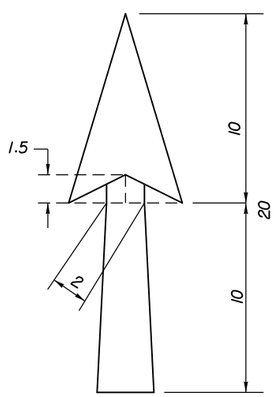

DETAIL A

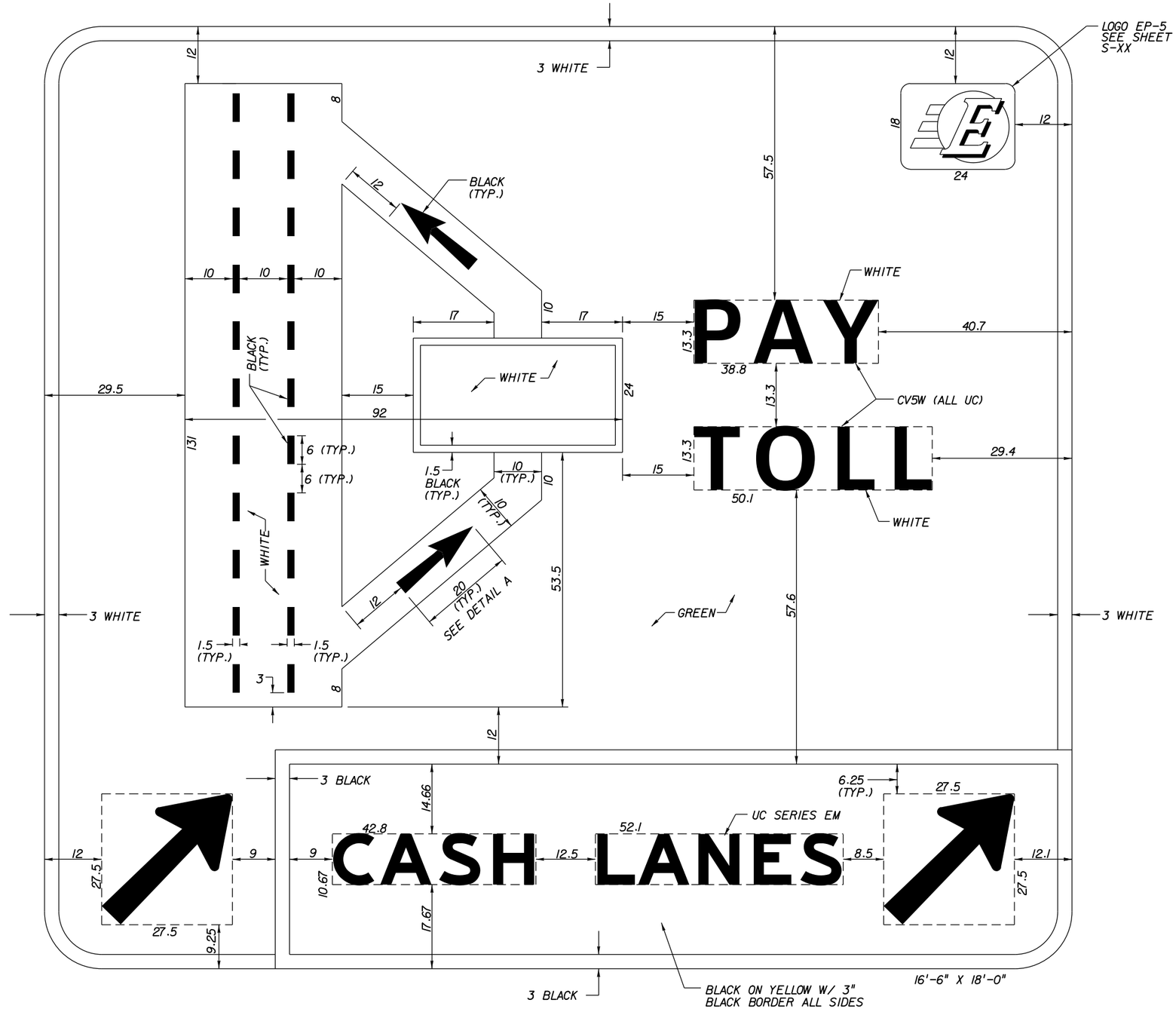

NOTES:

1. SIGN FACE SHALL HAVE A PRISMATIC RETROREFLECTIVE SHEETING, 3M COMPANY DIAMOND GRADE CUBED (DG3) OR AUTHORITY APPROVED EQUAL.
2. SPACING BETWEEN BLACK LETTERS ON YELLOW BACKGROUND HAS BEEN INCREASED 10% FOR IMPROVED LEGIBILITY.
3. STANDARD GUIDE SIGN ARROW: 35" x 22.25" (45°)
4. CORNER RADII: 12"
5. ALL DIMENSIONS ARE IN INCHES UNLESS OTHERWISE NOTED.

QUANTITY REQ'D _

MAINLINE
TOLL PLAZA
APPROACH SIGNING

REVISIONS					
DATE	BY	DESCRIPTION	DATE	BY	DESCRIPTION

CENTRAL FLORIDA EXPRESSWAY AUTHORITY

GUIDE SIGN WORKSHEET
SIGN 105

PROJECT	SHEET NO.
STANDARDS	51

NOTES TO CONSULTANT:

1. FILL IN CORRECT CROSS REFERENCE FOR LOGO EP-5.
2. DELETE THIS BOX WITH NOTES PRIOR TO INCLUDING IN PLANS.

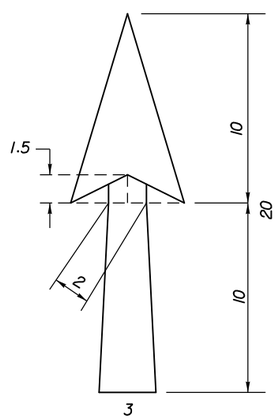

DETAIL A

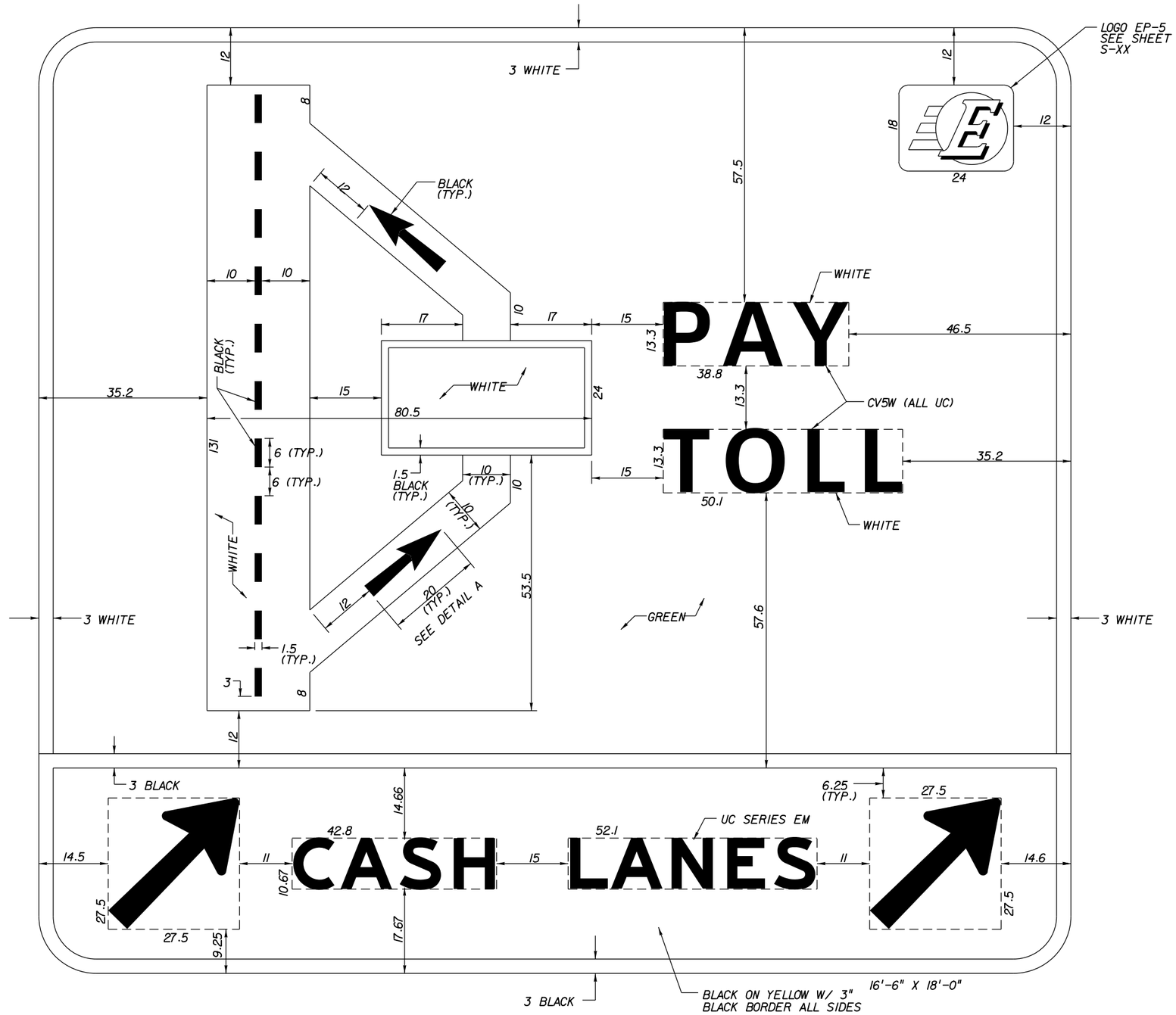

NOTES:

1. SIGN FACE SHALL HAVE A PRISMATIC RETROREFLECTIVE SHEETING, 3M COMPANY DIAMOND GRADE CUBED (DG3) OR AUTHORITY APPROVED EQUAL.
2. SPACING BETWEEN BLACK LETTERS ON YELLOW BACKGROUND HAS BEEN INCREASED 10% FOR IMPROVED LEGIBILITY.
3. STANDARD GUIDE SIGN ARROW: 35" x 22.25" (45°)
4. CORNER RADII: 12"
5. ALL DIMENSIONS ARE IN INCHES UNLESS OTHERWISE NOTED.

QUANTITY REQ'D _

MAINLINE
TOLL PLAZA
APPROACH SIGNING

REVISIONS					
DATE	BY	DESCRIPTION	DATE	BY	DESCRIPTION

CENTRAL FLORIDA EXPRESSWAY AUTHORITY

GUIDE SIGN WORKSHEET
SIGN 106

PROJECT	SHEET NO.
STANDARDS	52

Sign	107
Quantity	
Width	16'-6"
Height	15'-6"
Border Width	3"
Border Radii	12"
Border Inset	
Background Color	Green/Yellow/White
Legend/Border Color	Black/White
Sheeting	DG3
Arrow Size (Angle)	
Station/Structure	

1. HORIZONTAL SPACING BETWEEN BLACK LETTERS ON YELLOW BACKGROUND HAS BEEN INCREASED BY 10%.

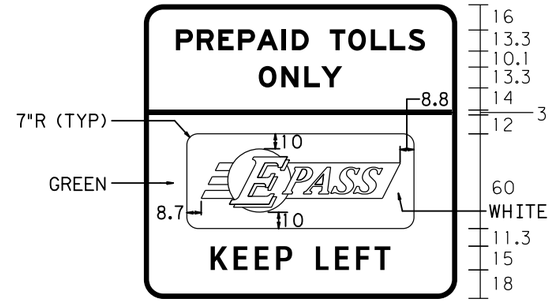

EPASS LOGO EP-1
SEE SHEET S-XX

Copy Spacing

																						Length	Size/Series
	P	R	E	P	A	I	D		T	O	L	L	S									167	13.3 EM
15.5	85.7							20	61.3					15.5									
	O	N	L	Y																		53.7	13.3 EM
72.2	53.7				72.1																		
																						144	
27	144	27																					
	K	E	E	P		L	E	F	T													118.1	15 CV4W
40	51.9				18.8	47.4				39.9													

Sign	108
Quantity	
Width	18'-0" (STATIC & DMS)
Height	16'-6" (STATIC + DMS)
Border Width	3"
Border Radii	12" Top of static panel only
Border Inset	
Background Color	White/Green/Yellow
Legend/Border Color	Black/White
Sheeting	DG3

1. THE TOTAL HEIGHT (16'-6") SHALL INCLUDE THE STATIC PANEL, THE DMS AND THE GAP.
2. A .125 ALUMINUM SHEET WITH 3M MATTE BLACK SHEETING MATERIAL SHALL BE ATTACHED TO THE BOTTOM OF THE STATIC PANEL AND RUN CONTINUOUS ACROSS THE PANEL WIDTH. SHEET SHALL BE ATTACHED TO THE BACK OF THE STATIC SIGN SUCH THAT THE GAP IS NOT VISIBLE. CONTRACTOR SHALL SUBMIT PROPOSED SHEET SIZE, 3M SHEETING MATERIAL AND ATTACHMENT METHOD FOR ENGINEER'S REVIEW PRIOR TO FABRICATION.
3. HORIZONTAL SPACING BETWEEN BLACK LETTERS ON YELLOW BACKGROUND HAS BEEN INCREASED BY 10%.

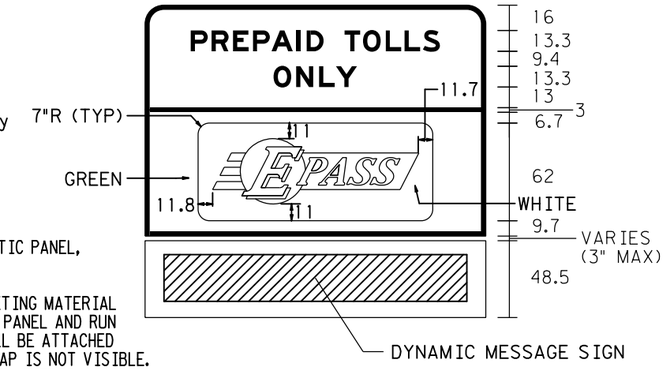

EPASS LOGO EP-1
SEE SHEET S-XX

CONSULTANT WILL BE GIVEN PREVIOUS DMS SHOP DRAWINGS FOR USE AS EXAMPLE(S)

Copy Spacing

																						Length	Size/Series
	P	R	E	P	A	I	D		T	O	L	L	S									167	13.3 EM
24.5	85.7							20	61.3					24.5									
	O	N	L	Y																		53.7	13.3 EM
81.2	53.7				81.1																		
																						150	
33	150	33																					

Sign	109
Quantity	
Width	15'-6"
Height	15'-6"
Border Width	3"
Border Radii	12"
Border Inset	
Background Color	Yellow
Legend/Border Color	Black
Sheeting	DG3
Arrow Size (Angle)	
Station/Structure	

1. LENGTH OF HYPHEN SHALL BE 9.0" MINIMUM.
2. HORIZONTAL SPACING BETWEEN BLACK LETTERS ON YELLOW BACKGROUND HAS BEEN INCREASED BY 10%.

CONSULTANT TO REVISE MILEAGE AND TOLL RATE AS NEEDED

Copy Spacing

																						Length	Size/Series
	T	O	L	L		P	L	A	Z	A												150.6	15 EM
17.7	54.8				22.5	73.3					17.7												
	1		M	I	L	E																79	18/15 EM
53.5	5.4	22.5	51.1				53.5																
	C	A	R	S		-		2		A	X	L	E									145	12 EM
20.5	47.6				7	9	7	9.7	18	46.7				20.5									
	C	A	S	H		$	1	.	0	0												112	12 EM
37	48.2				18	45.8					37												

Sign	110
Quantity	
Width	16'-0"
Height	6'-6"
Border Width	2"
Border Radii	10"
Border Inset	
Background Color	Yellow
Legend/Border Color	Black
Sheeting	DG3
Arrow Size (Angle)	
Station/Structure	

1. LETTER SPACING HAS BEEN INCREASED BY 10%.

Copy Spacing

																						Length	Size/Series
	S	T	O	P		A	H	E	A	D												157.4	15 EM
17.3	56.8				22.5	78.1					17.3												
	P	A	Y		T	O	L	L														122.4	15 EM
34.8	45.1				22.5	54.8				34.8													

MAINLINE TOLL PLAZA APPROACH SIGNING

NOTES: WIDTH - HORIZONTAL SPACING DIMENSIONS ARE IN INCHES. END DIMENSIONS INCLUDE BORDER WIDTH, MARGIN AND BORDER RECESS.

REVISIONS

DATE	BY	DESCRIPTION	DATE	BY	DESCRIPTION

CENTRAL FLORIDA EXPRESSWAY AUTHORITY

GUIDE SIGN WORKSHEET SIGNS 107, 108, 109, 110

PROJECT: STANDARDS

SHEET NO. 53

Sign	111
Quantity	
Width	12'-0"
Height	7'-6"
Border Width	1.75"
Border Radii	11"
Border Inset	0.25
Background Color	White
Legend/Border Color	Black
Sheeting	DG3
Arrow Size (Angle)	
Station/Structure	

1. NUMERAL SPACING TO BE ADJUSTED SUCH THAT PERIODS AND COLUMNS OF NUMERALS LINE UP VERTICALLY.
2. SPACE BETWEEN "AXLE" AND TOLL RATE SUBJECT TO CHANGE BASED ON NUMERAL SPACING ADJUSTMENTS PER NOTE 1.
3. CENTERLINES ARE FOR INFORMATIONAL PURPOSES ONLY.

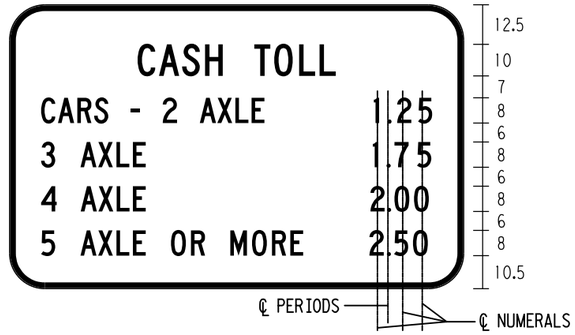

Copy Spacing																						Length	Size/Series
	C	A	S	H		T	O	L	L													62.8	10 C
40.6		27			10		25.8			40.6													
	C	A	R	S		-		2		A	X	L	E		1	.	2	5				124	8 C
10		21.6			5	6	5	4.5	8		20.7			34.7		18.5			10				
	3		A	X	L	E		1	.	7	5											124	8 C
10	4.5	8		20.7			72.3		18.5			10											
	4		A	X	L	E		2	.	0	0											124	8 C
10	5	7.5		20.7			72.3		18.5			10											
	5		A	X	L	E		0	R		M	0	R	E		2	.	5	0			124	8 C
10	4.5	8		20.7			8	10.8		8		23.1			22.4		18.5			10			

Sign	112
Quantity	
Width	4'-0"
Height	4'-6"
Border Width	1"
Border Radii	6"
Border Inset	0.5"
Background Color	White
Legend/Border Color	Black
Sheeting	DG3
Arrow Size (Angle)	
Station/Structure	

1. SPACING BETWEEN LETTERS HAS BEEN INCREASED BY 10%.

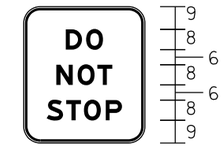

Copy Spacing																						Length	Size/Series
	D	O																				15	8 EM
16.5	15		16.5																				
	N	O	T																			22.5	8 EM
12.8	22.5			12.7																			
	S	T	O	P																		30.3	8 EM
8.9	30.3				8.8																		

Sign	113
Quantity	
Width	3'-0"
Height	4'-0"
Border Width	0.75"
Border Radii	4"
Border Inset	0.25"
Background Color	White
Legend/Border Color	Black
Sheeting	DG3
Arrow Size (Angle)	
Station/Structure	

1. SPACING BETWEEN LETTERS HAS BEEN INCREASED BY 10%.

Copy Spacing																						Length	Size/Series
	D	O																				13.1	7 EM
11.5	13.1		11.4																				
	N	O	T																			19.7	7 EM
8.2	19.7			8.1																			
	S	T	O	P																		26.5	7 EM
4.8	26.5				4.7																		

Sign	114
Quantity	
Width	3'-0"
Height	4'-0"
Border Width	0.75"
Border Radii	3"
Border Inset	0.25"
Background Color	Yellow
Legend/Border Color	Black
Sheeting	DG3
Arrow Size (Angle)	
Station/Structure	

1. LETTER SPACING HAS BEEN INCREASED BY 10%.

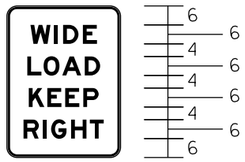

USE ON MAINLINE & RAMPS

Copy Spacing																						Length	Size/Series
	W	I	D	E																		21.5	6 EM
7.2	21.5				7.3																		
	L	O	A	D																		23.3	6 EM
6.4	23.3				6.3																		
	K	E	E	P																		22.5	6 EM
6.8	22.5				6.7																		
	R	I	G	H	T																	26	6 EM
5	26					5																	

MAINLINE & RAMP TOLL PLAZA AND GANTRY APPROACH SIGNING

NOTES: WIDTH - HORIZONTAL SPACING DIMENSIONS ARE IN INCHES. END DIMENSIONS INCLUDE BORDER WIDTH, MARGIN AND BORDER RECESS.

REVISIONS					
DATE	BY	DESCRIPTION	DATE	BY	DESCRIPTION

CENTRAL FLORIDA EXPRESSWAY AUTHORITY

GUIDE SIGN WORKSHEET SIGNS 111, 112, 113, 114

PROJECT	SHEET NO.
STANDARDS	54

Sign	300
Quantity	
Width	9'-6"
Height	5'-0"
Border Width	1"
Border Radii	7.5"
Border Inset	
Background Color	BLUE / WHITE
Legend/Border Color	WHITE / BLACK
Sheeting	DG3
Arrow Size (Angle)	
Station/Structure	

CONSULTANT TO ADJUST TOLL RATE AS NECESSARY

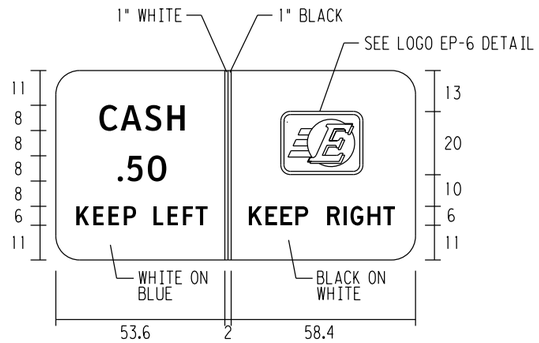

Copy Spacing																					Length	Size/Series
	C	A	S	H																	83.5	8 CV3W
13.8		27			12.8	2	15.7	26	16.7													
	.	5	0																		36	8 CV3W
19.6		15.4		18.6	2	58.4																
	K	E	E	P		L	E	F	T												49.1	6 CV3W
6.5		18.7			6		16.9			5.5	2	58.4										
			K	E	E	P		R	I	G	H	T									53.9	6 D
53.6	2	5.6		18.8			6			21.5			6.5									

Sign	301
Quantity	
Width	3'-6"
Height	1'-0"
Border Width	0.625"
Border Radii	2"
Border Inset	0.375"
Background Color	Yellow
Legend/Border Color	Black
Sheeting	DG3
Arrow Size (Angle)	
Station/Structure	

FOR POST MOUNT WITH SIGN 302

Copy Spacing																					Length	Size/Series
	P	A	Y		T	O	L	L													28.3	4 D
6.9		10		6		12.3			6.8													

Sign	302
Quantity	
Width	4'-0"
Height	4'-0"
Border Width	1.25"
Border Radii	3"
Border Inset	0.75"
Background Color	Yellow
Legend/Border Color	Black
Sheeting	DG3
Arrow Size (Angle)	
Station/Structure	

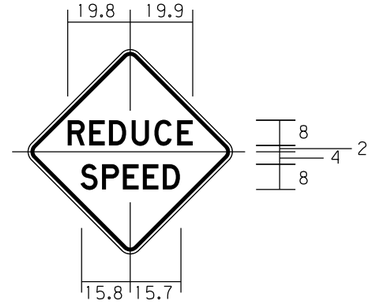

Copy Spacing																					Length	Size/Series
R	E	D	U	C	E																39.7	8 D
		39.7																				
S	P	E	E	D																	31.5	8 D
		31.5																				

Sign	303
Quantity	
Width	8'-0"
Height	5'-0"
Border Width	2"
Border Radii	7.5"
Border Inset	
Background Color	Blue
Legend/Border Color	White
Sheeting	DG3
Arrow Size (Angle)	
Station/Structure	

CONSULTANT TO ADJUST TOLL RATE AS NECESSARY

Copy Spacing																					Length	Size/Series
	C	A	S	H		L	A	N	E												67.5	8 CV4W
14.3		29.2			10		28.3			14.2												
	.	5	0																		17.1	8 CV4W
39.5		17.1		39.4																		
	K	E	E	P		L	E	F	T												62.8	8 CV4W
16.6		27.6			10		25.2			16.6												

RAMP PLAZA APPROACH SIGNING

NOTES: WIDTH - HORIZONTAL SPACING DIMENSIONS ARE IN INCHES. END DIMENSIONS INCLUDE BORDER WIDTH, MARGIN AND BORDER RECESS.

REVISIONS					
DATE	BY	DESCRIPTION	DATE	BY	DESCRIPTION

CENTRAL FLORIDA EXPRESSWAY AUTHORITY

GUIDE SIGN WORKSHEET SIGNS 300, 301, 302, 303

PROJECT	SHEET NO.
STANDARDS	55

Sign	304
Quantity	
Width	8'-0"
Height	5'-0"
Border Width	2"
Border Radii	7.5"
Border Inset	
Background Color	White
Legend/Border Color	Purple
Sheeting	DG3
Arrow Size (Angle)	
Station/Structure	

1. LETTER SPACING HAS BEEN INCREASED BY 10%.

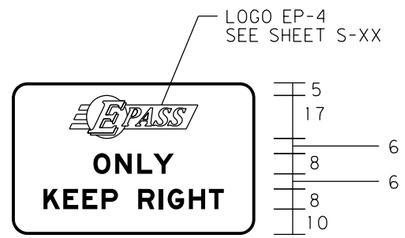

Copy Spacing

												Length	Size/Series
	E-PASS											53.3	
21.3	53.3	21.4											
	O	N	L	Y								32.3	8 EM
31.9	32.3				31.8								
	K	E	E	P		R	I	G	H	T		76.6	8 EM
9.7	30				12	34.6					9.7		

Sign	
Quantity	
Width	
Height	
Border Width	
Border Radii	
Border Inset	
Background Color	
Legend/Border Color	
Sheeting	
Arrow Size (Angle)	
Station/Structure	

INTENTIONALLY LEFT BLANK

Copy Spacing Length Size/Series

Sign	
Quantity	
Width	
Height	
Border Width	
Border Radii	
Border Inset	
Background Color	
Legend/Border Color	
Sheeting	
Arrow Size (Angle)	
Station/Structure	

INTENTIONALLY LEFT BLANK

Copy Spacing Length Size/Series

Sign	
Quantity	
Width	
Height	
Border Width	
Border Radii	
Border Inset	
Background Color	
Legend/Border Color	
Sheeting	
Arrow Size (Angle)	
Station/Structure	

INTENTIONALLY LEFT BLANK

Copy Spacing Length Size/Series

RAMP PLAZA
APPROACH SIGNING

NOTES: WIDTH - HORIZONTAL SPACING DIMENSIONS ARE IN INCHES. END DIMENSIONS INCLUDE BORDER WIDTH, MARGIN AND BORDER RECESS.

T:\Cadd\CFXway Standards 2014\A3-13.dgn
10/23/2014 11:18:50 AM
USER: STOD3416

REVISIONS

DATE	BY	DESCRIPTION	DATE	BY	DESCRIPTION

CENTRAL
FLORIDA
EXPRESSWAY
AUTHORITY

GUIDE SIGN WORKSHEET
SIGN 304

PROJECT	SHEET NO.
STANDARDS	56

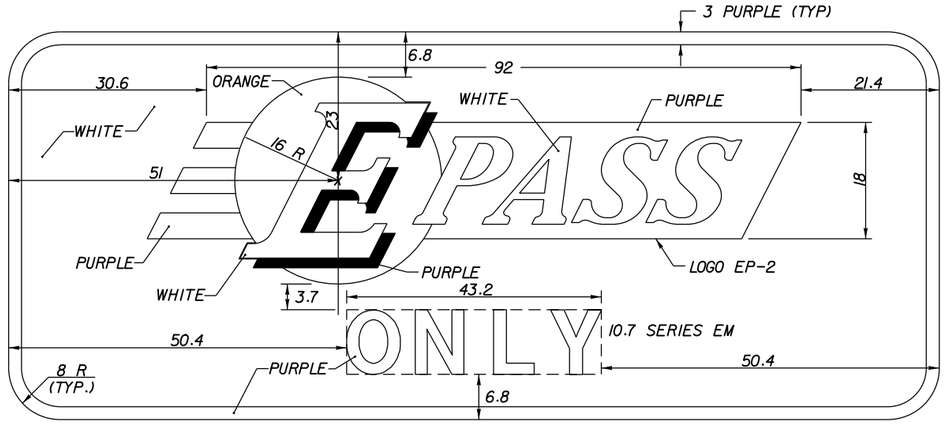

SIDE ONE DETAIL

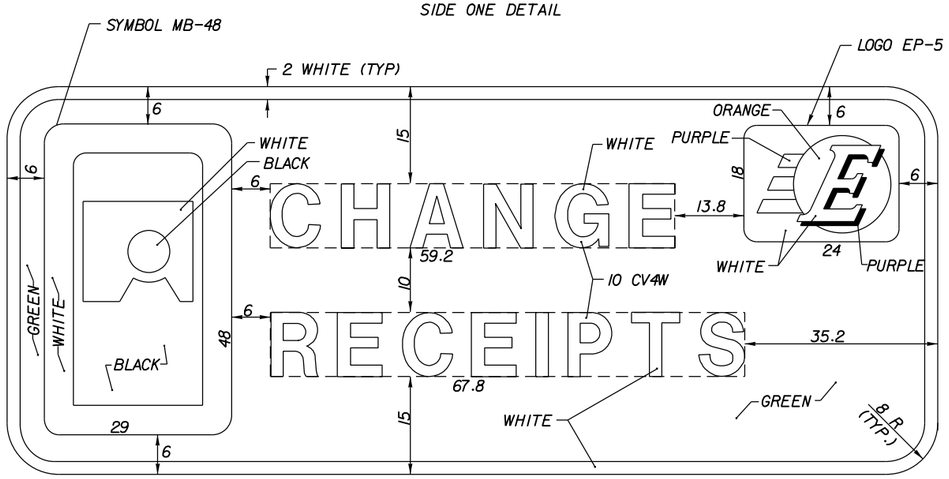

SIDE TWO DETAIL

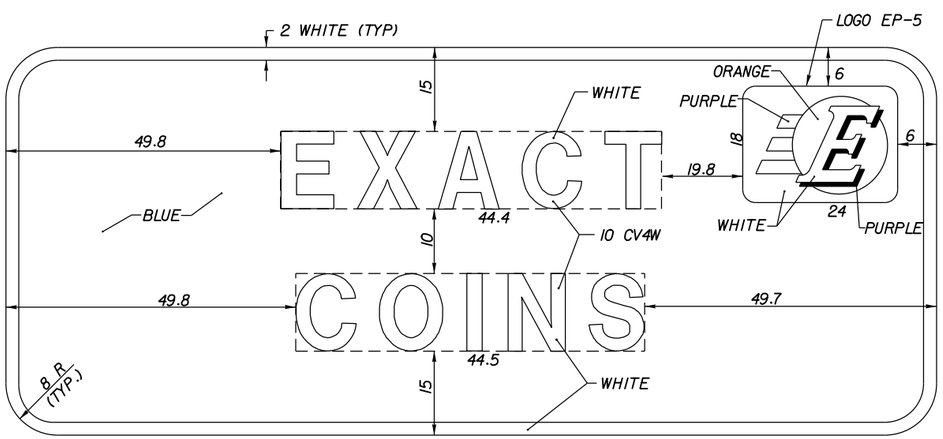

SIDE THREE DETAIL

12'-0" X 5'-0" (TYP)

SIGN MESSAGE SIDE ONE

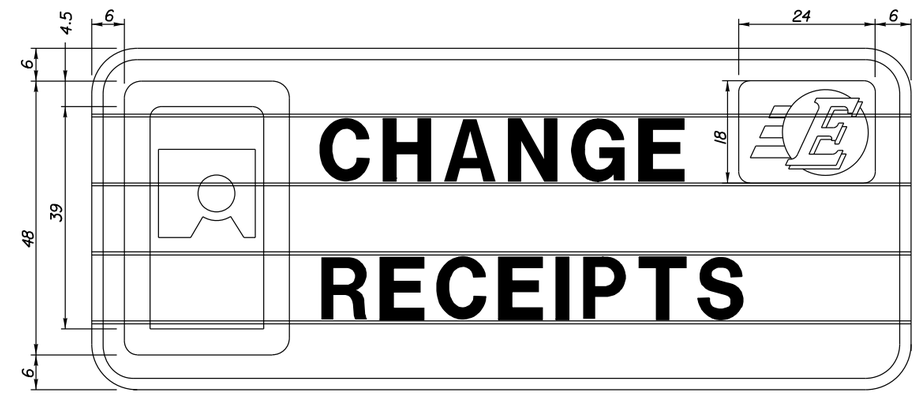

SIGN MESSAGE SIDE TWO

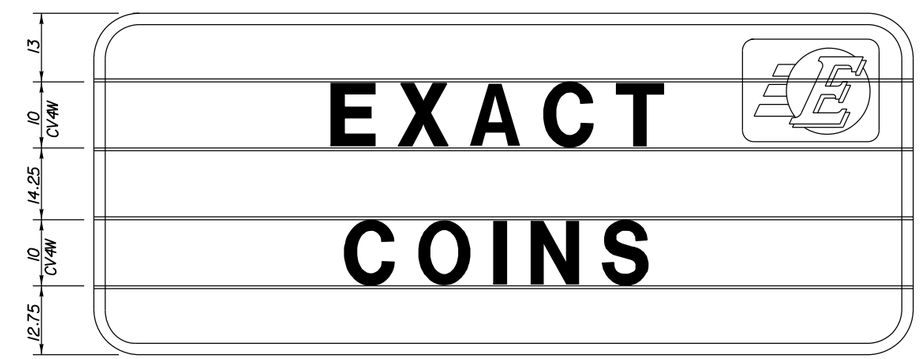

SIGN MESSAGE SIDE THREE

CMS SIGNING GENERAL NOTES:

1. ALL SIGN FACES SHALL HAVE A PRISMATIC RETROREFLECTIVE SHEETING, 3M COMPANY DIAMOND GRADE CUBED (DG3) OR AUTHORITY APPROVED EQUAL. SEE GENERAL NOTES FOR ADDITIONAL REQUIREMENTS.
2. ALL DIMENSIONS ARE IN INCHES.
3. VERTICAL DIMENSIONS TO BE ADJUSTED BY CMS FABRICATOR SUCH THAT EACH WORD IS PLACED ENTIRELY IN ONE DRUM FACE.
4. THE CONTRACTOR SHALL FURNISH AND INSTALL CHANGEABLE MESSAGE SIGNS, INTERSTATE HIGHWAY SIGN MOST CURRENT MODEL OR AUTHORITY APPROVED EQUAL.
5. SEE SHEET S-XX FOR DETAILS OF LOGO EP-2, LOGO EP-5 AND SYMBOL MB-48.

NOTES TO CONSULTANT:

1. ADD CROSS REFERENCE SHEET NUMBER TO NOTE 5.
2. DELETE THIS BOX WITH NOTES PRIOR TO INCLUDING SHEET IN PLANS.

REVISIONS

DATE	BY	DESCRIPTION	DATE	BY	DESCRIPTION

CENTRAL FLORIDA EXPRESSWAY AUTHORITY

GUIDE SIGN WORKSHEET
CMS CANOPY SIGN 400

PROJECT	SHEET NO.
STANDARDS	57

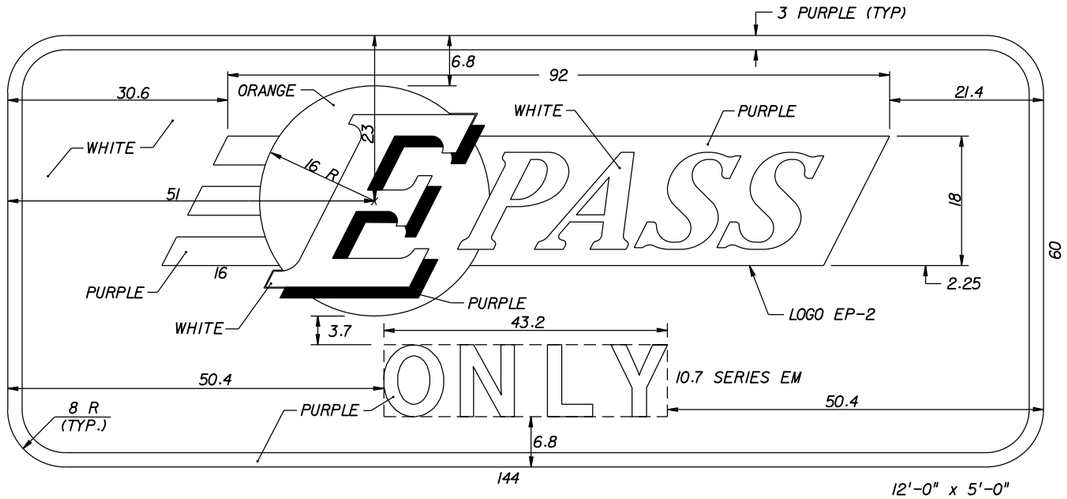

12'-0" x 5'-0"

SIGN 401

QUANTITY REQ'D. ___

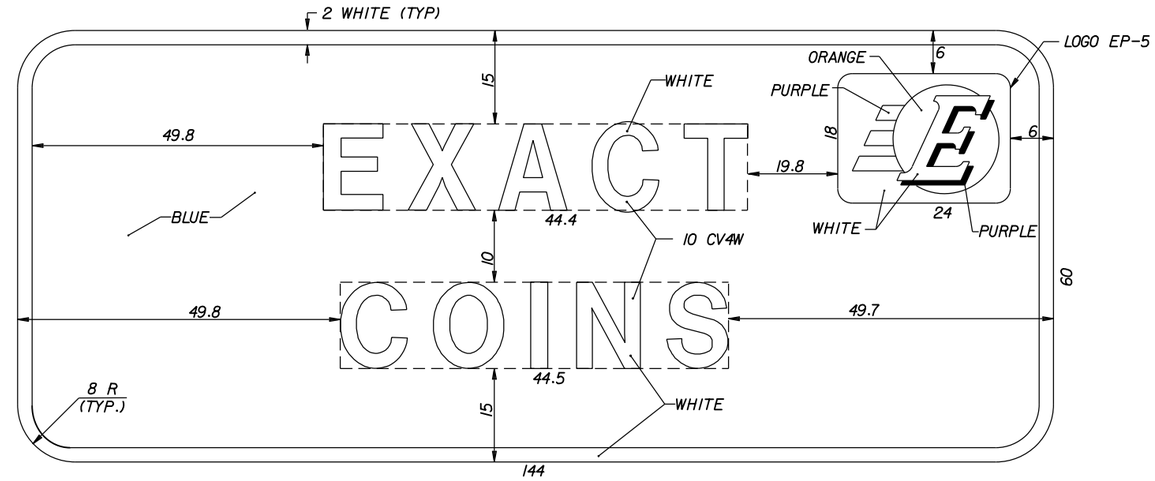

12'-0" X 5'-0"

SIGN 402

QUANTITY REQ'D.___

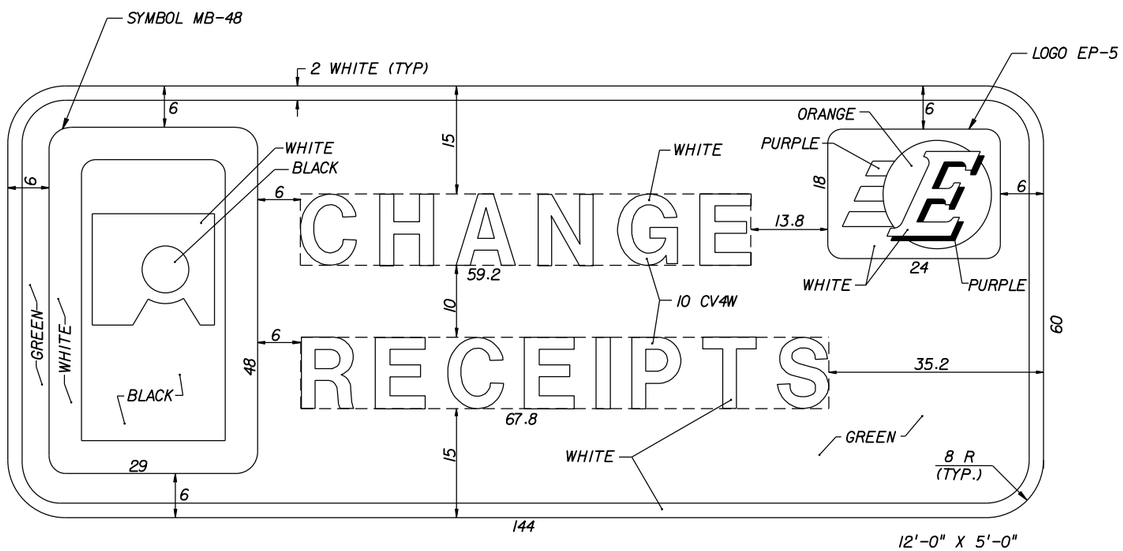

12'-0" X 5'-0"

SIGN 403

QUANTITY REQ'D.___

CANOPY SIGNING GENERAL NOTES SIGNS 401 thru 403

1. ALL SIGN FACES SHALL HAVE A PRISMATIC RETROREFLECTIVE SHEETING, 3M COMPANY DIAMOND GRADE CUBED (DG3) OR AUTHORITY APPROVED EQUAL. SEE GENERAL NOTES FOR ADDITIONAL REQUIREMENTS.
2. ALL DIMENSIONS ARE IN INCHES.
3. SEE SHEET S-XX FOR DETAILS OF LOGO EP-2, LOGO EP-5 AND SYMBOL MB-48.

NOTES TO CONSULTANT:

1. ADD CROSS REFERENCE SHEET NUMBER TO NOTE 3.
2. DELETE THIS BOX WITH NOTES PRIOR TO INCLUDING SHEET IN PLANS.

TOLL PLAZA CANOPY
STATIC SIGNS

REVISIONS					
DATE	BY	DESCRIPTION	DATE	BY	DESCRIPTION

CENTRAL FLORIDA EXPRESSWAY AUTHORITY

GUIDE SIGN WORKSHEET
SIGNS 401, 402, 403

PROJECT	SHEET NO.
STANDARDS	58

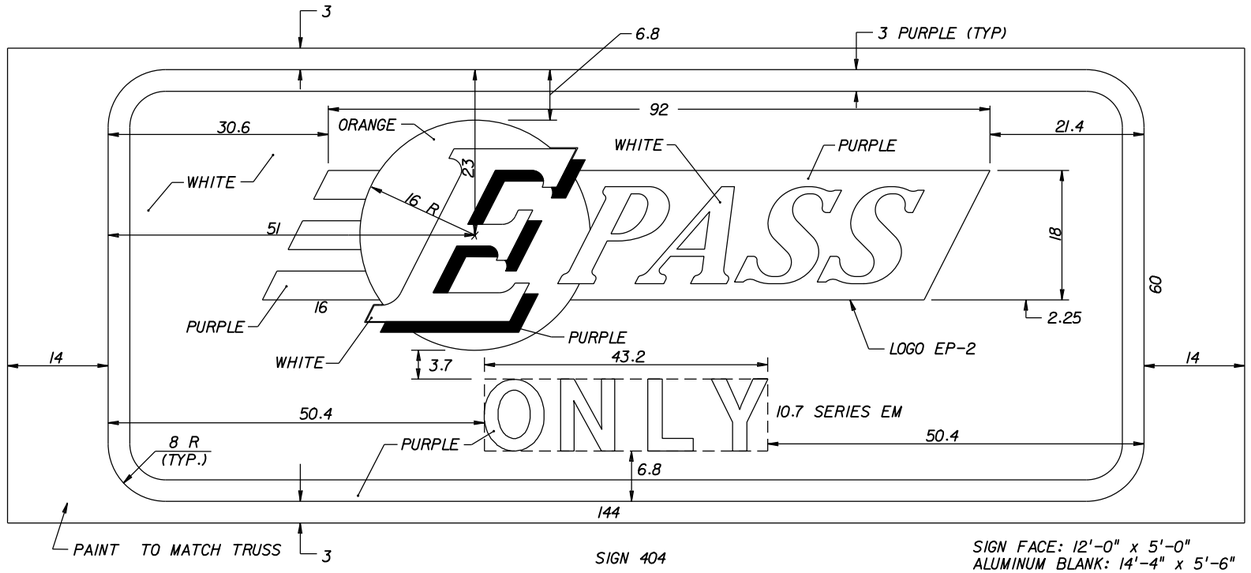

SIGN 404

SIGN FACE: 12'-0" x 5'-0"
ALUMINUM BLANK: 14'-4" x 5'-6"

QUANTITY REQ'D. __

GENERAL NOTES SIGNS 404, 405

1. SIGN FACES SHALL HAVE A PRISMATIC RETROREFLECTIVE SHEETING, 3M COMPANY DIAMOND GRADE CUBED (DG3) OR AUTHORITY APPROVED EQUAL. SEE GENERAL NOTES FOR ADDITIONAL REQUIREMENTS.
2. ALL DIMENSIONS ARE IN INCHES.
3. ALL SIDES OF THE ALUMININUM SURFACE OUTSIDE THE SIGN FACE AREA SHALL BE PAINTED TO MATCH THE TRUSS.
4. SEE SHEET S-XX FOR EP-2 AND EP-5 DETAILS.
5. THE SIGN FACE SHALL BE DIRECTLY APPLIED TO THE ALUMINUM SIGN BLANK.

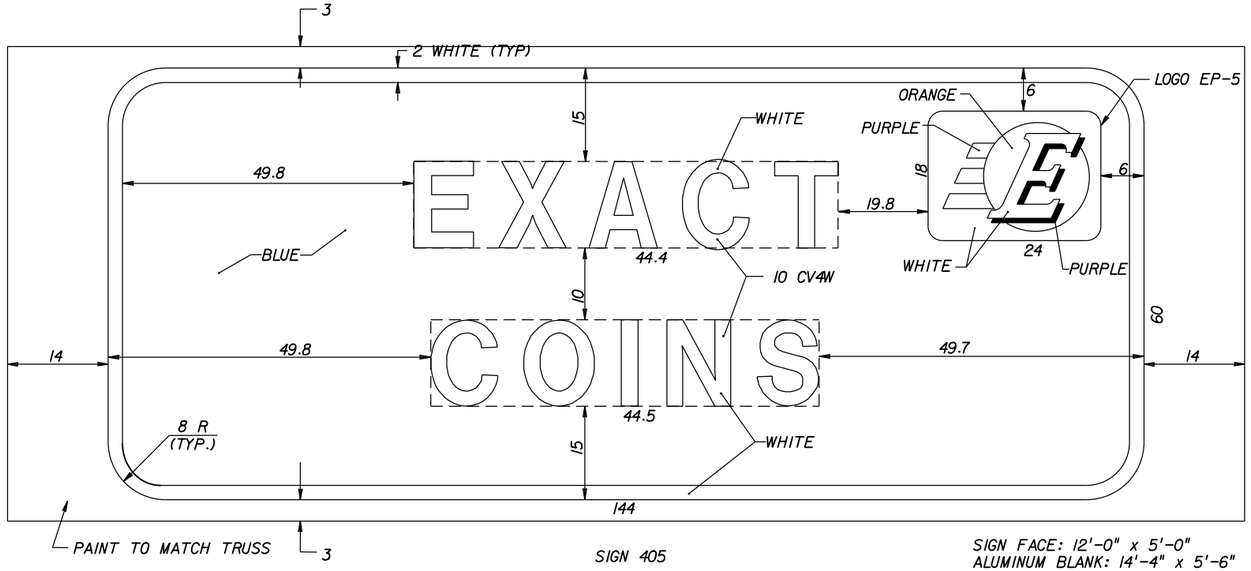

SIGN 405

SIGN FACE: 12'-0" x 5'-0"
ALUMINUM BLANK: 14'-4" x 5'-6"

QUANTITY REQ'D. __

NOTES TO CONSULTANT:

1. INSERT PROJECT SPECIFIC SHEET REFERENCE INTO NOTE 4.
2. DELETE THIS BOX WITH NOTES PRIOR TO INCLUDING SHEET IN PLANS.

RAMP TOLL PLAZA TRUSS
STATIC SIGNS

REVISIONS					
DATE	BY	DESCRIPTION	DATE	BY	DESCRIPTION

CENTRAL FLORIDA EXPRESSWAY AUTHORITY

GUIDE SIGN WORKSHEET
SIGNS 404, 405

PROJECT	SHEET NO.
STANDARDS	59

Sign	500
Quantity	
Width	3'-0"
Height	0'-7"
Border Width	0.5"
Border Radii	1"
Border Inset	
Background Color	White
Legend/Border Color	Black
Sheeting	DG3
Arrow Size (Angle)	
Station/Structure	

PAY TOLL

1.5
4
1.5

FOR USE ON MAINLINE TOLL PLAZA ISLANDS

CONSULTANT SHALL ADJUST PANEL WIDTH AS NECESSARY. SEE CHAPTER 13

Copy Spacing																						Length	Size/Series
	P	A	Y		T	O	L	L															
5.8	8.1			6	10.3				5.8													24.4	4 C

Sign	501
Quantity	
Width	1'-6"
Height	1'-0"
Border Width	0.625"
Border Radii	1.5"
Border Inset	0.375"
Background Color	Red
Legend/Border Color	White
Sheeting	DG3
Arrow Size (Angle)	
Station/Structure	

STAY IN
VEHICLE

2
3
2
3
2

1. SIGNS SHALL BE FABRICATED USING 0.08 ALUMINUM. PLASTIC MATERIALS SHALL NOT BE ALLOWED.
2. VHB TAPE SHALL BE USED WHEN INSTALLED ON COIN MACHINES OR TOLL BOOTHS.

Copy Spacing																						Length	Size/Series
	S	T	A	Y		I	N																
2.3	7.6			3	2.8			2.3														13.4	3 C
	V	E	H	I	C	L	E																
2.3	13.4							2.3														13.4	3 C

Sign	502
Quantity	
Width	4'-1"
Height	0'-7"
Border Width	0.5"
Border Radii	1"
Border Inset	
Background Color	Yellow
Legend/Border Color	Black
Sheeting	DG3
Arrow Size (Angle)	
Station/Structure	

1. FABRICATOR TO REDUCE INTERLETTER SPACING AS NEEDED TO FIT.

CONSULTANT SHALL ADJUST PANEL WIDTH AS NECESSARY. SEE CHAPTER 13

WATCH FOR PEDESTRIANS

1.5
4
1.5

Copy Spacing																						Length	Size/Series
	W	A	T	C	H		F	O	R		P	E	D	E	S	T	R	I	A	N	S		
1.7	10.9					3.5	5.9			3.5	21.7										1.8	45.5	4 B

Sign	503
Quantity	
Width	2'-6"
Height	1'-3"
Border Width	0.5"
Border Radii	1"
Border Inset	
Background Color	Yellow
Legend/Border Color	Black
Sheeting	DG3
Arrow Size (Angle)	
Station/Structure	

CONSULTANT SHALL ADJUST PANEL WIDTH AS NECESSARY. SEE CHAPTER 13

WATCH FOR
PEDESTRIANS

2
4
3
4
2

Copy Spacing																						Length	Size/Series
	W	A	T	C	H		F	O	R														
4.1	11.4					4	6.3			4.2												21.7	4 B
	P	E	D	E	S	T	R	I	A	N	S												
3.4	23.3										3.3											23.3	4 B

MAINLINE AND RAMP INTERIOR PLAZA SIGNING

NOTES: WIDTH - HORIZONTAL SPACING DIMENSIONS ARE IN INCHES. END DIMENSIONS INCLUDE BORDER WIDTH, MARGIN AND BORDER RECESS.

REVISIONS					
DATE	BY	DESCRIPTION	DATE	BY	DESCRIPTION

CENTRAL FLORIDA EXPRESSWAY AUTHORITY

GUIDE SIGN WORKSHEET
SIGNS 500, 501, 502, 503

PROJECT	SHEET NO.
STANDARDS	60

Sign	504
Quantity	
Width	2'-0"
Height	1'-0"
Border Width	0.5"
Border Radii	1.5"
Border Inset	0.375"
Background Color	White
Legend/Border Color	Red,Black/Black
Sheeting	DG3
Arrow Size (Angle)	
Station/Structure	

Copy Spacing																						Length	Size/Series
	D	O		N	O	T		S	T	O	P											15.9	2 C
4.1	2.7		2	3.9			2	5.3				4											
	P	R	O	C	E	E	D		A	H	E	A	D									18.9	2 C
2.6	9.8							2	7.1					2.5									

Sign	505
Quantity	
Width	1'-6"
Height	0'-11"
Border Width	0.25"
Border Radii	1.5"
Border Inset	0.125"
Background Color	White
Legend/Border Color	Black
Sheeting	DG3
Arrow Size (Angle)	
Station/Structure	

Copy Spacing																						Length	Size/Series
	W	A	I	T		F	O	R														16.1	3 C
0.9	7.1				3	6			1														
	G	R	E	E	N																	10.2	3 C
3.9	10.2					3.9																	

Sign	
Quantity	
Width	
Height	
Border Width	
Border Radii	
Border Inset	
Background Color	
Legend/Border Color	
Sheeting	
Arrow Size (Angle)	
Station/Structure	

Copy Spacing	Length	Size/Series

Sign	
Quantity	
Width	
Height	
Border Width	
Border Radii	
Border Inset	
Background Color	
Legend/Border Color	
Sheeting	
Arrow Size (Angle)	
Station/Structure	

Copy Spacing	Length	Size/Series

MAINLINE AND RAMP
INTERIOR PLAZA
SIGNING

NOTES: WIDTH - HORIZONTAL SPACING DIMENSIONS ARE IN INCHES. END DIMENSIONS INCLUDE BORDER WIDTH, MARGIN AND BORDER RECESS.

REVISIONS

DATE	BY	DESCRIPTION	DATE	BY	DESCRIPTION

CENTRAL
FLORIDA
EXPRESSWAY
AUTHORITY

GUIDE SIGN WORKSHEET
SIGNS 504, 505

PROJECT: STANDARDS

SHEET NO. 61

Sign	600
Quantity	
Width	3'-6"
Height	1'-6"
Border Width	0.5"
Border Radii	2.25"
Border Inset	0.125"
Background Color	White
Legend/Border Color	Red
Sheeting	DG3
Arrow Size (Angle)	
Station/Structure	

Copy Spacing																									Length	Size/Series
	T	O	W		A	W	A	Y		Z	O	N	E												39	4 C
1.5	8.4		4	11.4					4	11.2				1.5												
	U	N	A	U	T	H	O	R	I	Z	E	D		V	E	H	I	C	L	E	S				28.6	2 C
6.7	16.3												2	10.3								6.7				
	W	I	L	L		B	E		T	O	W	E	D												18.3	2 C
11.9	4.8			2	2.5		2	7						11.8												
	A	T		O	W	N	E	R	S		E	X	P	E	N	S	E								24.5	2 C
8.8	2.4		2	8.6						2	9.5							8.7								

Sign	601
Quantity	
Width	1'-0"
Height	1'-6"
Border Width	0.25"
Border Radii	1.5"
Border Inset	0.125"
Background Color	White
Legend/Border Color	Black
Sheeting	DG3
Arrow Size (Angle)	
Station/Structure	

* SPACING REDUCED 50%

Copy Spacing																									Length	Size/Series
	R	E	S	E	R	V	E	D																	9.8	2 C
1.1	9.8								1.1																	
	F	O	R																						3.6	2 C
4.2	3.6		4.2																							
	E	M	P	L	O	Y	E	E																	7.8	1.5 C
2.1	7.8								2.1																	
	O	F		T	H	E																			6	1.5 C
3	1.8		1.5	2.7			3																			
	Q	U	A	R	T	E	R																		6.5	1.5 C
2.8	6.5							2.7																		

Sign	602
Quantity	
Width	1'-6"
Height	1'-6"
Border Width	0.5"
Border Radii	2"
Border Inset	0.125"
Background Color	White
Legend/Border Color	Black
Sheeting	DG3
Arrow Size (Angle)	
Station/Structure	

AUTHORITY LOGO (L5)
SEE DETAIL

Copy Spacing																							Length	Size/Series
	R	E	S	E	R	V	E	D															12.7	2 D
2.7	12.7								2.6															
	P	A	R	K	I	N	G																10.9	2 D
3.6	10.9							3.5																
																							10.6	
3.7	10.6	3.7																						

Sign	603
Quantity	
Width	3'-6"
Height	3'-0"
Border Width	1"
Border Radii	4.5"
Border Inset	0.25"
Background Color	White
Legend/Border Color	Black
Sheeting	DG3
Arrow Size (Angle)	
Station/Structure	

AUTHORITY LOGO (L5)
SEE DETAIL

Copy Spacing																							Length	Size/Series
	A	U	T	H	O	R	I	Z	E	D													31.7	4 D
5.2	31.7										5.1													
	V	E	H	I	C	L	E	S															24.3	4 D
8.9	24.3								8.8															
	O	N	L	Y																			13.6	4 D
14.2	13.6				14.2																			
																							10.6	
15.7	10.6	15.7																						

MAINLINE TOLL PLAZA PARKING LOT SIGNS

NOTES: WIDTH - HORIZONTAL SPACING DIMENSIONS ARE IN INCHES. END DIMENSIONS INCLUDE BORDER WIDTH, MARGIN AND BORDER RECESS.

REVISIONS

DATE	BY	DESCRIPTION	DATE	BY	DESCRIPTION

CENTRAL FLORIDA EXPRESSWAY AUTHORITY

GUIDE SIGN WORKSHEET SIGNS 600, 601, 602, 603

PROJECT: STANDARDS

SHEET NO. 62

Sign	604
Quantity	
Width	2'-0"
Height	2'-6"
Border Width	0.5"
Border Radii	1.5"
Border Inset	0.375"
Background Color	White
Legend/Border Color	Black
Sheeting	DG3
Arrow Size (Angle)	
Station/Structure	

SPACING OF WORD "FACILITIES" HAS BEEN REDUCED TO FIT

Copy Spacing												Length	Size/Series
	N	O										5.4	4 C
9.3	5.4		9.3										
	P	U	B	L	I	C						15.3	4 C
4.4			15.3				4.3						
	F	A	C	I	L	I	T	I	E	S		20.7	4 C
1.7					20.7						1.6		

Sign	
Quantity	
Width	
Height	
Border Width	
Border Radii	
Border Inset	
Background Color	
Legend/Border Color	
Sheeting	
Arrow Size (Angle)	
Station/Structure	

INTENTIONALLY LEFT BLANK

Copy Spacing	Length	Size/Series

Sign	
Quantity	
Width	
Height	
Border Width	
Border Radii	
Border Inset	
Background Color	
Legend/Border Color	
Sheeting	
Arrow Size (Angle)	
Station/Structure	

INTENTIONALLY LEFT BLANK

Copy Spacing	Length	Size/Series

Sign	
Quantity	
Width	
Height	
Border Width	
Border Radii	
Border Inset	
Background Color	
Legend/Border Color	
Sheeting	
Arrow Size (Angle)	
Station/Structure	

INTENTIONALLY LEFT BLANK

Copy Spacing	Length	Size/Series

*MAINLINE TOLL PLAZA
PARKING LOT SIGNS*

NOTES: WIDTH - HORIZONTAL SPACING DIMENSIONS ARE IN INCHES. END DIMENSIONS INCLUDE BORDER WIDTH, MARGIN AND BORDER RECESS.

USER: STOD3416 10/23/2014 11:18:54 AM T:\Cadd\CFXway Standards 2014\A3-19.dgn

REVISIONS					
DATE	BY	DESCRIPTION	DATE	BY	DESCRIPTION

CENTRAL
FLORIDA
EXPRESSWAY
AUTHORITY

*GUIDE SIGN WORKSHEET
SIGN 604*

PROJECT	SHEET NO.
STANDARDS	63

Sign	700
Quantity	
Width	14'-6"
Height	10'-6"
Border Width	2"
Border Radii	12"
Border Inset	
Background Color	White
Legend/Border Color	Black
Sheeting	DG3
Arrow Size (Angle)	
Station/Structure	

SPACE BETWEEN LETTERS HAS BEEN INCREASED BY 10%

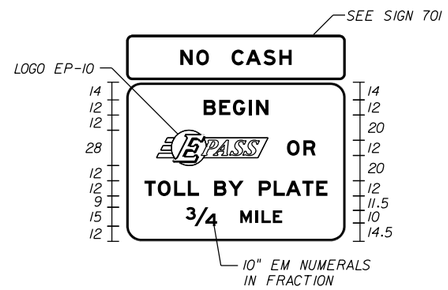

Copy Spacing																					Length	Size/Series
	B	E	G	I	N																52.5	12 EM
60.8	52.5					60.7																
	EPASS		O	R																	126.5	12 EM
23.8	88.5	15	23		23.7																	
	T	O	L	L		B	Y		P	L	A	T	E								146.4	12 EM
13.8	43.9			12	23.4		12	55.1						13.8								
	3/4		M	I	L	E															74	10 EM
50	25	15	34				50															

Sign	701
Quantity	
Width	14'-6"
Height	3'-0"
Border Width	2"
Border Radii	5"
Border Inset	
Background Color	Yellow
Legend/Border Color	Black
Sheeting	DG3
Arrow Size (Angle)	
Station/Structure	

SPACE BETWEEN LETTERS HAS BEEN INCREASED BY 10%

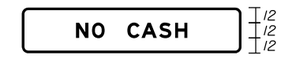

Copy Spacing																					Length	Size/Series
	N	O		C	A	S	H														89.2	12 EM
42.4	23	18	48.2				42.4															

Sign	702
Quantity	
Width	15'-0"
Height	4'-0"
Border Width	2"
Border Radii	12"
Border Inset	
Background Color	White
Legend/Border Color	Black
Sheeting	DG3
Arrow Size (Angle)	
Station/Structure	

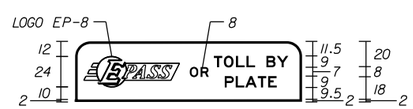

Copy Spacing																					Length	Size/Series
	EPASS		O	R		T	O	L	L		B	Y									166.2	8 & 9 E
6.9	75.9	8	15.1		8	32.7				9	17.5		6.9									
	P	L	A	T	E																41.2	9 E
122.9	41.2					15.9																

Sign	
Quantity	
Width	
Height	
Border Width	
Border Radii	
Border Inset	
Background Color	
Legend/Border Color	
Sheeting	
Arrow Size (Angle)	
Station/Structure	

NOTES TO CONSULTANT:

1. HEIGHT OF SIGN 701 SHALL BE 3'-0" AND LEGEND SHALL BE 12" EM. WIDTH SHALL MATCH MAIN PANEL. INCREASE OR DECREASE SIDE MARGINS AS NEEDED.
2. MINIMUM WIDTH OF SIGN 702 SHALL BE 15'-0" FOR CROSSROAD OVERHEAD GUIDE SIGNS. HEIGHT SHALL REMAIN 4'-0" REGARDLESS OF WIDTH.
3. WHEN THE WHITE ON GREEN PORTION OF THE GUIDE SIGN IS WIDER THAN 15'-0", ELEMENTS WITHIN SIGN 702 SHALL REMAIN AS SHOWN. INCREASE SIDE MARGINS AS NECESSARY.
4. CONSULTANT TO DELETE THIS BOX AND NOTES PRIOR TO INCLUDING SHEET IN PLANS.

Copy Spacing	Length	Size/Series

AET SIGN DETAILS

NOTES: WIDTH - HORIZONTAL SPACING DIMENSIONS ARE IN INCHES. END DIMENSIONS INCLUDE BORDER WIDTH, MARGIN AND BORDER RECESS.

REVISIONS

DATE	BY	DESCRIPTION	DATE	BY	DESCRIPTION

CENTRAL FLORIDA EXPRESSWAY AUTHORITY

GUIDE SIGN WORKSHEET SIGNS 700, 701, 702

PROJECT: STANDARDS

SHEET NO. 64

Sign	703
Quantity	
Width	18'-0"
Height	10'-0"
Border Width	2"
Border Radii	12"
Border Inset	
Background Color	White
Legend/Border Color	Black
Sheeting	DG3
Arrow Size (Angle)	
Station/Structure	

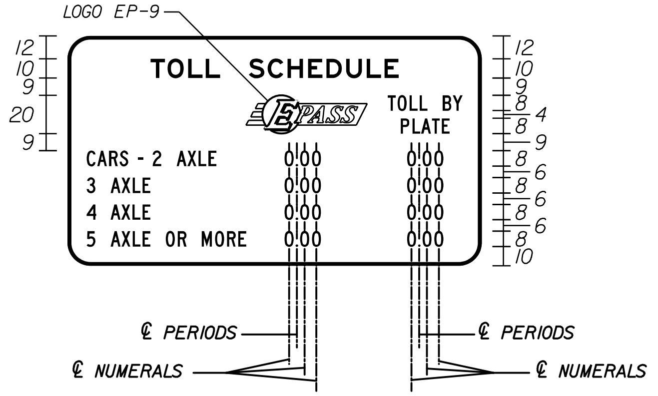

NOTES:

1. NUMERAL SPACING TO BE ADJUSTED SUCH THAT PERIODS AND COLUMNS OF NUMERALS LINE UP VERTICALLY.
2. EACH COLUMN OF TOLL RATES TO BE CENTERED UNDER METHOD OF PAYMENT.
3. BASED ON NOTES 1 AND 2, SPACE BETWEEN "AXLE" AND TOLL RATES IS SUBJECT TO CHANGE. ALSO APPLIES TO SIDE MARGINS ADJACENT TO TOLL RATES.
4. CENTERLINES ARE FOR INFORMATIONAL PURPOSES ONLY.

Copy Spacing

																										Length	Size/Series
	T	O	L	L		S	C	H	E	D	U	L	E													129.5	10" E
43.2	36.3				15	78.2								43.3													
	E-PASS		T	O	L	L		B	Y																	112.9	8" C
93.1	63.2	10.7	20.7				8	10.3		10																	
	P	L	A	T	E																					25.5	8" C
173.8	25.5					16.7																					
	C	A	R	S		-		2		A	X	L	E		0	.	0	0		0	.	0	0			186	8" C
10	21.6				5	6	5	4.5	8	20.7				34.4	19				42.8	19				20			
	3		A	X	L	E		0	.	0	0		0	.	0	0										186	8" C
10	4.5	8	20.7				72	19				42.8	19				20										
	4		A	X	L	E		0	.	0	0		0	.	0	0										186	8" C
10	5	7.5	20.7				72	19				42.8	19				20										
	5		A	X	L	E		O	R		M	O	R	E		0	.	0	0		0	.	0	0		186	8" C
10	4.5	8	20.7				8	10.8		8	23.1				22.1	19				42.8	19				20		

Sign	704
Quantity	
Width	14'-0"
Height	7'-0"
Border Width	1.5"
Border Radii	10.5"
Border Inset	0.5"
Background Color	White
Legend/Border Color	Black
Sheeting	DG3
Arrow Size (Angle)	
Station/Structure	

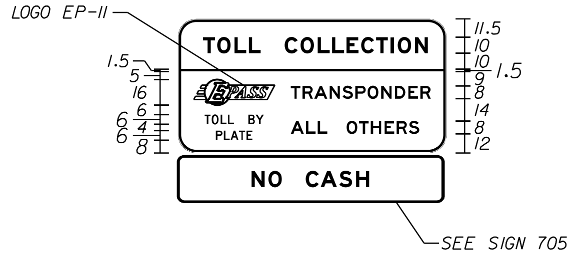

NOTES:
1. SPACING BETWEEN LETTERS IN SERIES EM HAS BEEN INCREASED BY 10%.

Copy Spacing

																					Length	Size/Series
	T	O	L	L		C	O	L	L	E	C	T	I	O	N						142.9	10 EM
12.6	36.6				15	91.3										12.5						
	E-PASS		T	R	A	N	S	P	O	N	D	E	R								148.2	8 E
9.9	50.6	10	87.6											9.9								
	T	O	L	L		B	Y		A	L	L		O	T	H	E	R	S			128.3	6 D / 8 E
16.7	18.4				9	9.7		16.7	22.9			12	45.5						17.1			
	P	L	A	T	E																22.9	6 D
23.8	22.9					121.3																

Sign	705
Quantity	
Width	14'-0"
Height	2'-6"
Border Width	1.5"
Border Radii	4"
Border Inset	0.5"
Background Color	Yellow
Legend/Border Color	Black
Sheeting	DG3
Arrow Size (Angle)	
Station/Structure	

SPACE BETWEEN LETTERS HAS BEEN INCREASED BY 10%.

Copy Spacing

																					Length	Size/Series
	N	O		C	A	S	H														74.3	10 EM
46.9	19.2		15	40.1				46.8														

AET SIGN DETAILS

NOTES: WIDTH - HORIZONTAL SPACING DIMENSIONS ARE IN INCHES. END DIMENSIONS INCLUDE BORDER WIDTH, MARGIN AND BORDER RECESS.

REVISIONS

DATE	BY	DESCRIPTION	DATE	BY	DESCRIPTION

CENTRAL
FLORIDA
EXPRESSWAY
AUTHORITY

GUIDE SIGN WORKSHEET
SIGNS 703, 704, 705

PROJECT	SHEET NO.
STANDARDS	65

USER: STOD3416 10/23/2014 11:18:55 AM T:\Cadd\CFXway Standards 2014\A3-18B.dgn

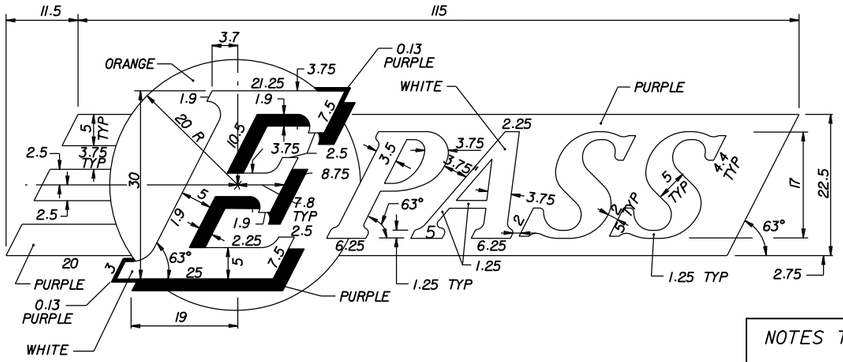

LOGO EP-1

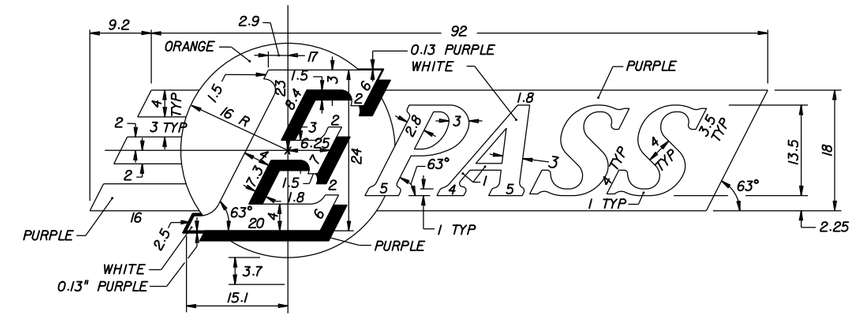

LOGO EP-2

NOTES TO CONSULTANT:

1. DELETE ALL INFORMATION NOT SPECIFIC TO PROJECT.

2. DELETE BOX WITH NOTES PRIOR TO INCLUDING SHEET IN PLANS.

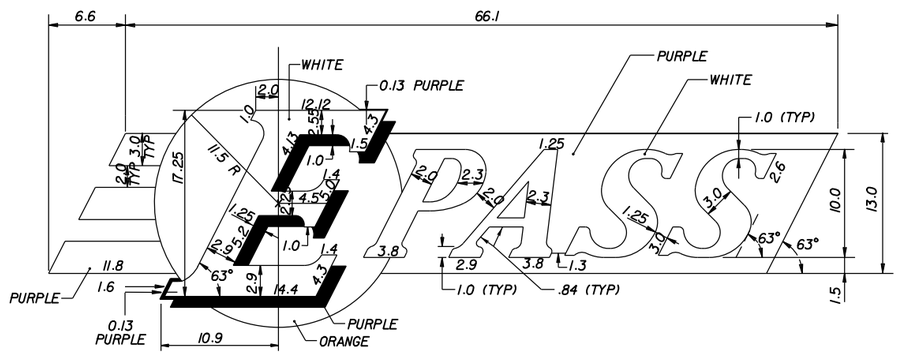

LOGO EP-3

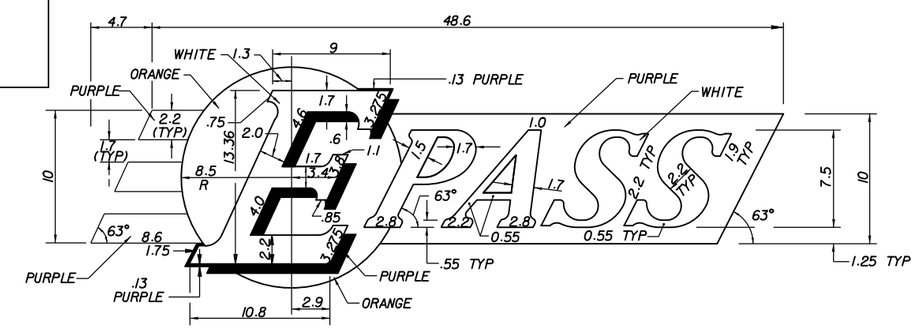

LOGO EP-4

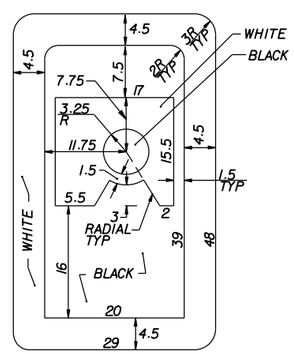

SYMBOL MB-48

EP LOGO NOTES:

1. ALL LOGOS AND SYMBOLS SHALL HAVE PRISMATIC RETROREFLECTIVE SHEETING, 3M COMPANY DIAMOND GRADE CUBED (DG3) OR AUTHORITY APPROVED EQUAL.

2. EPASS LOGO COLORS:

   WHITE
   PURPLE, 3M COMPANY DG3 RETROREFLECTIVE SHEETING MATCHING 3M 1170-13 VIOLET EC FILM OR AUTHORITY APPROVED EQUAL.
   ORANGE, 3M EC FILM SERIES 1174 OR AUTHORITY APPROVED EQUAL.

3. IF COLORS AND/OR SHEETING OTHER THAN THOSE NOTED SPECIFICALLY AS 3M COMPANY ARE TO BE USED, CONTRACTOR SHALL SUBMIT 4"x4" SAMPLES OF EACH IN ALL REQUIRED COLORS. NO FABRICATION SHALL COMMENCE UNTIL SAMPLES HAVE BEEN REVIEWED AND WRITTEN ACCEPTANCE RECEIVED FROM THE AUTHORITY. SEE GENERAL NOTES FOR ADDITIONAL REQUIREMENTS.

4. FABRICATOR SHALL APPLY AS THE TOP LAYER, 3M COMPANY EC FILM 1170 CLEAR ON THE AUTHORITY DESIGNATED ORANGE. INSTALLATION SHALL BE PART OF A 3M MATCHED COMPONENT SYSTEM AND MEET ALL 3M SIGN FABRICATION REQUIREMENTS. CONTACT 3M AT 1-800-553-1380.

5. NARROW PORTIONS OF SPECIAL DESIGN COPY IN EPASS LOGOS SHALL HAVE MINIMUM THICKNESS AS FOLLOWS:

EP-1 = 1.25	EP-5 = 0.75	EP-9 = 0.63
EP-2 = 1.00	EP-6 = 0.75	EP-10 = 0.88
EP-3 = 0.84	EP-7 = 1.10	EP-11 = 0.50
EP-4 = 0.55	EP-8 = 0.75	

6. ALL DIMENSIONS ARE IN INCHES.

7. FABRICATOR TO BE GIVEN A COMPUTER DISK OF ARTWORK AS NEEDED UPON REQUEST. FABRICATOR MUST SPECIFY FILE FORMAT REQUIRED HOWEVER, SOME FORMATS MAY NOT BE AVAILABLE.

8. DRAWINGS ARE NOT TO SCALE.

9. LOGO EP-7 IS TO BE MOUNTED TO THE TOP OF EXISTING OVERHEAD GUIDE SIGNS IN A SIMILAR FASHION AS EXIT NUMBER PLAQUES. SEE INDEX 13417.

REVISIONS

DATE	BY	DESCRIPTION	DATE	BY	DESCRIPTION

CENTRAL FLORIDA EXPRESSWAY AUTHORITY

EPASS LOGOS EP-1 THRU EP-4
BOOTH SYMBOL

PROJECT	SHEET NO.
STANDARDS	66

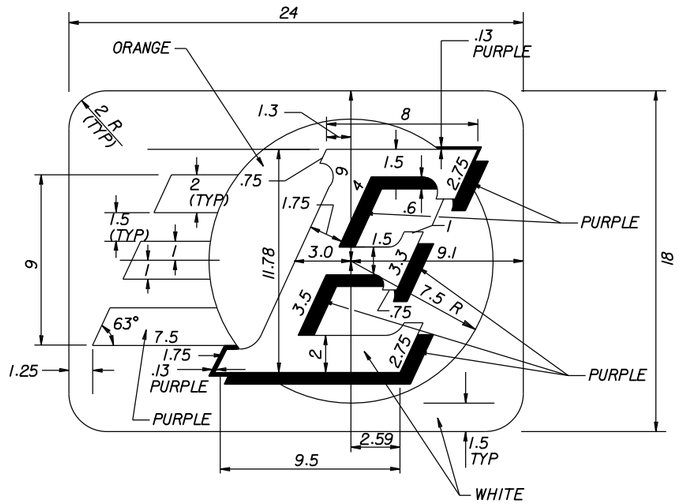

LOGO EP-5

NOTES TO CONSULTANT:

1. DELETE ALL INFORMATION NOT SPECIFIC TO PROJECT.
2. NOTES ON SHEET 66 APPLY TO EP-1 THRU EP-11.
3. ALL EP LOGOS AND NOTES APPLICABLE TO PROJECT SHOULD BE COMBINED ONTO ONE SHEET WHEN POSSIBLE.
4. DELETE BOX WITH NOTES PRIOR TO INCLUDING SHEET IN PLANS.

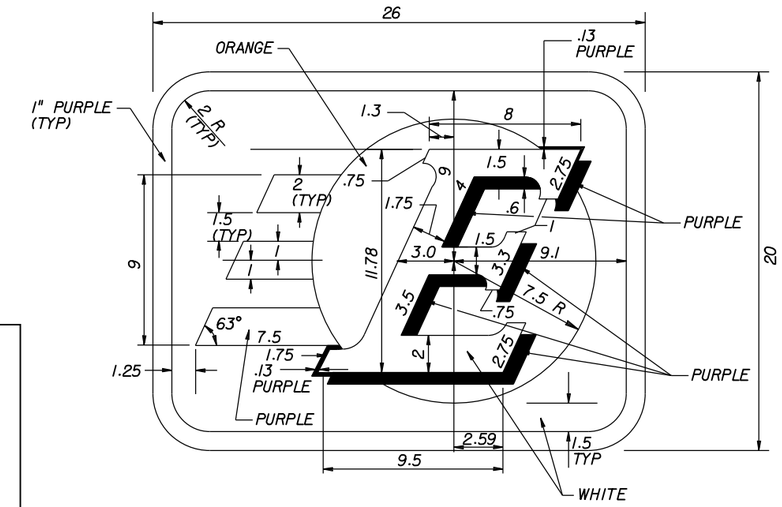

LOGO EP-6

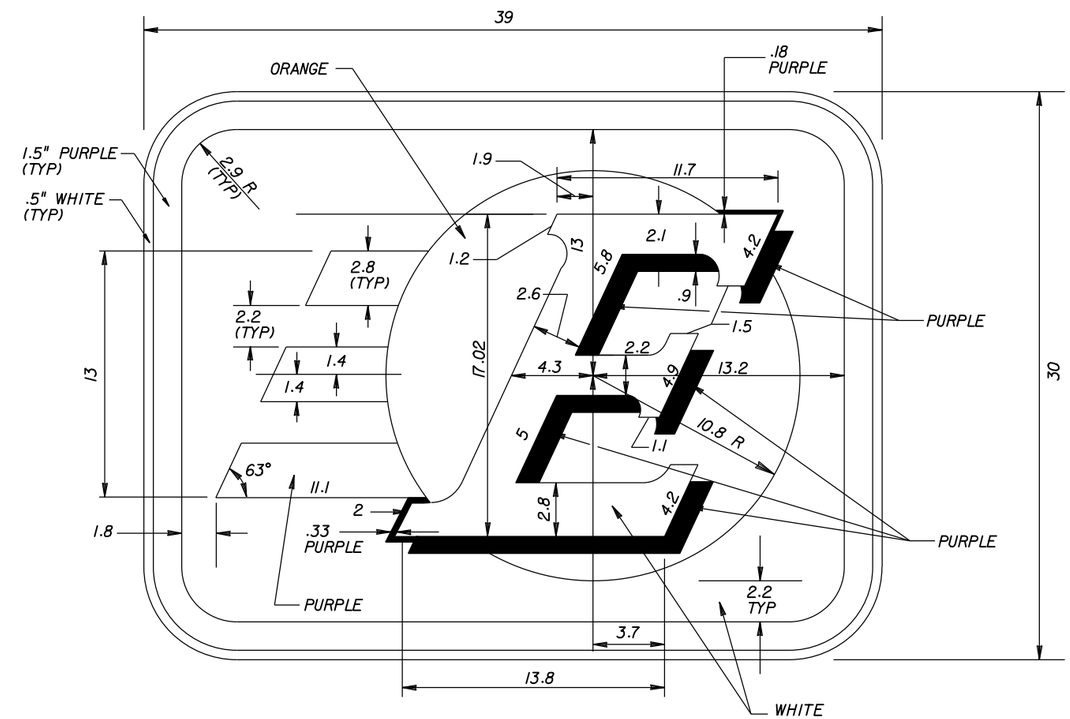

LOGO EP-7

REVISIONS					
DATE	BY	DESCRIPTION	DATE	BY	DESCRIPTION

CENTRAL FLORIDA EXPRESSWAY AUTHORITY

EPASS LOGOS EP-5 THRU EP-7

PROJECT	SHEET NO.
STANDARDS	67

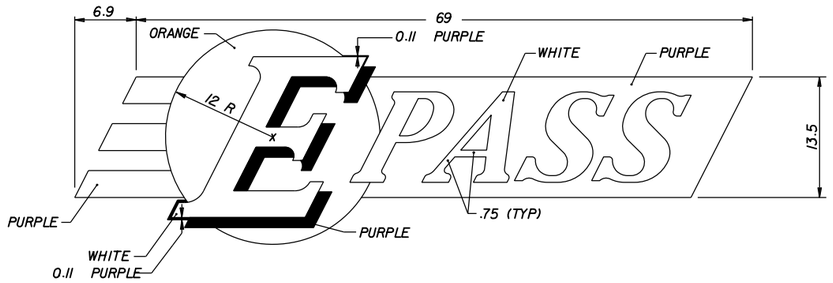

LOGO EP-8

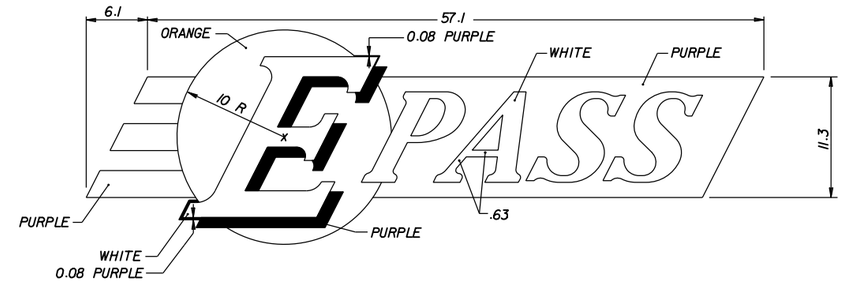

LOGO EP-9

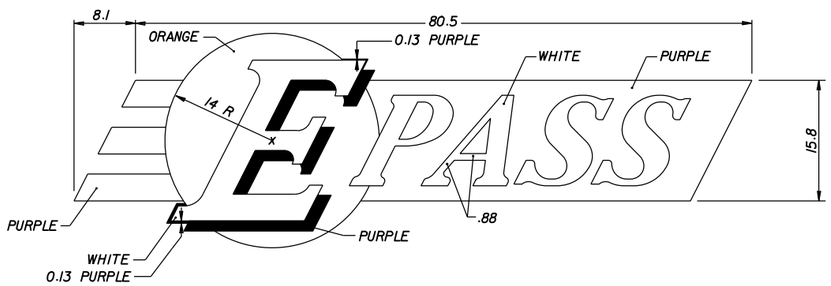

LOGO EP-10

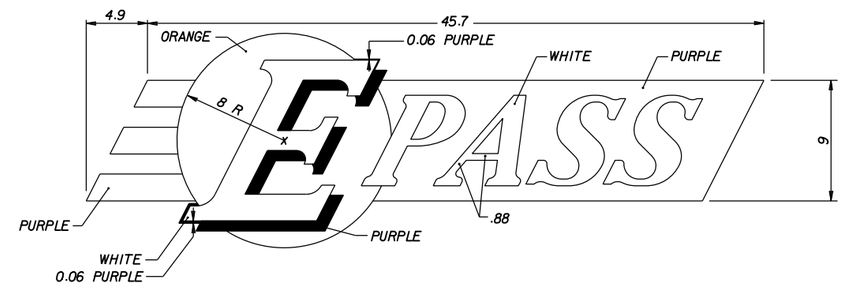

LOGO EP-11

NOTES TO CONSULTANT:

1. DELETE ALL INFORMATION NOT SPECIFIC TO PROJECT.
2. NOTES ON SHEET 66 APPLY TO EP-1 THRU EP-11.
3. ALL EP LOGOS AND NOTES APPLICABLE TO PROJECT SHOULD BE COMBINED ONTO ONE SHEET WHEN POSSIBLE.
4. DELETE BOX WITH NOTES PRIOR TO INCLUDING SHEET IN PLANS.

AET SIGN DETAILS

REVISIONS					
DATE	BY	DESCRIPTION	DATE	BY	DESCRIPTION

CENTRAL FLORIDA EXPRESSWAY AUTHORITY

EPASS LOGOS EP-8 THRU EP-11

PROJECT	SHEET NO.
STANDARDS	68

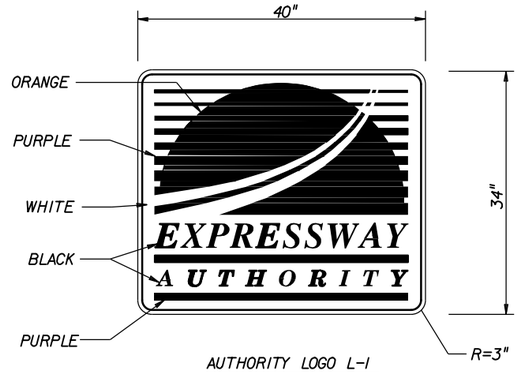

AUTHORITY LOGO L-1
QUANTITY REQ'D ____

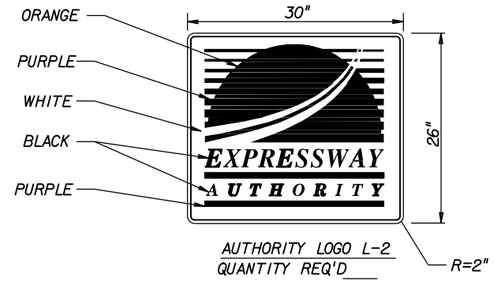

AUTHORITY LOGO L-2
QUANTITY REQ'D ____

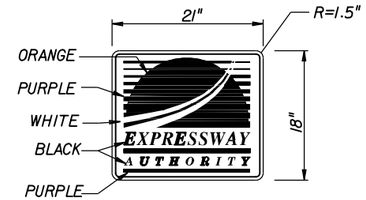

AUTHORITY LOGO L-3
QUANTITY REQ'D ____

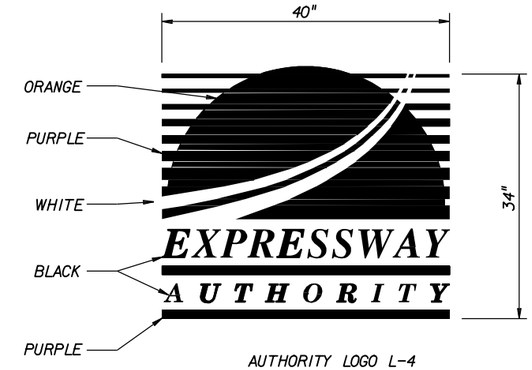

AUTHORITY LOGO L-4
QUANTITY REQ'D ____

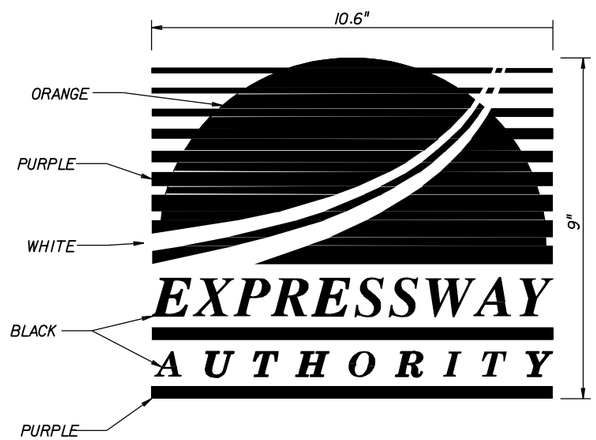

AUTHORITY LOGO L-5
QUANTITY REQ'D ____

LOGO NOTES

1. CONTRACTOR TO BE GIVEN A COMPUTER DISK OF EACH AUTHORITY LOGO FOR USE IN SIGN FABRICATION UPON REQUEST.

2. LOGOS SHALL BE 3M COMPANY DIAMOND GRADE CUBED (DG3) REFLECTIVE SHEETING OR AUTHORITY APPROVED EQUAL.
   COLORS:
   - BLACK
   - WHITE
   - PURPLE, 3M COMPANY DG3 SHEETING MATCHING 3M 1170-3 VIOLET EC FILM OR AUTHORITY APPROVED EQUAL
   - ORANGE, 3M COMPANY EC FILM NO. 1174 OR AUTHORITY APPROVED EQUAL

3. LOGO L-1 (DIMENSIONS IN INCHES):
   BORDER COLOR = PURPLE
   BORDER WIDTH = 0.375
   BORDER INSET = 0.375

4. LOGOS L-2 AND L-3 (DIMENSIONS IN INCHES):
   BORDER COLOR = PURPLE
   BORDER WIDTH = 0.25
   BORDER INSET = 0.25

5. LOGOS L-4 AND L-5 SHALL NOT HAVE A BORDER.

6. LOGO L-4 SHALL ONLY BE USED ON BEGIN/END SYSTEM SIGNS.

7. LOGO L-5 SHALL ONLY BE USED ON PARKING LOT SIGNS.

8. SHOP DRAWINGS ARE REQUIRED.

9. IF COLORS AND/OR SHEETING OTHER THAN THOSE NOTED SPECIFICALLY AS 3M COMPANY ARE TO BE USED, CONTRACTOR SHALL PROVIDE 4" x 4" SAMPLES OF EACH IN EACH APPLICABLE COLOR. NO FABRICATION SHALL COMMENCE UNTIL THE SAMPLES HAVE BEEN REVIEWED AND WRITTEN ACCEPTANCE RECEIVED FROM THE AUTHORITY. SEE GENERAL NOTES FOR ADDITIONAL REQUIREMENTS.

10. FABICATOR SHALL APPLY AS THE TOP LAYER, 3M COMPANY EC FILM 1170 CLEAR ON THE AUTHORITY DESIGNATED ORANGE. INSTALLATION SHALL BE PART OF A 3M MATCHED COMPONENT SYSTEM AND MEET ALL 3M SIGN FABRICATION REQUIREMENTS. CONTACT 3M COMPANY 1-800-553-1380.

NOTES TO CONSULTANT:

1. DELETE ALL INFORMATION NOT SPECIFIC TO PROJECT.

2. DELETE BOX WITH NOTES PRIOR TO INCLUDING SHEET IN PLANS.

REVISIONS					
DATE	BY	DESCRIPTION	DATE	BY	DESCRIPTION

CENTRAL FLORIDA EXPRESSWAY AUTHORITY

AUTHORITY LOGOS
L-1 THRU L-5

PROJECT	SHEET NO.
STANDARDS	69

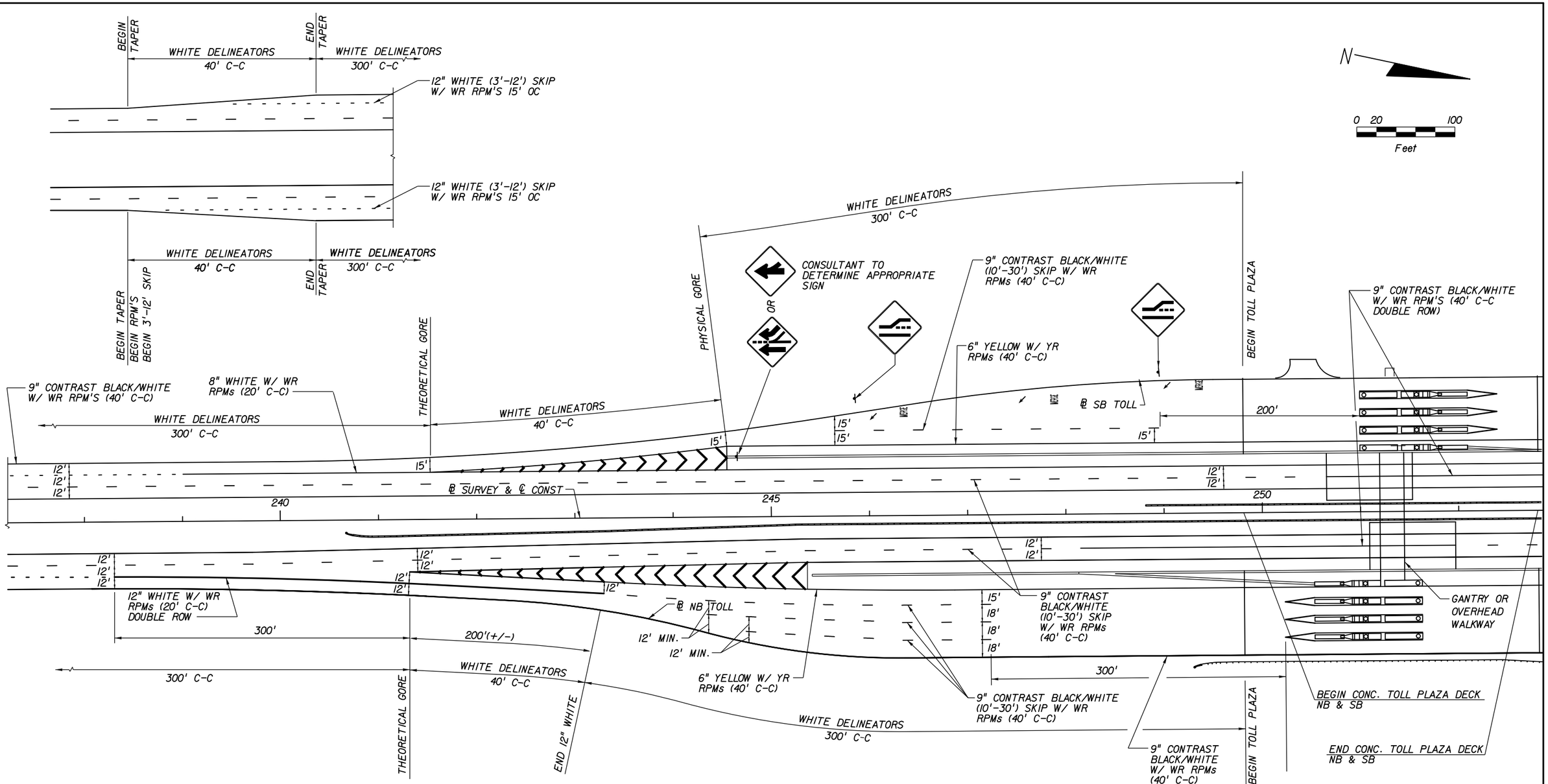

REVISIONS					
DATE	BY	DESCRIPTION	DATE	BY	DESCRIPTION

CENTRAL FLORIDA EXPRESSWAY AUTHORITY

TYPICAL PAVEMENT MARKINGS AND DELINEATOR SPACING ORT TOLL PLAZAS

PROJECT	SHEET NO.
STANDARDS	70

USER: ST0D3416 10/23/2014 11:18:59 AM T:\Cadd\CFXway Standards 2014\A5-04.dgn

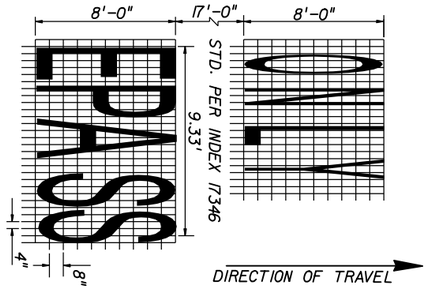

NOTES:

1. EACH WORD TO BE CENTERED WITHIN LANE.
2. PAVEMENT MESSAGES TO BE 3M SERIES 380IES.

DETAIL A - RAMP PLAZA
PAVEMENT MARKING MESSAGE DETAIL
N.T.S.

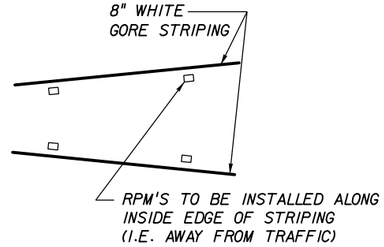

DETAIL D
RPM PLACEMENT WITHIN ISLAND GORES
N.T.S.

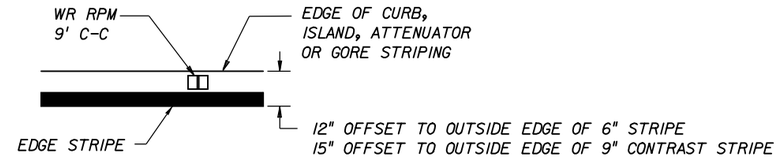

DETAIL E
RPM PLACEMENT DETAIL
N.T.S.

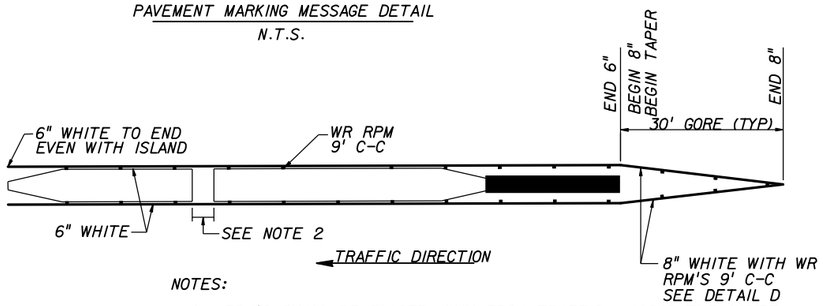

NOTES:

1. RPM'S SHALL BE PLACED AWAY FROM TRAFFIC. ALONG THE INSIDE EDGE OF ALL STRIPING THROUGH CURB, ISLAND, AND ISLAND GORE AREAS.
2. RPM'S SHALL NOT BE PLACED THROUGH ISLAND WALKWAY AREAS.

DETAIL B - MAINLINE PLAZA
TYPICAL 6' ISLAND STRIPING
N.T.S.

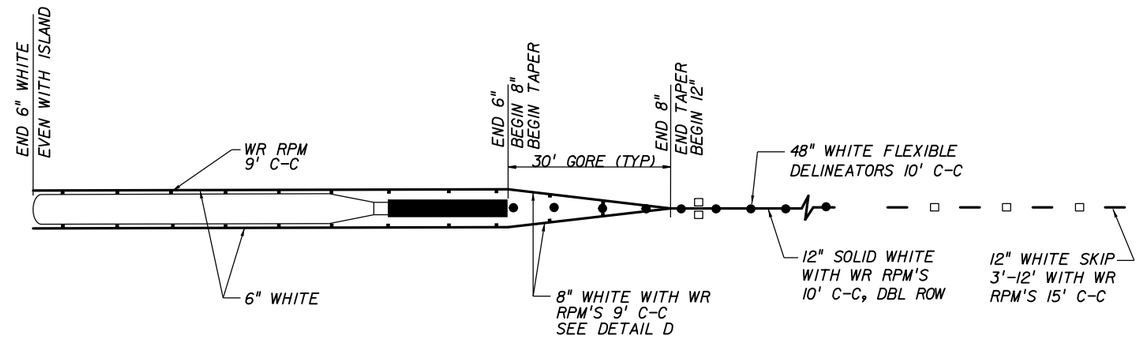

NOTES:

1. RPM'S SHALL BE PLACED AWAY FROM TRAFFIC. SEE DETAILS D AND E

DETAIL F - RAMP PLAZA
TYPICAL 3' ISLAND STRIPING
WITH DEDICATED
EPASS LANE
N.T.S.

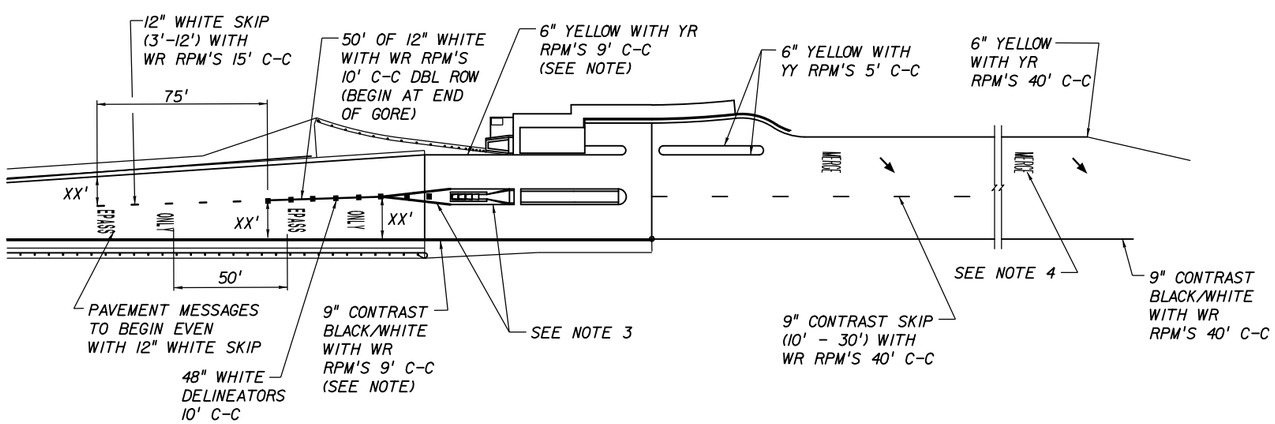

DETAIL C
TYPICAL TWO-LANE RAMP
WITH DEDICATED E-PASS LANE
N.T.S.

NOTES:

1. EDGE LINE RPM'S SPACED AT 9' C-C THROUGH LIMITS OF CONC. PLAZA DECK.
2. ENTIRE DELINEATOR BASE SHALL BE ADHERED TO ASPHALT OR CONCRETE PAVEMENT.
3. SEE DETAILS B OR F AS APPLICABLE.
4. NEED FOR SECOND MERGE PAVT. MESSAGE WILL DEPEND ON PROJECT SPECIFIC GEOMETRY.

NOTES TO CONSULTANT:

1. RAMP/PLAZA CONFIGURATION SHOWN IN DETAIL C IS FOR EXAMPLE PURPOSES ONLY. DETAIL TO BE REVISED USING PROJECT SPECIFIC GEOMETRICS.
2. SIZE OF PARKING CHANNELIZATION TO BE GOVERNED BY THE RAMP GEOMETRY. CONSULTANT TO PROVIDE ALL APPLICABLE CONSTRUCTION INFORMATION.
3. PROVIDE DIMENSIONS (XX') FOR SPECIFIC PROJECT.
4. DELETE BOX WITH NOTES PRIOR TO INCLUDING SHEET IN PLANS.

REVISIONS

DATE	BY	DESCRIPTION	DATE	BY	DESCRIPTION

CENTRAL FLORIDA EXPRESSWAY AUTHORITY

MAINLINE AND RAMP TOLL PLAZA PAVEMENT MARKING DETAILS

PROJECT	SHEET NO.
STANDARDS	71

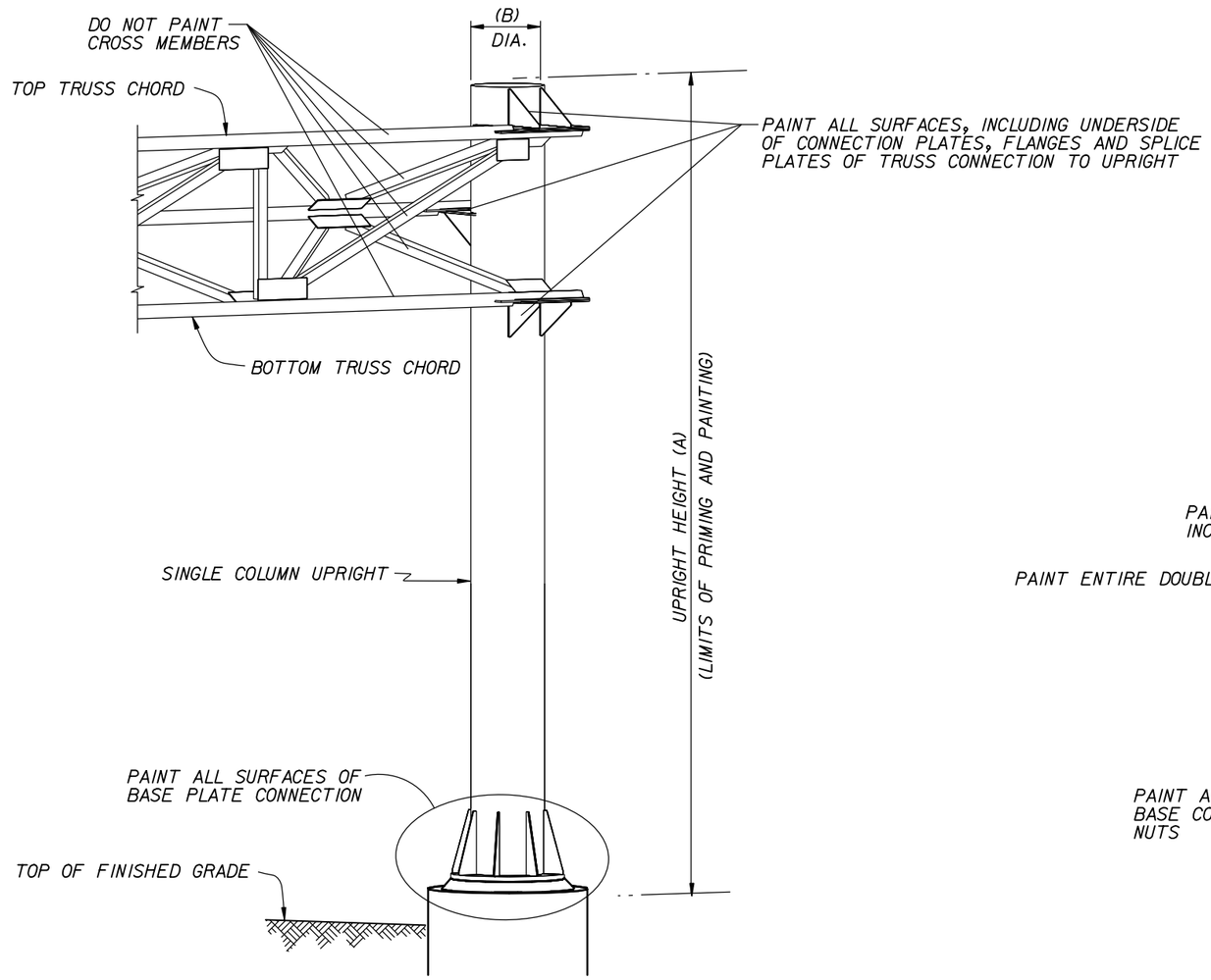

SINGLE COLUMN SIGN UPRIGHT DETAIL
N.T.S.

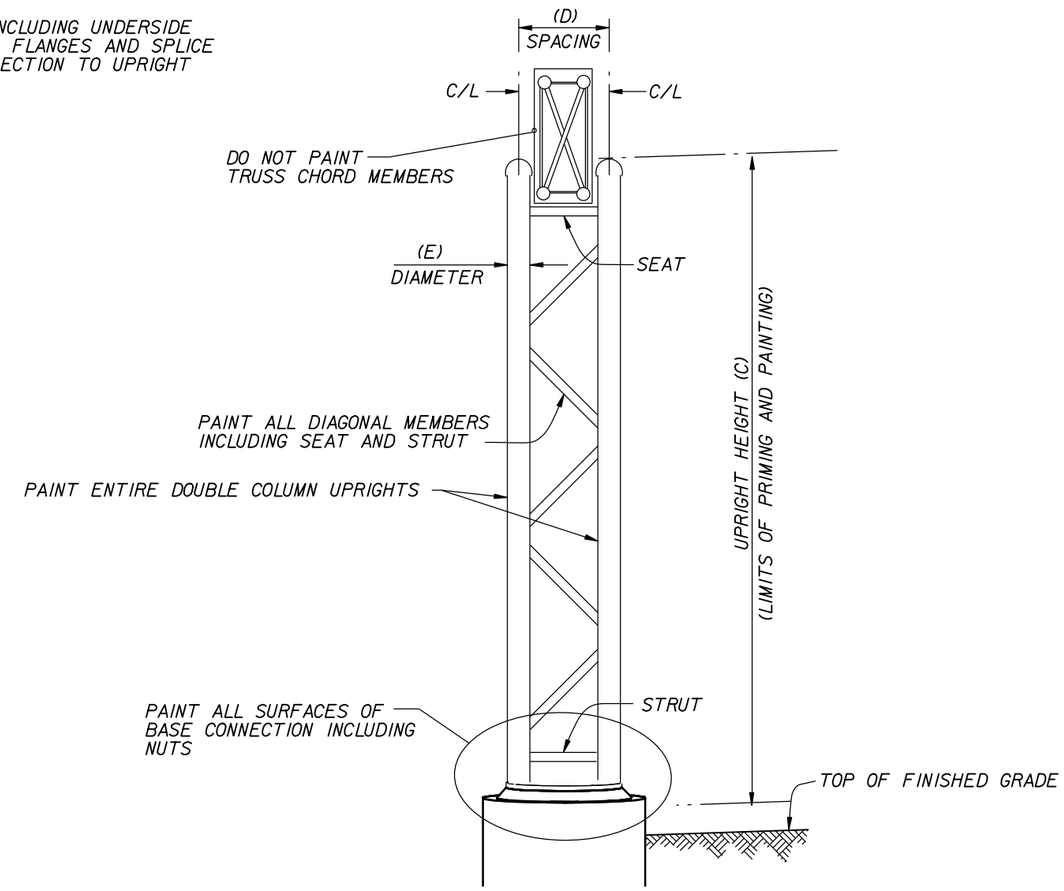

DOUBLE COLUMN SIGN UPRIGHT DETAIL
N.T.S.

NOTES TO CONSULTANT:

1. CONSULTANT SHALL DETERMINE ALL DATA IN TABLE OF VARIABLES IF NOT PROVIDED IN DESIGN OR SHOP DRAWINGS. DATA SHOWN IS FOR EXAMPLE PURPOSES ONLY.
2. NUMBER OF DIAGONALS SHOWN IN DOUBLE COLUMN UPRIGHT DETAIL FOR GRAPHIC PURPOSES ONLY.
3. DELETE THIS BOX WITH NOTES PRIOR TO INCLUDING SHEET IN PLANS.

TABLE OF UPRIGHT PAINTING VARIABLES

STRUCTURE NUMBER	STATION	STRUCTURE TYPE	SINGLE COLUMN UPRIGHT				DOUBLE COLUMN UPRIGHT										NO. UPRIGHTS PER STR.
			HEIGHT (A)		DIAMETER (B)		HEIGHT (C)		SPACING (D)		DIAMETER (E)		DIAGONALS				
													NO.		DIA.		
			LT	RT	LT	RT	LT	RT	LT	RT	LT	RT	LT	RT	LT	RT	
OC-1	3+00	CANTILEVER		31'-4"		24"											1
OT-3	11+00	SPAN TRUSS	38'-1 7/8"	37'-1 3/4"	36"	36"											2
EXISTING	19+00	SPAN TRUSS					26'-9"	27'-6"	5'-9"	5'-9"	14"	14"	6	7	4.5"	4.5"	2

REVISIONS

DATE	BY	DESCRIPTION	DATE	BY	DESCRIPTION

CENTRAL FLORIDA EXPRESSWAY AUTHORITY

SIGN UPRIGHT PAINTING

PROJECT	SHEET NO.
STANDARDS	72

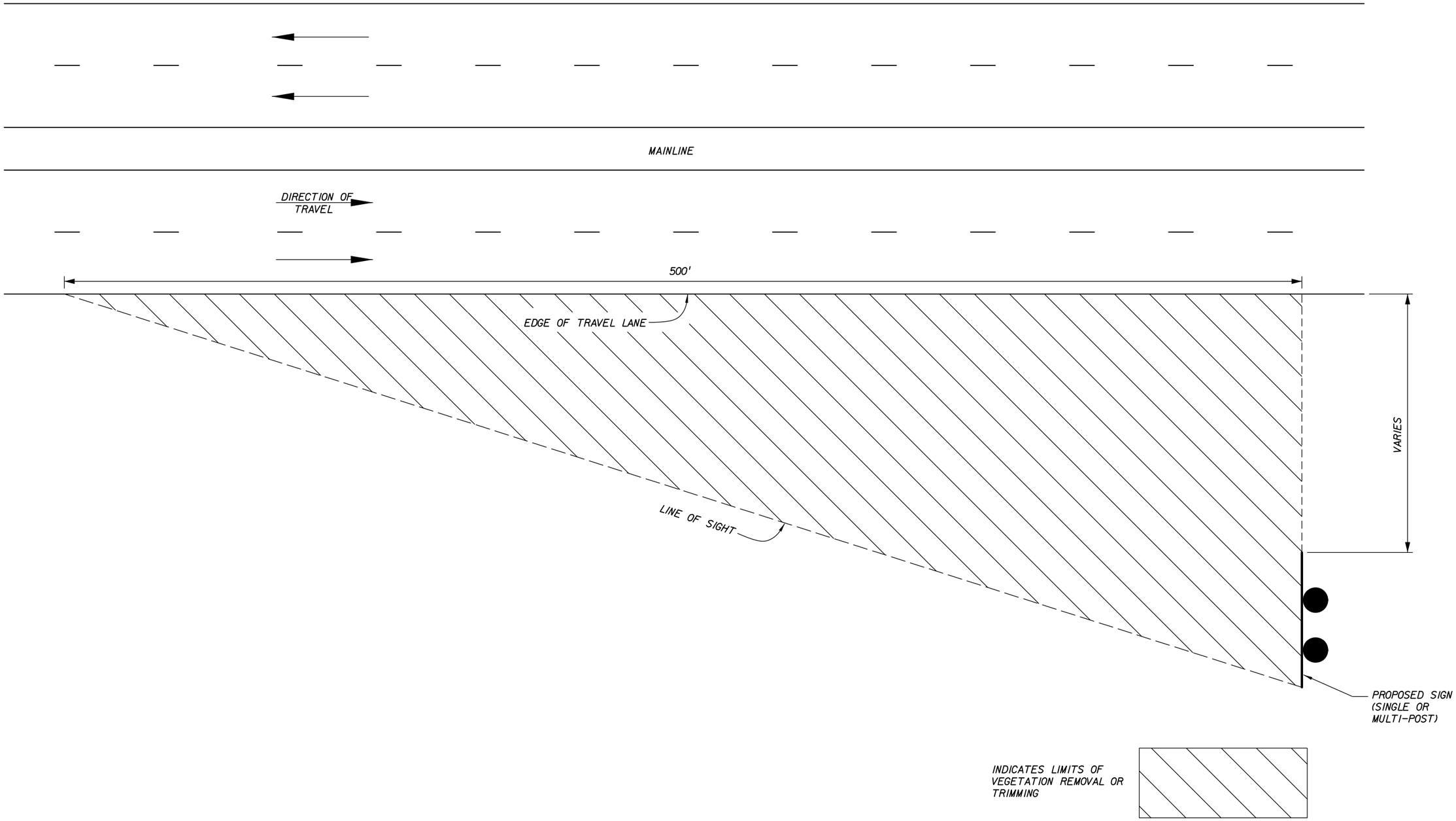

USER: STOD3416 10/23/2014 11:19:01 AM T:\Cadd\CFXway Standards 2014\A6-03.dgn

REVISIONS					
DATE	BY	DESCRIPTION	DATE	BY	DESCRIPTION

CENTRAL FLORIDA EXPRESSWAY AUTHORITY

LINE OF SIGHT FOR USE ON MAINLINE

PROJECT	SHEET NO.
STANDARDS	73

LEGEND:

MH = SIGN MOUNTING HEIGHT

MH_A = MOUNTING HEIGHT ABOVE DRIVER LOCATION

MH_B = MOUNTING HEIGHT BELOW DRIVER LOCATION

SW = SHOULDER WIDTH

WW = WALL WIDTH

WH = WALL HEIGHT *

O = SIGN OFFSET FROM BACK OF WALL

W = SIGN PANEL WIDTH

H = SIGN PANEL HEIGHT

EOT = EDGE OF TRAVELWAY

$$MH_A = \frac{(6+SW+O+W)\ (WH-3.5)}{6+SW} + 3.5'$$

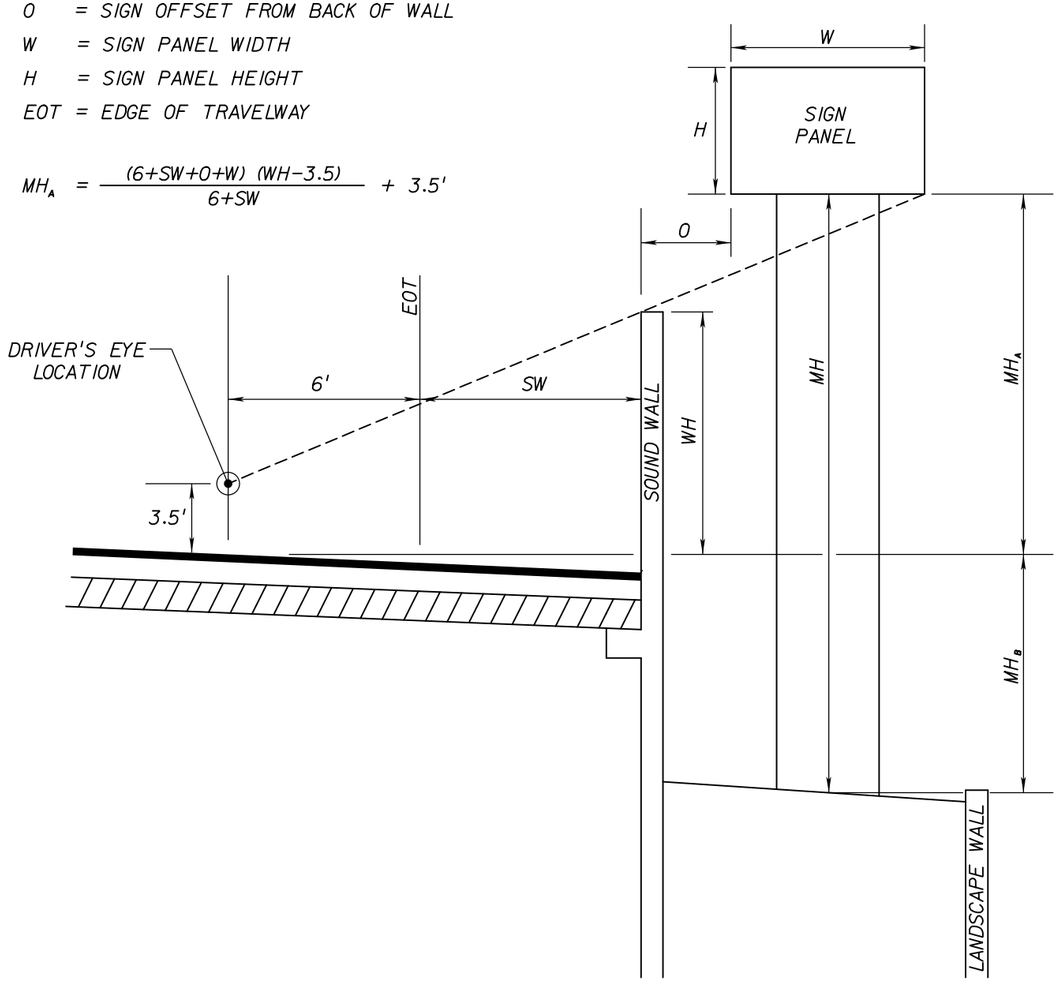

DETAIL A
PROVIDES VISIBILITY 800' IN ADVANCE OF SIGN
N.T.S

LEGEND:

MH = SIGN MOUNTING HEIGHT

MH_A = MOUNTING HEIGHT ABOVE DRIVER LOCATION

SW = SHOULDER WIDTH

WW = WALL WIDTH

WH = WALL HEIGHT *

O = SIGN OFFSET FROM BACK OF WALL

W = SIGN PANEL WIDTH (5' MAX)

H = SIGN PANEL HEIGHT (5' MAX)

EOT = EDGE OF TRAVELWAY

$$MH_A = \frac{(6+SW+WW+O+W)\ (WH-3.5)}{6+SW} + 3.5'$$

* USE GREATEST WALL HEIGHT WITHIN SIGN SITE DISTANCE

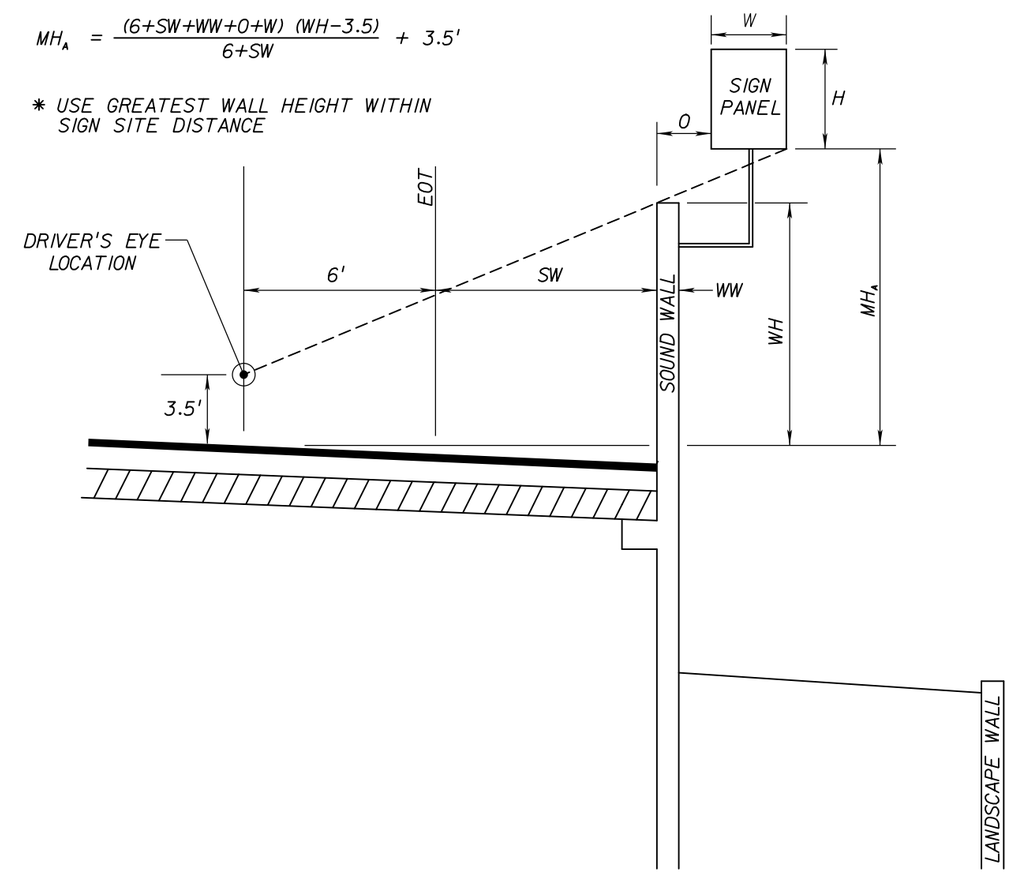

DETAIL B
PROVIDES VISIBILITY 500' IN ADVANCE OF SIGN
N.T.S

NOTES TO CONSULTANT:

1. DETAILS A AND B ARE ONLY FOR USE THROUGH ROADWAY SECTIONS HAVING A CONSTANT GRADE AND NO CREST VERTICAL CURVES.
2. DETAILS A AND B ARE SUGGESTED METHODS ONLY. THE EOR IS FULLY RESPONSIBLE FOR PROVIDING HEIGHTS SUFFICIENT FOR CLEAR PANEL VISIBILITY IN ALL GEOMETRIC CONDITIONS.
3. IN CASE OF VERTICAL CREST CURVES, ENGINEER MUST VERIFY SIGHT LINES BASED ON LENGTH OF CURVE AND DIFFERENCE IN GRADES.

REVISIONS

DATE	BY	DESCRIPTION	DATE	BY	DESCRIPTION

CENTRAL FLORIDA EXPRESSWAY AUTHORITY

METHOD FOR DETERMINING SIGN HEIGHT BEHIND WALLS

PROJECT	SHEET NO.
STANDARDS	74

GENERAL NOTES

1. THE CONTRACTOR SHALL PROVIDE A SPARE CONDUIT AT ALL ROADWAY PAVEMENT CROSSINGS AND CAP BOTH ENDS.

2. PRIOR TO ANY EQUIPMENT ORDER, THE CONTRACTOR SHALL SUBMIT FOR APPROVAL EQUIPMENT SPECIFICATION OR DESIGN DATA FOR ALL MATERIAL PROPOSED FOR THE PROJECT. THESE MUST SPECIFICALLY INCLUDE:
   A) LUMINAIRE PHOTOMETRICS
   B) LOAD CENTER EQUIPMENT

   SEVEN (7) COPIES OF SHOP DRAWINGS AND DESIGN DATA FOR HIGHWAY LIGHTING EQUIPMENT SHALL BE SUBMITTED TO THE ENGINEER OF RECORD AND A COPY OF THE TRANSMITTAL LETTER SHALL BE RECEIVED BY THE RESIDENT ENGINEER IN CHARGE OF THE PROJECT. ALLOW A TWO WEEK TURN-AROUND FOR SHOP DRAWING REVIEWS.

3. UTILITY OWNERS:

   CENTRAL FLORIDA EXPRESSWAY AUTHORITY FIBER OPTIC NETWORK
   PAT COLLINS, CFX
   4974 ORL TOWER RD
   ORLANDO, FL 32807
   (407) 690-5056

   CONSULTANT TO DETERMINE APPROPRIATE UTILITY CONTACTS AND INCLUDE.

   SUNSHINE 811
   1-800-638-4097

4. THE LOCATIONS OF EXISTING UTILITIES, AS SHOWN ON THESE PLANS, ARE APPROXIMATE AND BASED ON THE INFORMATION FURNISHED TO THE ENGINEER BY THE UTILITY OWNER(S) AND ARE SHOWN AS NOTICE TO THE CONTRACTOR THAT UNDERGROUND UTILITIES EXIST. THE CONTRACTOR SHALL NOTIFY THE UTILITY COMPANY OWNER(S) FOR LOCATION AND STAKING OF UNDERGROUND FACILITIES BEFORE EXCAVATING.

5. FLORIDA STATUTE 553.851 (2000) REQUIRES THAT BEFORE EXCAVATING, NOTICE BE GIVEN TO THE UTILITY OWNER A MINIMUM OF TWO (2) DAYS AND A MAXIMUM OF FIVE (5) DAYS, EXCLUDING SATURDAY, SUNDAY AND LEGAL HOLIDAYS. NOT ALL UTILITY COMPANIES ARE MEMBERS OF 'SUNSHINE 811' 1-800-638-4097.

6. THE LOCATIONS OF THE CONDUCTORS, CONDUITS, JUNCTION BOXES AND SERVICE POLES ARE DIAGRAMMATIC ONLY AND MAY BE SHIFTED BY THE ENGINEER TO ACCOMADATE LOCAL CONDITIONS AND EXISTING UTILITY LOCATIONS.

7. ALL ELECTRICAL WORK SHALL MEET ALL REQUIREMENTS OF THE LATEST EDITIONS OF THE NATIONAL ELECTRICAL CODE, THE NATIONAL ELECTRICAL SAFETY CODE AND THE STATE OF FLORIDA D.O.T. STANDARD SPECIFICATIONS FOR ROAD AND BRIDGE CONSTRUCTION. ALL COMPONENTS SHALL BE PROPERLY GROUNDED AND BONDED PER N.E.C. REQUIREMENTS.

8. INSTALL LIGHTNING ARRESTORS, PROPERLY GROUNDED, IN POWER (SECONDARY) ENTRANCES.

9. THE CONTRACTOR SHALL NOTIFY APPROPRIATE UTILITY OWNER AT LEAST 48 HOURS PRIOR TO ANY INSTALLATION THAT IS WITHIN 10 FEET OF ENERGIZED ELECTRICAL CONDUCTORS. THE UTILITY OWNER SHALL ASSIST THE CONTRACTOR WITH TAKING SAFETY PRECAUTIONS AS NECESSARY. EXTREME CAUTION SHALL BE EXERCISED AT ALL TIMES IN PERFORMANCE OF WORK AROUND THE PRIMARY HIGH VOLTAGE COMPONENTS.

10. PULLING INSTRUCTIONS: CONNECT PULLING DEVICES TO COPPER WIRE AND NOT TO JACKET AND MEET MANUFACTURER'S REQUIREMENTS. USE PULLING COMPOUND PER MANUFACTURER'S REQUIREMENTS. ALL BENDS SHALL NOT BE LESS THAN RECOMMENDED BY N.E.C. OR N.E.S.C. FOR CABLE USED.

11. SIGN ILLUMINATION SHALL BE SIMILAR OR EQUAL TO PHILIPS HADCO LEDGINE LED SIGN LIGHT, MODEL C10735 (A OR BX79 OR 104 WATTS / 480 VOLTS) OR AUTHORITY APPROVED EQUAL. THE C10735 IS A SPECIAL ORDER PRODUCT BASED ON THE HADCO FX SERIES WITH MODIFIED OPTICS. PRODUCT CONTAINS 48 OR 96 LEDS AND SHALL CONFORM TO IES C10735A OR C10735B. SIGN LUMINAIRES SHALL BE PROVIDED WITH DRIVER OR SURGE PROTECTION LOCATED REMOTELY IN REMOTE LED DRIVER BOX. SIGN LUMINAIRES SHALL BE GREY OR SILVER IN COLOR. ILLUMINATION FOR EACH SIGN SHALL BE BETWEEN 15 AND 20 FOOTCANDLES AVERAGE INITIAL WITH A MAXIMUM-TO-MINIMUM UNIFORMITY RATIO OF 6:1 OR LESS.

12. TOP MOUNTED LUMINAIRES SHALL NOT BE ALLOWED ON OVERHEAD SIGN STRUCTURES ALONG ANY PORTION OF THE MAINLINE OR ON RAMPS WITHIN THE CFX JURISDICTION WITHOUT PRIOR AUTHORITY APPROVAL.

13. THE CONTRACTOR SHALL SUBMIT FOR APPROVAL A COMPUTER PRINTOUT FOR EACH SIGN INDICATING THAT THE SELECTED LUMINAIRE MEETS OR EXCEEDS THE ABOVE CRITERIA. THE NUMBER OF LUMINAIRES INDICATED ON INDEX 17505 IS SUPERSEDED BY THE NUMBER OF LUMINAIRES INDICATED IN THE SCHEDULE OF LIGHTED SIGNS.

PAY ITEM NOTES

1. ITEM 715-5-12: SHALL INCLUDE PAYMENT FOR ALL ITEMS NECESSARY FOR A COMPLETE INSTALLATION INCLUDING REMOTE DRIVER BOX AND INSTALLATION. REMOTE DRIVER BOX SHALL INCLUDE LED DRIVER FOR EACH SIGN LIGHT FIXTURE, MAIN DISCONNECT, MAIN BREAKER, POWER DISTRIBUTION BLOCK, LED DRIVER SURGE PROTECTION FOR EACH DRIVER, TVSS, WIRING AND CONDUIT FROM EACH LIGHT FIXTURE TO DRIVER BOX.

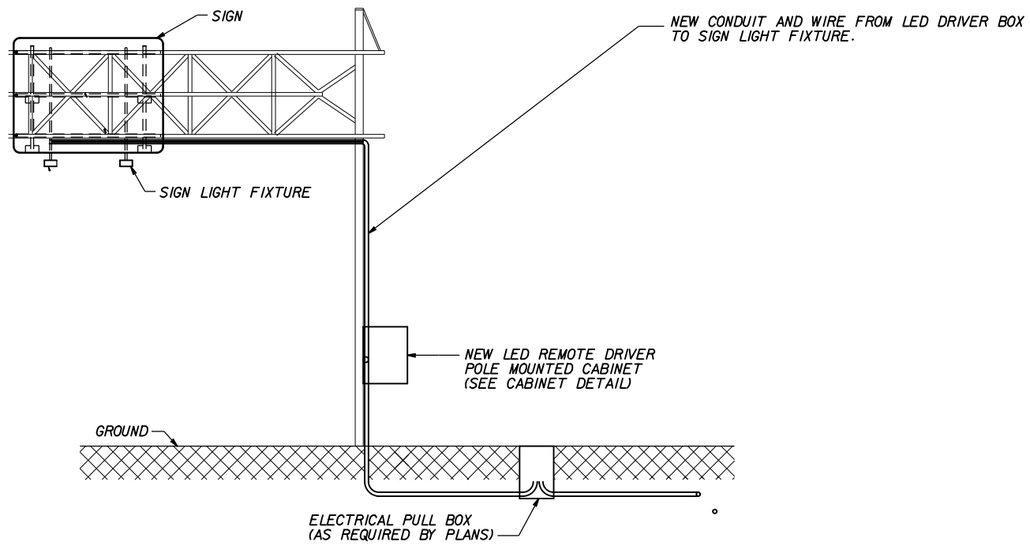

SIGN CONDUIT DIAGRAM

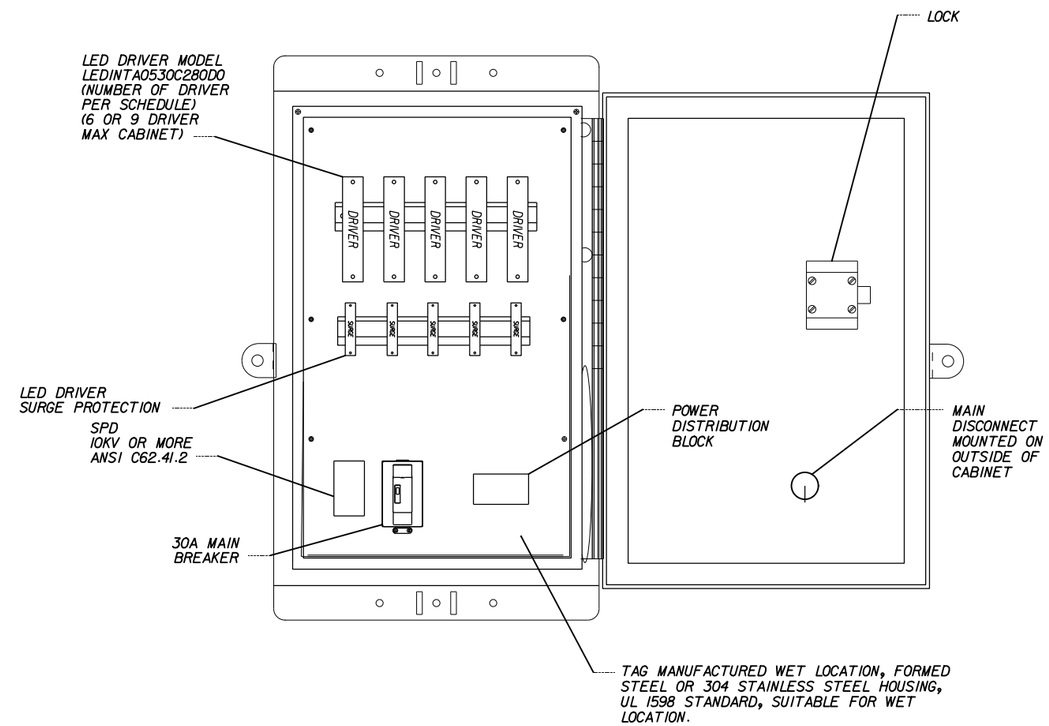

CABINET DETAIL

LED REMOTE DRIVER BOX - POLE MOUNT

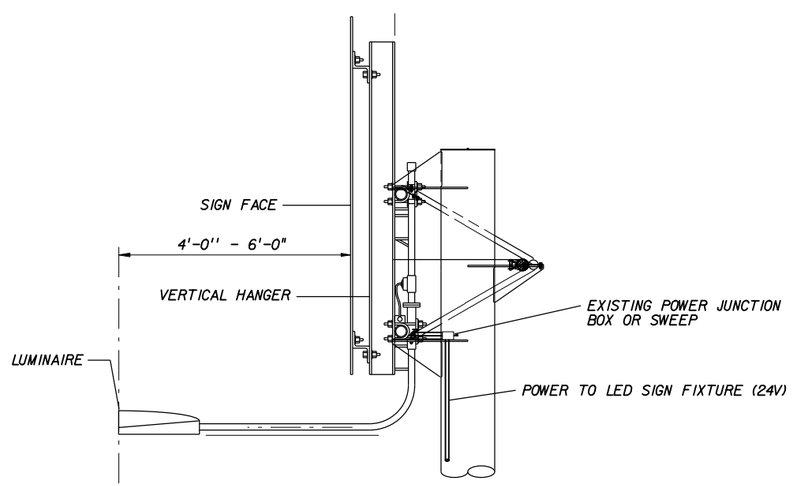

LED SIGN LIGHT FIXTURE ON STRUCTURE (PROFILE)

REVISIONS					
DATE	BY	DESCRIPTION	DATE	BY	DESCRIPTION

CENTRAL FLORIDA EXPRESSWAY AUTHORITY

LED SIGN LIGHTING DETAILS

PROJECT	SHEET NO.
STANDARDS	76