WEKIVA PARKWAY (SR 429)/SR 46 REALIGNMENT PD&E STUDY

TECHNICAL MEMORANDUM:

CONCEPT LEVEL STUDIES FOR THE PROPOSED WEKIVA RIVER BRIDGES

Prepared for:

Orlando-Orange County Expressway Authority

and

Florida Department of Transportation, District Five

Prepared by:

CH2MHILL

August 8, 2011

Wekiva Parkway (SR 429)/SR 46 Realignment PD&E Study

Concept Level Studies for the Proposed Wekiva River Bridges

TO: Joe Berenis, P.E., OOCEA
Brian Stanger, P.E., FDOT District Five
Glenn Pressimone, P.E., OOCEA
Massoud Moradi, P.E., Atkins Global

FROM: Mark Callahan, P.E.

COPIES: Joe Showers, P.E., CH2MHILL
Fred Gottemoeller, P.E., AIA, Bridgescape

DATE: August 8, 2011

This Technical Memorandum documents conceptual engineering studies that were conducted to assist stakeholders in identifying a suitable alternative bridge type for the proposed Wekiva River crossing. The first stage of the study process concluded in mid-May 2011 with the identification of three bridge type alternatives which were considered to best respond to identified project requirements and stakeholder preferences. For information related to process, design requirements, and technical features of those bridge alternatives, please refer to the May 13, 2011 *"Identification of Wekiva River Bridges Study Concepts"* Technical Memorandum that addresses those initial studies. The first stage of the study included two charette sessions which were held on March 2 and 3, 2011 and April 20, 2011 at the Wekiva Falls RV Resort in Sorrento. Meetings summaries from those charettes are provided in ***Appendix A***. This Technical Memorandum documents subsequent studies that focused on refining the three finalist bridge alternatives to the extent that visual features and comparative costs could be identified. The results of these subsequent studies were presented at the third charette session which was held on July 13, 2011 at the same venue in Sorrento. The meeting summary from that charette is also provided in ***Appendix A***.

1.0 Refinements to Finalist Bridge Alternatives

The three finalist bridge type alternatives that were identified and documented in the May 13, 2011 Technical Memorandum were 1) Segmental Concrete Box Girder, 2) Strutted Segmental Concrete Box Girder, and 3) Composite Steel Truss. Subsequent studies included modifications to the project geometrics and overall layout that applied to all three alternatives. Those changes included the following:

- Overall bridge lengths of all three alternatives were increased from approximately 1,500 feet between abutments shown in the previous studies to approximately 1,780 feet. The abutments at the west end of the bridges were moved further to the west. This change was made to further accommodate the wildlife crossing on the west bank of the Wekiva River and adjacent area.

- The mainline and service road profile grades were adjusted downward to reduce bridge contrast against the tree line for aesthetic purposes and to provide for improved access to properties accessed by the existing Wekiva River Road intersection. This resulted in a slightly lower level crossing of the river relative to the initial study profiles.

In addition to these geometric modifications, refinements were made to two of the bridge alternatives. These refinements are discussed in the following sections:

1.1 Segmental Concrete Box Girder

The 1,780-foot long segmental scheme shown on drawings in ***Appendix B (Figure 1)*** has a main span unit arrangement of 180 feet - 300 feet -180 feet. An 80 foot long approach span connects the main span unit of each bridge with the East Abutment, and seven 140 foot spans connect with the West Abutment.

The main span unit for each bridge is precast segmental box girders with depths that vary between 8 and 16 feet. Two cell box girders are shown based on shear lag considerations associated with the 63 foot maximum deck width. A more detailed investigation on the applicability of potentially more economical single cell box girders is recommended in the event that the segmental box girder main span structure is selected for implementation.

One modification relative to the previous schemes was the use of constant depth precast girders for the approach spans. The approach spans are relatively remote from view by recreational river users. The lack of site constraints that limit applications of this bridge type and the lack of constraints to use of shorter spans with lengths that are more consistent with those used on typical local projects make this bridge type attractive. In addition, the square footage construction cost and schedule for precast girders on the west approaches is considered to be less than that for precast segmental approach spans. It is recognized that there may be economy through use of precast segmental superstructures for the entire bridge length. **For that reason, a more detailed analysis of approach span structure types is recommended in the event that the segmental box girder main span structure is selected for implementation.**

Twin column piers support integral cap beams at all piers supporting the segmental box girder spans, and the pier faces are tapered in both the longitudinal and transverse directions, as shown on drawings in ***Appendix B (Figure 1A)***. Twin column piers with "drop" cap beams beneath the superstructure support the multiple prestressed concrete girder lines as shown in ***Appendix B (Figure 4)***.

Construction considerations associated with the main span segmental box girder unit are essentially the same as discussed in the May 13, 2011 Technical Memorandum. Cantilever erection over the Wekiva River from the piers flanking the river banks would be the most likely method of main span construction. Given the limited length of the segmental unit, it is likely that a ground based crane would be used to erect the superstructure. Erection of the prestressed concrete approach span girders would use conventional equipment such as crawler cranes.

1.2. Strutted Segmental Concrete Box Girder

The 1,780-foot long segmental scheme shown on drawings in ***Appendix B (Figure 2)*** has a main span unit arrangement of 180 feet - 300 feet -180 feet. Similar to the segmental box

girder scheme, an 80 foot long approach span connects the main span unit of each bridge with the East Abutment, and seven 140 foot spans connect with the West Abutment.

The primary difference between this scheme and segmental box girder is the cross sectional configuration. The proposed section has a single cell precast segmental box girder with a depth that varies between 8 and 16 feet, and relatively wide overhangs. Inclined struts support the outer portions of the deck slab overhangs and transfer loads to the lower portion of the box girder webs. The current scheme is more articulated that the previous strutted box girder scheme shown in the May 13, 2011 Technical Memorandum since the struts are inclined in both the transverse and longitudinal directions, and are paired in a "V" arrangement for each precast segment. This configuration provides for more visual interest on the girder fascia and a redundant load path to maintain serviceability in the event that damage occurs to one strut in each "V" pair.

It should be stressed that while there do not appear to be any fundamental barriers to the application of this technology, this bridge type is prototypical for the U.S. Additional study and design would be required to confirm assumptions in the event that this bridge type is selected for implementation.

Similar to the segmental box girder scheme, it is proposed to use constant depth precast girders for the approach spans.

Twin column piers support integral cap beams at all piers supporting the strutted box girder main span unit as shown on the drawings in ***Appendix B (Figure 2A)***. The pier faces are tapered in both the longitudinal and transverse directions. Twin column piers with "drop" cap beams beneath the superstructure support the multiple prestressed concrete girder lines as shown in ***Appendix B (Figure 4)***.

Construction considerations associated with this bridge alternative are discussed in the May 13, 2011 Technical Memorandum. Overall, this scheme is very similar to the segmental box girder scheme, and it is anticipated that similar equipment would be used.

1.3 Composite Steel Truss Bridge

The 1,757-foot long segmental scheme shown on drawings in ***Appendix B (Figure 3)*** has a main span unit arrangement of 214 feet -300 feet -214 feet. Similar to the other two schemes, there is a 128.7 foot long approach span connecting the main span unit of each bridge with the East Abutment, and seven 128.7 foot prestressed concrete girder spans connect with the West Abutment.

Twin single column piers support the main span unit superstructure. The pier faces are tapered in both the longitudinal and transverse directions as shown on the drawings in ***Appendix B (Figure 3A)***. As with the other two bridge schemes, twin column piers with "drop" cap beams beneath the superstructure support the multiple prestressed concrete girder lines as shown in ***Appendix B (Figure 4)***.

The primary difference between this scheme and the other two concerns the composite steel truss main span unit. A tubular steel truss superstructure has advantages in terms of visual transparency relative to a deep concrete box girder. Additional maintenance and inspection costs are anticipated for this bridge type compared to the precast concrete bridge schemes. There are also design, fabrication, and erection issues that are discussed in more detail in following sections of this memo.

The prior version of this scheme depicted in the May 13, 2011 Technical Memorandum had a variable depth superstructure with a depth at the piers on the order of 32 feet, with a midspan depth on the order of 15 feet. The current scheme has a constant depth of 24 feet, which results in a repetitive structure geometry that simplifies fabrication and detailing.

Another difference from the scheme depicted in the May 13, 2011 Technical Memorandum is the truss cross section. The prior scheme had truss planes that were vertical, and those truss planes were connected with cross frames to provide rigidity and stability. These secondary framing systems can be visually "busy" and somewhat in contrast with the desire to create a superstructure with a high degree of visual transparency. The scheme depicted in the drawings in ***Appendix B*** has trusses in inclined planes, resulting in a nearly triangular cross section.

Another feature of the cross section arrangement deals with redundant behavior of trusses. The proposed scheme has twin tubular steel bottom chord members that are separated by a relatively narrow gap. While additional study is required to confirm the anticipated behavior of this arrangement, it may be possible to develop a cross section that could resist damage or failure of one chord member while providing sufficient strength in the remaining member. It may also be possible to use post-tensioning within the truss chords to provide a load path redundant structural system. **Detailed studies will be required to confirm that this scheme can be implemented in the event that this bridge type is selected for implementation.**

Geometry control during erection is very important for this rigid structure. It is envisioned that the main span unit would be erected on shoring towers which could support a portion or all of the span steel weight prior to assembly of the entire truss. It is also envisioned that the main span would be erected either concurrently with the side span erection or subsequent to completion of the side spans. Alternatively, given the truss depth and rigidity, it may be possible to erect the superstructure in the side span areas and launch it outward over the river.

Given the structure depth, weight and lack of water transport to the site, it is very likely that the structure may be shop fabricated in sub-assemblies that are trucked to the site and field welded into complete modules. The contractor may elect to use an on-site welding and fabrication shop for a substantial portion of the work. Field welding is relatively uncommon in U.S. bridge construction, and it is anticipated that project specific quality management practices and a higher standard of inspection would be required with this scheme.

Deck casting the long deck spans and cantilevers will require deck forming system that are atypical when compared to those used for conventional bridges with more closely spaced supports and shorter overhangs. Traveling forms, similar to those used to construct cast in place segmental box girders, may be required to cast the deck slab.

2.0 Aesthetic Considerations

Visualizations were developed for the three alternatives in the Wekiva River crossing location setting. Those renderings, shown both with and without a safety/debris fence, are included in ***Appendix C***. There were no significant modifications to the Segmental Concrete Box Girder arrangement depicted in the May 13, 2011 Technical Memorandum.

The most significant modification to the Strutted Segmental Concrete Box Girder that influenced its visual character was the use of a pair of V struts as opposed to the single strut scheme shown in the previous Technical Memorandum. The current arrangement results in a textured screen when viewed in front of the girder fascia backdrop. The form and scale of the struts are visually compatible with trees in the forest backdrop, and diminish the visual impact of the massive concrete girder fascia. The wide deck overhangs place the girder fascia in shade for most of the day, and the tone of the darker surface becomes more compatible with the woodland backdrop.

The most significant modifications to the Composite Steel Truss Bridge that influenced its visual character were the constant depth superstructure and the triangular cross sectional arrangement. The deeper truss results in a more open spatial relationship of mass to volume and increased transparency. As a result, the truss filters more than obscures the forest backdrop. This transparency is enhanced by the triangular cross sectional arrangement which reduces the need for intermediate cross frames to stabilize the truss cross section. Fewer components results in a simplified geometric form with increased transparency.

3.0 Cost Estimates for Finalist Bridge Alternatives

Concept level cost estimates were developed for each of the three bridge type alternatives. Details on those estimates and the overall methodology that was utilized are included in ***Appendix D***.

It should be stressed that, given the current level of project development, these estimates are not based on detailed engineering designs. Also, it is likely that the costs may change between now and the time that bids are opened due to a number of variables. For that reason, extreme caution should be exercised in making decisions solely based upon this cost estimate information. It should also be noted that cost ranges, which define the limits of probable construction costs, have been defined for each alternative.

Concept level cost estimates for the three bridge type alternatives depicted in the drawings contained in ***Appendix B*** are:

Segmental Concrete Box Girder:

Low End of Range: $47.1 Million. High End of Range: $76.5 Million

Concept Level Estimate: $58.9 Million

Strutted Segmental Concrete Box Girder:

Low End of Range: $52.6 Million. High End of Range: $85.5 Million

Concept Level Estimate: $65.8 Million

Composite Steel Truss Bridge:

Low End of Range: $65.6 Million. High End of Range: $106.6 Million

Concept Level Estimate: $81.9 Million

4.0 Bridge Type Alternative Selected by Stakeholders

At the third (and final) charette meeting with stakeholders on July 13, 2011, information on and renderings of the three bridges type alternatives as discussed in Sections 1 and 2 of this Technical Memorandum were presented. By a substantial margin, the preference of the stakeholders at the charette meeting was the Segmental Concrete Box Girder bridge type. Many indicated they would like to see some type of treatment and/or color applied to the bridge fascia and piers. However, the National Park Service representatives said they had no opinion yet on a preferred bridge type or were neutral. They suggested that the advisory preference for the Segmental Concrete Box Girder bridge type could be noted, but the other bridge type alternatives should not be dismissed yet given that several variables remained dynamic and more evaluations were needed before a decision was possible. It was agreed that the venue for continued coordination on the Wekiva River bridges will be the Wekiva River System Advisory Management Committee.

Appendix A
Summaries of Charette Sessions

- Charette No. 1 – March 2 and 3, 2011
- Charette No. 2 – April 20, 2011
- Charette No. 3 – July 13, 2011

Conceptual Design of Proposed Wekiva River Bridges

Summary Notes
Charette No. 1 (Meeting No. 1)
March 2, 2011

The meeting was held in the Wekiva Falls RV Resort Clubhouse in Sorrento, FL and began at approximately 1 p.m. All attendees were asked to sign-in. Agenda packets and name tags were provided to all attendees.

Welcome and Introductions

Mr. Snyder welcomed everyone and asked that all attendees introduce themselves. A copy of the sign-in sheet is attached.

Agenda

A PowerPoint presentation was used to as a guide to the meeting agenda items and discussion topics. Mr. Gottemoeller, the charette facilitator, indicated that the site visit on the river to the existing bridge had to be cancelled due to low water levels that would not allow passage of the pontoon boats. A copy of the agenda is attached.

Regulatory Stakeholders

It was discussed that the regulatory stakeholders in the process are the National Park Service (NPS), the Wekiva River System Advisory Management Committee (WRSAMC), and the Federal Highway Administration (FHWA).

Why Are We Here?

It was discussed that the Wekiva River is a federally-designated Wild & Scenic River which triggers provisions of Section 7(a) of the Wild & Scenic Rivers (W&SR) Act and requirements of Section 4(f) of the U.S. Department of Transportation (USDOT) Act.

Section 4(f) and Section 7(a) Requirements

Mr. Hadley of FHWA discussed the requirements of Section 4(f) of the USDOT Act and Dr. Duncan of NPS outlined the requirements of Section 7(a) of the W&SR Act. A summary of those respective requirements was provided to attendees.

What is the Primary Objective?

It was discussed that the primary objective of the charette is to develop a consensus on a design concept for the proposed new bridges over the Wekiva River to be tested against Section 4(f) and Section 7(a).

How Will the Charette Work?

A flow chart was provided to attendees that illustrated the process for identifying alternatives, further developing and evaluating them, and ultimately determining the Preferred Alternative for the bridges. It was discussed that a total of three charette meetings are proposed over the next three months.

Proposed Build Alternative

Graphics and information on the proposed build alternative for the Wekiva Parkway (SR 429) Mainline and Service Road bridges, as developed in the PD&E Study, were reviewed and discussed.

Review of Bridge Photos

Since the site visit had to be cancelled, approximately 85 photos of the existing SR 46 bridge over the Wekiva River were reviewed and discussed. The photos were taken from various perspectives on the river. Ms. Shelley asked where exactly can you see the bridge from – how far away? Mr. Callahan stated that information would be determined before the next charette meeting. During review of the bridge photos, Mr. Gottemoeller gave a brief explanation of bridge terminology, including piers, girders, depth of girder, span, clear span, deck, parapet, pier caps, foundation (piles), approaches, and abutments (end of bridges). Mr. Thomson said the texture on the underside of the bridge is important and referenced the trail bridge over I-4 south of Sanford. A discussion followed on light penetration under the proposed bridges and the number of structures proposed for the mainline and service road. Dr. Duncan said he was concerned about the impact of the new bridges on the island north of the SR 46 bridge. It was discussed that the perspective or view on the river from north of the bridge needs to be determined. Ms. Roberts, who lives on the river just north of the bridge, offered to let the Project Team take photos from her property. Mr. Shanklin indicated that the existing vegetation at the site needs to be taken into consideration for the new bridges.

Develop Vision Statement

A form was provided to each attendee to be filled-out with goals/aspirations and desired characteristics for the proposed bridges. Mr. Gottemoeller said the forms would be collected tomorrow and the responses collated for use in developing the vision statement. A form with proposed evaluation criteria for the bridge alternatives was also provided to attendees.

Initial Bridge Design Concepts

Mr. Gottemoeller said at tomorrow's meeting the goal would be to identify 4 to 5 bridge concepts for technical development before the next charette. He said the attendees would be separated into working groups to develop ideas and concept drawings, followed by presentation and discussion of those concepts.

Discuss Date for Charette No. 2

It was discussed that April 20, 2011 at 1 pm. is the candidate date/time for next charette meeting. Attendees were requested to check their calendars before tomorrow's meeting to determine if April 20th is a mutually acceptable date for Charette No. 2.

Adjournment

The attendees were reminded that tomorrow's meeting begins at 9 a.m. The meeting adjourned at approximately 5 p.m.

Wekiva Parkway (S.R. 429) Project Development and Environment Study
Charette Meeting on Conceptual Design of Proposed Wekiva River Bridges - March 2, 2011
Sign-In Sheet

Name	Please Initial	Agency or Organization	Mailing Address	E-Mail Address	Phone Number
Anderson, Linda	LKA	Federal Highway Administration	545 John Knox Road, Suite 200 Tallahassee, Florida 32303	Linda.K.Anderson@fhwa.dot.gov	
Brabham, Mary	MB	St. Johns River Water Management District	975 Keller Road Altamonte Springs, Florida 32714	mbrabham@sjrwmd.com	407-659-4829
Brummer, Fred, Orange County Commissioner		ECFRPC Representative	C201 South Rosalind Avenue Orlando, Florida 32802	district2@ocfl.net	407-836-7350
Callahan, Mark		CH2M HILL	225 East Robinson Street, Suite 505 Orlando, Florida 32801-4321	mark.callahan@ch2m.com	407-650-2150
Campione, Commissioner Leslie	LSC	Lake County Board of County Commissioners	P.O. Box 7800 Tavres, Florida 32778-7800	lcampione@lakecountyfl.gov	352-343-9850
Christman, Nancy	NC	St. Johns River Water Management District	975 Keller Road Altamonte Springs, Florida 32714	nchristman@sjrwmd.com	407-659-4835
Diceglie, Jay		City of Altamonte Springs Public Works Administration	225 Newburyport Avenue Altamonte Springs, Florida 32701	Jdiceglie@altamonte.org	
Doubek-Racine, Jaime	J.D.R.	National Park Service	5342 Clark Road, PMB #123 Sarasota, Florida 34233-3227	jaime_doubek-racine@nps.gov	941-685-5912
Duncan, Dr. Jeff	D	National Park Service	175 Hamm Road, Suite C Chattanooga, Tennessee 37405	jeff_duncan@nps.gov	423-987-6127
Gottemoeller, Fred		Bridgescape	9175 Guilford Road # 214 Columbia, Maryland 21046	fred.gottemoeller@bridgescape.net	301-490-6088
Hadley, George		Federal Highway Administration	545 John Knox Road, Suite 200 Tallahassee, Florida 32303	george.hadley@dot.gov	850-942-9650 877-478-8325
Hodges, Lindsay		Orlando-Orange County Expressway Authority	4974 ORL Tower Road Orlando, Florida 32807	hodgesl@oocea.com	407-316-3800
Jackson, Beth		Orange County Environmental Protection Division	800 Mercy Drive, Suite 4 Orlando, Florida 32808	Beth.Jackson@ocfl.net	407-836-1481
Jackson, Roy		Florida Department of Transportation	605 Suwannee Street Tallahassee, Florida 32399	roy.jackson@dot.state.fl.us	850-414-5323
Jorza, Kathy	KAJ	CH2M HILL	225 East Robinson Street, Suite 505 Orlando, Florida 32801-4321	kathleen.jorza@ch2m.com	407-650-2122
Koffer, Melanie	MK	CH2M HILL	225 East Robinson Street, Suite 505 Orlando, Florida 32801-4321	melanie.koffler@ch2m.com	407-650-2195
Laisure, Debra	DL	Florida Department of Environmental Protection	8300 West State Road 46 Sanford, Florida 32776	Debra.Laisure@dep.state.fl.us	
Lakich, John		Wekiva River Basin State Parks	1800 Wekiwa Circle Apopka, Florida 32712	john.lakich@dep.state.fl.us	407-884-2006
LaSeur, Eileen		CH2M HILL	225 East Robinson Street, Suite 505 Orlando, Florida 32801-4321	eileen.laseur@ch2m.com	407-650-2172
Lewis, Dave		CH2M HILL	225 East Robinson Street, Suite 505 Orlando, Florida 32801-4321	david.lewis2@ch2m.com	407-650-2181
Maikisch, Michelle		Orlando-Orange County Expressway Authority	4974 ORL Tower Road Orlando, Florida 32807	maikischm@oocea.com	407-316-3800

Wekiva Parkway (S.R. 429) Project Development and Environment Study
Charette Meeting on Conceptual Design of Proposed Wekiva River Bridges - March 2, 2011
Sign-In Sheet

Name	Please Initial	Agency or Organization	Mailing Address	E-Mail Address	Phone Number
Maingot, Mayor John C.		City of Longwood	848 Maraval Court Longwood, Florida 32750	jmaingot@longwoodfl.org	407-260-3441
Marshall, Danielle	DM	City of Altamonte Springs Compliance Coordinator	225 Newburyport Avenue Altamonte Springs, Florida 32701	dmarshall@Altamonte.org	407-571-8331
Matthews, Tony		Seminole County Planning Division	1101 East First Street Sanford, Florida 32771	tmatthews@seminolecountyfl.gov	407-665-7936
Moradi, Massoud	MM	PBS&J	482 South Keller Road Orlando, Florida 32810-6101	mmoradi@pbsj.com	407-806-4170
Mulligan, Ann	AM	CH2M HILL	225 East Robinson Street, Suite 505 Orlando, Florida 32801-4321	ann.mulligan@ch2m.com	407-650-2113
Perry, Mike		Lake County Water Authority	107 North Lake Avenue Tavares, Florida 32778		352-343-3777
Prather, Lisa		Florida Department of Environmental Protection	8300 West State Road 46 Sanford, Florida 32776	Lisa.Prather@dep.state.fl.us	
Pressimone, Glenn		Orlando-Orange County Expressway Authority	4974 ORL Tower Road Orlando, Florida 32807	pressimoneg@oocea.com	407-316-3800
Prine, Nancy		Friends of Wekiva River	655 Terrace Boulevard, PO Box 536815 Orlando, Florida 32803	NPLA@aol.com	407-898-9200
Raulerson, Gary		Wekiva River Aquatic Preserve, FDEP	8300 West State Road 46 Sanford, Florida 32776	gary.raulerson@dep.state.fl.us	407-470-9433
Schue, Keith	K.S.	Friends of Wekiva River		ecokeith@yahoo.com keith.schue@yahoo.com	407-470-9433
Shanklin, Ian	IPS	National Park Service	601 Riverfront Drive Omaha, NE 68102-4226	ian_shanklin@nps.gov	402-661-1850
Shelley, Deborah	DRS	Wekiva River Aquatic Preserve, FDEP	8300 West State Road 46 Sanford, Florida 32776	Deborah.Shelley@dep.state.fl.us	407-330-6727
Showers, Joe	JS	CH2M HILL	9191 South Jamaica Street Englewood, Colorado 80112	joseph.showers@ch2m.com	720-286-5275
Shupe, Tom	TS	Florida Fish and Wildlife Conservation Commission	3365 Taylor Creek Road Christmas, Florida 32709	Tom.Shupe@MyFWC.com	407-568-1704
Snyder, Mike		Orlando-Orange County Expressway Authority	4974 ORL Tower Road Orlando, Florida 32807	snyderm@oocea.com	407-316-3800
Stanger, Brian		Florida Department of Transportation	719 South Woodland Boulevard DeLand, Florida 32720	brian.stanger@dot.state.fl.us	386-943-5391
Thomson, Walter	WT	The Nature Conservancy	222 S. Westmonte Drive, Suite 300 Altamonte Springs, Florida 32714	wthomson@tnc.org	407-682-3664 407-387-4847
Welstead, Gregg	WJW	Lake County Conservation & Compliance	315 West Main Street, Suite 520 Tavares , Florida 32778	gwelstead@lakecountyfl.gov	352-343-9106
Vicki Nations	VN	SJRWMD		vnations@sjrwmd.com	407-659-4858
WILSON, MIGHK		METROPLAN ORLANDO	315 E. ROBINSON ST. STE 355 ORLANDO 32801	MWILSON@ METROPLANORLANDO.com	407-481-5672 X318

EXPRESSWAY AUTHORITY

STATE OF FLORIDA DEPARTMENT OF TRANSPORTATION

Wekiva Parkway (S.R. 429) Project Development and Environment Study
Charette Meeting on Conceptual Design of Proposed Wekiva River Bridges - March 2, 2011
Sign-In Sheet

Name	Please Initial	Agency or Organization	Mailing Address	E-Mail Address	Phone Number
Kevin Spencer	KS	Sentinel			
Linda Roberts	LR	Snook Foundation	5224 West SR 46 #102	Linda@snookfoundation.org	407-302-5550
Jason Baumgardner	JB	"	" " Sanford FL 32771	" "	" " "
Lesl					

CONCEPTUAL DESIGN CHARETTE FOR THE WEKIVA RIVER BRIDGES

AGENDA

March 2, 2011

1:00 p.m. – 5:00 p.m.

1. Stakeholder orientation meeting (1 hour, 20 minutes)
   a. Introductions
   b. General orientation to the project and charette process
   c. Review photos of existing S.R. 46 bridge from river perspective

2. Stakeholder site visit to existing S.R. 46 bridge (2 hours)
   a. View the crossing site from various land perspectives
   b. Discuss observations, impacts and important view points

3. Reconvene for additional observations and review of next day's agenda (40 minutes)

4. Adjourn

Conceptual Design of Proposed Wekiva River Bridges

Summary Notes
Charette No. 1 (Meeting No. 2)
March 3, 2011

The meeting was held in the Wekiva Falls RV Resort Clubhouse in Sorrento, FL and began at approximately 9 a.m. All attendees were asked to sign-in. Agenda packets and name tags were provided to all attendees.

Welcome and Introductions

Mr. Snyder welcomed everyone and asked that all attendees introduce themselves. A copy of the sign-in sheet is attached.

Agenda

A PowerPoint presentation was used to as a guide to the meeting agenda items and discussion topics. Mr. Gottemoeller, the charette facilitator, reviewed the agenda items for the meeting. A copy of the agenda is attached.

Confirmation of Charette Process, Objectives and Desired Outcomes

Mr. Gottemoeller reviewed the items from the charette meeting the previous day for those who were unable to attend. Those items included the regulatory stakeholders, Section 4(f) and Section 7(a) requirements, the charette process flow chart, objectives, and graphics of the proposed build alternative. Mr. Lee said he doesn't like the locations of the stormwater ponds NW and SE of the proposed bridges as they would disrupt wildlife movement. It was discussed that these are just placeholder locations pending final drainage design.

Identify Stakeholder Concerns and Aspirations

A form was provided to each attendee to be filled-out with goals/aspirations and desired characteristics for the proposed bridges. Mr. Gottemoeller said the forms would be collected and the responses collated for use in developing the vision statement. A form with proposed evaluation criteria for the bridge alternatives was also provided to attendees.

Identify Key Views and Viewsheds

Mr. Gottemoeller displayed a large, mounted aerial photo of the area surrounding the Wekiva River in the vicinity of the SR 46 bridge. He asked that the attendees identify key views to the bridge site, and he placed red dots at those locations as they were suggested by the attendees. Approximately 15 key views were identified for further evaluation to answer questions like: "How do the views change with the new bridges? Can higher bridges be seen from further away up and down stream? If so, how far away?"

Develop Vision Statement and Evaluation Criteria

Discussion of this agenda item was deferred due to time constraints.

Present Functional Requirements

Legal constraints – the requirements of Section 4(f) of the USDOT Act and Section 7(a) of the W&SR Act were briefly discussed for those who did not attend yesterday's meeting.

Traffic constraints – a graphic depicting the estimated existing traffic and projected 2032 No Build and 2032 Build traffic in the vicinity of the bridges was reviewed and discussed.

Geometrical and related engineering constraints – location, horizontal/vertical controls, structural feasibility, and geotechnical conditions were discussed. A graphic depicting the horizontal and vertical controls for the mainline and service road bridges was reviewed and discussed by Mr. Callahan. Those controls include high pressure gas pipe lines, Section 4(f) state park and forest lands, residential neighborhoods, mainline clearance over crossroads on either side of the river, and the service road tie-in to local roads on either side of the river.

Environmental constraints – the Outstanding Remarkable Values (ORVs) of the Wekiva Wild & Scenic River were discussed, including aesthetics, scenic value, scenery, lighting, noise/acoustics, water quality, and river flow. The need to enhance wildlife habitat connectivity was also discussed. After review of the noise analysis data at the bridge site, Dr. Duncan stated that he would like to see a radius of noise isopleths. Mr. Hadley indicated that noise impacts both humans and animals. It was mentioned that rubberized asphalt may minimize noise.

Conceptual Work to Date

A plan view of the mainline and service road bridges was shown and discussed. The typical sections for the bridges were also shown. The distance needed for clear spanning the river was shown based on a mean high water level of eight feet. The minimum distance is about 270 feet. The profile of the proposed bridges, compared to the existing bridge, was shown on a photo base. The attendees indicated they would like to see the profile lowered for the new bridges. They asked that other concepts be analyzed east and west of the river if that would help lower the profile of the bridges over the river. The attendees also asked that the service road be moved to the south side of the mainline bridges and that the three bridges be separated for light penetration. Mr. Callahan said that analysis would be completed for presentation at the next charette meeting.

Bridge Catalogue

Mr. Gottemoeller presented, reviewed and discussed eight PowerPoint slides of different bridge types. Mr. Lee said he liked the Clearwater bridge; he said it is a clean design. Ms. Shelley said she doesn't think an arch is appropriate for the Wekiva River location.

Develop and Discuss Design Concepts

After a short lunch break, the attendees gathered in six separate groups to develop and sketch bridge concepts over a two hour period. The concepts were then viewed by the entire group and a spokesperson for each group provided details on their particular concept. Those discussion details are summarized below:

Table 1 (Mr. Moradi, spokesperson) – haunched; softened, textured with color; bridge thin as possible; minimize column width; mimic oak tree trunk in piers; river rock texture in concrete mix.

Table 4 (Dr. Smith, spokesperson) – haunched; cypress trunk look to piers; trail below traffic level; pull-off platform for cyclists; softened with texture; curves not straight lines.

Table 5 (Ms. Jackson, spokesperson) – visually make bridge go away; lower bridge profile into tree canopy; support scenic ORV; have colors inside of barriers; use roadway materials that reduce noise; have color and texture on the columns; separate the mainline EB and WB bridges; have open parapets.

Table 7 (Mr. Orlowski, spokesperson) – minimize visual impact; slender, simple façade; piers back (inside) from fascia beam; 3 columns only: 2 for mainline bridge and 1 for service road bridge that are wide at top and slender at bottom.

Table 6 (Ms. Leisure, spokesperson) – similar to bridge in Clearwater shown in presentation; arch below deck; irregular, organic lattice work below deck and on parapets; bark color; different colors on north and south sides of bridge; texturize the concrete to look like stone; above bridge gateway feature for drivers; minimize lighting.

Table 2 (Mr. Schue, spokesperson) – organic, tree-like piers would be least invasive; maintain habitat connectivity; use concrete stain not paint; use rubberized asphalt; lower the profile; 3 structures for light penetration; 1 column for each structure; lattice to conceal traffic on bridge to match columns.

Presentation by NPS

Mr. Shanklin gave a multi-faceted presentation focused on Scenery Conservation Principles.

Discuss Next Charette Meeting Date

It was agreed that Charette No. 2 will be held on April 20, 2011 from 1 p.m. to 5 p.m. The location is to be determined.

Adjournment

The meeting adjourned at approximately 4:15 p.m.

Wekiva Parkway (S.R. 429) Project Development and Environment Study
Charette Meeting on Conceptual Design of Proposed Wekiva River Bridges - March 3, 2011
Sign-In Sheet

Name	Please Initial	Agency or Organization	Mailing Address	E-Mail Address	Phone Number
Anderson, Linda	LKA	Federal Highway Administration	545 John Knox Road, Suite 200 Tallahassee, Florida 32303	Linda.K.Anderson@fhwa.dot.gov	
Brabham, Mary	MB	St. Johns River Water Management District	975 Keller Road Altamonte Springs, Florida 32714	mbrabham@sjrwmd.com	407-659-4829
Brummer, Fred, Orange County Commissioner		ECFRPC Representative	C201 South Rosalind Avenue Orlando, Florida 32802	district2@ocfl.net	407-836-7350
Christman, Nance		St. Johns River Water Management District	975 Keller Road Altamonte Springs, Florida 32714	nchristman@sjrwmd.com	407-659-4835
Callahan, Mark		CH2M HILL	225 East Robinson Street, Suite 505 Orlando, Florida 32801-4321	mark.callahan@ch2m.com	407-650-2150
Campione, Commissioner Leslie		Lake County Board of County Commissioners	P.O. Box 7800 Tavres, Florida 32778-7800	lcampione@lakecountyfl.gov	352-343-9850
Christman, Nancy		St. Johns River Water Management District	975 Keller Road Altamonte Springs, Florida 32714	nchristman@sjrwmd.com	407-659-4835
Diceglie, Jay		City of Altamonte Springs Public Works Administration	225 Newburyport Avenue Altamonte Springs, Florida 32701	Jdiceglie@altamonte.org	
Doubek-Racine, Jaime	JDR	National Park Service	5342 Clark Road, PMB #123 Sarasota, Florida 34233-3227	jaime_doubek-racine@nps.gov	941-685-5912
Duncan, Dr. Jeff	JD	National Park Service	175 Hamm Road, Suite C Chattanooga, Tennessee 37405	jeff.duncan@nps.gov	423-987-6127
Gottemoeller, Fred		Bridgescape	9175 Guilford Road # 214 Columbia, Maryland 21046	fred.gottemoeller@bridgescape.net	301-490-6088
Hadley, George		Federal Highway Administration	545 John Knox Road, Suite 200 Tallahassee, Florida 32303	george.hadley@dot.gov	850-942-9650 877-478-8325
Hodges, Lindsay		Orlando-Orange County Expressway Authority	4974 ORL Tower Road Orlando, Florida 32807	hodgesl@oocea.com	407-316-3800
Jackson, Beth	BJ	Orange County Environmental Protection Division	800 Mercy Drive, Suite 4 Orlando, Florida 32808	Beth.Jackson@ocfl.net	407-836-1481
Jackson, Roy		Florida Department of Transportation	605 Suwannee Street Tallahassee, Florida 32399	roy.jackson@dot.state.fl.us	850-414-5323
Johnson, Thomas		PBS&J	482 South Keller Road Orlando, Florida 32810-6101	tljohnson@pbsj.com	407-647-7275
Jorza, Kathy	KAJ	CH2M HILL	225 East Robinson Street, Suite 505 Orlando, Florida 32801-4321	kathleen.jorza@ch2m.com	407-650-2122
Koffler, Melanie	MK	CH2M HILL	225 East Robinson Street, Suite 505 Orlando, Florida 32801-4321	melanie.koffler@ch2m.com	407-650-2195
Laisure, Debra	DCL	Florida Department of Environmental Protection	8300 West State Road 46 Sanford, Florida 32776	Debra.Laisure@dep.state.fl.us	
Lakich, John	JW	Wekiva River Basin State Parks	1800 Wekiwa Circle Apopka, Florida 32712	john.lakich@dep.state.fl.us	407-884-2006
Land, Mayor John		City of Apopka	120 East Main Street Apopka, Florida 32703	mayorsoffice@apopka.net	407-703-1703

Wekiva Parkway (S.R. 429) Project Development and Environment Study
Charette Meeting on Conceptual Design of Proposed Wekiva River Bridges - March 3, 2011
Sign-In Sheet

Name	Please Initial	Agency or Organization	Mailing Address	E-Mail Address	Phone Number
Larson, David		PBS&J	482 South Keller Road Orlando, Florida 32810-6101	DWLARSEN@PBSJ.COM	407-647-7275
LaSeur, Eileen		CH2M HILL	225 East Robinson Street, Suite 505 Orlando, Florida 32801-4321	eileen.laseur@ch2m.com	407-650-2172
Lewis, Dave		CH2M HILL	225 East Robinson Street, Suite 505 Orlando, Florida 32801-4321	david.lewis2@ch2m.com	407-650-2181
Maikisch, Michelle		Orlando-Orange County Expressway Authority	4974 ORL Tower Road Orlando, Florida 32807	maikischm@oocea.com	407-316-3800
Maingot, Mayor John C.		City of Longwood	848 Maraval Court Longwood, Florida 32750	jmaingot@longwoodfl.org	407-260-3441
Marshall, Danielle		City of Altamonte Springs Compliance Coordinator	225 Newburyport Avenue Altamonte Springs, Florida 32701	dmarshall@Altamonte.org	407-571-8331
Matthews, Tony		Seminole County Planning Division	1101 East First Street Sanford, Florida 32771	tmatthews@seminolecountyfl.gov	407-665-7936
Moradi, Massoud		PBS&J	482 South Keller Road Orlando, Florida 32810-6101	mmoradi@pbsj.com	407-806-4170
Mulligan, Ann		CH2M HILL	225 East Robinson Street, Suite 505 Orlando, Florida 32801-4321	ann.mulligan@ch2m.com	407-650-2113
Nations, Vicki		St. Johns River Water Management District	975 Keller Road Altamonte Springs, Florida 32714		
Orlowski, Tom		CH2M HILL	3001 PGA Boulevard, Suite 300 West Palm Beach Gardens, Florida 33410	thomas.orlowski@ch2m.com	561-904-7484
Perry, Mike		Lake County Water Authority	107 North Lake Avenue Tavares, Florida 32778		352-343-3777
Prather, Lisa		Florida Department of Environmental Protection	8300 West State Road 46 Sanford, Florida 32776	Lisa.Prather@dep.state.fl.us	
Pressimone, Glenn		Orlando-Orange County Expressway Authority	4974 ORL Tower Road Orlando, Florida 32807	pressimoneg@oocea.com	407-316-3800
Prine, Nancy		Friends of Wekiva River	655 Perrace Boulevard, PO Box 536815 Orlando, Florida 32803	NPLA@aol.com	407-898-9200
Raulerson, Gary		Wekiva River Aquatic Preserve, FDEP	8300 West State Road 46 Sanford, Florida 32776	gary.raulerson@deplstate.fl.us	407-470-9433
Schue, Keith		Friends of Wekiva River		ecokeith@yahoo.com Keith.Schue@yahoo.com	407-470-9433
Shanklin, Ian		National Park Service	601 Riverfront Drive Omaha, Nebraska 68102-4226	ian.shanklin@nps.gov	
Shelley, Deborah		Wekiva River Aquatic Preserve, FDEP	8300 West State Road 46 Sanford, Florida 32776	Deborah.Shelley@dep.state.fl.us	407-330-6727
Showers, Joe		CH2M HILL	9191 South Jamaica Street Englewood, Colorado 80112	joseph.showers@ch2m.com	720-286-5275
Shupe, Tom		Florida Fish and Wildlife Conservation Commission	3365 Taylor Creek Road Christmas, Florida 32709	Tom.Shupe@MyFWC.com	407-568-1704

Wekiva Parkway (S.R. 429) Project Development and Environment Study
Charette Meeting on Conceptual Design of Proposed Wekiva River Bridges - March 3, 2011
Sign-In Sheet

Name	Please Initial	Agency or Organization	Mailing Address	E-Mail Address	Phone Number
Smith, Dan	DS	University of Central Florida Faculty			
Snyder, Mike		Orlando-Orange County Expressway Authority	4974 ORL Tower Road Orlando, Florida 32807	snyderm@oocea.com	407-316-3800
Stanger, Brian	BAS	Florida Department of Transportation	719 South Woodland Boulevard DeLand, Florida 32720	brian.stanger@dot.state.fl.us	386-943-5391
Thomson, Walter		The Nature Conservancy	222 S. Westmonte Drive, Suite 300 Altamonte Springs, Florida 32714	wthomson@tnc.org	407-682-3664
Welstead, Gregg	WSW	Lake County Conservation & Compliance	315 West Main Street, Suite 520 Tavares , Florida 32778	gwelstead@lakecountyfl.gov	352-343-9106
MAGE MARTIN	MM	DIV OF FORESTRY		MARTINM@DOACS.STATE.FL.US	
CHARLES LEE	CL	AUDUBON	1101 AUDUBON WY	CLEE@AUDUBON.ORG	407 620-1178
Sarah Fowler	SAF	Orange County - Comm. Brummer	201 S Rosalind Ave, 5th floor	sarah.fowler@ocfl.net	407 836-5850
Barbara Howell	BH	FL DEP Wekiva River Aquatic Preserve	8300 W SR46 Sanford FL 32771	Barbara.Howell@dep.state.fl.us	407 330-6727
Linda Roberts (Rick)	LR	5224 WEST SR 46 #102. Sanford, FL 32771	Snook Foundation	Linda@snookfoundation.org	407 302 5550
Donna Maukonen	DM	Resident	120 Wekiva Pk Dr. Sanford 32771	donna@donnamaukonen.com	407-302-8081
MIGHK WILSON	MW	METROPLAN ORLANDO	315 E ROBINSON ST STE 355 ORLANDO 32801		407 481 5672
Martha Carswell	MC	Homeowner / Nonprofit business	130 NOVA Drive SANFORD FL 32771	TRISURVIVOR@aol.com	407-321-7188
STEVE HALLAUER 11:05PM		H.O.	141 NOVA DR SAN 32771	steven_hallauer@att.net	407 688 1656
FRANK CARTER		110 WEKIVA PARK DR.		CRBSMAN@HOTMAIL.COM	407 332 7200

CONCEPTUAL DESIGN CHARETTE FOR THE WEKIVA RIVER BRIDGES

AGENDA

March 3, 2011

9:00 a.m. – 5:00 p.m.

1. Introductions
2. Confirmation of charette process, recap site visit, objectives and desired outcomes, including process for obtaining agreement or consensus (20 min)
3. Identify stakeholder concerns, aspirations (25 minutes)
4. Identify key views and viewsheds (15 min)
5. Develop Vision Statement and Evaluation Criteria (30 minutes)

Break (10 minutes)

6. Present Functional Requirements (1 hour)
   a. Legal constraints (Section 4(f) of USDOT Act, Section 7(a) of Wild & Scenic Rivers Act)
   b. Traffic constraints (Existing, 2032 No Build and 2032 Build)
   c. Geometrical and related engineering constraints (location, vertical and horizontal controls, structural feasibility, et al)
   d. Environmental constraints (ORVs, scenery, flow, water quality, noise, wildlife habitat connectivity, et al)
7. Conceptual work to date (15 minutes)
8. Bridge catalogue, bridge types suitable for this site (15 minutes)
9. Division into groups (15 minutes)

Working Lunch (30 minutes – groups are encouraged to begin work over lunch)

10. Conduct sketch session in breakout groups (2 hours)
11. Present sketch concepts to entire group (1 hour)
12. Group discussion on concepts (30 minutes)
13. Public comments or questions (20 minutes)
14. Discuss next meeting (15 minutes)
15. Adjourn

Conceptual Design of Proposed Wekiva River Bridges

Summary Notes from Charette No. 2

April 20, 2011

The meeting was held in the Wekiva Falls RV Resort Clubhouse in Sorrento, FL. All attendees were asked to sign-in upon entry. Agenda packets and name tags were provided to all attendees. The meeting began at approximately 1:10 p.m.

Welcome and Introductions

Mr. Snyder welcomed everyone and asked that all attendees introduce themselves. A copy of the sign-in sheet is attached to this meeting summary.

Agenda

A PowerPoint presentation was used to as a guide to the meeting agenda items and discussion topics. Mr. Gottemoeller, the charette facilitator, briefly reviewed the meeting agenda. A copy of the agenda is attached to this meeting summary.

Review the Summary Notes from Charette No. 1

Mr. Gottemoeller indicated that summary notes from the Charette No. 1 meetings on March 2 and 3, 2011 were provided in the agenda package. He asked the attendees to review them and provide any suggested revisions to the Study Team.

Review, Amend and Approve the Conceptual Bridge Design Criteria List

Mr. Gottemoeller said the conceptual bridge design criteria list was provided in the agenda package. A copy is attached to this meeting summary. He said the criteria were listed under two separate headings: Engineering/Technical Criteria and Stakeholder Criteria. Mr. Gottemoeller reviewed Items 1 – 6 under the Engineering/Technical Criteria. He said a commitment has been made to clear span the river; he said the working assumption is 300 feet, but that may increase or decrease in later design. Mr. Gottemoeller then reviewed Items 1 – 11 under the Stakeholder Criteria. During discussion of Item 1, Mr. Schue said bridge length is not the only factor for habitat connectivity and impacts to wildlife. Dr. Smith said the locations of the retention ponds need to be changed. Mr. Callahan said the stormwater pond locations are just placeholders and can be adjusted later. During discussion of Item 4, Dr. Duncan suggested a higher profile could be looked at as an alternative. Mr. Gottemoeller said at the last charette it seemed the stakeholders wanted the bridge profile to be lowered. Under Item 11, Ms. Howell asked if anyone has figured the cost of fewer bridges without tolls, that is without the Service Road bridge. Mr. Snyder said the funding plan is not final and OOCEA is preparing a traffic and revenue forecast. He said the Service Road and bridge is needed for toll-free local access and traffic movement if Wekiva Parkway is a toll facility since SR 46 would not be continuous. Mr. Bishop stated that the new concepts change access to Seminole State Forest, and he said do not make access a burden.

Discuss Suggestions Received from the National Park Service (NPS)

Mr. Gottemoeller said NPS sent some suggestions after the charette meetings in March. He reviewed those suggestions which were listed on PowerPoint slides. He said many of them are being looked at and can be accommodated. However, Mr. Gottemoller said two suggestions, green roof and tunnel, are

problematic. The green roof would create weight and exhaust emissions dispersion problems. Mr. Callahan reviewed the tunnel analysis that CH2MHILL has completed to date. He said the two alternatives are cut & cover and bore. Mr. Callahan said the cut & cover option would be impactful to the river. He said the boring alternative is deeper and more expensive. Mr. Callahan reviewed the cross section for a tube type tunnel and a plan and elevation view. The diagrams showed two 60 foot tubes separated by 60 feet at a negative 100 elevation. He said the karst geology of the area and the high water table would make for a risky situation. Mr. Callahan said buildings would be required for housing ventilation fans, dewatering pumps would be needed, and fire suppression requirements would have to be met. He provided the following comparison of preliminary construction cost estimates for the project area from Wekiva River Road eastward across the Wekiva River to Wekiva Park Drive: 1) the Proposed Build Alternative with three river bridges would be about $117 million; 2) the tunnel alternative, at approximately two miles long, would be over a half billion dollars. Dr. Duncan asked if a hybrid of cut & cover and bore had been considered. Mr. Callahan said the tunnel alternative was a combination, with cut & cover on the approaches and bore at the river. Mr. Thomson said the tunnel is an interesting concept, but the ecosystem in this area is most important. He said considering the karst-nourished aquatic system, the value of habitat and the risk involved, bridges are preferred over a tunnel.

Review Concepts and Information Developed in Response to Stakeholder Input at Charette No. 1

Mr. Callahan said at the charette in March the stakeholders requested that several changes be analyzed, including moving the Service Road bridge to the south side, separating the three bridges for light penetration, and lowering the profile of the bridges. He said all of those items were evaluated. He reviewed and described Alternative Concepts A, B and C, including the advantages and challenges presented by each concept. Each of the three alternatives separates the three bridges by about ten feet. Alternative A keeps the Service Road bridge on the north side, but lowers the profile of the bridges over the river. Alternative B moves the Service Road bridge to the south side, but the profiles of the mainline and service road bridges over the river are divergent. Since the Service Road would be on the south side of Wekiva Parkway west of the river to Wekiva Pines, access to Seminole State Forest would be indirect. Alternative C also moves the Service Road bridge to the south side, but makes the profiles of the mainline and service road bridges nearly the same over the river. However, other changes are required such as realigning Wekiva Park Drive and indirect travel for River Oaks. Like Alternative B, access to Seminole State Forest would be indirect. Any of these alternatives could accommodate a new wildlife bridge west of Wekiva River Road. The bridges over the river are reduced in length under each alternative.

Mr. Bishop said it is unclear what is being gained by lowering the profile of the bridges and moving the Service Road to the south side. Dr. Duncan said the Service Road is the issue that affects this the most. He asked if there are other solutions to the Service Road. He said, as we move forward, the existing bridge should be shown on the profiles. Mr. Snyder provided background on why the Service Road is needed. He said, due to the lack of Federal and State dollars for the project, it appears Wekiva Parkway will have to be a toll road. State legislation mandates that SR 46 must go away in this area for purposes of conservation and wildlife habitat, so the Service Road must be provided for toll-free access to private property and for travel across the river between Lake and Seminole Counties as currently exists. Toll-

free travel on the Wekiva Parkway mainline is not allowed by law. Mr. Roberts asked if anyone knew how much truck traffic there is at night on SR 46. He said get trucks off the road at night to avoid killing wildlife. Mr. Snyder said that type of restriction on road-users is not allowed.

Mr. Lewis gave a brief presentation on a balloon visibility test conducted by the Study Team. He said this was done to answer stakeholder questions about how far away and from where the bridges could be seen. He said large, high visibility (red, yellow and orange) helium balloons were tethered at three locations on the existing SR 46 bridge; the balloons were floated at 60 feet and then at 40 feet above zero elevation (i.e., the river bottom). Digital photos were taken from the view sites identified by the stakeholders at the previous charette meeting. Using an aerial-based display board of the river area north and south of the SR 46 bridge with 17 red dots depicting photo locations and the multiple photos in the PowerPoint presentation, Mr. Lewis discussed balloon visibility from the 17 viewpoints and the resulting viewshed for the bridge that was determined. Dr. Duncan said the information and the identification of the viewshed is helpful. He said we need to see noise isopleths. Mr. Callahan said noise data and isopleths will be developed later in the process.

Review and Evaluate the Bridge Alternatives and Renderings

Mr. Showers reviewed the bridges types that were deemed inappropriate for this location based on the input received from the stakeholders at the previous charette and, therefore, were not considered in this evaluation. He then identified the five bridge alternatives that were analyzed:

- Segmental Concrete Box Girder
- Strutted Segmental Concrete Box Girder
- Concrete Through-Girder
- Steel Box “Tub” Girders
- Composite Steel Truss

Using PowerPoint slides, Mr. Showers discussed each of the bridge types and showed color renderings depicting each bridge at the Wekiva River crossing location. He said the bridge profiles where based on those in Alternative Concept C which had been discussed` earlier in the meeting. Mr. Thomson asked if there is a difference in noise between concrete and steel bridges. Mr. Showers said there is not really much difference, but concrete does tend to absorb some noise. Mr. Gottemoeller said there needs to be a discussion on the height of the bridges being above or below the tree line. Mr. Shupe said there needs to be consideration of the need for adequate bridge height for wildlife movement and not just lowered height for aesthetics. Dr. Smith said there are Federal standards for wildlife species crossing dimensions. Dr. Duncan said NPS has to enforce Section 7 of the Wild & Scenic Rivers Act to ensure no adverse effects on Outstandingly Remarkable Values, which includes wildlife. Mr. Callahan asked Dr. Duncan “so you’re not saying the bridge has to be lower?” Dr. Duncan replied “no.” Mr. Shanklin said there is a need to minimize contrast; lower has less contrast. Mr. Schue said the balloon test shows the height we had last time wasn’t bad.

Identify the 2 or 3 Most Desirable Alternatives for Further Evaluation

Mr. Gottemoeller showed the slides again of the renderings of the five alternative bridge types. He said an Evaluation Matrix was provided in the agenda package. Mr. Gottemoeller reviewed the items on the

evaluation form. He asked attendees to complete the Evaluation Matrix form and give it to the Study Team. Mr. Bishop asked if there would be a chain link fence on top of the barrier wall, as there is on the existing bridge, for all the alternatives. Mr. Callahan said there could be and/or perhaps a noise wall, and would that affect stakeholder opinions on any of these alternatives. Dr. Duncan said the bridge renderings are hyper-shadowed, and he would like to see them without shadows. Ms. Prine asked which bridge is the thinnest (i.e., from top of parapet to bottom of bridge). Mr. Showers said the concrete through-girder would be the thinnest of the alternatives, followed by the steel box "tub" girder as the next thinnest. Mr. Shanklin indicated the through-girder was a no-go from a scenic standpoint on the St. Croix project. He said NPS standards are: form; visual; screening traffic so you don't see the bright red truck, for example; the strutted alternative is too regular, make it more irregular; color – use darker, more recessive tones; truss – people liked it on the St. Croix River project because it is complex; acoustics – parameter is logarithmic design, not just a noise wall; and pedestrian space – put it over the top.

Public Comments or Questions

Mr. Gottemoeller asked if there were any public comments or questions. Ms. Brabham suggested that NPS meet with CH2MHILL to discuss what is allowable and what is not prior to the next meeting, to help narrow down the options. A citizen said NPS should just tell CH2MHILL what they won't allow.

Discuss Next Meeting Date

May 18, 2011 at 1 p.m. was suggested as the date and time for Charette No. 3. The meeting location is to be determined.

Adjournment

The meeting adjourned at approximately 5:10 p.m.

Wekiva Parkway (S.R. 429) Project Development and Environment Study
Charette Meeting on Conceptual Design of Proposed Wekiva River Bridges - April 20, 2011
Sign-In Sheet

Name	Please Initial	Agency or Organization	Mailing Address	E-Mail Address	Phone Number
Anderson, Linda	LKA	Federal Highway Administration	545 John Knox Road, Suite 200 Tallahassee, Florida 32303	Linda.K.Anderson@fhwa.dot.gov	850-553-2226
Brabham, Mary	MB	St. Johns River Water Management District	975 Keller Road Altamonte Springs, Florida 32714	mbrabham@sjrwmd.com	407-659-4829
Brummer, Fred, Orange County Commissioner		ECFRPC Representative	C201 South Rosalind Avenue Orlando, Florida 32802	district2@ocfl.net	407-836-7350
Callahan, Mark	✓	CH2M HILL	225 East Robinson Street, Suite 505 Orlando, Florida 32801-4321	mark.callahan@ch2m.com	407-650-2150
Campione, Commissioner Leslie		Lake County Board of County Commissioners	P.O. Box 7800 Tavres, Florida 32778-7800	lcampione@lakecountyfl.gov	352-343-9850
Christman, Nancy	NC	St. Johns River Water Management District	975 Keller Road Altamonte Springs, Florida 32714	nchristman@sjrwmd.com	407-659-4835
Diceglie, Jay		City of Altamonte Springs Public Works Administration	225 Newburyport Avenue Altamonte Springs, Florida 32701	Jdiceglie@altamonte.org	407-571-8340
Doubek-Racine, Jaime	J.D.R.	National Park Service	5342 Clark Road, PMB #123 Sarasota, Florida 34233-3227	jaime_doubek-racine@nps.gov	941-685-5912
Duncan, Dr. Jeff	JD	National Park Service	175 Hamm Road, Suite C Chattanooga, Tennessee 37405	jeff.duncan@nps.gov	423-987-6127
Fowler, Sarah	SAF	Orange County -- Assistant to Comm. Brummer	201 S. Rosalind Ave., 8th Floor Orlando, FL 32802	Sarah.Fowler@ocfl.net	407-836-5850
Gottemoeller, Fred	FG	Bridgescape	9175 Guilford Road # 214 Columbia, Maryland 21046	fred.gottemoeller@bridgescape.net	301-490-6088
Hadley, George		Federal Highway Administration	545 John Knox Road, Suite 200 Tallahassee, Florida 32303	george.hadley@dot.gov	850-553-2224
Hodges, Lindsay	LSH	Orlando-Orange County Expressway Authority	4974 ORL Tower Road Orlando, Florida 32807	hodgesl@oocea.com	407-316-3800
Howell, Barbara	BH	FDEP Wekiva River Aquatic Preserve	8300 West SR 46 Sanford, FL 32771	Barbara.Howell@dep.state.fl.us	407-330-6727
Jackson, Beth	BJ	Orange County Environmental Protection Division	800 Mercy Drive, Suite 4 Orlando, Florida 32808	Beth.Jackson@ocfl.net	407-836-1481
Jackson, Roy		Florida Department of Transportation	605 Suwannee Street Tallahassee, Florida 32399	roy.jackson@dot.state.fl.us	850-414-5323
Jorza, Kathy		CH2M HILL	225 East Robinson Street, Suite 505 Orlando, Florida 32801-4321	kathleen.jorza@ch2m.com	407-650-2122
Koffler, Melanie	✓	CH2M HILL	225 East Robinson Street, Suite 505 Orlando, Florida 32801-4321	melanie.koffler@ch2m.com	407-650-2195
Laisure, Debra	DCL	Florida Department of Environmental Protection	3319 Maguire Blvd., Suite 232 Orlando, Florida 32803-3767	Debra.Laisure@dep.state.fl.us	407-893-7874
Lakich, John	JL	Wekiva River Basin State Parks	1800 Wekiwa Circle Apopka, Florida 32712	john.lakich@dep.state.fl.us	407-884-2006
Land, Mayor John		City of Apopka	120 East Main Street Apopka, Florida 32703	mayorsoffice@apopka.net	407-703-1703

Wekiva Parkway (S.R. 429) Project Development and Environment Study
Charette Meeting on Conceptual Design of Proposed Wekiva River Bridges - April 20, 2011
Sign-In Sheet

Name	Please Initial	Agency or Organization	Mailing Address	E-Mail Address	Phone Number
LaSeur, Eileen	✓	CH2M HILL	225 East Robinson Street, Suite 505 Orlando, Florida 32801-4321	eileen.laseur@ch2m.com	407-650-2172
Lee, Charles		Audubon of Florida	1101 Audubon Way Maitland, FL 32751	clee@audubon.org	407-539-5700
Lewis, Dave		CH2M HILL	225 East Robinson Street, Suite 505 Orlando, Florida 32801-4321	david.lewis2@ch2m.com	407-650-2181
Maikisch, Michelle		Orlando-Orange County Expressway Authority	4974 ORL Tower Road Orlando, Florida 32807	maikischm@oocea.com	407-316-3800
Maingot, Mayor John C.		City of Longwood	848 Maraval Court Longwood, Florida 32750	jmaingot@longwoodfl.org	407-260-3441
Marshall, Danielle		City of Altamonte Springs Compliance Coordinator	225 Newburyport Avenue Altamonte Springs, Florida 32701	dmarshall@Altamonte.org	407-571-8331
~~Martin, Mike~~ Bishop, Joe		FDACS, Division of Forestry (Seminole State Forest)	9610 CR 44 Leesburg, FL 34788	~~MartinM@doacs.state.fl.us~~ Joseph.Bishop@fresh from florida.com	352-360-6677
Matthews, Tony		Seminole County Planning Division	1101 East First Street Sanford, Florida 32771	tmatthews@seminolecountyfl.gov	407-665-7936
Moradi, Massoud		~~PBS&J~~ ATKINS	482 South Keller Road Orlando, Florida 32810-6101	mmoradi@pbsj.com	407-806-4170
Mulligan, Ann		CH2M HILL	225 East Robinson Street, Suite 505 Orlando, Florida 32801-4321	ann.mulligan@ch2m.com	407-650-2113
Nations, Vicki		St. Johns River Water Management District	975 Keller Road Altamonte Springs, Florida 32714	vnations@sjrwmd.com	407-659-4858
Perry, Mike		Lake County Water Authority	107 North Lake Avenue Tavares, Florida 32778	info@lcwa.org	352-343-3777
Prather, Lisa		Florida Department of Environmental Protection	3319 Maguire Blvd., Suite 232 Orlando, Florida 32803-3767	Lisa.Prather@dep.state.fl.us	407-893-7869
Pressimone, Glenn		Orlando-Orange County Expressway Authority	4974 ORL Tower Road Orlando, Florida 32807	pressimoneg@oocea.com	407-316-3800
Prine, Nancy		Friends of Wekiva River	655 Perrace Boulevard, PO Box 536815 Orlando, Florida 32803	NPLA@aol.com	407-898-9200
Raulerson, Gary		Wekiva River Aquatic Preserve, FDEP	8300 West State Road 46 Sanford, Florida 32776	gary.raulerson@dep.state.fl.us	407-330-6727
Schue, Keith		Friends of Wekiva River		keith.schue@yahoo.com	407-470-9433
Shanklin, Ian		National Park Service	601 Riverfront Drive Omaha, Nebraska 68102-4226	ian.shanklin@nps.gov	402-661-1850
Shelley, Deborah		Wekiva River Aquatic Preserve, FDEP	8300 West State Road 46 Sanford, Florida 32776	Deborah.Shelley@dep.state.fl.us	407-330-6727
Showers, Joe		CH2M HILL	9191 South Jamaica Street Englewood, Colorado 80112	joseph.showers@ch2m.com	720-286-5275
Shupe, Tom		Florida Fish and Wildlife Conservation Commission	3365 Taylor Creek Road Christmas, Florida 32709	Tom.Shupe@MyFWC.com	407-568-1704

Wekiva Parkway (S.R. 429) Project Development and Environment Study
Charette Meeting on Conceptual Design of Proposed Wekiva River Bridges - April 20, 2011
Sign-In Sheet

Name	Please Initial	Agency or Organization	Mailing Address	E-Mail Address	Phone Number
Smith, Dr. Dan	DJS	University of Central Florida Faculty	College of Sciences, Biology Dept. 4000 Central Florida Blvd., Orlando, FL 32816	daniel@mail.ucf.edu	407-823-2141
Snyder, Mike	✓	Orlando-Orange County Expressway Authority	4974 ORL Tower Road Orlando, Florida 32807	snyderm@oocea.com	407-316-3800
Stanger, Brian	BMS	Florida Department of Transportation	719 South Woodland Boulevard, MS 501 DeLand, Florida 32720	brian.stanger@dot.state.fl.us	386-943-5391
Thomson, Walter	WMT	The Nature Conservancy	222 S. Westmonte Drive, Suite 300 Altamonte Springs, Florida 32714	wthomson@tnc.org	407-682-3664
Welstead, Gregg	WSW	Lake County Conservation & Compliance	315 West Main Street, Suite 520 Tavares , Florida 32778	gwelstead@lakecountyfl.gov	352-343-9106
Wilson, Mighk	[illegible]	Metroplan Orlando	315 E. Robinson St., Suite 355 Orlando, FL 32801-4321	mwilson@metroplanorlando.com	407-481-5672
INTERESTED CITIZENS:					
Carswell, Martha ✓	MAC	Resident [illegible]	130 Nova Drive Sanford, FL 32771	trisurvivr@aol.com	407-321-7188
Carter, Frank ✓	FC	Resident Frank Carter	110 Wekiva Park Drive Sanford, FL 32771	crbman@hotmail.com	407-332-7200
Hallauer, Steve	[illegible]	Resident	141 Nova Drive Sanford, FL 32771	steven_hallauer@att.net	407-688-1656
Maukonen, Donna [illegible]	✓	Resident	120 Wekiva Park Drive Sanford, FL 32771	donna@donnamaukonen.com	407-302-8081
Roberts, Linda & Rick [illegible]	✓	Snook Foundation	5224 West SR 46, #102 Sanford, FL 32771	linda@snookfoundation.org	407-302-5550
Burns, Krystal	✓	CH2M HILL		krystal.burns@ch2m.com	
ARTHUR, GEOFFREY	✓	31850 BROWNS RD	1935 SOUTH CONWAY RD ORLANDO FL 32812	THEARTHURS@mac.com	407-273-4855
~~Bishop, Joe~~		~~Dir~~			
Fred Schneider	FS	Lake Co. Public Works		fschneider@lakecountyfl.gov	352 483 4090

CONCEPTUAL DESIGN CHARETTE FOR THE WEKIVA RIVER BRIDGES

AGENDA
CHARETTE NO. 2
April 20, 2011
1:00 p.m. – 5:00 p.m.

1. Introductions (5 minutes)
2. Review the Summary Notes from Charette No. 1 Meetings on March 2 and 3, 2011 and Discuss Any Needed Revisions (20 minutes)
3. Review, Amend and Approve the Conceptual Bridge Design Criteria List (20 minutes)
4. Discuss Suggestions Received from the National Park Service on March 28, 2011 (20 minutes)
5. Review Concepts and Other Information Developed in Response to Stakeholder Input Received at Charette No. 1 (45 minutes)
    - Alternative A
      - Concept Description
      - Advantages and Challenges
    - Alternative B
      - Concept Description
      - Advantages and Challenges
    - Alternative C
      - Concept Description
      - Advantages and Challenges
    - Other Information Developed
      - Balloon Elevation Visibility Test
      - Stormwater Drainage Containment/Piping Off Bridge

Break (10 minutes)

6. Review and Evaluate the Bridge Alternatives and Renderings (1 hour)
    - Segmental Concrete Box Girder
    - Strutted Segmental Concrete Box Girder
    - Concrete Through-Girder
    - Steel Box "Tub" Girders
    - Composite Steel Truss
7. Identify the 2 or 3 Most Desirable Alternatives for Further Refinement (30 minutes)
8. Public Comments or Questions (15 minutes)
9. Discuss Next Steps (10 minutes)
10. Discuss Next Meeting Date (5 minutes)
11. Adjourn

Conceptual Design of Wekiva River Bridges
Summary Notes from Charette No. 3
July 13, 2011

The Florida Department of Transportation (FDOT) and the Orlando-Orange County Expressway Authority (OOCEA) sponsored and duly advertised the charette. The meeting was held in the Wekiva Falls RV Resort Clubhouse in Sorrento, FL. All attendees were asked to sign-in upon entry. Agenda packets and name tags were provided to all attendees. The meeting began at approximately 1:12 p.m.

Welcome and Introductions

Mr. Gottemoeller, the charette facilitator, welcomed everyone and asked all attendees to introduce themselves. A copy of the sign-in sheet is attached to this meeting summary.

Agenda

A PowerPoint presentation was used as a guide to the meeting agenda items and discussion topics. Mr. Gottemoeller briefly reviewed the meeting agenda. A copy of the agenda is attached to this meeting summary.

Review the Summary Meeting Notes from Charette No. 2

Mr. Gottemoeller said the summary notes from Charette No. 2 on April 20, 2011 were provided in the agenda package. He asked the attendees to review them and provide any suggested revisions to the Study Team.

Today's Goals

Mr. Gottemoeller said we are hoping to develop a consensus on the bridge. He stated at today's charette we would like to select a bridge type and a profile to move forward with in the process.

Review the National Park Service Decision Tool – Outstandingly Remarkable Values (ORV) Checklist

Dr. Duncan and Mr. Shanklin of the National Park Service (NPS) provided handouts on the ORV checklist to all attendees (a sample copy is attached to this meeting summary). Dr. Duncan said FDOT/OOCEA have been asking NPS to provide evaluation criteria under Section 7 for use in the charette process. He said NPS really didn't have anything specific, so Mr. Shanklin developed the ORV checklist. Dr. Duncan said it is essentially a survey tool which is heavily weighted toward scenery. He said it could be used to rate the three bridge types which FDOT/OOCEA would be showing later in the meeting.

Review Stakeholder Bridge Concept Sketches from Charette No. 1

Mr. Gottemoeller directed attention to the seven sketches developed by the attendees at Charette No. 1 on March 3, 2011 which were mounted on display boards. He asked all attendees to take a few minutes to look at them again. After the attendees reviewed the sketches, Mr. Gottemoeller discussed the similar pier design concepts in the sketches and said those could be addressed in final design. He said the sketch concepts resembled either the segmental concrete box girder or the composite steel truss bridge types which would be shown next in renderings. He said the signature items, such as totems, in some of the sketches could be added to any of the bridge type alternatives.

Mr. Gottemoeller reviewed three slides previously presented by Mr. Shanklin in Charette No. 1 which addressed scenic value, background and vegetation, texture and detail, and structural systems with patterns and texture.

Review and Evaluate Renderings of the Bridge Type Alternatives

Mr. Gottemoeller said after the evaluation of five bridge types at the last charette, the alternatives that were identified for further consideration and development are as follows:

- Bridge Type 1 – Segmental Concrete Box Girder
- Bridge Type 2 – Strutted Segmental Concrete Box Girder
- Bridge Type 3 – Composite Steel Truss

Each of the three bridge types was shown in a color rendering at the river location setting on both the Alternatives C and D profiles. Mr. Gottemoeller said since the bridges would be on an east-west alignment the shadows would be mostly on the south side.

Segmental concrete box girder bridge type: Mr. Gottemoeller said there would be the option to add color to the concrete on the piers and parapet to blend better with the surroundings. A fence was shown on the parapet in one of the renderings. Dr. Duncan asked why a fence would be needed; he said this is new. Mr. Callahan said FDOT/OOCEA have gotten questions recently about the need for a fence since the existing bridge has it. He said the fence may be needed to stop trash from being thrown into the river, to discourage fishing and jumping from the bridge, and for safety since the service road bridge would have a trail/bike path. Dr. Duncan asked if it was a pedestrian issue. Mr. Callahan said safety is paramount, but stopping trash from being thrown into the river is important. Mr. Thompson asked if there could be plants on the bridge instead of a fence. The Study Team distributed handouts of a planter concept on the service road bridge that had been sketched by Mr. Gottemoeller. Ms. Doubek-Racine asked if the fence is a mandate. The answer was no, but something will be needed. Ms. Prine said she didn't want bridge users to miss the river view and she said that could happen with a planter. Dr. Duncan said he was intrigued by the concept of a vegetation planter on the bridge; he said he was concerned by the fence. He said perhaps the design could cantilever a pedestrian structure below the bridge with a cage around it. Mr. Shanklin said he thinks we can accomplish both the visual and safety needs in a future concept. Mr. Gottemoeller said we can further discuss the fence later, if necessary, after we get through the review of bridge type renderings.

Strutted segmental concrete box girder bridge type: Mr. Gottemoeller said the V shaped struts would be in front of the box girder on a sloped plane. In discussion of the pier detail, Ms. Prine asked if a single pier could be used instead of two. Mr. Showers said yes that could be done. In answer to another question, Mr. Showers said either concrete or steel struts could be used.

Composite steel truss bridge type: Mr. Gottemoeller explained that the pier detail has changed from what was shown on the slide. He said the vertical members are now on a tilted plane with a single horizontal member at the bottom. He said it is less visually complex. Ms. Shelley and Mr. Thompson said they didn't like the truss bridge type. Mr. Thompson asked which bridge type gives the most flexibility for texture, color, etc. Mr. Showers said concrete. Mr. Gottemoeller said concrete, not steel, has the most flexibility for treatments.

Mr. Gottemoeller said it was now time to score the three bridge types using the NPS-provided ORV checklist. He showed the slides again of the renderings for each bridge type. The attendees filled-out the ORV checklist for each of the bridge types. Dr. Duncan said since the checklist is quite long please focus on the scenery portion. A question was asked if all the bridge types would use the same drainage system to get water off the bridge. Mr. Callahan said yes. Mr. Gottemoeller asked the attendees to put their name on the completed checklists and give them to NPS to collate.

Select the Best Bridge Type

Mr. Gottemoeller said it was now time to select the best bridge type. He asked each of the attendees for their preference. Of those who identified a preference, 16 selected Segmental Concrete Box Girder**,** one selected Strutted Segmental Concrete Box Girder, and one selected Composite Steel Truss. Many of those who selected Segmental Concrete Box Girder indicated that there should be some type of treatment and/or color.

The three NPS representatives, Dr. Duncan, Mr. Shanklin and Ms. Doubek-Racine, said they had no opinion yet or were neutral. Mr. Shanklin said in reviewing some of the completed checklists the Segmental Concrete Box Girder bridge type scored lowest on visual contrast rating. He said simulations can be deceiving. He said on the Composite Steel Truss bridge type the truss members could be made smaller, and the Strutted Segmental Concrete Box Girder bridge type could have more abstract struts. Dr. Duncan said some of the checklists had question marks which mean we don't really know yet. He said perhaps we could note the advisory preference for the Segmental Concrete Box Girder bridge type, but we should not dismiss the others yet. Mr. Gottemoeller said the record of the proceedings should include a statement on the advisory preference for the Segmental Concrete Box Girder bridge type. Dr. Duncan said okay, but if there are design elements that are not captured please elaborate on that.

Mr. Schue asked, where do we go from here? Mr. Gottemoeller said we need to decide on the best profile, which will be later in the meeting after Mr. Callahan's presentation on alternative concepts and the noise assessment.

Review and Discuss Alternative Concepts/Profiles

Mr. Callahan said additional alternative concepts and profiles were developed in response to stakeholder input received at Charette No. 2. He discussed and described plots of three alternative concepts (C, D and E) which showed plan views and profiles, and he indicated the advantages and challenges of each concept. Copies of each of the plots were provided at seven locations around the room for the attendees to review during the discussion.

<u>Alternative C:</u> Mr. Callahan said Alternative C was a refinement of a concept shown at Charette No. 2. He said the profile was 11 to 16 feet lower than the PER alternative, the bridges have been separated, the Service Road bridge was moved to the south side, and impact to the small island to the north was reduced by about 61 feet. However, he said there would be indirect access to Seminole State Forest (SSF) and a shorter bridge length of approximately 1,450 feet with this alternative.

<u>Alternative D:</u> Mr. Callahan said Alternative D has a profile 4 to 9 feet lower than the PER alternative, the bridges have been separated, the Service Road bridge was moved to the south side, and impact to

the small island to the north was reduced by about 61 feet. He said the bridge length of approximately 1,750 feet would be the same as the PER alternative and there would be direct access to SSF.

Alternative E: Mr. Callahan said Alternative E has the same profile as the PER alternative, but the bridges have been separated, the Service Road bridge was moved to the south side, and impact to the small island to the north was reduced by about 61 feet. He said the bridge length of approximately 1,750 feet would be the same as the PER alternative and there would be direct access to SSF.

Mr. Callahan then reviewed a summary comparison of the alternatives (shown below) which was included in the agenda packet.

Alternative	Length of Bridge	Distance from West Abutment to River	Vertical Clearance at West Abutment	Roadway Height at River
PER	1750'	975'	25'	66'
C	1445'	670'	12'	52'
D	1750'	975'	12'	60'
E	1750'	975'	25'	66'

Review and Discuss Results of the Noise Assessment

Mr. Callahan said the results of the noise assessment and a graphic were included in the agenda packet. He discussed the four river bridge scenarios that were modeled using the FHWA TNM 2.5 noise model: existing condition, Alternative C with and without an 8 foot noise wall, Alternative D with and without an 8 foot noise wall, and the PER Alternative with and without an 8 foot noise wall. Mr. Callahan said none of the alternatives produced a substantial dBA increase using FHWA and FDOT criteria, and a noise wall would not provide much attenuation and would be of little benefit.

Select the Best Profile

Mr. Gottemoeller said it was time to select the best profile. The general consensus of the attendees was that Alternative D provided the best compromise to achieve a lower bridge profile for aesthetics while providing sufficient bridge length and horizontal/vertical clearance to accommodate wildlife movement.

Public Comments or Questions

Mr. Gottemoeller asked if any members of the public wished to make verbal comments (forms for written comments were provided at the sign-in table). Mr. Matthews of Seminole County asked, what does “advisory” mean with regard to the group’s preference for best bridge type and profile? Dr. Duncan said it means we do not have all the details yet.

Discuss Next Steps

Mr. Gottemoeller said some of the next steps are details about what was discussed today. Mr. Thompson said he didn’t know what the final look of the alternatives would be; he said it may satisfy Section 7 for NPS, but there are other issues.

Mr. Snyder said we still have a long way to go. He said we won’t have Section 7 details until final design. Mr. Snyder said this will be the last charette meeting, but not the end of the process. He said there are still lots of issues and concerns to address. He said NPS still needs lots of questions answered. Mr. Snyder said the bridge designers will work with NPS and the Wekiva River System Advisory Management

Committee to address Section 7. He said we are getting close to having an environmental document with FHWA. He said we still have to satisfy FHWA Section 4(f) requirements and, in the longer term, NPS Section 7. Mr. Snyder said we will continue to resolve issues. He said thank you all for your involvement.

Adjournment

The meeting adjourned at approximately 4:10 p.m.

Wekiva Parkway (S.R. 429) Project Development and Environment Study
Charette Meeting on Conceptual Design of Proposed Wekiva River Bridges - July 13, 2011
Sign-In Sheet

Name	Please Initial	Agency or Organization	Mailing Address	E-Mail Address	Phone Number
Anderson, Linda		Federal Highway Administration	545 John Knox Road, Suite 200 Tallahassee, Florida 32303	Linda.K.Anderson@fhwa.dot.gov	850-553-2226
Joe Berenis		Orlando-Orange County Expressway Authority	4974 ORL Tower Road Orlando, Florida 32807	berenisj@oocea.com	407-690-5000
Bishop, Joe		FDACS, Division of Forestry (Seminole State Forest)	9610 CR 44 Leesburg, Florida 34788	joseph.bishop@freshfromflorida.com	352-360-6677
Brabham, Mary		St. Johns River Water Management District	975 Keller Road Altamonte Springs, Florida 32714	mbrabham@sjrwmd.com	407-659-4829
Brummer, Fred, Orange County Commissioner		ECFRPC Representative	C201 South Rosalind Avenue Orlando, Florida 32802	district2@ocfl.net	407-836-7350
Callahan, Mark		CH2M HILL	225 East Robinson Street, Suite 505 Orlando, Florida 32801-4321	mark.callahan@ch2m.com	407-650-2150
Campione, Commissioner Leslie		Lake County Board of County Commissioners	P.O. Box 7800 Tavres, Florida 32778-7800	lcampione@lakecountyfl.gov	352-343-9850
Christman, Nancy		St. Johns River Water Management District	975 Keller Road Altamonte Springs, Florida 32714	nchristman@sjrwmd.com	407-659-4835
Diceglie, Jay		City of Altamonte Springs Public Works Administration	225 Newburyport Avenue Altamonte Springs, Florida 32701	Jdiceglie@altamonte.org	407-571-8340
Doubek-Racine, Jaime		National Park Service	5342 Clark Road, PMB #123 Sarasota, Florida 34233-3227	jaime_doubek-racine@nps.gov	941-685-5912
Duncan, Dr. Jeff		National Park Service	175 Hamm Road, Suite C Chattanooga, Tennessee 37405	jeff.duncan@nps.gov	423-987-6127
Fowler, Sarah		Orange County -- Assistant to Comm. Brummer	201 S. Rosalind Ave., 8th Floor Orlando, FL 32802	Sarah.Fowler@ocfl.net	407-836-5850
Gottemoeller, Fred		Bridgescape	9175 Guilford Road # 214 Columbia, Maryland 21046	fred.gottemoeller@bridgescape.net	301-490-6088
Hodges, Lindsay		Orlando-Orange County Expressway Authority	4974 ORL Tower Road Orlando, Florida 32807	hodgesl@oocea.com	407-690-5000
Howell, Barbara		FDEP Wekiva River Aquatic Preserve	8300 West SR 46 Sanford, FL 32771	Barbara.Howell@dep.state.fl.us	407-330-6727
Jackson, Beth		Orange County Environmental Protection Division	800 Mercy Drive, Suite 4 Orlando, Florida 32808	Beth.Jackson@ocfl.net	407-836-1481
Jackson, Roy		Florida Department of Transportation	605 Suwannee Street Tallahassee, Florida 32399	roy.jackson@dot.state.fl.us	850-414-5323
Jorza, Kathy		CH2M HILL	225 East Robinson Street, Suite 505 Orlando, Florida 32801-4321	kathleen.jorza@ch2m.com	407-650-2122
Koffler, Melanie		CH2M HILL	225 East Robinson Street, Suite 505 Orlando, Florida 32801-4321	melanie.koffler@ch2m.com	407-650-2195
Laisure, Debra		Florida Department of Environmental Protection	3319 Maguire Blvd., Suite 232 Orlando, Florida 32803-3767	Debra.Laisure@dep.state.fl.us	407-893-7874
Lakich, John		Wekiva River Basin State Parks	1800 Wekiwa Circle Apopka, Florida 32712	john.lakich@dep.state.fl.us	407-884-2006

Wekiva Parkway (S.R. 429) Project Development and Environment Study
Charette Meeting on Conceptual Design of Proposed Wekiva River Bridges - July 13, 2011
Sign-In Sheet

Name	Please Initial	Agency or Organization	Mailing Address	E-Mail Address	Phone Number
Land, Mayor John		City of Apopka	120 East Main Street Apopka, Florida 32703	mayorsoffice@apopka.net	407-703-1703
LaSeur, Eileen		CH2M HILL	225 East Robinson Street, Suite 505 Orlando, Florida 32801-4321	eileen.laseur@ch2m.com	407-650-2172
Lee, Charles		Audubon of Florida	1101 Audubon Way Maitland, FL 32751	clee@audubon.org	407-539-5700
Lewis, Dave		CH2M HILL	225 East Robinson Street, Suite 505 Orlando, Florida 32801-4321	david.lewis2@ch2m.com	407-650-2181
Maikisch, Michelle		Orlando-Orange County Expressway Authority	4974 ORL Tower Road Orlando, Florida 32807	maikischm@oocea.com	407-690-5000
Maingot, Mayor John C.		City of Longwood	848 Maraval Court Longwood, Florida 32750	jmaingot@longwoodfl.org	407-260-3441
Marshall, Danielle		City of Altamonte Springs Compliance Coordinator	225 Newburyport Avenue Altamonte Springs, Florida 32701	dmarshall@Altamonte.org	407-571-8331
Matthews, Tony		Seminole County Planning Division	1101 East First Street Sanford, Florida 32771	tmatthews@seminolecountyfl.gov	407-665-7936
Moradi, Massoud		~~PBS&J~~ ATKINS	482 South Keller Road Orlando, Florida 32810-6101	mmoradi@pbsj.com	407-806-4170
Mulligan, Ann		CH2M HILL	225 East Robinson Street, Suite 505 Orlando, Florida 32801-4321	ann.mulligan@ch2m.com	407-650-2113
Nations, Vicki		St. Johns River Water Management District	975 Keller Road Altamonte Springs, Florida 32714	vnations@sjrwmd.com	407-659-4858
Perry, Mike		Lake County Water Authority	107 North Lake Avenue Tavares, Florida 32778	info@lcwa.org	352-343-3777
Prather, Lisa		Florida Department of Environmental Protection	3319 Maguire Blvd., Suite 232 Orlando, Florida 32803-3767	Lisa.Prather@dep.state.fl.us	407-893-7869
Pressimone, Glenn		Orlando-Orange County Expressway Authority	4974 ORL Tower Road Orlando, Florida 32807	pressimoneg@oocea.com	407-690-5000
Prine, Nancy		Friends of Wekiva River	655 Perrace Boulevard, PO Box 536815 Orlando, Florida 32803	NPLA@aol.com	407-898-9200
Raulerson, Gary		Wekiva River Aquatic Preserve, FDEP	8300 West State Road 46 Sanford, Florida 32776	gary.raulerson@dep.state.fl.us	407-330-6727
Schneider, Fred		Lake County Public Works Department	437 Ardice Ave. Eustis, FL 32726	fschneider@lakecountyfl.gov	352-483-4090
Schue, Keith		Friends of Wekiva River		keith.schue@yahoo.com	407-470-9433
Shanklin, Ian		National Park Service	601 Riverfront Drive Omaha, Nebraska 68102-4226	ian.shanklin@nps.gov	402-661-1850
Shelley, Deborah		Wekiva River Aquatic Preserve, FDEP	8300 West State Road 46 Sanford, Florida 32776	Deborah.Shelley@dep.state.fl.us	407-330-6727
Showers, Joe		CH2M HILL	9191 South Jamaica Street Englewood, Colorado 80112	joseph.showers@ch2m.com	720-286-5275

Wekiva Parkway (S.R. 429) Project Development and Environment Study
Charette Meeting on Conceptual Design of Proposed Wekiva River Bridges - July 13, 2011
Sign-In Sheet

Name	Please Initial	Agency or Organization	Mailing Address	E-Mail Address	Phone Number
Shupe, Tom	TB	Florida Fish and Wildlife Conservation Commission	3365 Taylor Creek Road Christmas, Florida 32709	Tom.Shupe@MyFWC.com	407-568-1704
Smith, Dr. Dan	DGS	University of Central Florida Faculty	College of Sciences, Biology Dept. 4000 Central Florida Blvd., Orlando, FL 32816	daniel@mail.ucf.edu	407-823-2141
Snyder, Mike		Orlando-Orange County Expressway Authority	4974 ORL Tower Road Orlando, Florida 32807	snyderm@oocea.com	407-690-5000
Stanger, Brian	BMS	Florida Department of Transportation	719 South Woodland Boulevard, MS 501 DeLand, Florida 32720	brian.stanger@dot.state.fl.us	386-943-5391
Thomson, Walter	WT	~~The Nature Conservancy~~	~~222 S. Westmonte Drive, Suite 300~~ ~~Altamonte Springs, Florida 32714~~	wthomson4@yahoo.com wthomson@tnc.org	407-682-3664
Welstead, Gregg	WJW	Lake County Conservation & Compliance	315 West Main Street, Suite 520 Tavares , Florida 32778	gwelstead@lakecountyfl.gov	352-343-9106
Wilson, Mighk		Metroplan Orlando	315 E. Robinson St., Suite 355 Orlando, FL 32801-4321	mwilson@metroplanorlando.com	407-481-5672
INTERESTED CITIZENS:					
Arthur, Geoffrey TED ARTHUR	GA	Resident	1935 South Conway Road Orlando, Florida 32812	tedarthur@mac.com	407-273-4558
Carswell, Martha		Resident	130 Nova Drive Sanford, FL 32771	trisurvivr@aol.com	407-321-7188
Carter, Frank		Resident	110 Wekiva Park Drive Sanford, FL 32771	crbman@hotmail.com	407-332-7200
Hallauer, Steve		Resident	141 Nova Drive Sanford, FL 32771	steven_hallauer@att.net	407-688-1656
Maukonen, Donna	DM	Resident	120 Wekiva Park Drive Sanford, FL 32771	donna@donnamaukonen.com	407-302-8081
Roberts, Linda & Rick	RRL	Resident/Snook Foundation	5224 West SR 46, #102 Sanford, FL 32771	linda@snookfoundation.org	407-302-5550
MIKE MARTIN		~~DEP~~ FLORIDA Forest Service	—	—	352-366 6677
David Martin		Seminole County		dmartin02@seminolecountyfl.gov	407-656-5610
Rebecca Perry		The Nature Conservancy			
Suzanne Phillips	SDP	FDOT	District 5 719 S. Woodland	suzanne.phillips@—	943 5224
CHRIS FERRARO	COF	FDEP - Central District		chris.ferraro@dep.state.fl.us	407-897-4114

CONCEPTUAL DESIGN CHARETTE FOR THE WEKIVA RIVER BRIDGES

AGENDA
CHARETTE NO. 3
July 13, 2011
1:00 p.m. – 5:00 p.m.

1. Welcome and Introductions
2. Review the Summary Meeting Notes from Charette No. 2 on April 20, 2011
3. Review and Discuss the National Park Service Decision Tool – Outstanding Remarkable Values (ORV) Checklist
4. Review Stakeholder Bridge Concept Sketches from Charette No. 1 on March 3, 2011
5. Review and Evaluate Renderings of the Bridge Type Alternatives
   - Segmental Concrete Box Girder
     - On Alternatives C and D profiles
   - Strutted Segmental Concrete Box Girder
     - On Alternatives C and D profiles
   - Composite Steel Truss
     - On Alternatives C and D profiles
6. Select the Best Bridge Type
7. Review and Discuss Alternative Concepts/Profiles and Other Information Developed in Response to Stakeholder Input Received at Charette No. 2
   - Alternative C
     - Concept Description
     - Advantages and Challenges
   - Alternative D
     - Concept Description
     - Advantages and Challenges
   - Alternative E
     - Concept Description
     - Advantages and Challenges
8. Review and Discuss Results of the Noise Assessment
9. Select the Best Profile
10. Public Comments or Questions
11. Discuss Next Steps
12. Discuss Next Meeting Date
13. Adjourn

Appendix B
Drawings

Figure 1……Segmental Concrete Box Girder – Elevation and Typical Section

Figure 1A…… Segmental Concrete Box Girder – Main Pier Detail

Figure 2……... Strutted Segmental Concrete Box Girder – Elevation and Typical Section

Figure 2A…… Strutted Segmental Concrete Box Girder – Main Pier Detail

Figure 3……... Composite Steel Truss Bridge – Elevation and Typical Section

Figure 3A…… Composite Steel Truss Bridge – Main Pier Detail

Figure 4……... Typical Bridge Scheme – Approach Pier Detail

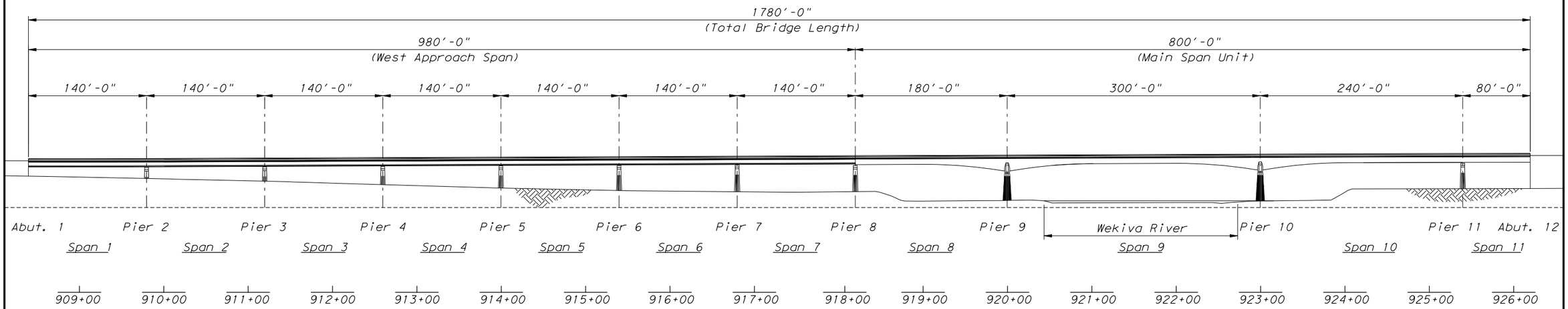

ELEVATION AND SPAN LAYOUT

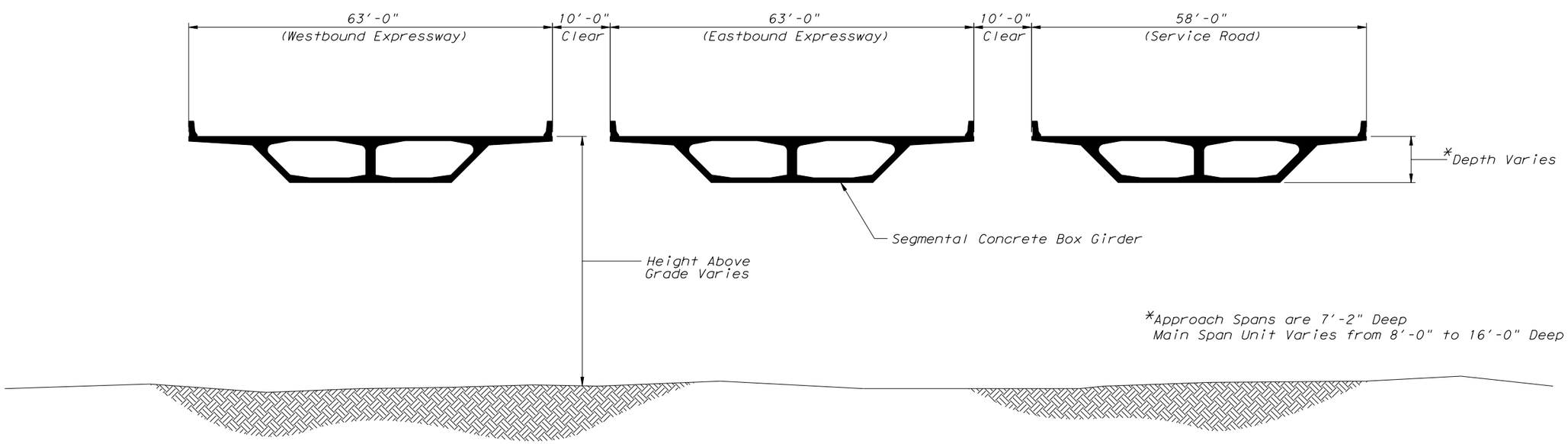

TYPICAL SECTION AT MAIN SPAN UNIT

FIGURE 1 **SEGMENTAL CONCRETE BOX GIRDER**
BRIDGE SCHEME 1 - ELEVATION & TYPICAL SECTION

JULY 13, 2011
WEKIVA RIVER BRIDGE STUDY

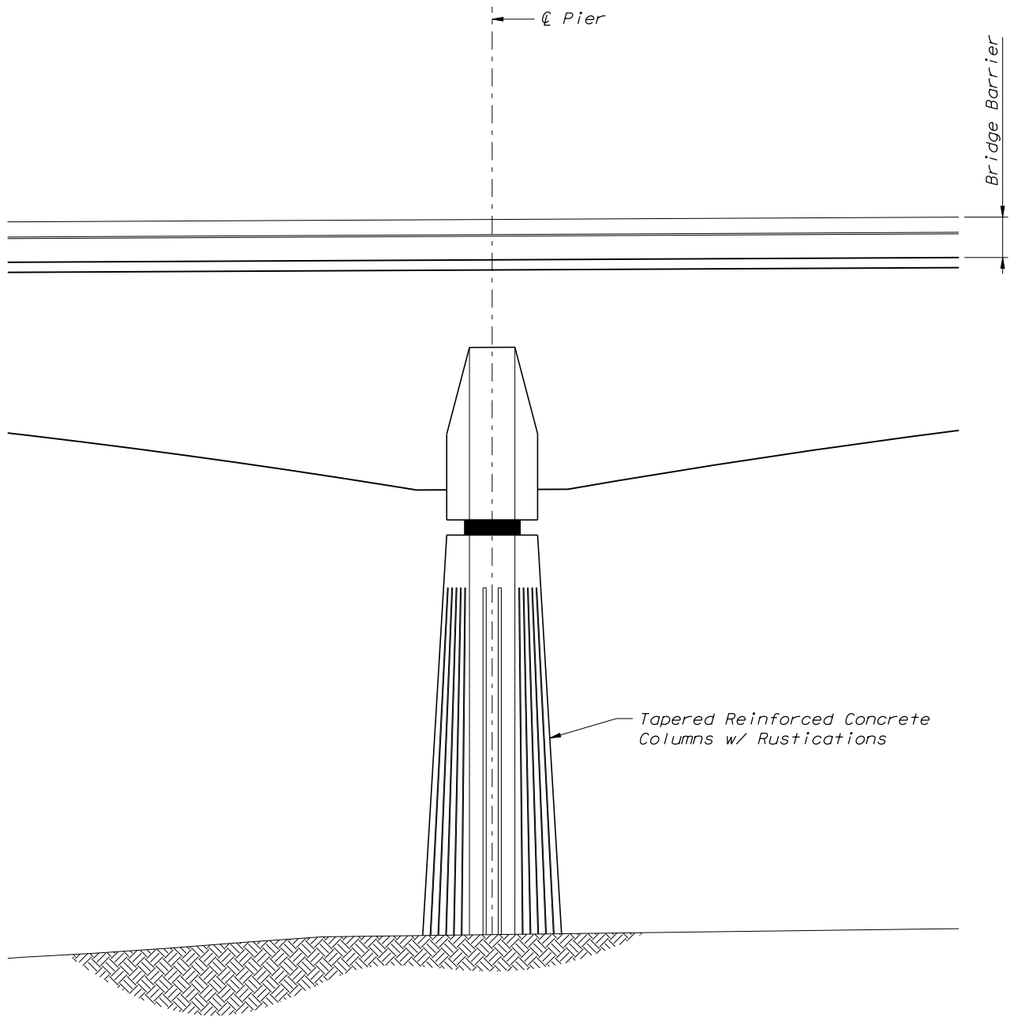

ELEVATION AT MAIN PIERS 9 & 10

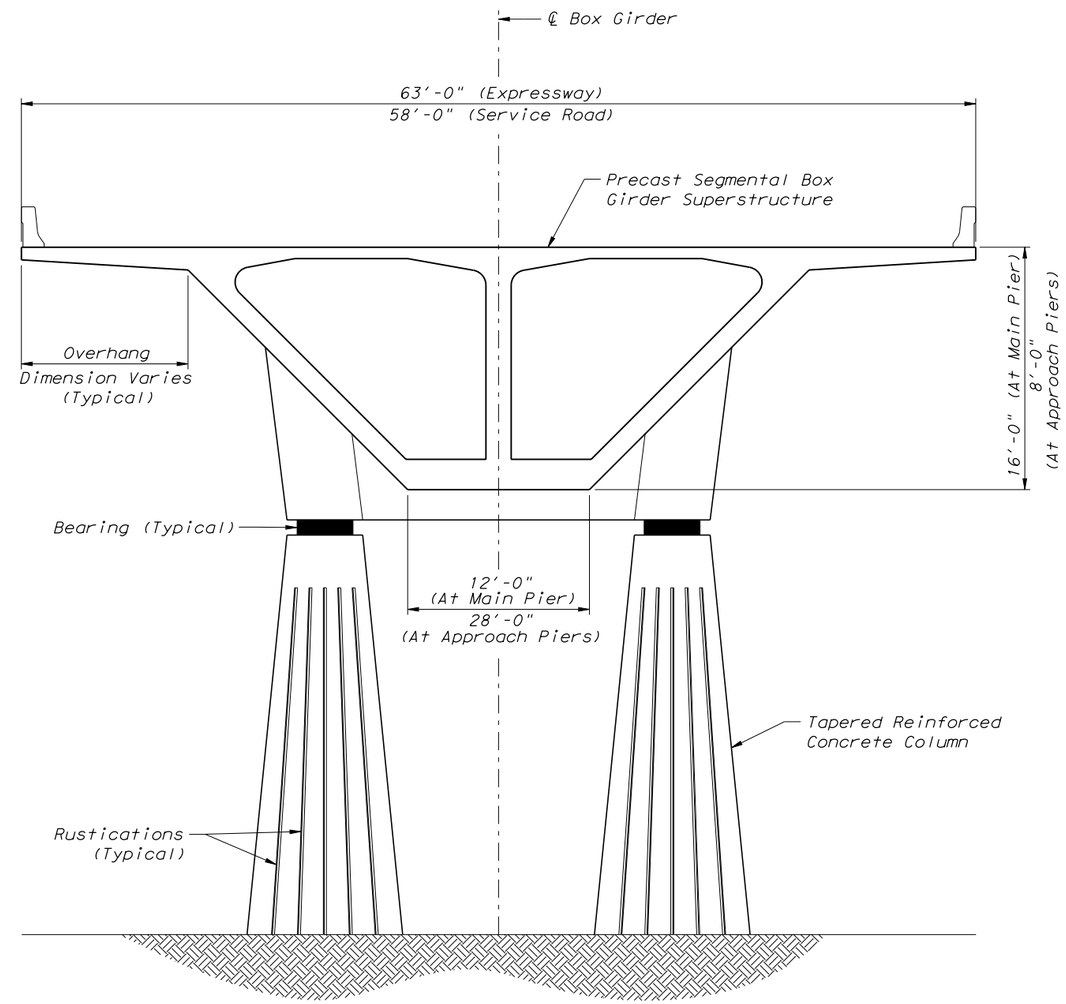

TYPICAL SECTION AT MAIN PIERS 9 & 10

FIGURE 1A **SEGMENTAL CONCRETE BOX GIRDER**
BRIDGE SCHEME 1 - MAIN PIER DETAIL

JULY 13, 2011
WEKIVA RIVER BRIDGE STUDY

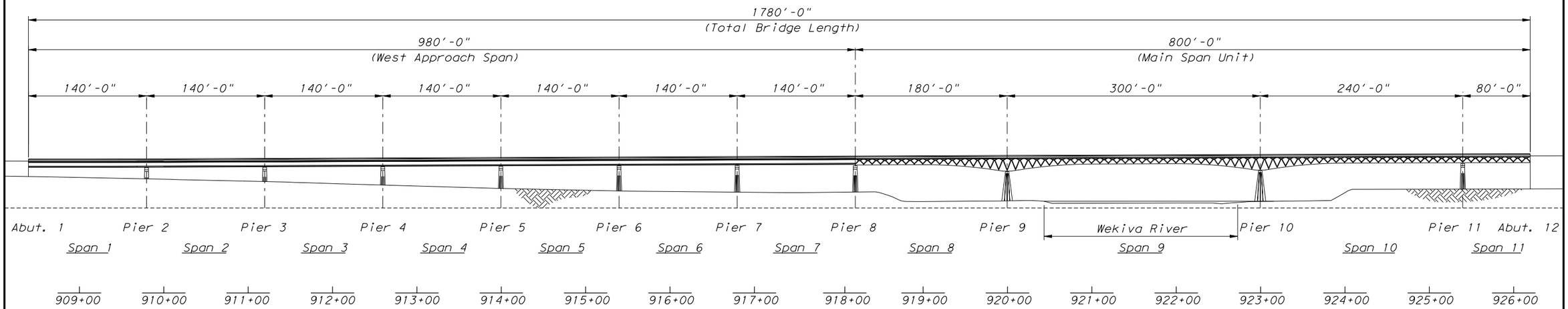

ELEVATION AND SPAN LAYOUT

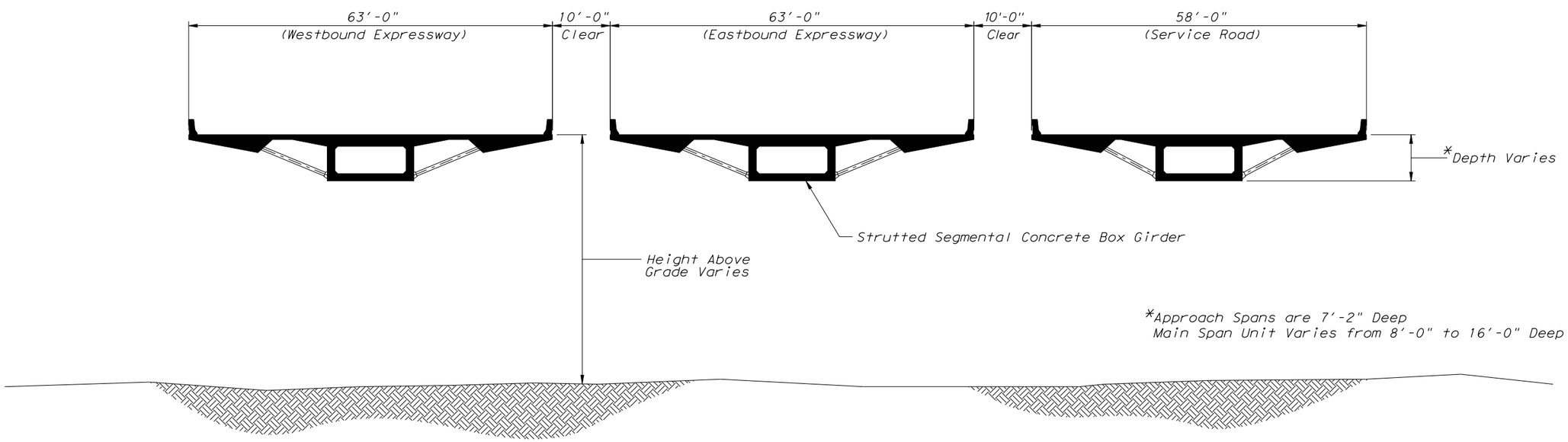

TYPICAL SECTION AT MAIN SPAN UNIT

FIGURE 2 **STRUTTED SEGMENTAL CONCRETE BOX GIRDER**
BRIDGE SCHEME 2 - ELEVATION & TYPICAL SECTION

JULY 13, 2011
WEKIVA RIVER BRIDGE STUDY

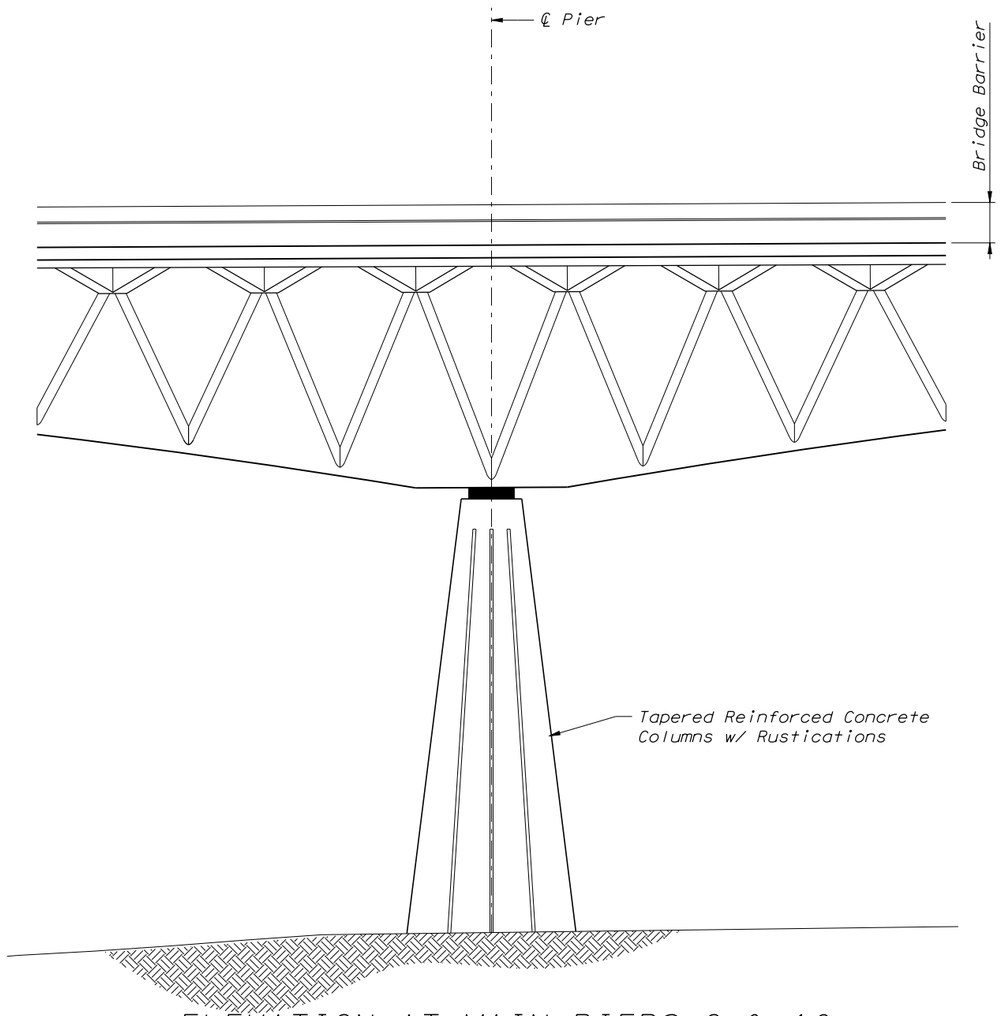

ELEVATION AT MAIN PIERS 9 & 10

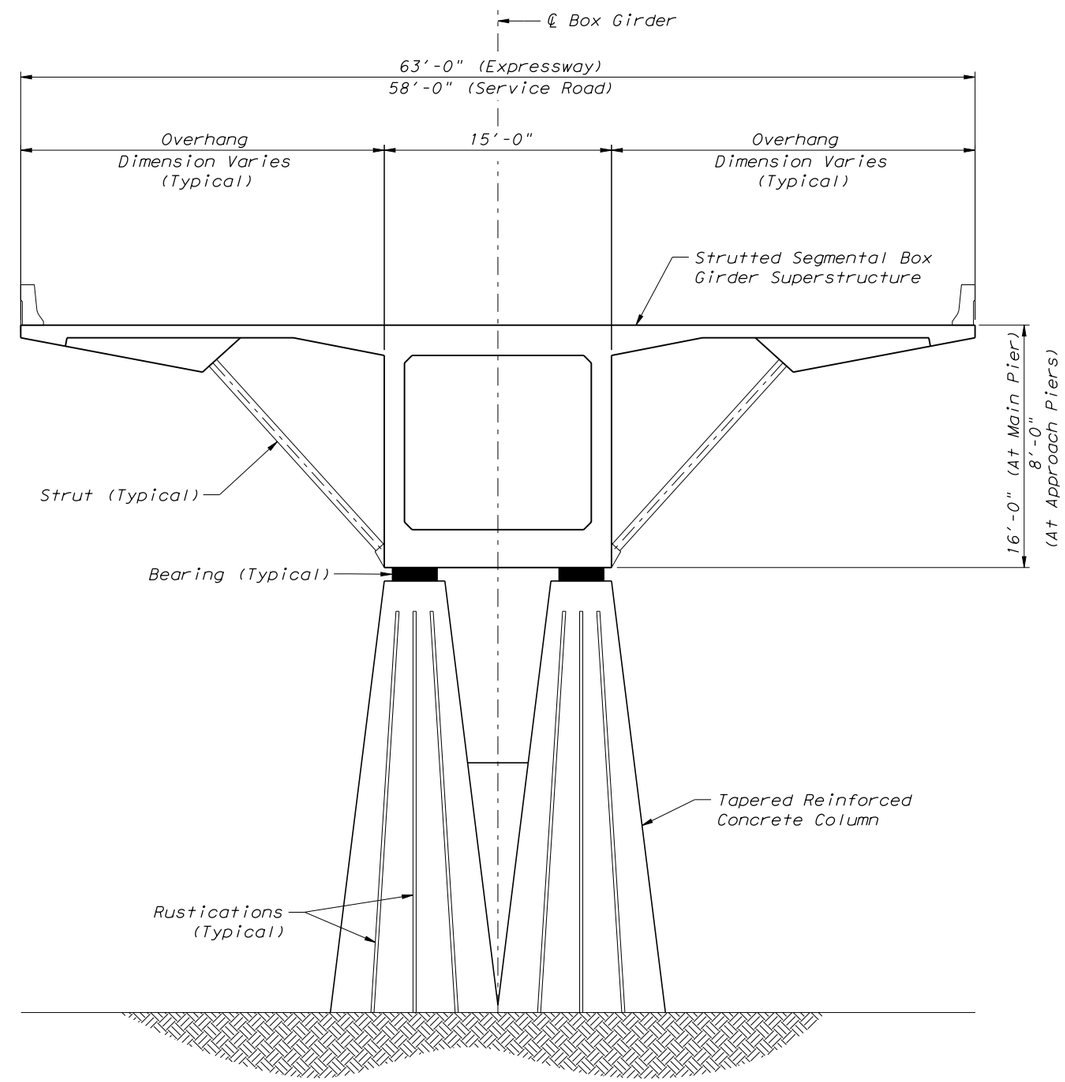

TYPICAL SECTION AT MAIN PIERS 9 & 10

FIGURE 2A **STRUTTED SEGMENTAL CONCRETE BOX GIRDER**
BRIDGE SCHEME 2 - MAIN PIER DETAIL

JULY 13, 2011
WEKIVA RIVER BRIDGE STUDY

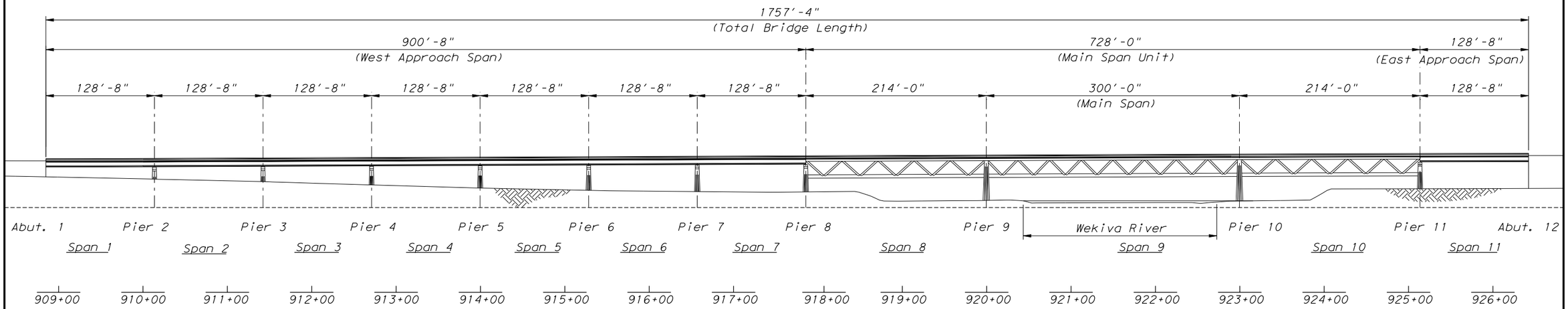

ELEVATION AND SPAN LAYOUT

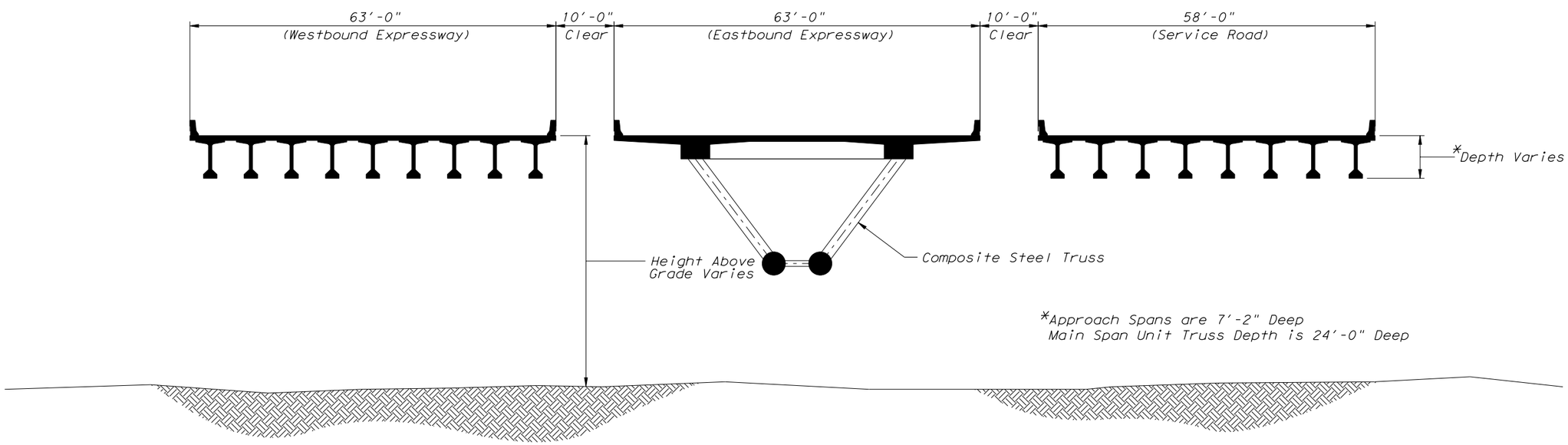

TYPICAL SECTION @ APPROACH TYPICAL SECTION @ MAIN SPAN TYPICAL SECTION @ APPROACH

FIGURE 3 **COMPOSITE STEEL TRUSS**
BRIDGE SCHEME 3 - ELEVATION & TYPICAL SECTION

JULY 13, 2011
WEKIVA RIVER BRIDGE STUDY

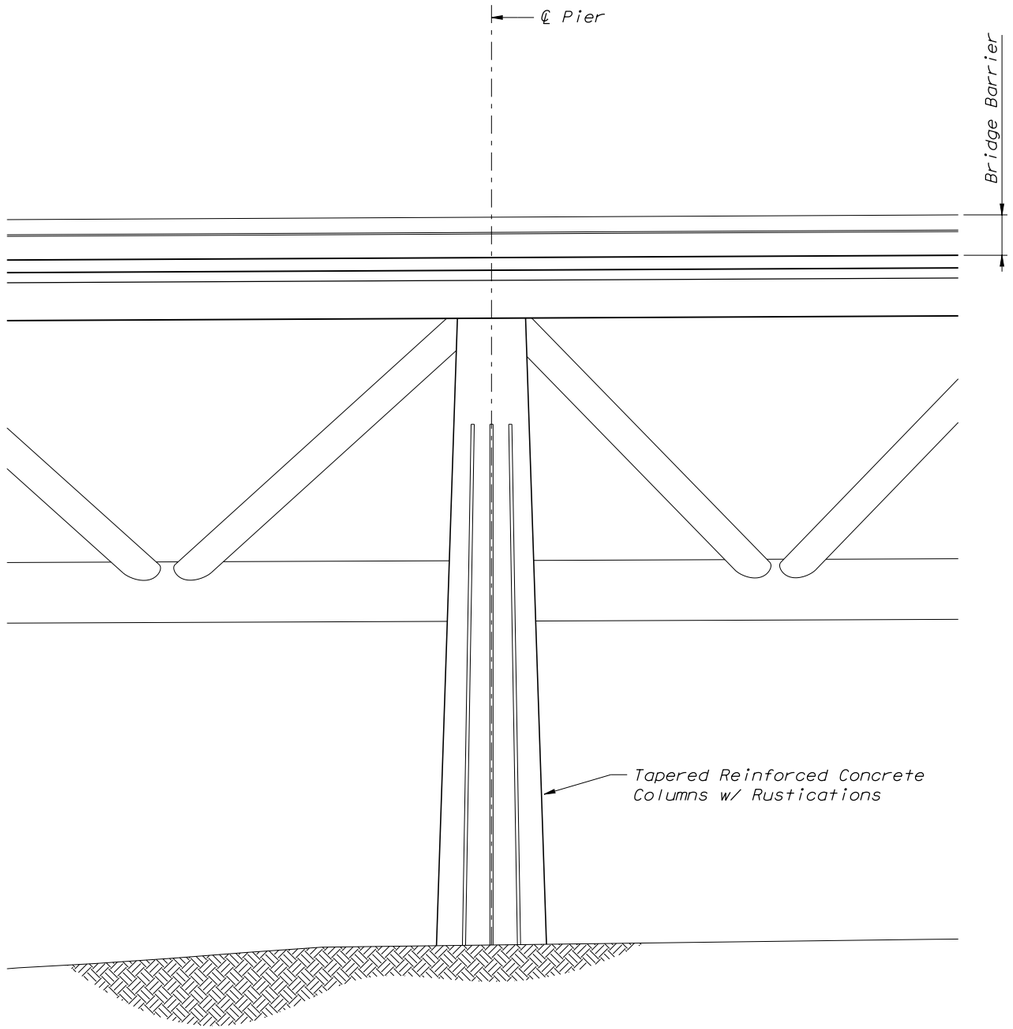

ELEVATION AT MAIN PIERS 9 & 10

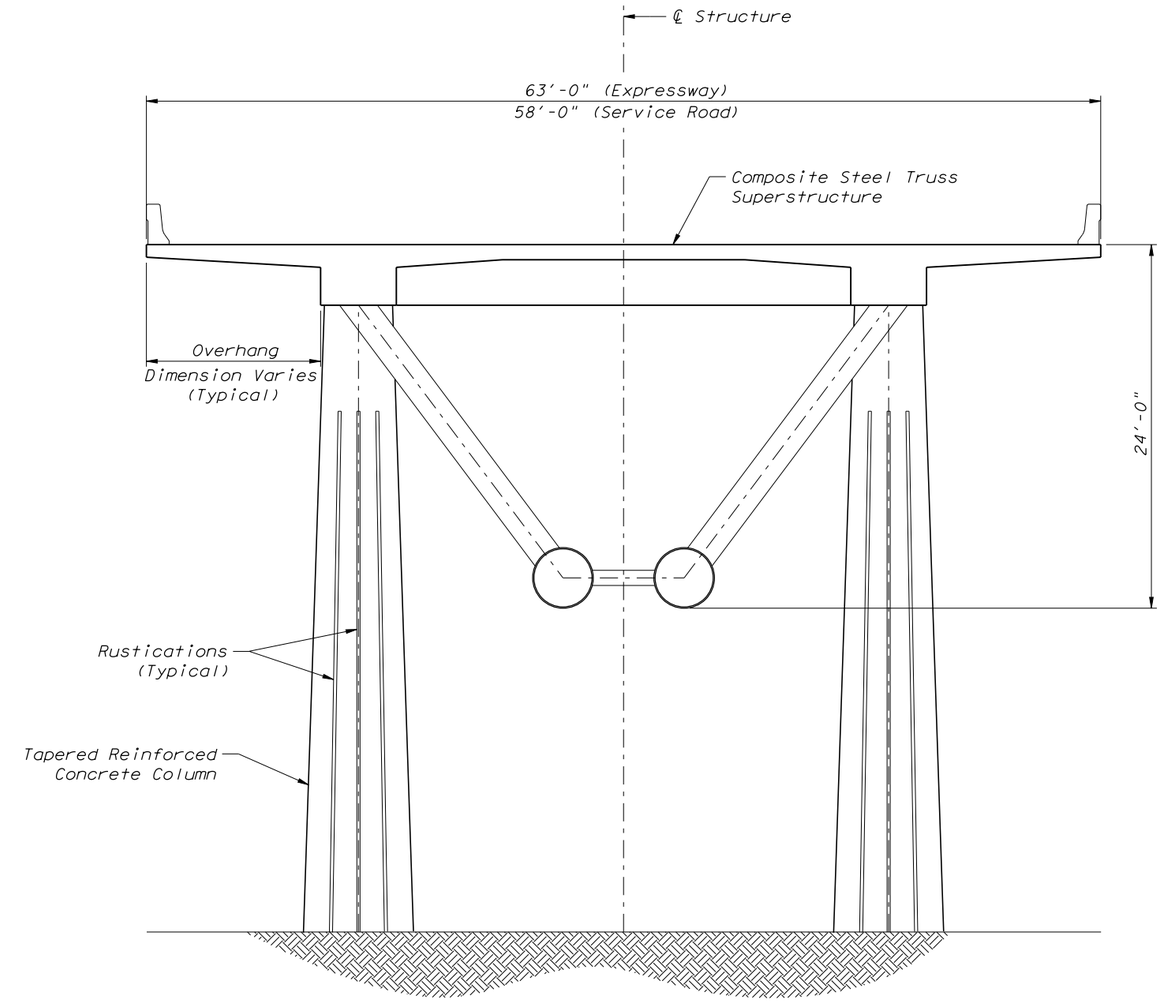

TYPICAL SECTION AT MAIN PIERS 9 & 10

FIGURE 3A **COMPOSITE STEEL TRUSS**
BRIDGE SCHEME 3 - MAIN PIER DETAIL

JULY 13, 2011
WEKIVA RIVER BRIDGE STUDY

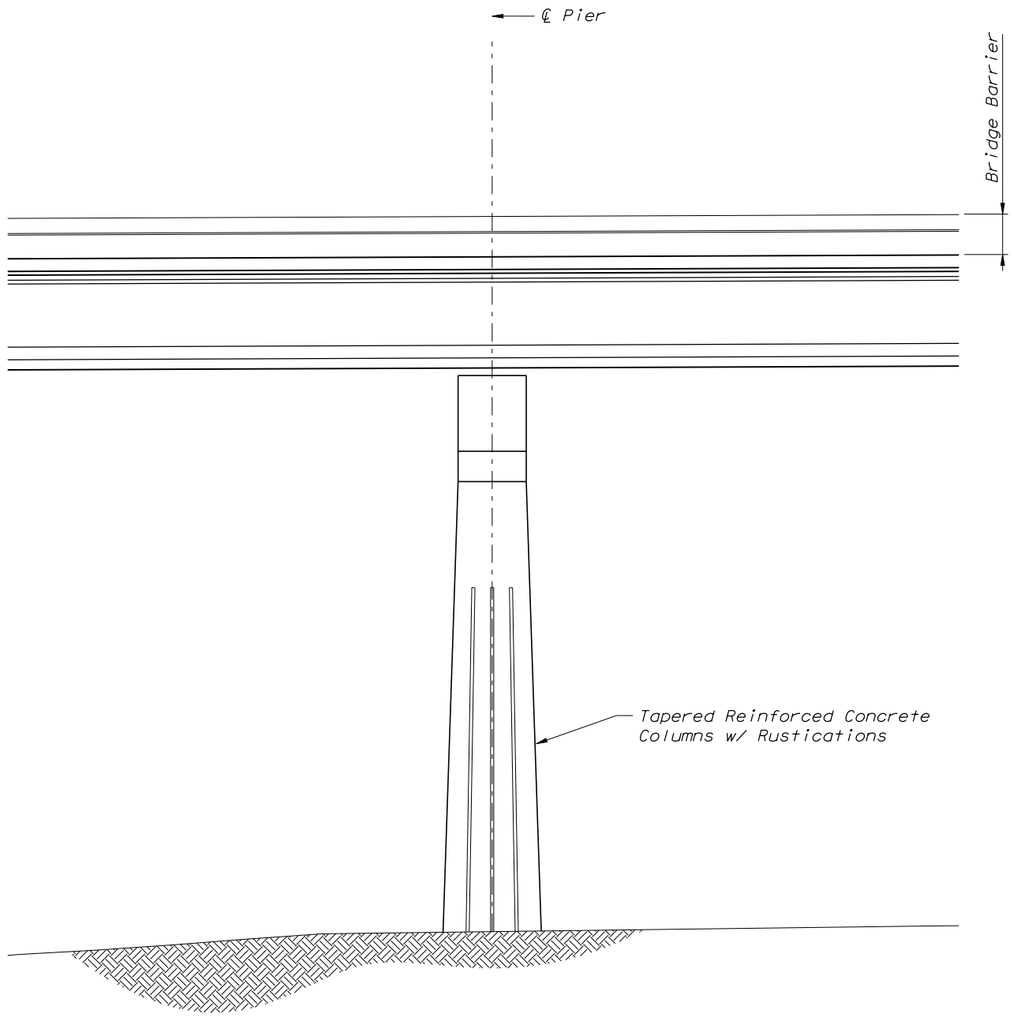

ELEVATION AT APPROACH PIERS

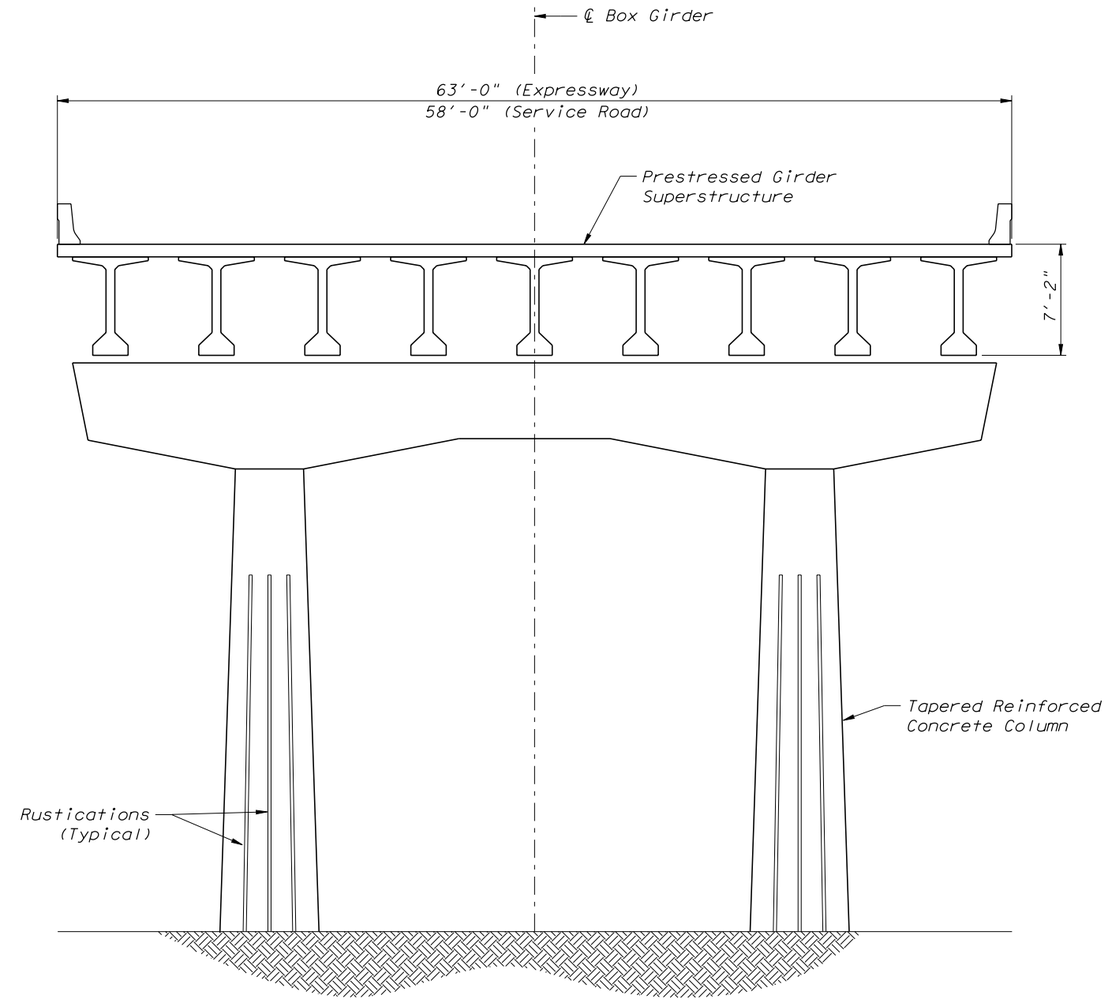

TYPICAL SECTION AT APPROACH PIERS

FIGURE 4
TYPICAL BRIDGE SCHEME - APPROACH PIER DETAIL

JULY 13, 2011
WEKIVA RIVER BRIDGE STUDY

Appendix C
Renderings

Exhibit 1……... Segmental Concrete Box Girder without fence

Exhibit 1A…… Segmental Concrete Box Girder with fence

Exhibit 2……... Strutted Segmental Concrete Box Girder without fence

Exhibit 2A…… Strutted Segmental Concrete Box Girder with fence

Exhibit 3……... Composite Steel Truss without fence

Exhibit 3A…… Composite Steel Truss with fence

Segmental Concrete Box Girder, Alternative D Profile, without fence

EXHIBIT 1

Segmental Concrete Box Girder, Alternative D Profile, with fence

EXHIBIT 1A

Strutted Segmental Concrete Box Girder, Alternative D Profile, without fence

EXHIBIT 2

Strutted Segmental Concrete Box Girder, Alternative D Profile, with fence

EXHIBIT 2A

Composite Steel Truss, Alternative D Profile, without fence

EXHIBIT 3

Composite Steel Truss, Alternative D Profile, with fence

EXHIBIT 3A

Appendix D
Basis of Conceptual Cost Estimate

WEKIVA RIVER BRIDGES
ORLANDO-ORANGE COUNTY EXPRESSWAY AUTHORITY
AND
FLORIDA DEPARTMENT OF TRANSPORTATION
Lake and Seminole Counties, Florida

BASIS OF ESTIMATE

Estimate ID:	110712
Project Name:	Wekiva Parkway
Class Estimate:	Class 4
Requested By:	Joe Showers/DEN
Estimated By:	John O'Reilly/SAC
Estimator Phone:	916.718.8916
Estimate Date:	July 13, 2011

John O'Reilly/SAC
ESTIMATOR

Project Team

Submitted to:

Joe Showers P.E.
Chief Bridge Engineer, CH2M Hill
9191 S Jamaica Street
Englewood, CO 80112
Phone 720.286.5275

Submitted by:

CH2M HILL Team:
John G. O'Reilly II
Chief Estimator
Phone 916.563.2598

Table

1 Preliminary Steel Truss Concept Quantities

2 Preliminary Strutted Box Girder Concept Quantities

3 Preliminary Segmental Box Girder Concept Quantities

Appendixes

A Summarized Cost Spreadsheets
B Drawings
C AACE Classification

Purpose of Estimate

The purpose of this Engineer's Estimate for Construction is to establish an Engineer's opinion of probable cost at 5% design for steel truss, strutted box girder and segmental box girder bridge concepts.

Project Location

The project site is located in Lake and Seminole Counties, Florida on proposed S.R. 429.

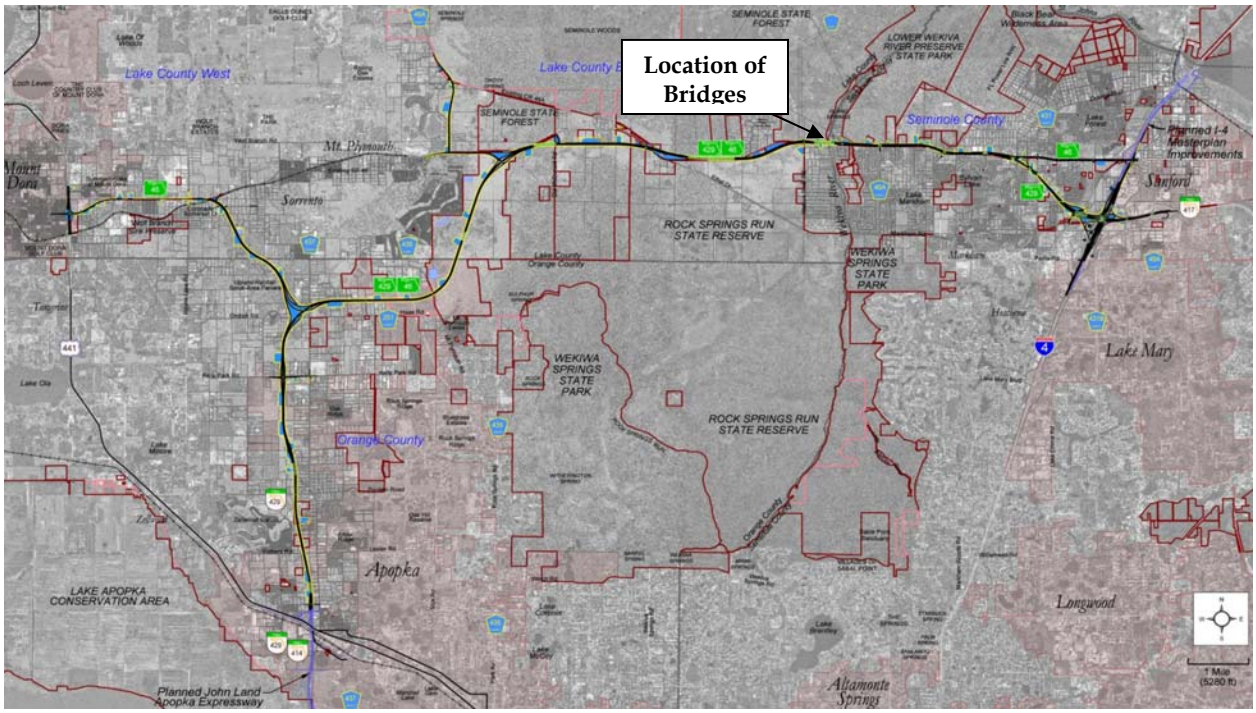

General Project Description

For the proposed Wekiva River bridges, there are three concepts being developed: Steel Truss, Strutted Segmental Concrete Box Girder, and Segmental Concrete Box Girder. Each concept has three structures: Eastbound Bridge, Westbound Bridge and Service Road Bridge.

Structure Concepts

Steel Truss Bridge including main span and approaches

- Westbound Structure Average Length 1,757(ft) x Width 63(ft)
- Eastbound Structure Average Length 1,757(ft) x Average Width 63(ft)
- Service Road Structure Average Length 1,757(ft) x Average Width 58(ft)

Table 1:
Steel truss Quantities

No.	Description	Unit	Quantity
	Main Span		
1	Barrier	LF	4,368
2	Deck Concrete	CY	6,201
3	Deck Rebar	LB	1,718,722
4	Structural Steel	LB	9,931,358
5	Post-Tensioning	LB	200,000
6	Pier/Ftg Concrete	CY	2,453
7	Pier/Ftg Rebar	LB	490,666
8	Piles	LF	35,280
	Approaches		
9	Barrier	LF	6,175
10	Deck Concrete	CY	5,845
11	Deck Rebar	LB	1,515,217
12	PC/PS Girders	LF	26,763
13	Pier/Ftg Concrete	CY	4,355
14	Pier/Ftg Rebar	LB	871,186
15	Piles	LF	46,080

Strutted Box Girder including main span and approaches

- Westbound Structure Average Length 1,780(ft) x Width 63(ft)
- Eastbound Structure Average Length 1,780(ft) x Average Width 63(ft)
- Service Road Structure Average Length 1,780(ft) x Average Width 58(ft)

Table 2:
Strutted Box Girder Quantities

No.	Description	Unit	Quantity
	Main Span		
1	Barrier	LF	4,320
2	Box Girder Concrete	CY	13,487
3	Box Girder Rebar	LB	3,371,731
4	Structural Steel - Strutts	LB	219,110
5	Post-Tensioning	LB	1,030,400
6	Pier/Ftg Concrete	CY	2,731
7	Pier/Ftg Rebar	LB	546,133
8	Piles	LF	69,136

	Approaches		
9	Barrier	LF	6,360
10	Deck Concrete	CY	5,565
11	Deck Rebar	LB	1,442,560
12	PC/PS Girders	LF	25,480
13	Pier/Ftg Concrete	CY	3,979
14	Pier/Ftg Rebar	LB	765,864
15	Piles	LF	43,300

Segmental Box Girder including main span and approaches

- Westbound Structure Average Length 1,780(ft) x Width 63(ft)
- Eastbound Structure Average Length 1,780(ft) x Average Width 63(ft)
- Service Road Structure Average Length 1,780(ft) x Average Width 58(ft)

Table 3:
Box Girder Quantities

No.	Description	Unit	Quantity
	Main Span		
1	Barrier	LF	4,320
2	Box Girder Concrete	CY	12,649
3	Box Girder Rebar	LB	3,162,291
4	Post-Tensioning	LB	1,030,400
5	Pier/Ftg Concrete	CY	2,731
6	Pier/Ftg Rebar	LB	546,133
7	Piles	LF	65,567
	Approaches		
9	Barrier	LF	6,360
10	Deck Concrete	CY	5,565
11	Deck Rebar	LB	1,442,560
12	PC/PS Girders	LF	25,480
13	Pier/Ftg Concrete	CY	3,979
14	Pier/Ftg Rebar	LB	765,864
15	Piles	LF	43,300

Overall Costs

The following is a summary breakdown of the costs. See attached breakdown for additional detailed information.

Steel Truss

Low Range	ESTIMATE	High Range
-20%	**Total**	+30%
$65,569,356	**$81,962,000**	$106,550,204

Strutted Box Girder

Low Range	ESTIMATE	High Range
-20%	**Total**	+30%
$52,612,800	**$65,766,000**	$85,495,800

Segmental Box Girder

Low Range	ESTIMATE	High Range
-20%	**Total**	+30%
$47,085,303	**$58,857,000**	$76,513,617

Scope of Work

Provide three concept level estimates based on the quantities that have generated.

Markups

The following typical contractor markups where applied to the Cost Estimate:

Contractor Overhead	0% included in unit prices
Profit	0% included in unit prices
Mobilization/Bond/Insurance	0% included in unit prices
Estimate Contingency	35%
Escalation Rate	Excluded (***Based 7-13-2011 dollars)***

Escalation Rate

Excluded

Estimate Classification

This cost estimate prepared is considered a Budget Level or Class 4 estimate as defined by the American Association of Cost Engineering (AACE). It is considered accurate to +30% to –20%, based upon a 5% design deliverable.

The cost estimates shown have been prepared for guidance in project evaluation and implementation from the information available at the time of the estimate. The final cost of the project will depend upon the actual labor and material costs, competitive market conditions, final project costs, implementation schedule and other variable factors. As a result, the final project costs will vary from the estimates presented herein. Because of this, project feasibility and funding needs must be carefully reviewed prior to making specific financial decisions to help ensure proper project evaluation and adequate funding. Our estimate is based FDOT historical data dated July, 2011.

Cost Resources

The following is a list of the various cost resources used in the development of the cost estimate.

- CH2M HILL Historical Data
- Florida Department of transportation (FDOT)
- Estimator Judgment

.

Estimate Methodology

Historical Bid-Based Estimate – This type of estimate tends to be a straightforward count or measure of units of items multiplied by unit costs. These unit costs are developed from historical FDOT project bids and may be modified to reflect project specific conditions. This is the most common type of estimating at FDOT.

Labor Costs

Excluded (Historical bid based estimate)

Sales Tax

Excluded (Historical bid based estimate).

Excluded Costs

The cost estimate excludes the following costs:

- Right of way
- Design, Construction Management
- Roadway, Traffic control, Removal Existing facilities
- Bridge Demolition

Reference Documents

See Appendix "B"

FIGURE 1 **SEGMENTAL CONCRETE BOX GIRDER**
- BRIDGE SCHEME 1 - ELEVATION & TYPICAL SECTION

FIGURE 1A **SEGMENTAL CONCRETE BOX GIRDER**
- BRIDGE SCHEME 1 - MAIN PIER DETAIL

FIGURE 2 **STRUTTED SEGMENTAL CONCRETE BOX GIRDER**
- BRIDGE SCHEME 2 - ELEVATION & TYPICAL SECTION

FIGURE 2A **STRUTTED SEGMENTAL CONCRETE BOX GIRDER**
- BRIDGE SCHEME 2 - MAIN PIER DETAIL

FIGURE 3 **COMPOSITE STEEL TRUSS**
- BRIDGE SCHEME 3 - ELEVATION & TYPICAL SECTION

FIGURE 3A **COMPOSITE STEEL TRUSS**
- BRIDGE SCHEME 3 - MAIN PIER DETAIL

FIGURE 4
- TYPICAL BRIDGE SCHEME - APPROACH PIER DETAIL

FIGURE 5
- CONSTRUCTION PHASING

Disclaimer

The opinions of cost (estimates) shown, and any resulting conclusions on project financial or economic feasibility or funding requirements, have been prepared for guidance in project evaluation and implementation from the information available at the time the opinion was prepared. The final costs of the project and resulting feasibility will depend on actual labor and material costs, competitive market conditions, actual site conditions, final project scope, implementation schedule, continuity of personnel and engineering, and other variable factors. The recent increases or decreases in material pricing may have a significant impact which is not predictable and careful review or consideration must be used in evaluation of material prices. As a result, the final project costs will vary from the opinions of cost presented herein. Because of these factors, project feasibility, benefit/cost ratios, risks, and funding needs must be carefully reviewed prior to making specific financial decisions or establishing project budgets to help ensure pro per project evaluation and adequate funding

APPENDIX A

Summarized Cost Spreadsheets

,	GENERAL PLAN ESTIMATE		ADVANCE PLANNING ESTIMATE

Revised - July 13, 2011

IN EST:	7/8/2011
OUT EST:	7/13/2011

BRIDGE:	Wekiva	**DISTRICT:**	05
TYPE:	Steel Truss	**RTE:**	SR46
		CO:	Orange County

Eastbound -Main Span LENGTH:	728.00	**WIDTH:**	63.00	**AREA (SF)=**	45,864
Westbound - Main Span LENGTH:	728.00	**WIDTH:**	63.00	**AREA (SF)=**	45,864
Service Rd. - Main Span LENGTH:	728.00	**WIDTH:**	58.00	**AREA (SF)=**	42,224
Eastbound Appraoches Span LENGTH:	1,029.32	**WIDTH:**	58.00	**AREA (SF)=**	59,701
Westbound - Appraoches Span LENGTH:	1,029.32	**WIDTH:**	63.00	**AREA (SF)=**	64,847
Service Rd. - Appraoches Span LENGTH:	1,029.32	**WIDTH:**	63.00	**AREA (SF)=**	64,847
				TOTAL AREA (SF)=	323,346.88

Concecpt Selection

# OF STRUCTURES IN PROJECT :	03	**EST. NO.**	110708A
PRICES BY : John O'Reilly		**COST INDEX:**	FDOT
PRICES CHECKED BY : Rick Hults		**DATE:**	July 8,2011
QUANTITIES BY: Joe Showers		**DATE:**	June 29 ,2011

	CONTRACT ITEMS	TYPE	QUANTITY	UNIT	PRICE	AMOUNT
	Main Span					
1	Barrier		4,368.00	LF	$65.00	$283,920.00
2	Deck Concrete		6,201.48	CY	$600.00	$3,720,888.89
3	Deck Rebar		1,718,727.11	LB	$0.90	$1,546,854.40
4	Structural Steel		9,931,358.66	LB	$3.20	$31,780,347.72
5	Post-Tensioning		200,000.00	LB	$2.50	$500,000.00
6	Pier/Ftg Concrete		2,453.33	CY	$450.00	$1,104,000.00
7	Pier/Ftg Rebar		490,666.67	LB	$0.90	$441,600.00
8	Piles		35,280.00	LF	$65.00	$2,293,200.00
	Approaches					
9	Barrier		6,175.92	LF	$65.00	$401,434.80
10	Deck Concrete		5,845.75	CY	$500.00	$2,922,874.07
11	Deck Rebar		1,515,217.92	LB	$0.90	$1,363,696.13
12	PC/PS Girders		26,763.36	LF	$330.00	$8,831,908.80
13	Pier/Ftg Concrete		4,355.93	CY	$400.00	$1,742,373.93
14	Pier/Ftg Rebar		871,186.96	LB	$0.90	$784,068.27
15	Piles		46,080.00	LF	$65.00	$2,995,200.00

SUBTOTAL		$60,712,367
SUBTOTAL BRIDGE ITEMS		$60,712,367
CONTINGENCIES	(@ 35%)	$21,249,328
BRIDGE TOTAL COST (2011/$)		$81,961,695
COST PER SF		**$253.48**
BRIDGE REMOVAL (Excluded)		
GRAND TOTAL		$81,961,695
BUDGET ESTIMATE AS OF	7/13/11	**$81,962,000**

COMMENTS: All unit prices were generated from FDOT data

Escalated Budget Estimate to Midpoint of Construction *

Escalation Rate per Year 3.0%

Years Beyond Midpoint	Escalated Budget Est.	Years Beyond Midpoint	Escalated Budget Est.
Jul-12	$84,421,000	4	$92,250,000
2	$86,954,000	5	$95,018,000
3	$89,563,000		

* Escalated budget estimate is provided for information only, actual construction costs may vary.

,	GENERAL PLAN ESTIMATE		ADVANCE PLANNING ESTIMATE

Revised - July 13, 2011

IN EST:	7/8/2011
OUT EST:	7/13/2011

BRIDGE:	Wekiva	**DISTRICT:**	05
TYPE:	Strutted Box Girder	**RTE:**	SR 429
		CO:	Orange County

Eastbound -Main Span LENGTH:	720.00	**WIDTH:**	63.00	**AREA (SF)=**	45,360
Westbound - Main Span LENGTH:	720.00	**WIDTH:**	63.00	**AREA (SF)=**	45,360
Service Rd. - Main Span LENGTH:	720.00	**WIDTH:**	58.00	**AREA (SF)=**	41,760
Eastbound Appraoches Span LENGTH:	1,060.00	**WIDTH:**	58.00	**AREA (SF)=**	61,480
Westbound - Appraoches Span LENGTH:	1,060.00	**WIDTH:**	63.00	**AREA (SF)=**	66,780
Service Rd. - Appraoches Span LENGTH:	1,060.00	**WIDTH:**	63.00	**AREA (SF)=**	66,780
				TOTAL AREA (SF)=	327,520.00

Concecpt Selection

# OF STRUCTURES IN PROJECT :	03	**EST. NO.**	110708A
PRICES BY : John O'Reilly		**COST INDEX:**	FDOT
PRICES CHECKED BY : Rick Hults		**DATE:**	July 8,2011
QUANTITIES BY: Joe Showers		**DATE:**	June 29 ,2011

	CONTRACT ITEMS	TYPE	UNIT	QUANTITY	PRICE	AMOUNT
	Main Span					
1	Barrier		LF	4,320	$65.00	$280,800.00
2	Box Girder Concrete		CY	13,487	$1,250.00	$16,858,652.80
3	Box Girder Rebar		LB	3,371,731	$0.90	$3,034,557.50
4	Structural Steel - Strutts		LB	219,110	$8.00	$1,752,883.20
5	Post-Tensioning		LB	1,030,400	$2.50	$2,576,000.00
6	Pier/Ftg Concrete		CY	2,731	$450.00	$1,228,800.00
7	Pier/Ftg Rebar		LB	546,133	$0.90	$491,520.00
8	Piles		LF	69,136	$65.00	$4,493,840.00
	Approaches					
9	Barrier		LF	6,360	$65.00	$413,400.00
10	Deck Concrete		CY	5,565	$500.00	$2,782,716.05
11	Deck Rebar		LB	1,442,560	$0.90	$1,298,304.00
12	PC/PS Girders		LF	25,480	$330.00	$8,408,400.00
13	Pier/Ftg Concrete		CY	3,979	$400.00	$1,591,787.26
14	Pier/Ftg Rebar		LB	765,864	$0.90	$689,277.60
15	Piles		LF	43,300	$65.00	$2,814,500.00

ROUTING

SUBTOTAL		$48,715,438
SUBTOTAL BRIDGE ITEMS		$48,715,438
CONTINGENCIES	(@ 35%)	$17,050,403
BRIDGE TOTAL COST		$65,765,842
COST PER SF		$200.80
BRIDGE REMOVAL (CONTINGENCIES INCL.)		
WORK BY RAILROAD OR UTILITY FORCES		
GRAND TOTAL		$65,765,842
BUDGET ESTIMATE AS OF	7/13/11	**$65,766,000**

COMMENTS: All unit prices were generated from FDOT data

Escalated Budget Estimate to Midpoint of Construction *

Escalation Rate per Year 3.0%

Years Beyond Midpoint	Escalated Budget Est.
1	$67,739,000
2	$69,771,000
3	$71,864,000
4	$74,020,000
5	$76,241,000

* Escalated budget estimate is provided for information only, actual construction costs may vary.

,	GENERAL PLAN ESTIMATE		ADVANCE PLANNING ESTIMATE

Revised - July 13, 2011

IN EST:	7/8/2011
OUT EST:	7/13/2011

BRIDGE:	Wekiva	**DISTRICT:**	05
TYPE:	Segemental Concrete Box Girder	**RTE:**	SR 429
		CO:	Orange County

Eastbound -Main Span LENGTH:	720.00	**WIDTH:**	63.00	**AREA (SF)=**	45,360
Westbound - Main Span LENGTH:	720.00	**WIDTH:**	63.00	**AREA (SF)=**	45,360
Service Rd. - Main Span LENGTH:	720.00	**WIDTH:**	58.00	**AREA (SF)=**	41,760
Eastbound Appraoches Span LENGTH:	1,060.00	**WIDTH:**	58.00	**AREA (SF)=**	61,480
Westbound - Appraoches Span LENGTH:	1,060.00	**WIDTH:**	63.00	**AREA (SF)=**	66,780
Service Rd. - Appraoches Span LENGTH:	1,060.00	**WIDTH:**	63.00	**AREA (SF)=**	66,780
				TOTAL AREA (SF)=	327,520.00

Concecpt Selection			
# OF STRUCTURES IN PROJECT :	03	**EST. NO.**	110708A
PRICES BY : John O'Reilly		**COST INDEX:**	FDOT
PRICES CHECKED BY : Rick Hults		**DATE:**	July 8,2011
QUANTITIES BY: Joe Showers		**DATE:**	June 29 ,2011

	CONTRACT ITEMS	TYPE	UNIT	QUANTITY	PRICE	AMOUNT
	Main Span					
1	Barrier		LF	4,320	$65.00	$280,800.00
2	Box Girder Concrete		CY	12,649	$1,100.00	$13,914,080.62
3	Box Girder Rebar		LB	3,162,291	$0.90	$2,846,061.94
4	Post-Tensioning		LB	1,030,400	$2.50	$2,576,000.00
5	Pier/Ftg Concrete		CY	2,731	$450.00	$1,228,800.00
6	Pier/Ftg Rebar		LB	546,133	$0.90	$491,520.00
7	Piles		LF	65,567	$65.00	$4,261,855.00
	Approaches					
8	Barrier		LF	6,360	$65.00	$413,400.00
9	Deck Concrete		CY	5,565	$500.00	$2,782,716.05
10	Deck Rebar		LB	1,442,560	$0.90	$1,298,304.00
11	PC/PS Girders		LF	25,480	$330.00	$8,408,400.00
12	Pier/Ftg Concrete		CY	3,979	$400.00	$1,591,787.26
13	Pier/Ftg Rebar		LB	765,864	$0.90	$689,277.60
14	Piles		LF	43,300	$65.00	$2,814,500.00

SUBTOTAL		$43,597,502
SUBTOTAL BRIDGE ITEMS		$43,597,502
CONTINGENCIES	(@ 35%)	$15,259,126
BRIDGE TOTAL COST		$58,856,628
COST PER SF		$179.70
BRIDGE REMOVAL (CONTINGENCIES INCL.)		
WORK BY RAILROAD OR UTILITY FORCES		
GRAND TOTAL		$58,856,628
BUDGET ESTIMATE AS OF	7/13/11	**$58,857,000**

COMMENTS: All unit prices were generated from FDOT data

Escalated Budget Estimate to Midpoint of Construction *

Escalation Rate per Year 3.0%

Years Beyond Midpoint	Escalated Budget Est.
1	$60,623,000
2	$62,442,000
3	$64,315,000

Years Beyond Midpoint	Escalated Budget Est.
4	$66,244,000
5	$68,231,000

* Escalated budget estimate is provided for information only, actual construction costs may vary.

APPENDIX B

Drawings

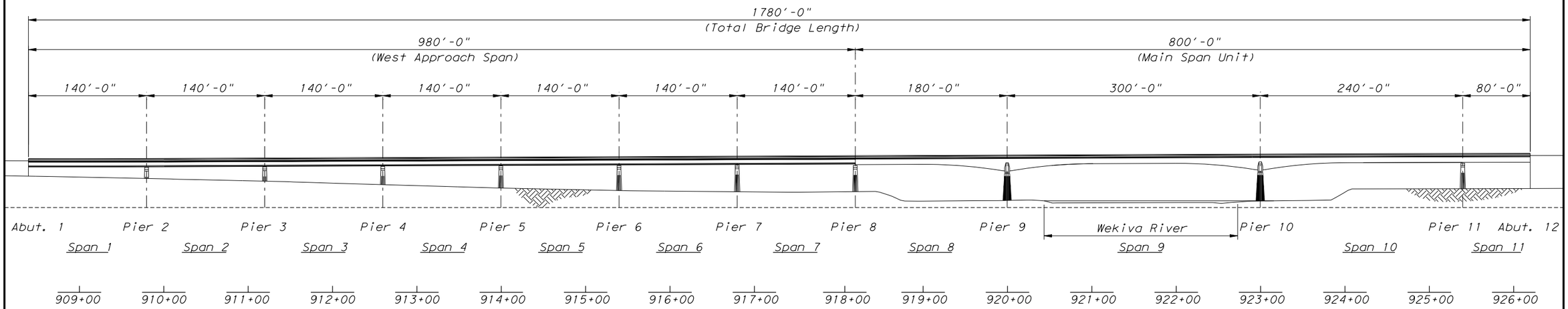

ELEVATION AND SPAN LAYOUT

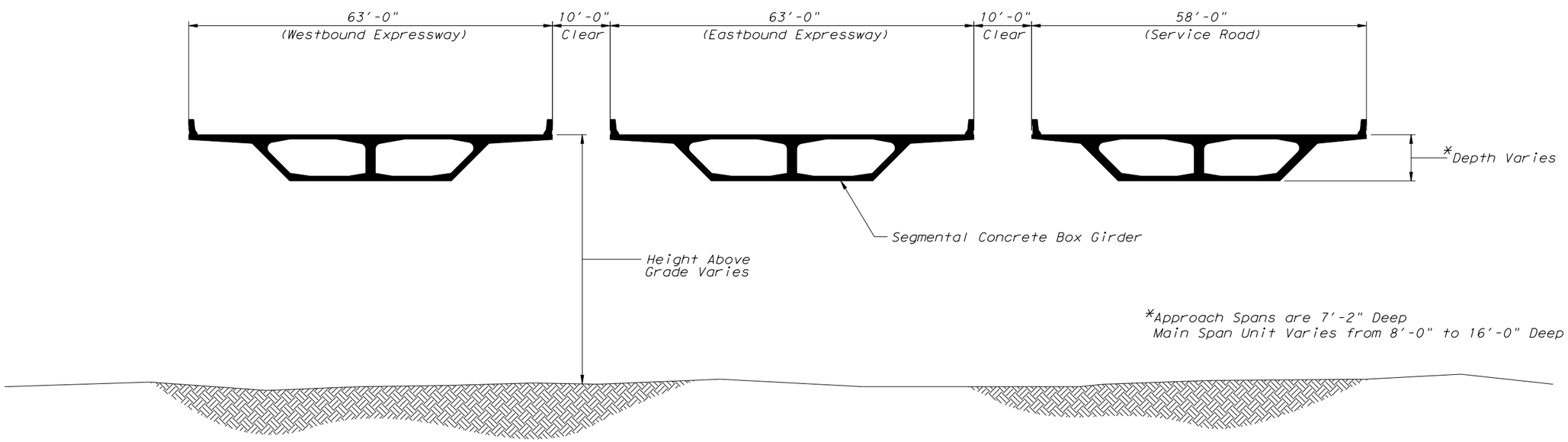

TYPICAL SECTION AT MAIN SPAN UNIT

FIGURE 1 **SEGMENTAL CONCRETE BOX GIRDER**
BRIDGE SCHEME 1 - ELEVATION & TYPICAL SECTION

JULY 13, 2011
WEKIVA RIVER BRIDGE STUDY

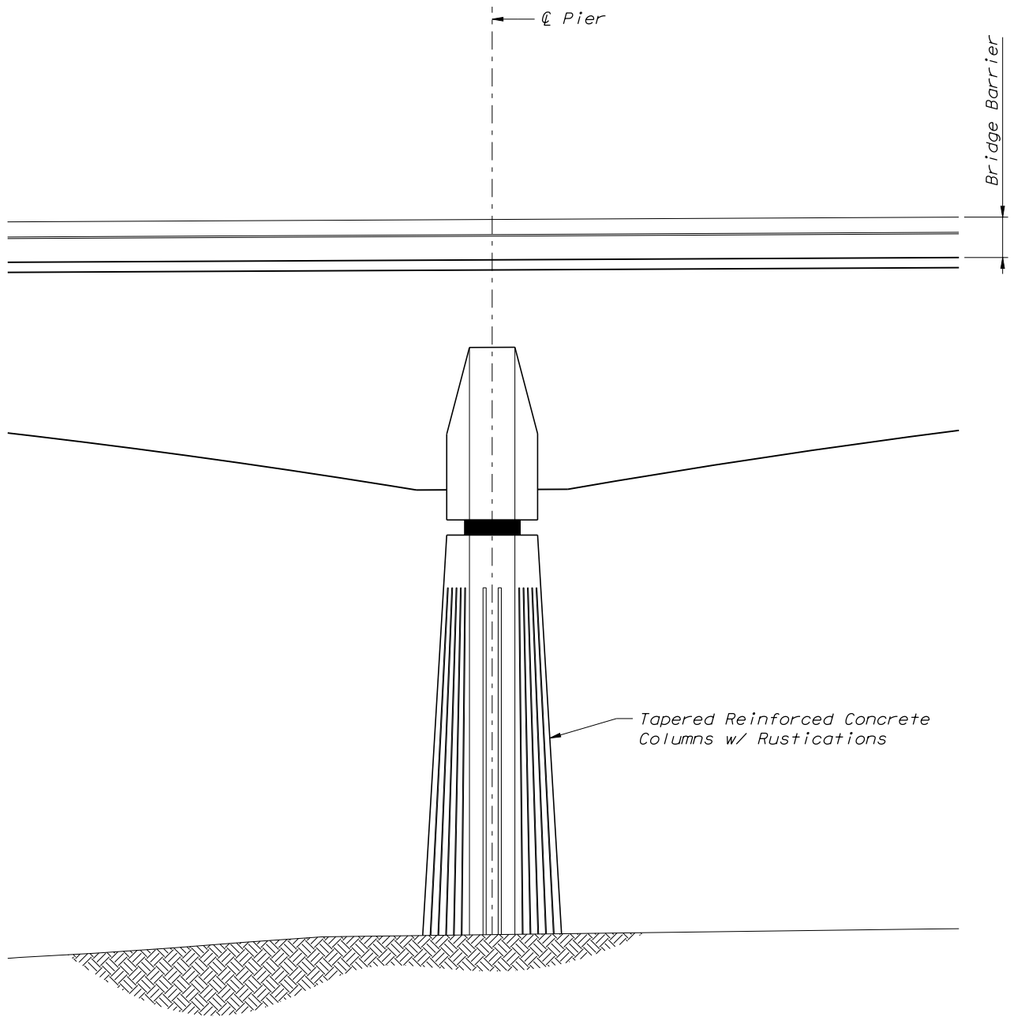

ELEVATION AT MAIN PIERS 9 & 10

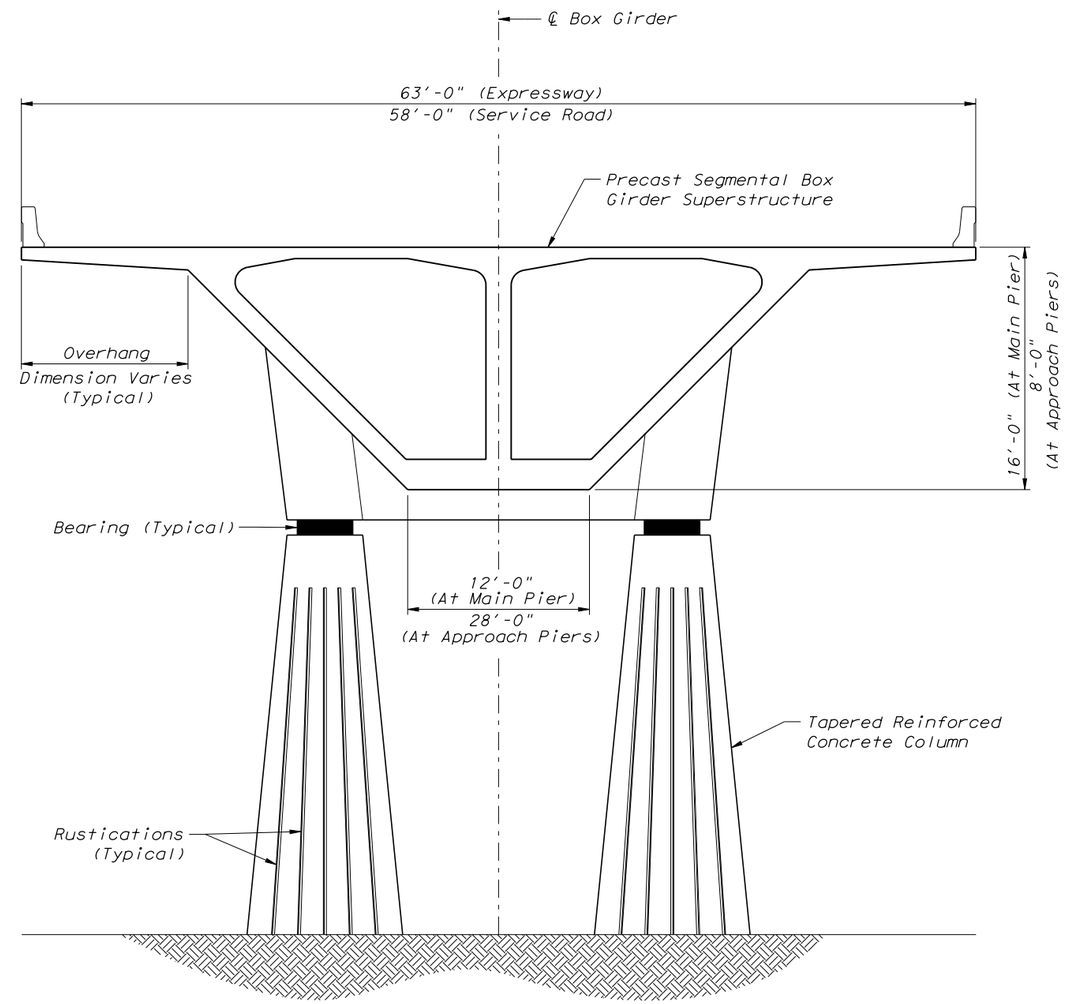

TYPICAL SECTION AT MAIN PIERS 9 & 10

FIGURE 1A **SEGMENTAL CONCRETE BOX GIRDER**
BRIDGE SCHEME 1 - MAIN PIER DETAIL

JULY 13, 2011
WEKIVA RIVER BRIDGE STUDY

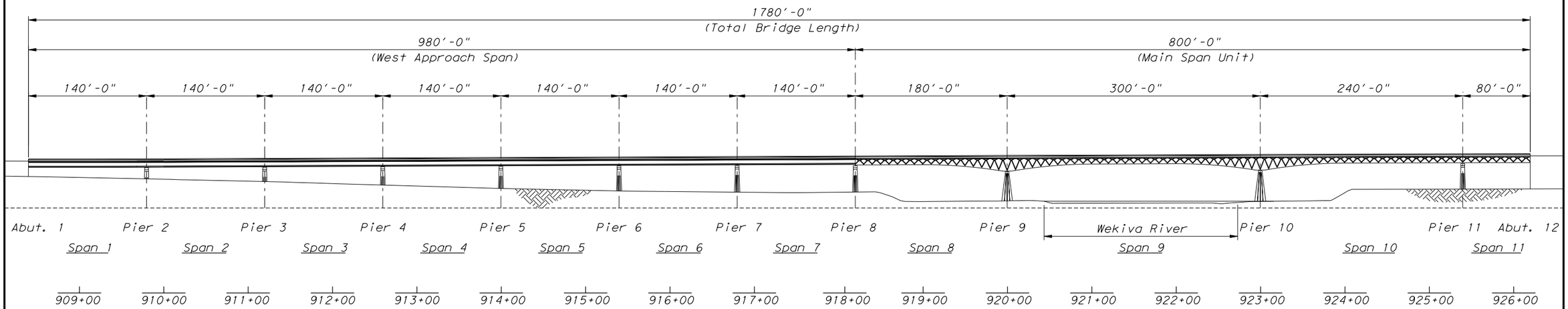

ELEVATION AND SPAN LAYOUT

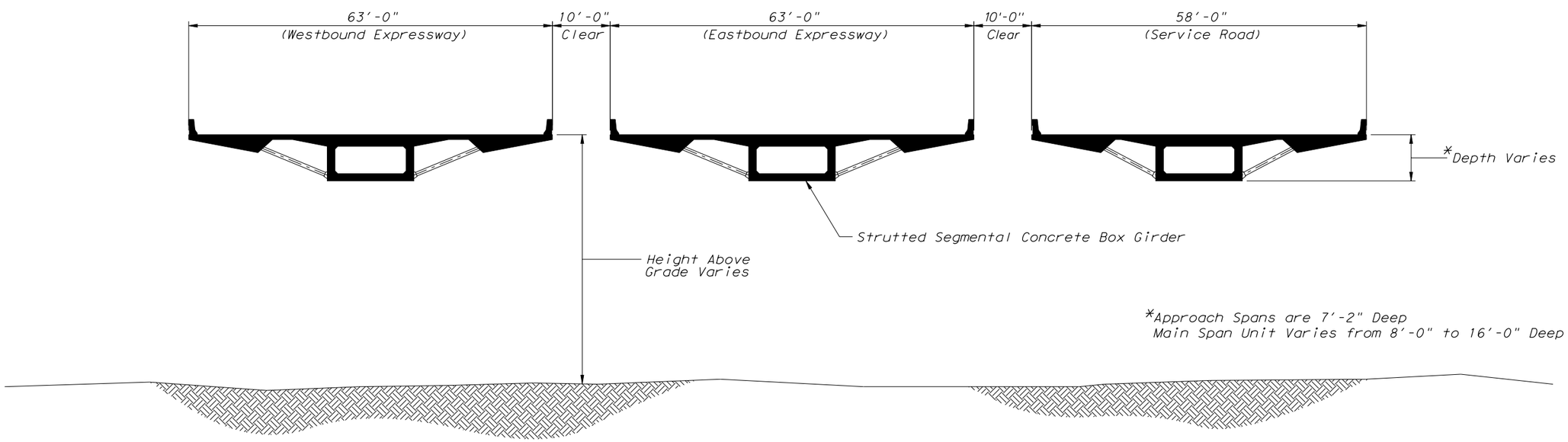

TYPICAL SECTION AT MAIN SPAN UNIT

FIGURE 2 **STRUTTED SEGMENTAL CONCRETE BOX GIRDER**
BRIDGE SCHEME 2 - ELEVATION & TYPICAL SECTION

JULY 13, 2011
WEKIVA RIVER BRIDGE STUDY

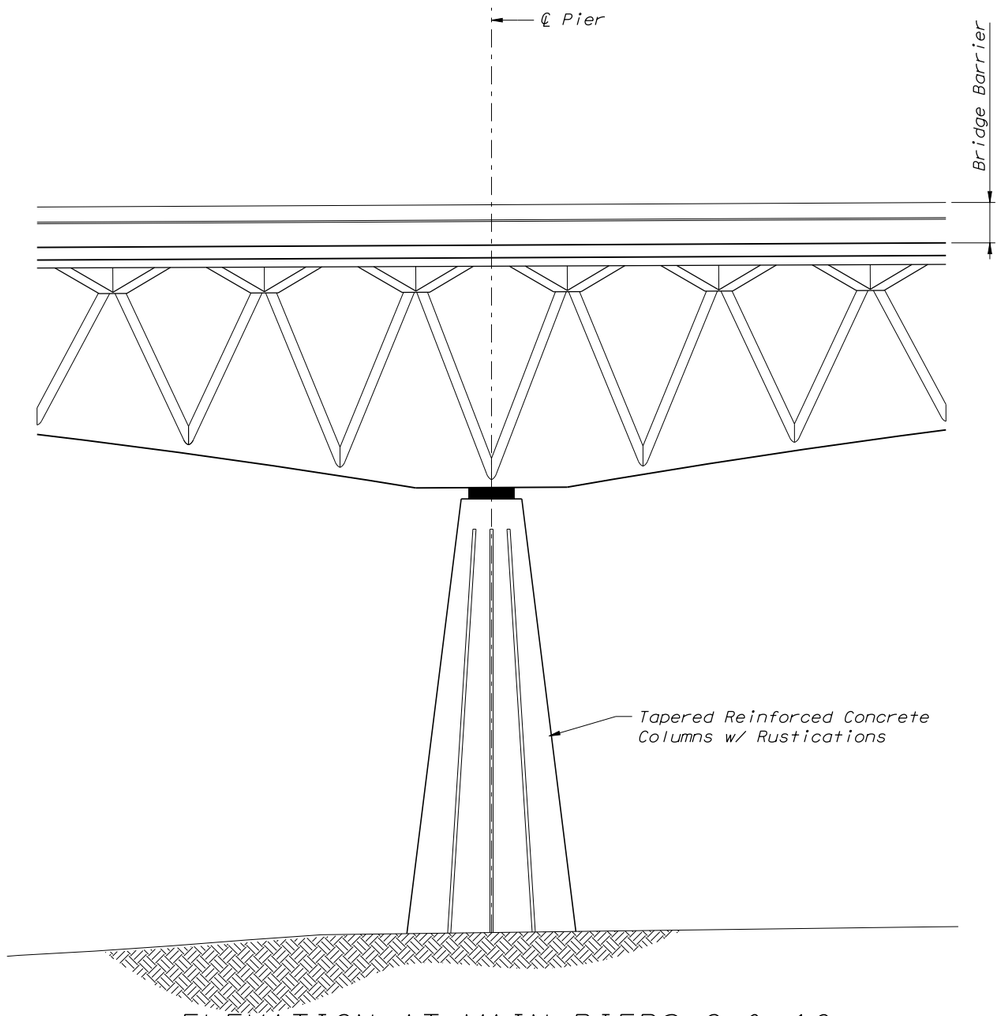

ELEVATION AT MAIN PIERS 9 & 10

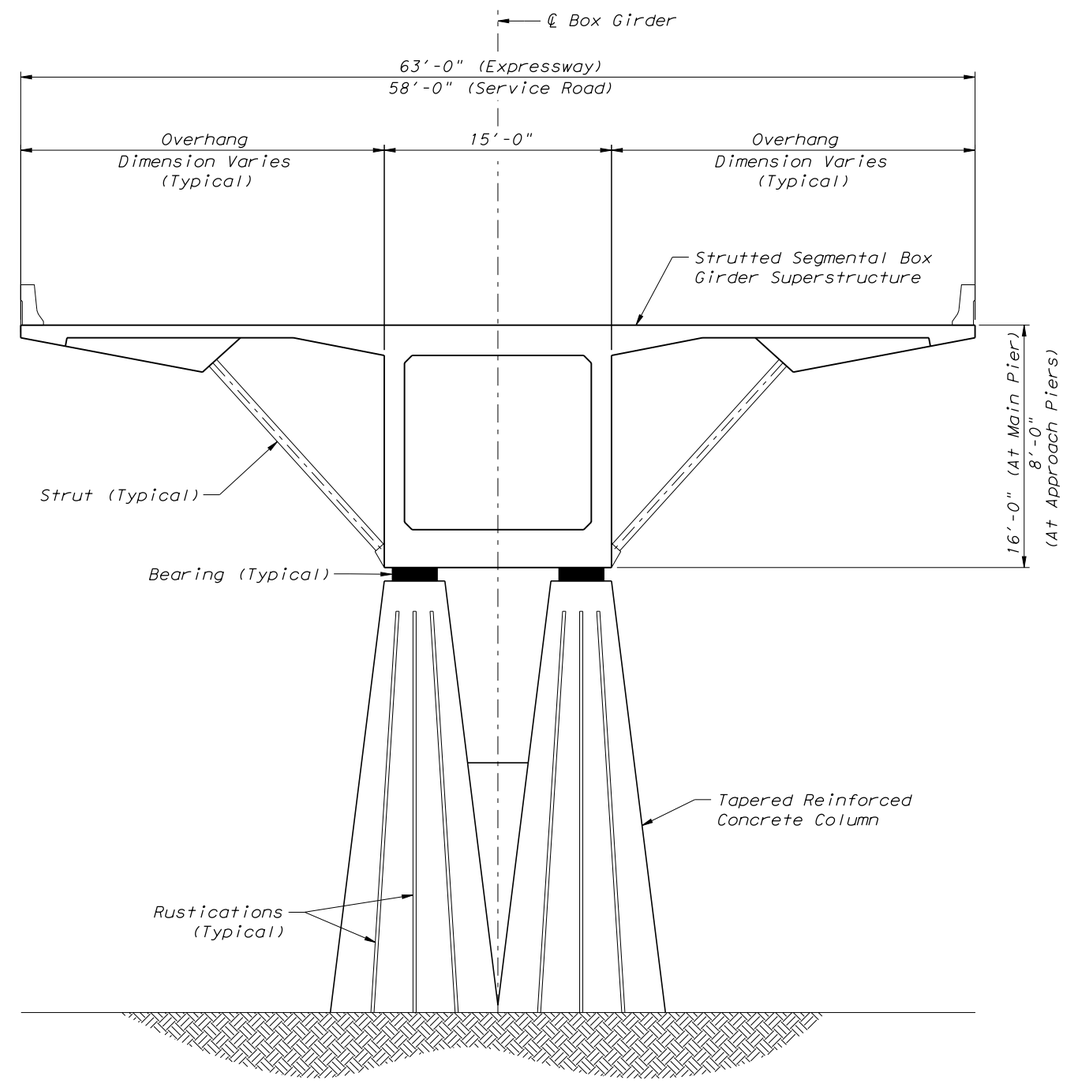

TYPICAL SECTION AT MAIN PIERS 9 & 10

FIGURE 2A **STRUTTED SEGMENTAL CONCRETE BOX GIRDER**
BRIDGE SCHEME 2 - MAIN PIER DETAIL

JULY 13, 2011
WEKIVA RIVER BRIDGE STUDY

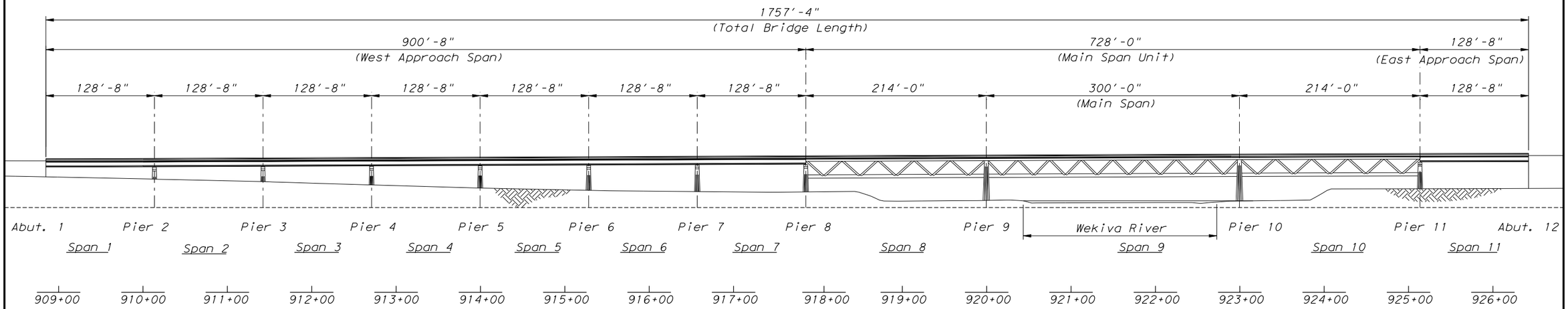

ELEVATION AND SPAN LAYOUT

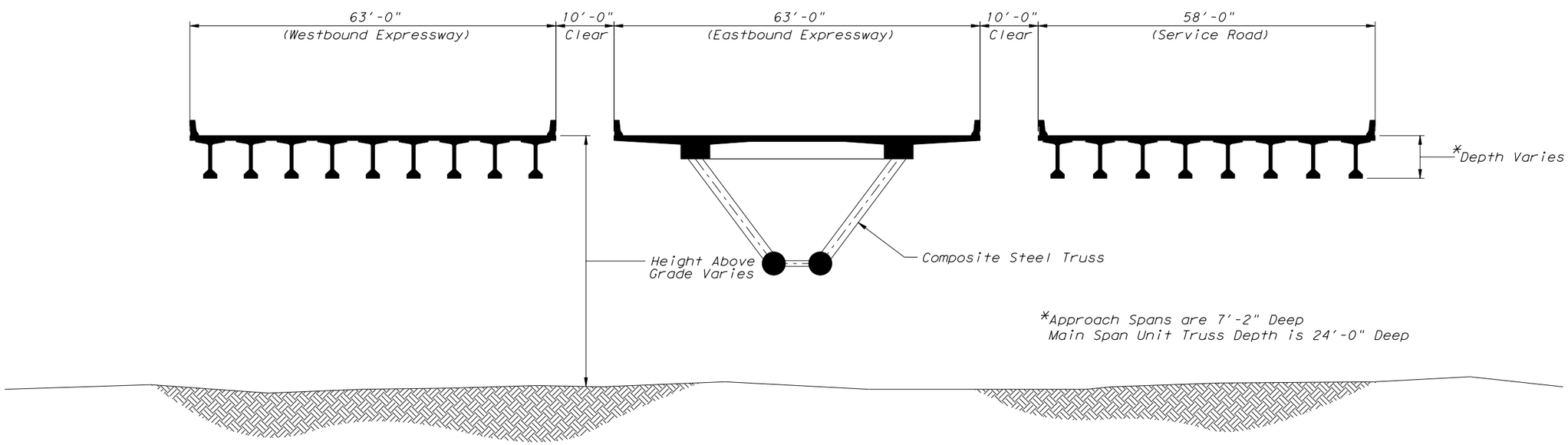

TYPICAL SECTION @ APPROACH TYPICAL SECTION @ MAIN SPAN TYPICAL SECTION @ APPROACH

FIGURE 3 **COMPOSITE STEEL TRUSS**
BRIDGE SCHEME 3 - ELEVATION & TYPICAL SECTION

JULY 13, 2011
WEKIVA RIVER BRIDGE STUDY

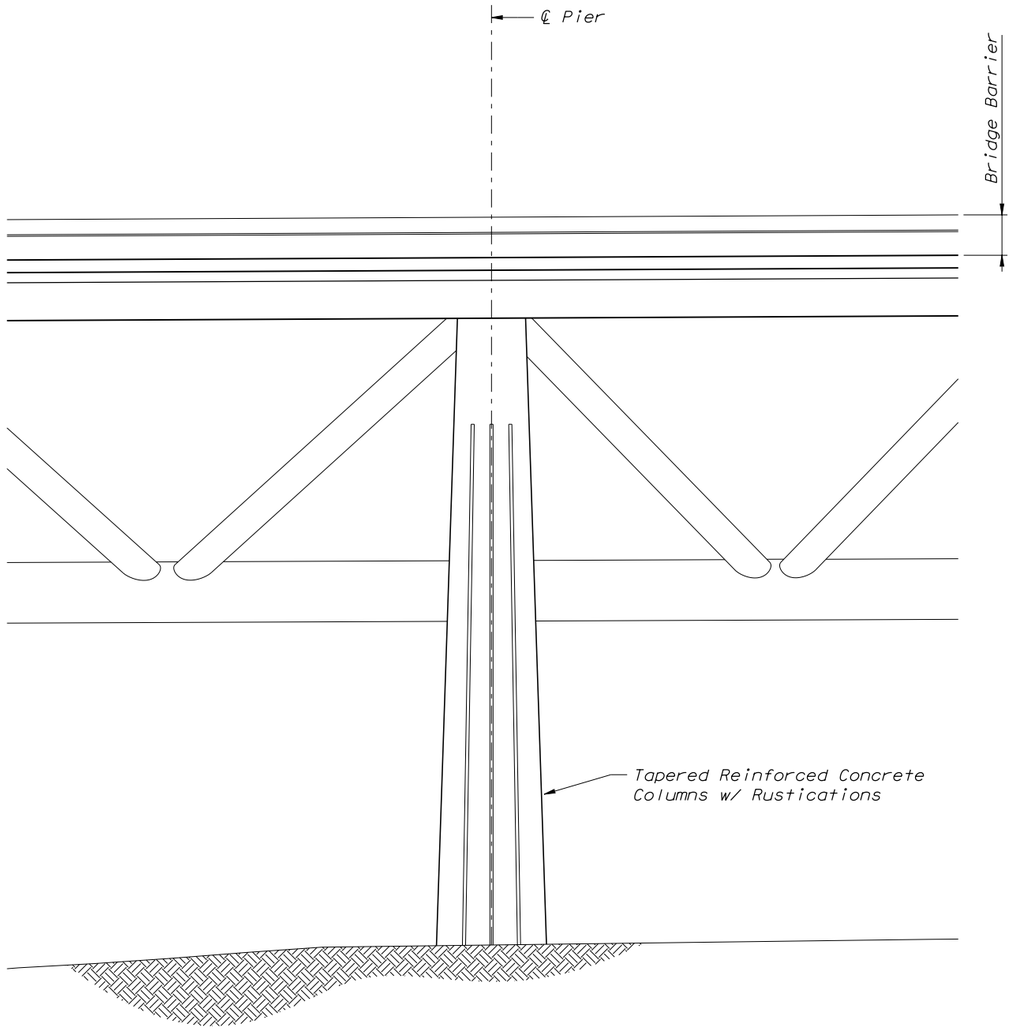

ELEVATION AT MAIN PIERS 9 & 10

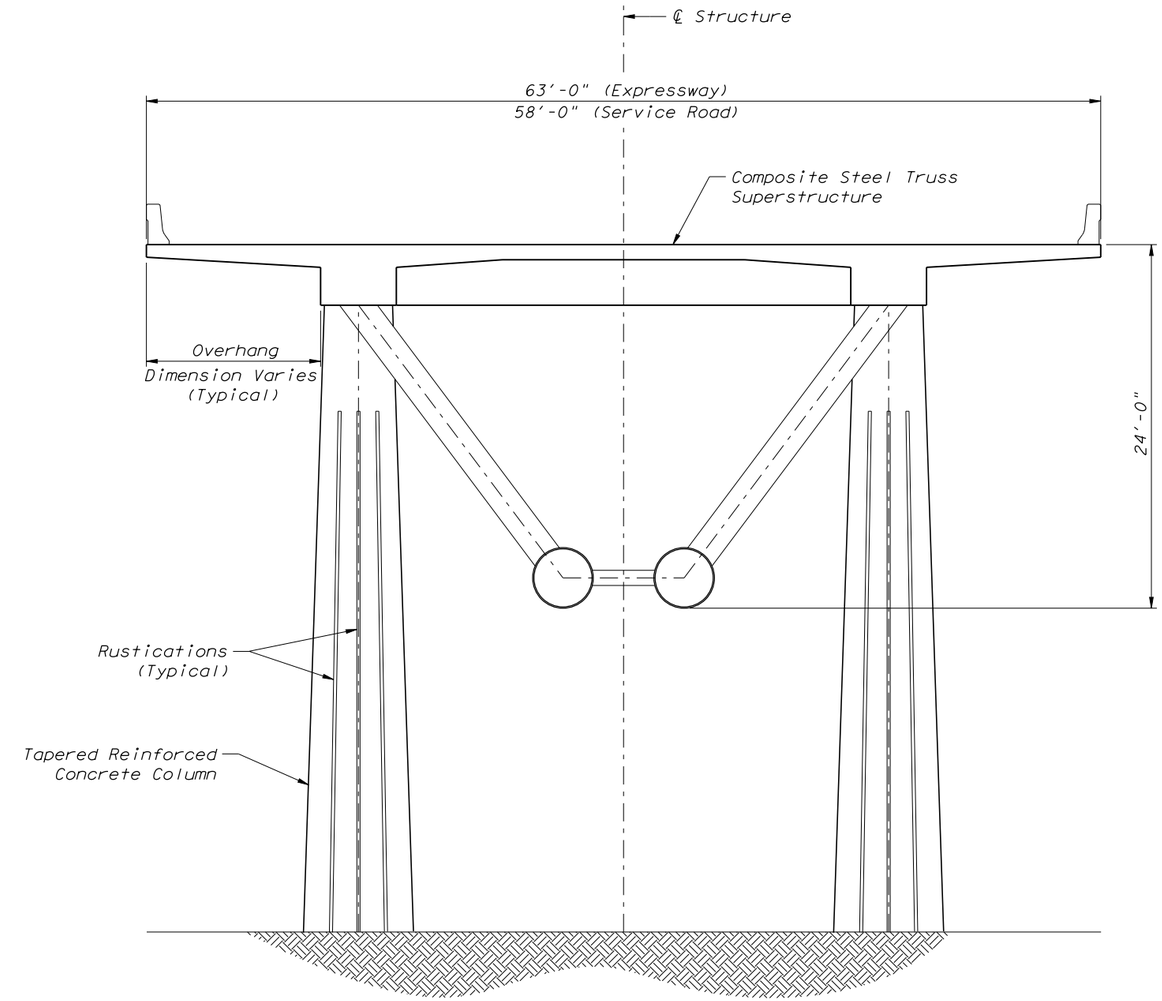

TYPICAL SECTION AT MAIN PIERS 9 & 10

FIGURE 3A **COMPOSITE STEEL TRUSS**
BRIDGE SCHEME 3 - MAIN PIER DETAIL

JULY 13, 2011
WEKIVA RIVER BRIDGE STUDY

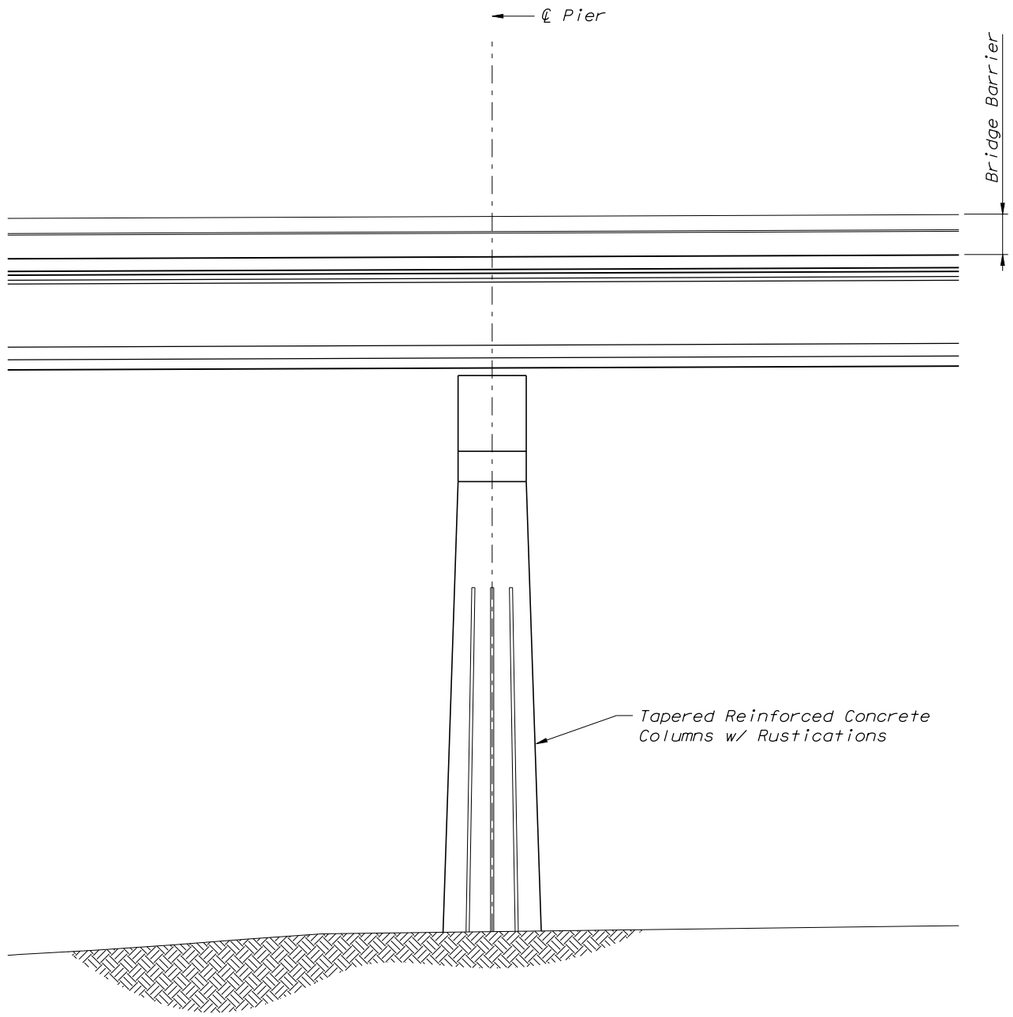

ELEVATION AT APPROACH PIERS

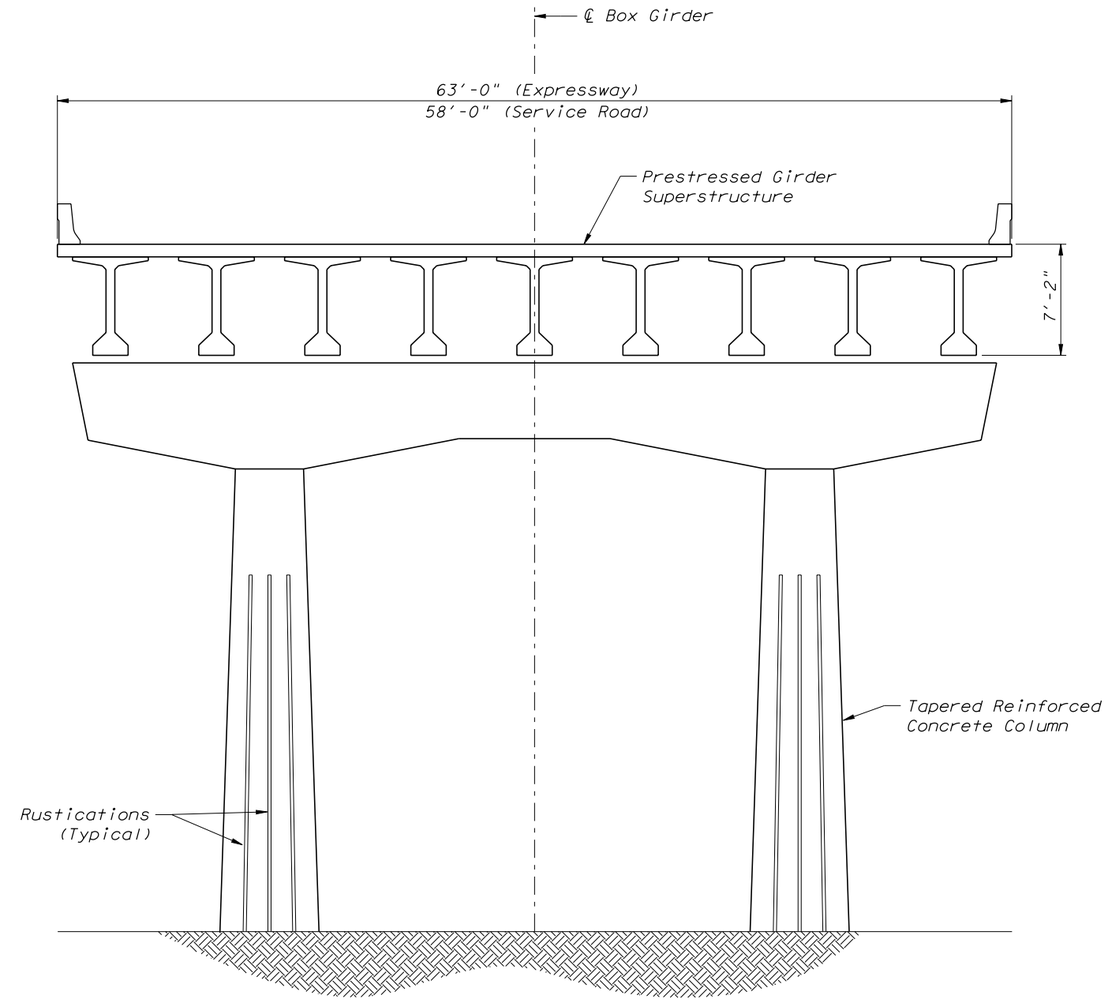

TYPICAL SECTION AT APPROACH PIERS

FIGURE 4
TYPICAL BRIDGE SCHEME - APPROACH PIER DETAIL

JULY 13, 2011
WEKIVA RIVER BRIDGE STUDY

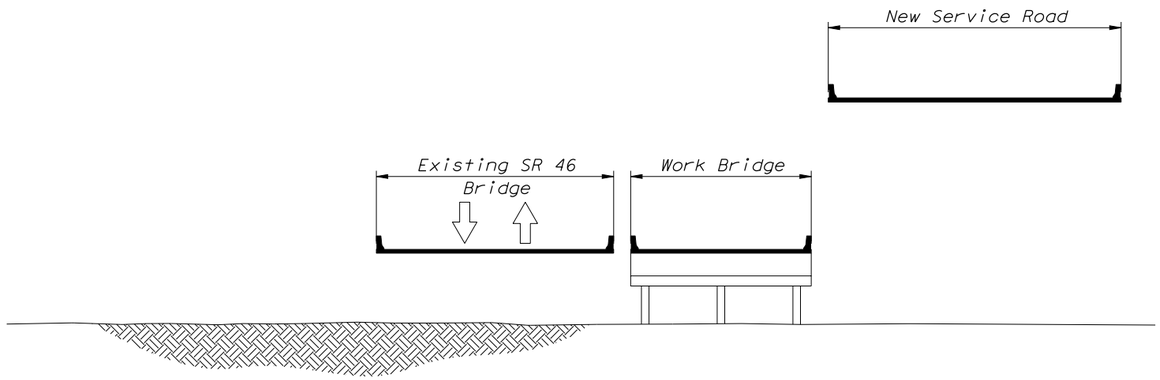

STAGE 1

STAGE 1

- Construct Work Bridge South of Existing SR 46 Bridge.
- Construct New Service Road Bridge.

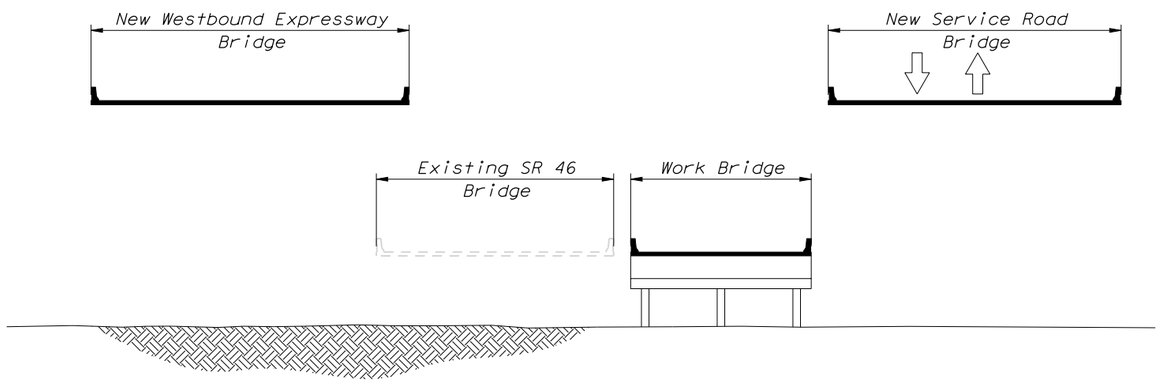

STAGE 2

STAGE 2

- Move SR 46 Traffic onto Service Road and Bridge.
- Construct New Westbound Expressway Bridge.
- Remove Existing SR 46 Bridge.

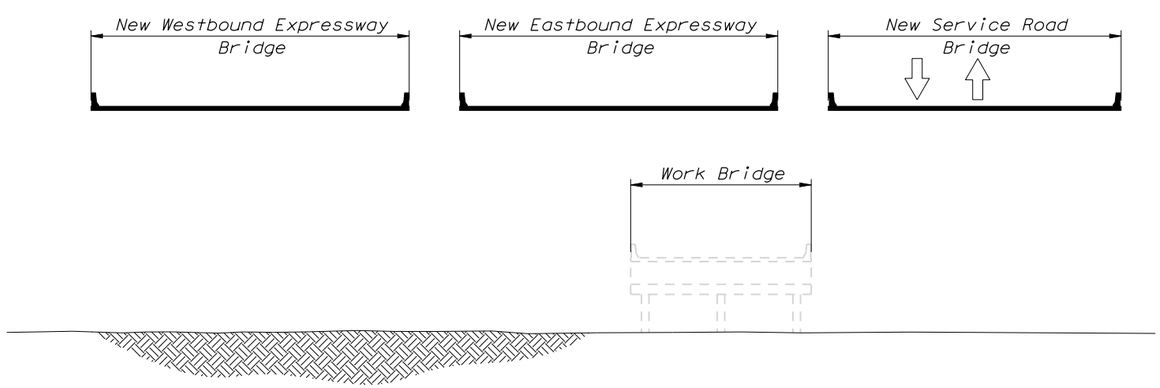

STAGE 3

STAGE 3

- Construct New Eastbound Expressway Bridge while removing Work Bridge.
- Open New Bridges and Roadway to Traffic.

FIGURE 5
CONSTRUCTION PHASING

JULY 13, 2011
WEKIVA RIVER BRIDGE STUDY

APPENDIX C

AACE Accuracy Chart

AACE International Recommended Practice No. 18R-97

COST ESTIMATE CLASSIFICATION SYSTEM – AS APPLIED IN ENGINEERING, PROCUREMENT, AND CONSTRUCTION FOR THE PROCESS INDUSTRIES

Acknowledgment:
Peter Christensen CCE, Primary Author
Larry R. Dysert CCC, Primary Author
Jennifer Bates CCE
Dorothy J. Burton
Robert C. Creese PE CCE
John K. Hollmann PE CCE
Kenneth K. Humphreys PE CCE
Donald F. McDonald JR. PE CCE
C. Arthur Miller
Bernard A. Pietlock CCC
Wesley R. Querns CCE
Don L. Short II

Copyright 2005 AACE, Inc.

Recommended Practice No. 18R-97

Cost Estimate Classification System – As Applied in Engineering, Procurement, and Construction for the Process Industries

February 2, 2005

PURPOSE

As a recommended practice of AACE International, the Cost Estimate Classification System provides guidelines for applying the general principles of estimate classification to project cost estimates (i.e., cost estimates that are used to evaluate, approve, and/or fund projects). The Cost Estimate Classification System maps the phases and stages of project cost estimating together with a generic maturity and quality matrix, which can be applied across a wide variety of industries.

This addendum to the generic recommended practice provides guidelines for applying the principles of estimate classification specifically to project estimates for engineering, procurement, and construction (EPC) work for the process industries. This addendum supplements the generic recommended practice (17R-97) by providing:

- a section that further defines classification concepts as they apply to the process industries;
- charts that compare existing estimate classification practices in the process industry; and
- a chart that maps the extent and maturity of estimate input information (project definition deliverables) against the class of estimate.

As with the generic standard, an intent of this addendum is to improve communications among all of the stakeholders involved with preparing, evaluating, and using project cost estimates specifically for the process industries.

It is understood that each enterprise may have its own project and estimating processes and terminology, and may classify estimates in particular ways. This guideline provides a generic and generally acceptable classification system for process industries that can be used as a basis to compare against. It is hoped that this addendum will allow each user to better assess, define, and communicate their own processes and standards in the light of generally-accepted cost engineering practice.

INTRODUCTION

For the purposes of this addendum, the term process industries is assumed to include firms involved with the manufacturing and production of chemicals, petrochemicals, and hydrocarbon processing. The common thread among these industries (for the purpose of estimate classification) is their reliance on process flow diagrams (PFDs) and piping and instrument diagrams (P&IDs) as primary scope defining documents. These documents are key deliverables in determining the level of project definition, and thus the extent and maturity of estimate input information.

Estimates for process facilities center on mechanical and chemical process equipment, and they have significant amounts of piping, instrumentation, and process controls involved. As such, this addendum may apply to portions of other industries, such as pharmaceutical, utility, metallurgical, converting, and similar industries. Specific addendums addressing these industries may be developed over time.

This addendum specifically does not address cost estimate classification in nonprocess industries such as commercial building construction, environmental remediation, transportation infrastructure, “dry” processes such as assembly and manufacturing, “soft asset” production such as software development, and similar industries. It also does not specifically address estimates for the exploration, production, or transportation of mining or hydrocarbon materials, although it may apply to some of the intermediate processing steps in these systems.

The cost estimates covered by this addendum are for engineering, procurement, and construction (EPC) work only. It does not cover estimates for the products manufactured by the process facilities, or for research and development work in support of the process industries. This guideline does not cover the significant building construction that may be a part of process plants. Building construction will be covered in a separate addendum.

Copyright 2005 AACE, Inc.

This guideline reflects generally-accepted cost engineering practices. This addendum was based upon the practices of a wide range of companies in the process industries from around the world, as well as published references and standards. Company and public standards were solicited and reviewed by the AACE International Cost Estimating Committee. The practices were found to have significant commonalities that are conveyed in this addendum.

COST ESTIMATE CLASSIFICATION MATRIX FOR THE PROCESS INDUSTRIES

The five estimate classes are presented in figure 1 in relationship to the identified characteristics. Only the level of project definition determines the estimate class. The other four characteristics are secondary characteristics that are generally correlated with the level of project definition, as discussed in the generic standard. The characteristics are typical for the process industries but may vary from application to application.

This matrix and guideline provide an estimate classification system that is specific to the process industries. Refer to the generic standard for a general matrix that is non-industry specific, or to other addendums for guidelines that will provide more detailed information for application in other specific industries. These will typically provide additional information, such as input deliverable checklists to allow meaningful categorization in those particular industries.

	Primary Characteristic	***Secondary Characteristic***			
ESTIMATE CLASS	**LEVEL OF PROJECT DEFINITION** Expressed as % of complete definition	**END USAGE** Typical purpose of estimate	**METHODOLOGY** Typical estimating method	**EXPECTED ACCURACY RANGE** Typical variation in low and high ranges [a]	**PREPARATION EFFORT** Typical degree of effort relative to least cost index of 1 [b]
Class 5	0% to 2%	Concept Screening	Capacity Factored, Parametric Models, Judgment, or Analogy	L: -20% to -50% H: +30% to +100%	1
Class 4	1% to 15%	Study or Feasibility	Equipment Factored or Parametric Models	L: -15% to -30% H: +20% to +50%	2 to 4
Class 3	10% to 40%	Budget, Authorization, or Control	Semi-Detailed Unit Costs with Assembly Level Line Items	L: -10% to -20% H: +10% to +30%	3 to 10
Class 2	30% to 70%	Control or Bid/ Tender	Detailed Unit Cost with Forced Detailed Take-Off	L: -5% to -15% H: +5% to +20%	4 to 20
Class 1	50% to 100%	Check Estimate or Bid/Tender	Detailed Unit Cost with Detailed Take-Off	L: -3% to -10% H: +3% to +15%	5 to 100

Notes: [a] The state of process technology and availability of applicable reference cost data affect the range markedly. The +/- value represents typical percentage variation of actual costs from the cost estimate after application of contingency (typically at a 50% level of confidence) for given scope.
[b] If the range index value of "1" represents 0.005% of project costs, then an index value of 100 represents 0.5%. Estimate preparation effort is highly dependent upon the size of the project and the quality of estimating data and tools.

Figure 1. – Cost Estimate Classification Matrix for Process Industries

CHARACTERISTICS OF THE ESTIMATE CLASSES

The following charts (figures 2a through 2e) provide detailed descriptions of the five estimate classifications as applied in the process industries. They are presented in the order of least-defined estimates to the most-defined estimates. These descriptions include brief discussions of each of the estimate characteristics that define an estimate class.

For each chart, the following information is provided:

- **Description:** a short description of the class of estimate, including a brief listing of the expected estimate inputs based on the level of project definition.
- **Level of Project Definition Required:** expressed as a percent of full definition. For the process industries, this correlates with the percent of engineering and design complete.
- **End Usage:** a short discussion of the possible end usage of this class of estimate.
- **Estimating Methods Used:** a listing of the possible estimating methods that may be employed to develop an estimate of this class.
- **Expected Accuracy Range:** typical variation in low and high ranges after the application of contingency (determined at a 50% level of confidence). Typically, this results in a 90% confidence that the actual cost will fall within the bounds of the low and high ranges.
- **Effort to Prepare:** this section provides a typical level of effort (in hours) to produce a complete estimate for a US$20,000,000 plant. Estimate preparation effort is highly dependent on project size, project complexity, estimator skills and knowledge, and on the availability of appropriate estimating cost data and tools.
- **ANSI Standard Reference (1989) Name:** this is a reference to the equivalent estimate class in the existing ANSI standards.
- **Alternate Estimate Names, Terms, Expressions, Synonyms:** this section provides other commonly used names that an estimate of this class might be known by. These alternate names are not endorsed by this Recommended Practice. The user is cautioned that an alternative name may not always be correlated with the class of estimate as identified in the chart.

CLASS 5 ESTIMATE	
Description: Class 5 estimates are generally prepared based on very limited information, and subsequently have wide accuracy ranges. As such, some companies and organizations have elected to determine that due to the inherent inaccuracies, such estimates cannot be classified in a conventional and systemic manner. Class 5 estimates, due to the requirements of end use, may be prepared within a very limited amount of time and with little effort expended—sometimes requiring less than an hour to prepare. Often, little more than proposed plant type, location, and capacity are known at the time of estimate preparation. **Level of Project Definition Required:** 0% to 2% of full project definition. **End Usage:** Class 5 estimates are prepared for any number of strategic business planning purposes, such as but not limited to market studies, assessment of initial viability, evaluation of alternate schemes, project screening, project location studies, evaluation of resource needs and budgeting, long-range capital planning, etc.	**Estimating Methods Used:** Class 5 estimates virtually always use stochastic estimating methods such as cost/capacity curves and factors, scale of operations factors, Lang factors, Hand factors, Chilton factors, Peters-Timmerhaus factors, Guthrie factors, and other parametric and modeling techniques. **Expected Accuracy Range:** Typical accuracy ranges for Class 5 estimates are - 20% to -50% on the low side, and +30% to +100% on the high side, depending on the technological complexity of the project, appropriate reference information, and the inclusion of an appropriate contingency determination. Ranges could exceed those shown in unusual circumstances. **Effort to Prepare (for US$20MM project):** As little as 1 hour or less to perhaps more than 200 hours, depending on the project and the estimating methodology used. **ANSI Standard Reference Z94.2-1989 Name:** Order of magnitude estimate (typically -30% to +50%). **Alternate Estimate Names, Terms, Expressions, Synonyms:** Ratio, ballpark, blue sky, seat-of-pants, ROM, idea study, prospect estimate, concession license estimate, guesstimate, rule-of-thumb.

Figure 2a. – Class 5 Estimate

Copyright 2005 AACE, Inc.

CLASS 4 ESTIMATE	
Description: Class 4 estimates are generally prepared based on limited information and subsequently have fairly wide accuracy ranges. They are typically used for project screening, determination of feasibility, concept evaluation, and preliminary budget approval. Typically, engineering is from 1% to 15% complete, and would comprise at a minimum the following: plant capacity, block schematics, indicated layout, process flow diagrams (PFDs) for main process systems, and preliminary engineered process and utility equipment lists. **Level of Project Definition Required:** 1% to 15% of full project definition. **End Usage:** Class 4 estimates are prepared for a number of purposes, such as but not limited to, detailed strategic planning, business development, project screening at more developed stages, alternative scheme analysis, confirmation of economic and/or technical feasibility, and preliminary budget approval or approval to proceed to next stage.	**Estimating Methods Used:** Class 4 estimates virtually always use stochastic estimating methods such as equipment factors, Lang factors, Hand factors, Chilton factors, Peters-Timmerhaus factors, Guthrie factors, the Miller method, gross unit costs/ratios, and other parametric and modeling techniques. **Expected Accuracy Range:** Typical accuracy ranges for Class 4 estimates are -15% to -30% on the low side, and +20% to +50% on the high side, depending on the technological complexity of the project, appropriate reference information, and the inclusion of an appropriate contingency determination. Ranges could exceed those shown in unusual circumstances. **Effort to Prepare (for US$20MM project):** Typically, as little as 20 hours or less to perhaps more than 300 hours, depending on the project and the estimating methodology used. **ANSI Standard Reference Z94.2-1989 Name:** Budget estimate (typically -15% to + 30%). **Alternate Estimate Names, Terms, Expressions, Synonyms:** Screening, top-down, feasibility, authorization, factored, pre-design, pre-study.

Figure 2b. – Class 4 Estimate

CLASS 3 ESTIMATE	
Description: Class 3 estimates are generally prepared to form the basis for budget authorization, appropriation, and/or funding. As such, they typically form the initial control estimate against which all actual costs and resources will be monitored. Typically, engineering is from 10% to 40% complete, and would comprise at a minimum the following: process flow diagrams, utility flow diagrams, preliminary piping and instrument diagrams, plot plan, developed layout drawings, and essentially complete engineered process and utility equipment lists. **Level of Project Definition Required:** 10% to 40% of full project definition. **End Usage:** Class 3 estimates are typically prepared to support full project funding requests, and become the first of the project phase "control estimates" against which all actual costs and resources will be monitored for variations to the budget. They are used as the project budget until replaced by more detailed estimates. In many owner organizations, a Class 3 estimate may be the last estimate required and could well form the only basis for cost/schedule control.	**Estimating Methods Used:** Class 3 estimates usually involve more deterministic estimating methods than stochastic methods. They usually involve a high degree of unit cost line items, although these may be at an assembly level of detail rather than individual components. Factoring and other stochastic methods may be used to estimate less-significant areas of the project. **Expected Accuracy Range:** Typical accuracy ranges for Class 3 estimates are -10% to -20% on the low side, and +10% to +30% on the high side, depending on the technological complexity of the project, appropriate reference information, and the inclusion of an appropriate contingency determination. Ranges could exceed those shown in unusual circumstances. **Effort to Prepare (for US$20MM project):** Typically, as little as 150 hours or less to perhaps more than 1,500 hours, depending on the project and the estimating methodology used. **ANSI Standard Reference Z94.2-1989 Name:** Budget estimate (typically -15% to + 30%). **Alternate Estimate Names, Terms, Expressions, Synonyms:** Budget, scope, sanction, semi-detailed, authorization, preliminary control, concept study, development, basic engineering phase estimate, target estimate.

Figure 2c. – Class 3 Estimate

Copyright 2005 AACE, Inc.

CLASS 2 ESTIMATE	
Description: Class 2 estimates are generally prepared to form a detailed control baseline against which all project work is monitored in terms of cost and progress control. For contractors, this class of estimate is often used as the "bid" estimate to establish contract value. Typically, engineering is from 30% to 70% complete, and would comprise at a minimum the following: process flow diagrams, utility flow diagrams, piping and instrument diagrams, heat and material balances, final plot plan, final layout drawings, complete engineered process and utility equipment lists, single line diagrams for electrical, electrical equipment and motor schedules, vendor quotations, detailed project execution plans, resourcing and work force plans, etc. **Level of Project Definition Required:** 30% to 70% of full project definition. **End Usage:** Class 2 estimates are typically prepared as the detailed control baseline against which all actual costs and resources will now be monitored for variations to the budget, and form a part of the change/variation control program.	**Estimating Methods Used:** Class 2 estimates always involve a high degree of deterministic estimating methods. Class 2 estimates are prepared in great detail, and often involve tens of thousands of unit cost line items. For those areas of the project still undefined, an assumed level of detail takeoff (forced detail) may be developed to use as line items in the estimate instead of relying on factoring methods. **Expected Accuracy Range:** Typical accuracy ranges for Class 2 estimates are -5% to -15% on the low side, and +5% to +20% on the high side, depending on the technological complexity of the project, appropriate reference information, and the inclusion of an appropriate contingency determination. Ranges could exceed those shown in unusual circumstances. **Effort to Prepare (for US$20MM project):** Typically, as little as 300 hours or less to perhaps more than 3,000 hours, depending on the project and the estimating methodology used. Bid estimates typically require more effort than estimates used for funding or control purposes. **ANSI Standard Reference Z94.2-1989 Name:** Definitive estimate (typically -5% to + 15%). **Alternate Estimate Names, Terms, Expressions, Synonyms:** Detailed control, forced detail, execution phase, master control, engineering, bid, tender, change order estimate.

Figure 2d. – Class 2 Estimate

CLASS 1 ESTIMATE	
Description: Class 1 estimates are generally prepared for discrete parts or sections of the total project rather than generating this level of detail for the entire project. The parts of the project estimated at this level of detail will typically be used by subcontractors for bids, or by owners for check estimates. The updated estimate is often referred to as the current control estimate and becomes the new baseline for cost/schedule control of the project. Class 1 estimates may be prepared for parts of the project to comprise a fair price estimate or bid check estimate to compare against a contractor's bid estimate, or to evaluate/dispute claims. Typically, engineering is from 50% to 100% complete, and would comprise virtually all engineering and design documentation of the project, and complete project execution and commissioning plans. **Level of Project Definition Required:** 50% to 100% of full project definition. **End Usage:** Class 1 estimates are typically prepared to form a current control estimate to be used as the final control baseline against which all actual costs and resources will now be monitored for variations to the budget, and form a part of the change/variation control program. They may be used to evaluate bid checking, to support vendor/contractor negotiations, or for claim evaluations and dispute resolution.	**Estimating Methods Used:** Class 1 estimates involve the highest degree of deterministic estimating methods, and require a great amount of effort. Class 1 estimates are prepared in great detail, and thus are usually performed on only the most important or critical areas of the project. All items in the estimate are usually unit cost line items based on actual design quantities. **Expected Accuracy Range:** Typical accuracy ranges for Class 1 estimates are -3% to -10% on the low side, and +3% to +15% on the high side, depending on the technological complexity of the project, appropriate reference information, and the inclusion of an appropriate contingency determination. Ranges could exceed those shown in unusual circumstances. **Effort to Prepare (for US$20MM project):** Class 1 estimates require the most effort to create, and as such are generally developed for only selected areas of the project, or for bidding purposes. A complete Class 1 estimate may involve as little as 600 hours or less, to perhaps more than 6,000 hours, depending on the project and the estimating methodology used. Bid estimates typically require more effort than estimates used for funding or control purposes. **ANSI Standard Reference Z94.2 Name:** Definitive estimate (typically -5% to + 15%). **Alternate Estimate Names, Terms, Expressions, Synonyms:** Full detail, release, fall-out, tender, firm price, bottoms-up, final, detailed control, forced detail, execution phase, master control, fair price, definitive, change order estimate.

Figure 2e. – Class 1 Estimate

Copyright 2005 AACE, Inc.

COMPARISON OF CLASSIFICATION PRACTICES

Figures 3a through 3c provide a comparison of the estimate classification practices of various firms, organizations, and published sources against one another and against the guideline classifications. These tables permits users to benchmark their own classification practices.

INCREASING PROJECT DEFINITION

AACE Classification Standard	ANSI Standard Z94.0	AACE Pre-1972	Association of Cost Engineers (UK) ACostE	Norwegian Project Management Association (NFP)	American Society of Professional Estimators (ASPE)
Class 5	Order of Magnitude Estimate -30/+50	Order of Magnitude Estimate	Order of Magnitude Estimate Class IV -30/+30	Concession Estimate Exploration Estimate Feasibility Estimate	Level 1
Class 4	Budget Estimate -15/+30	Study Estimate	Study Estimate Class III -20/+20	Authorization Estimate	Level 2
Class 3		Preliminary Estimate	Budget Estimate Class II -10/+10	Master Control Estimate	Level 3
Class 2	Definitive Estimate -5/+15	Definitive Estimate	Definitive Estimate Class I -5/+5	Current Control Estimate	Level 4
Class 1		Detailed Estimate			Level 5 Level 6

Figure 3a. – Comparison of Classification Practices

INCREASING PROJECT DEFINITION

AACE Classification Standard	Major Consumer Products Company (Confidential)	Major Oil Company (Confidential)	Major Oil Company (Confidential)	Major Oil Company (Confidential)
Class 5	Class S Strategic Estimate	Class V Order of Magnitude Estimate	Class A Prospect Estimate Class B Evaluation Estimate	Class V
Class 4	Class 1 Conceptual Estimate	Class IV Screening Estimate	Class C Feasibility Estimate Class D Development Estimate	Class IV
Class 3	Class 2 Semi-Detailed Estimate	Class III Primary Control Estimate	Class E Preliminary Estimate	Class III
Class 2	Class 3 Detailed Estimate	Class II Master Control Estimate	Class F Master Control Estimate	Class II
Class 1		Class I Current Control Estimate	Current Control Estimate	Class I

Figure 3b. – Comparison of Classification Practices

INCREASING PROJECT DEFINITION

AACE Classification Standard	J.R. Heizelman, 1988 AACE Transactions [1]	K.T. Yeo, The Cost Engineer, 1989 [2]	Stevens & Davis, 1988 AACE Transactions [3]	P. Behrenbruck, Journal of Petroleum Technology, 1993 [4]
Class 5	Class V	Class V Order of Magnitude	Class III*	Order of Magnitude
Class 4	Class IV	Class IV Factor Estimate	Class II	Study Estimate
Class 3	Class III	Class III Office Estimate		Budget Estimate
Class 2	Class II	Class II Definitive Estimate		
Class 1	Class I	Class I Final Estimate	Class I	Control Estimate

[1] John R. Heizelman, ARCO Oil & Gas Co., 1988 AACE Transactions, Paper V3.7
[2] K.T. Yeo, The Cost Engineer, Vol. 27, No. 6, 1989
[3] Stevens & Davis, BP International Ltd., 1988 AACE Transactions, Paper B4.1 (* Class III is inferred)
[4] Peter Behrenbruck, BHP Petroleum Pty., Ltd., article in Petroleum Technology, August 1993

Figure 3c. – Comparison of Classification Practices

Copyright 2005 AACE, Inc.

ESTIMATE INPUT CHECKLIST AND MATURITY MATRIX

Figure 4 maps the extent and maturity of estimate input information (deliverables) against the five estimate classification levels. This is a checklist of basic deliverables found in common practice in the process industries. The maturity level is an approximation of the degree of completion of the deliverable. The degree of completion is indicated by the following letters.

- None (blank): development of the deliverable has not begun.
- Started (S): work on the deliverable has begun. Development is typically limited to sketches, rough outlines, or similar levels of early completion.
- Preliminary (P): work on the deliverable is advanced. Interim, cross-functional reviews have usually been conducted. Development may be near completion except for final reviews and approvals.
- Complete (C): the deliverable has been reviewed and approved as appropriate.

	ESTIMATE CLASSIFICATION				
General Project Data:	**CLASS 5**	**CLASS 4**	**CLASS 3**	**CLASS 2**	**CLASS 1**
Project Scope Description	General	Preliminary	Defined	Defined	Defined
Plant Production/Facility Capacity	Assumed	Preliminary	Defined	Defined	Defined
Plant Location	General	Approximate	Specific	Specific	Specific
Soils & Hydrology	None	Preliminary	Defined	Defined	Defined
Integrated Project Plan	None	Preliminary	Defined	Defined	Defined
Project Master Schedule	None	Preliminary	Defined	Defined	Defined
Escalation Strategy	None	Preliminary	Defined	Defined	Defined
Work Breakdown Structure	None	Preliminary	Defined	Defined	Defined
Project Code of Accounts	None	Preliminary	Defined	Defined	Defined
Contracting Strategy	Assumed	Assumed	Preliminary	Defined	Defined
Engineering Deliverables:					
Block Flow Diagrams	S/P	P/C	C	C	C
Plot Plans		S	P/C	C	C
Process Flow Diagrams (PFDs)		S/P	P/C	C	C
Utility Flow Diagrams (UFDs)		S/P	P/C	C	C
Piping & Instrument Diagrams (P&IDs)		S	P/C	C	C
Heat & Material Balances		S	P/C	C	C
Process Equipment List		S/P	P/C	C	C
Utility Equipment List		S/P	P/C	C	C
Electrical One-Line Drawings		S/P	P/C	C	C
Specifications & Datasheets		S	P/C	C	C
General Equipment Arrangement Drawings		S	P/C	C	C
Spare Parts Listings			S/P	P	C
Mechanical Discipline Drawings			S	P	P/C
Electrical Discipline Drawings			S	P	P/C
Instrumentation/Control System Discipline Drawings			S	P	P/C
Civil/Structural/Site Discipline Drawings			S	P	P/C

Figure 4. – Estimate Input Checklist and Maturity Matrix

REFERENCES

ANSI Standard Z94.2-1989. **Industrial Engineering Terminology: Cost Engineering**.
AACE International Recommended Practice No.17R-97, **Cost Estimate Classification System**.

Copyright 2005 AACE, Inc.

AACE – Classification System

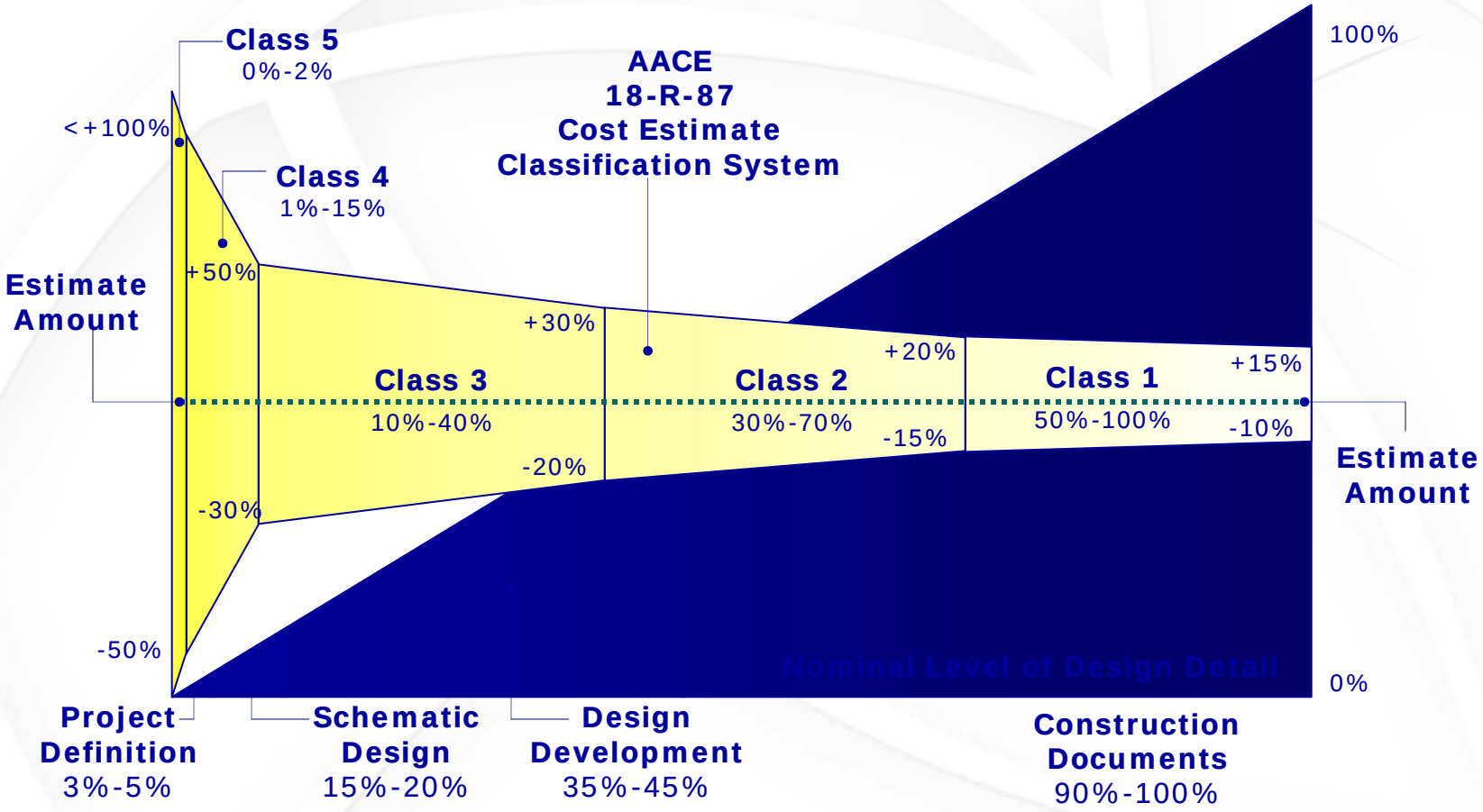

Construction Cost Estimate Accuracy Ranges

CH2MHILL

Estimate Class	Class 5		Class 4		Class 3		Class 2		Class 1	
LEVEL OF PROJECT DEFINITION Expressed as a % of complete definition	**0% to 2%**		**1% to 15%**		**10% to 40%**		**30% to 70%**		**50% to 100%**	
END USAGE Typical Purpose of Estimate	**Concept Screening**		**Study or Feasibility**		**Budget Authorization, or Control**		**Control or Bid / Tender**		**Check Estimate or Bid / Tender**	
METHODOLOGY Typical estimating method	**Capacity Factored, Parametric Models, Judgment, or Analogy**		**Equipment Factored or Parametric Models**		**Semi-Detailed Unit Costs with Assembly Level Line Items**		**Detailed Unit Cost with Forced Detailed Take-Off**		**Detailed Unit Cost with Detailed Take-Off**	
EXPECTED ACCURACY RANGE Typical variation in low and high ranges [a]	**L: -20% to -50%**	**H: +30% to +100%**	**L: -15% to -30%**	**H: +20% to +50%**	**L: -10% to -20%**	**H: +10% to +30%**	**L: -5% to -15%**	**H: +5% to +20%**	**L: -3% to -10%**	**H: +3% to +15%**
PREPARATION EFFORT Typical degree of effort relative to least cost index of 1 [b]	**1**		**2 to 4**		**3 to 10**		**4 to 20**		**5 to 100**	
REFINED CLASS DEFINITION	Class 5 estimates are generally prepared based on very limited information, and subsequently have very wide accuracy ranges. As such, some companies and organizations have elected to determine that due to the inherent inaccuracies, such estimates cannot be classified in a conventional and systematic manner. Class 5 estimates, due to the requirements of end use, may be prepared within a very limited amount of time and with very little effort expended - sometimes requiring less than 1 hour to prepare. Often, little more than proposed plant type, location, and capacity are known at the time of estimate preparation.		Class 4 estimates are generally prepared based on very limited information, and subsequently have very wide accuracy ranges. They are typically used for project screening, determination of feasibility, concept evaluation, and preliminary budget approval. Typically, engineering is from 1% to 5% complete, and would comprise at a minimum the following: plant capacity, block schematics, indicated layout, process flow diagrams (PFDs) for main process systems and preliminary engineered process and utility equipment lists. Level of Project Definition Required: 1% to 15% of full project definition.		Class 3 estimates are generally prepared to form the basis for budget authorization, appropriation, and/or funding. As such, they typically form the initial control estimate against which all actual costs and resources will be monitored. Typically, engineering is from 10% to 40% complete, and would comprise at a minimum the following: process flow diagrams, utility flow diagrams, preliminary piping and instrument diagrams, utility flow diagrams, preliminary piping and instrument diagrams, plot plan, developed layout drawings, and essentially complete engineering process and utility equipment lists. Level Of Project Definition Required: 10% to 40% of full project definition.		Class 2 estimates are generally prepared to form a detailed control baseline against which all project work is monitored in terms of cost and progress control. For contractors, this class of estimate is often used as the "bid" estimate to establish contract value. Typically, engineering is from 30% to 70% complete, and would comprise at a minimum the following: Process flow diagrams, utility flow diagrams, piping and instrument flow diagrams, heat and material balances, final plot plan, final layout drawings, complete engineered process and utility equipment lists, single line diagrams for electrical, electrical equipment and motor schedules, vendor quotations, detailed project execution plans, resourcing and work force plans, etc.		Class 1 estimates are generally prepared for discrete parts or sections of the total project rather than generating this level of detail for the entire project. The parts of the project estimated at this level of detail will typically be used by subcontractors for bids, or by owners for check estimates. The updated estimate is often referred to as the current control estimate and becomes the new baseline for cost/schedule control of the project. Class 1 estimates may be prepared for parts of the project to comprise a fair price estimate or bid check estimate to compare against a contractor's bid estimate, or to evaluate/dispute claims. Typically, engineering is from 50% to 100% complete, and would comprise virtually all engineering and design documentation of the project, and complete project execution and commissioning plans. Level for Project Definition Required: 50% to 100% of full project definition.	
END USAGE DEFINED	Class 5 estimates are prepared for any number of strategic business planning purposes, such as but not limited to market studies, assessment of initial viability, evaluation of alternate schemes, project screening, project location studies, evaluation of resource needs and budgeting, long-range capital planning, etc.		Class 4 estimates are prepared for a number of purposes, such as but not limited to, detailed strategic planning, business development, project screening at more developed stages, alternative scheme analysis, confirmation of economic and/or technical feasibility, and preliminary budget approval or approval to proceed to next stage.		Class 3 estimates are typically prepared to support full project funding requests, and become the first of the project phase "control estimate" against which all actual costs and resources will be monitored for variations to the budget. They are used as the project budget until replaced by more detailed estimates. In many owner organizations, a Class 3 estimate may be the last estimate required and could well form the only basis for cost/schedule control.		Class 2 estimates are typically prepared as the detailed control baseline against which all actual costs an resources will now be monitored for variation to the budget, and form a part of the change/variation control program.		Class 1 estimates are typically prepared to form a current control estimate to be used as the final control baseline against which all actual coasts and resources will now be monitored for variations to the budget, and form a part of the change/variation control program. They may be used to evaluate bid checking, to support vendor/contractor negotiations, or for claim evaluations and dispute resolution.	
ESTIMATING METHODS USED	Class 5 estimates virtually always use stochastic estimating methods such as cost/capacity curves and factors, scale of operations factors, Lang factors, Hand factors, Chilton factors, Peters-Timmerhaus factors, Guthrie factors, and other parametric and modeling techniques.		Class 4 estimates virtually always use stochastic estimating methods such as cost/capacity curves and factors, scale of operations factors, Lang factors, Hand factors, Chilton factors, Peters-Timmerhaus factors, Guthrie factors, the Miller method, gross unit costs/ratios, and other parametric and modeling techniques.		Class 3 estimates usually involve more deterministic estimating methods that stochastic methods. They usually involve a high degree of unit cost line items, although these may be at an assembly level of detail rather than individual components. Factoring and other stochastic methods may be used to estimate less-significant areas of the project.		Class 2 estimates always involve a high degree of deterministic estimating methods. Class 2 estimates are prepared in great detail, and often involve tens of thousands of unit cost line items. For those areas of the project still undefined, an assumed level of detailed takeoff (forced detail) may be developed to use as line items in the estimate instead of relying on factoring methods.		Class 1 estimates involve the highest degree of deterministic estimating methods, and require a great amount of effort. Class 1 estimates are prepared in great detail, and thus are usually performed on only the most important or critical areas of the project. All items in the estimate are usually unit cost line items based on actual design quantities.	
EXPECTED ACCURACY RANGE	Typical accuracy ranges for Class 5 estimates are -20% to -50% on the low side, and +30% to +100% on the high side, depending on the technological complexity of the project, appropriate contingency determination. Ranges could exceed those shown in unusual circumstances.		Typical accuracy ranges for Class 4 estimates are -15% to -30% on the low side, and +20% to +50% on the high side, depending on the technological complexity of the project, appropriate reference information, and the inclusion of an appropriate contingency determination. Ranges could exceed those shown in unusual circumstances.		Typical accuracy ranges for Class 3 estimates are -10% to -20% on the low side, and +10% to +30% on the high side, depending on the technological complexity of the project, appropriate reference information, and the inclusion of an appropriate contingency determination. Ranges could exceed those shown in unusual circumstances.		Typical accuracy ranges for Class 2 estimates are -5% to -15% on the low side, and +5% to +20% on the high side, depending on the technological complexity of the project, appropriate reference information, and the inclusion of an appropriate contingency determination. Ranges could exceed those shown in unusual circumstances.		Typical accuracy ranges for Class 1 estimates are -3% to -10% on the low side, and +3% to +15% on the high side, depending on the technological complexity of the project, appropriate reference information, and the inclusion of an appropriate contingency determination. Ranges could exceed those shown in unusual circumstances.	
EFFORT TO PREPARE (for US$20MM project):	As little as 1 hour or less to prepare to perhaps more than 200 hours, depending on the project and the estimating methodology used.		Typically, as little as 20 hours or less to perhaps more than 300 hours, depending on the project and the estimating methodology used.		Typically, as little as 150 hours or less to perhaps more than 1500 hours, depending on the project and the estimating methodology used.		Typically, as little as 300 hours or less to perhaps more than 3000 hours, depending on the project and the estimating methodology used. Bid Estimates typically require more effort than estimates used for funding or control purposes		Class 1 estimates require the most effort to create, and as such are generally developed for only selected areas of the project, or for bidding purposes. A complete Class 1 estimate may involve as little as 600 hours or less, to perhaps more than 6,000 hours, depending on the project and the estimating methodology used. Bid estimate typically require more effort than estimates used for funding or control purposes.	
ANSI Standard Reference Z94.2-1989 name; Alternate Estimate Names, Terms, Expressions, Synonyms:	Order of Magnitude Estimate; Ratio, ballpark, blue sky, seat-of-pants, ROM, idea study, prospect estimate, concession license estimate, guesstimate, rule-of thumb.		Budget Estimate; Screening, top-down, feasibility, authorization, factored, pre-design, pre-study.		Budget Estimate; Budget, scope, sanction, semi-detailed, authorization, preliminary control, concept study, development, basic engineering phase estimate, target estimate.		Definitive Estimate; Detailed Control, forced detail, execution phase, master control, engineering, bid, tender, change order estimate.		Definitive Estimate; Full detail, release, fall-out, tender, firm price, bottoms-up, final, detailed control, forced detail, execution phase, master control, fair price, definitive, change order estimate.	

Estimate Class	Class 5	Class 4	Class 3	Class 2	Class 1
Estimate Input Checklist and Maturity Index	Class 5	Class 4	Class 3	Class 2	Class 1
GENERAL PROJECT DATA					
Project Scope Description	General	Preliminary	Defined	Defined	Defined
Plant Production / Facility Capacity	Assumed	Preliminary	Defined	Defined	Defined
Plant Location	General	Approximate	Specific	Specific	Specific
Soils & Hydrology	None	Preliminary	Defined	Defined	Defined
Integrated Project Plan	None	Preliminary	Defined	Defined	Defined
Project Master Schedule	None	Preliminary	Defined	Defined	Defined
Escalation Strategy	None	Preliminary	Defined	Defined	Defined
Work Breakdown Structure	None	Preliminary	Defined	Defined	Defined
Project Code of Accounts	None	Preliminary	Defined	Defined	Defined
Contracting Strategy	Assumed	Assumed	Preliminary	Defined	Defined
ENGINEERING DELIVERABLES:	**Class 5**	**Class 4**	**Class 3**	**Class 2**	**Class 1**
Block Flow Diagrams	Started / Preliminary	Preliminary / Complete	Complete	Complete	Complete
Plot Plans		Started	Preliminary / Complete	Complete	Complete
Process Flow Diagrams (PFDs)		Started / Preliminary	Preliminary / Complete	Complete	Complete
Utility Flow Diagrams (UFDs)		Started / Preliminary	Preliminary / Complete	Complete	Complete
Piping & Instrument Diagrams (P&IDS)		Started	Preliminary / Complete	Complete	Complete
Heat and Material Balances		Started	Preliminary / Complete	Complete	Complete
Process Equipment List		Started / Preliminary	Preliminary / Complete	Complete	Complete
Utility Equipment List		Started / Preliminary	Preliminary / Complete	Complete	Complete
Electrical One Line Drawings		Started / Preliminary	Preliminary / Complete	Complete	Complete
Specifications and Datasheets		Started	Preliminary / Complete	Complete	Complete
General Equipment Arrangement Drawings		Started	Preliminary / Complete	Complete	Complete
Spare Parts Lists			Started / Preliminary	Preliminary	Complete
Architectural Details / Schedules		Started	Preliminary / Complete	Complete	Complete
Structural Details		Started	Preliminary / Complete	Complete	Complete
Mechanical Discipline Drawings			Started	Preliminary	Preliminary / Complete
Electrical Discipline Drawings			Started	Preliminary	Preliminary / Complete
System Discipline Drawings			Started	Preliminary	Preliminary / Complete
Civil/Site Discipline Drawings			Started	Preliminary	Preliminary / Complete
Demolition Details		Started	Preliminary / Complete	Complete	Complete