FINAL

Bridge Analysis Technical Memorandum

State Road 414 Expressway Extension
Project Development and Environment Study
From US 441 to SR 434
Orange County and Seminole County, Florida

CFX Project Number: 414-227

Prepared for:
Central Florida Expressway Authority
4974 ORL Tower Road
Orlando, FL 32807

Submitted by:
Jacobs Engineering Group Inc.
200 S. Orange Ave., Suite 900
Orlando, FL 32801

PPS0224211243ORL

MAY 2022

CENTRAL FLORIDA EXPRESSWAY AUTHORITY

Contents

Acronyms and Abbreviations ..... **iii**

1. Project Overview **1-1**

1.1 Project Background and Description 1-1

1.2 Purpose and Need 1-4

1.3 Report Purpose 1-4

1.4 Alternatives Considered 1-4

1.4.1 Preferred Alternative 1-4

1.4.2 No-Build Alternative 1-5

2. Existing Bridge Conditions **2-1**

2.1 Overview 2-1

2.2 Existing Bridge Characteristics 2-2

3. Design Criteria **3-1**

4. Bridge Analysis **4-1**

4.1 SR 414 Elevated Expressway (Viaduct) 4-1

4.1.1 SR 414 Over Lake Bosse Bridge 4-5

4.1.2 SR 414 Over Little Wekiva River Bridge 4-6

4.1.3 SR 414 Over SR 434 Bridge 4-7

4.2 Retaining Walls 4-8

4.3 Aesthetic Considerations 4-8

4.4 Constructability 4-10

4.5 Maintenance of Traffic 4-13

5. Bridge Summary and Cost Estimate **5-1**

6. References **6-4**

Appendixes

Appendix A Bridge Concept Plans

Appendix B Existing Bridge Plans

Appendix C Bridge Inspection Reports

Appendix D Load Rating Calculations

Appendix E Calculations and Cost Backup Data

Tables

Table 2-1. Existing Bridge Conditions and Year of Construction **2-1**

Table 2-2. Existing Bridge Characteristics **2-3**

Table 4-1. Preliminary Capacities of Piles **4-5**

Table 5-1. Proposed Bridge Characteristics **5-2**

Figures

Figure 1-1. Regional Location Map 1-2
Figure 1-2. Project Location Map 1-3
Figure 3-1. Vertical Clearance Distance Requirements 3-2
Figure 4-1. Bridge Location Map 4-2
Figure 4-2. Proposed Viaduct Section with Twin Box Alternative 4-4
Figure 4-3. Proposed Viaduct Section with I-Girder Alternative 4-4
Figure 4-4. Bridge Typical Section at Lake Bosse 4-6
Figure 4-5. Bridge Pier Placement at Lake Bosse 4-6
Figure 4-6. Bridge Pier Placement at Little Wekiva River Bridge 4-7
Figure 4-7. Bridge Typical Section at Little Wekiva River Bridge 4-7
Figure 4-8. Bridge Typical Section at SR 434 4-8
Figure 4-9. Aesthetics: Superstructure Considerations 4-9
Figure 4-10. Aesthetics: Substructure Considerations 4-9
Figure 4-11. Aesthetics: Misc. Column Considerations 4-10
Figure 4-12. Aesthetics: Noise wall Considerations 4-10
Figure 4-13. Conceptual Bridge Construction Sequence 4-12

Acronyms and Abbreviations

AASHTO	American Association of State Highway and Transportation Officials
CFX	Central Florida Expressway Authority
EB	eastbound
FDM	FDOT Design Manual
FDOT	Florida Department of Transportation
I-4	Interstate 4
LRFD	Load and Resistance Factor Design
MOT	Maintenance of Traffic
MP	mile post
mph	mile(s) per hour
MSE	mechanically stabilized earth
N/A	not applicable
NB	northbound
NGVD	National Geodetic Vertical Datum of 1929
PD&E	Project Development and Environment
PT	post-tensioned
ROW	right-of-way
SB	southbound
SR 414	State Road 414
SR 429	State Road 429
SR 434	State Road 434
US 441	U.S. Highway 441
WB	westbound

1. Project Overview

1.1 Project Background and Description

The Central Florida Expressway Authority is conducting the State Road 414 Expressway Extension Project Development and Environment Study to evaluate alternatives for a proposed grade-separated expressway extension of the tolled SR 414 (John Land Apopka Expressway). The existing SR 414 Expressway provides regional connectivity from State Road 429 and U.S. Highway 441 in Apopka and extends south and east to SR 414 (Maitland Boulevard) just east of US 441. Figure 1-1 presents the Regional Location Map. The study limits extend along the existing SR 414 (Maitland Boulevard) corridor from US 441 (Orange Blossom Trail) to State Road 434 (Forest City Road). Figure 1-2 presents the Project Location Map. The approximate 2.8-mile-long study corridor generally runs along the boundary of Orange County and Seminole County and is located within the cities of Maitland (Orange County) and Altamonte Springs (Seminole County). Both CFX and the Florida Department of Transportation own portions of SR 414 within the project study limits. CFX owns and operates the SR 414 (John Land Apopka Expressway) from SR 429 to just east of US 441, and FDOT owns and operates SR 414 (Maitland Boulevard) from just east of US 441 to U.S. Highway 17/U.S. Highway 92. The existing SR 414 (Maitland Boulevard) is a four-lane divided urban principal arterial with three major signalized intersections at Bear Lake Road/Rose Avenue, Eden Park Road and Magnolia Homes Road, and an unsignalized intersection at Gateway Drive between the grade-separated intersections of SR 414/US 441 and SR 414/ SR 434. A minor grade-separated overpass exists over the Little Wekiva Canal and an access road between the Lake Lotus Park and Ride lot and Lake Lotus Park.

The PD&E Study is evaluating alternatives for a proposed grade-separated SR 414 Expressway Extension to provide system linkage between the western terminus of the SR 414 (John Land Apopka Expressway) and Interstate 4. The SR 414 Expressway Extension includes alternatives for a facility with up to two lanes in each direction from US 441 to SR 434. Project alternatives involve various configurations of grade-separated express lanes on SR 414 (Maitland Boulevard) to provide needed capacity between US 441 and SR 434 while maintaining the existing local access lanes. Alternatives considered include reversible, bi-directional and convertible express lanes along the project corridor to avoid right-of-way acquisition needs.

Prior to the PD&E Study, CFX completed the SR 414 Reversible Express Lanes Schematic Report that included an assessment of tolled, directional express lanes within the median of SR 414 (CFX 2019). The Report recommended a two-lane, reversible, grade-separated viaduct in the median of SR 414. The Report also found that a single lane bi-directional express lane would require a 75 percent wider bridge and was not considered viable.

The proposed improvements also include reconfiguring the existing at-grade SR 414 (Maitland Boulevard) to accommodate the SR 414 toll facility while maintaining two SR 414 local access lanes in each direction. The study will involve analysis of intersection improvements, bridge modifications at Lake Bosse and Little Wekiva Canal, stormwater management facilities, pedestrian and bicycle needs and access management modifications. The No-Build Alternative is a viable option throughout the study.

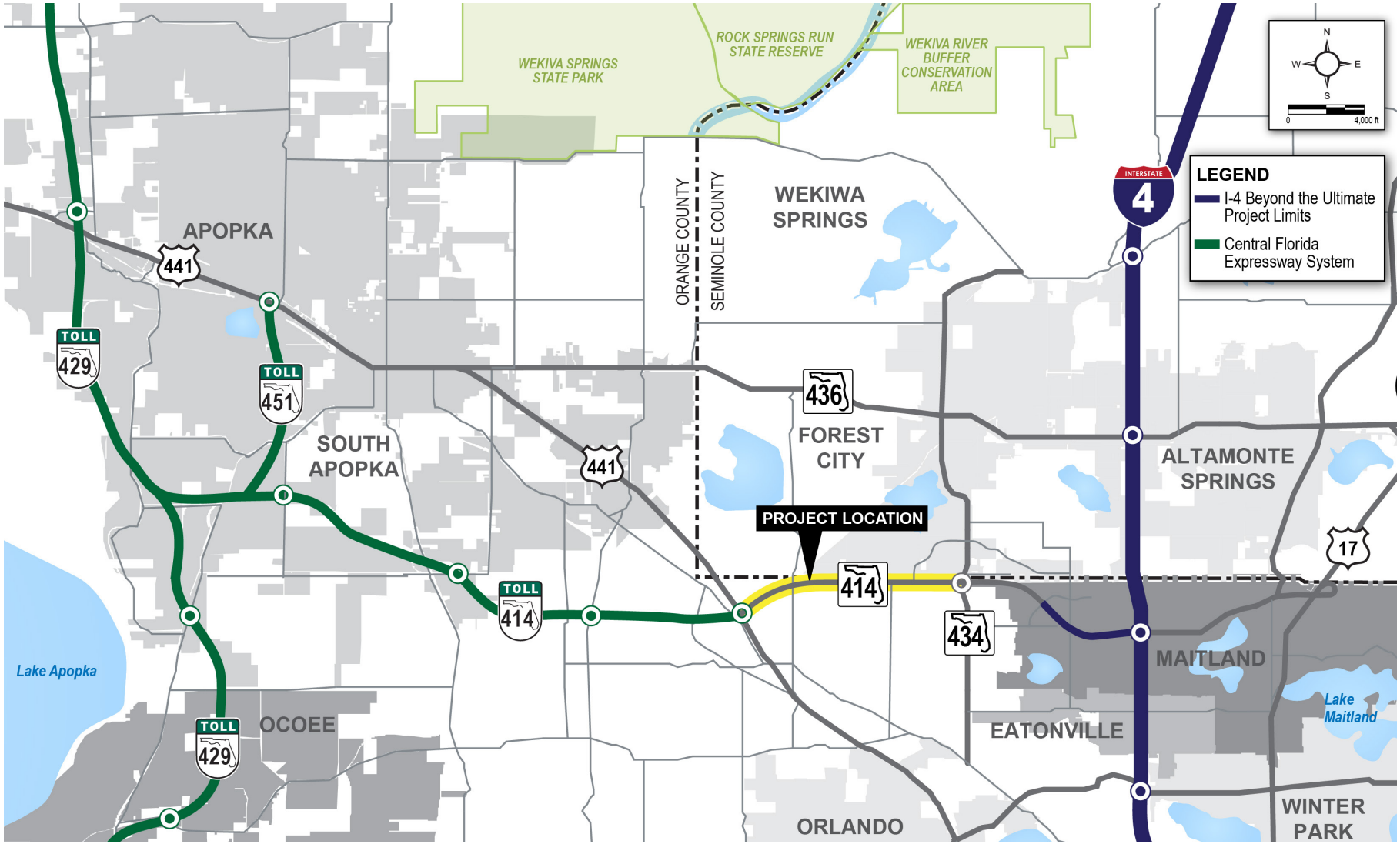

Figure 1-1. Regional Location Map

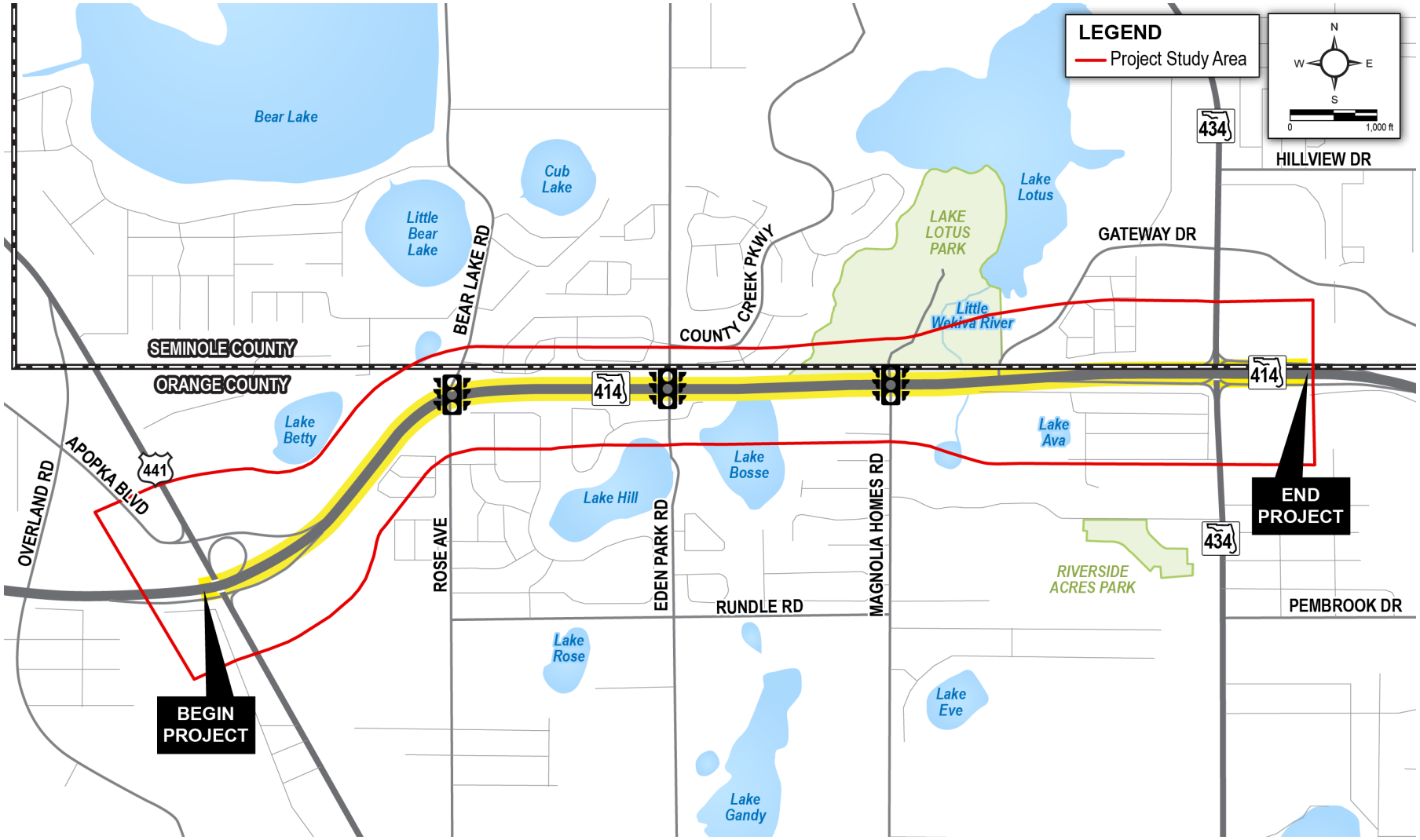

Figure 1-2. Project Location Map

1.2 Purpose and Need

The purpose of the SR 414 Expressway Extension PD&E Study is to provide needed capacity on SR 414 and improve system connectivity between SR 429 and I-4 to meet future traffic needs. The 2.8-mile-long project corridor of SR 414 is an arterial connecting two limited-access facilities. The proposed project will complete the limited-access gap between US 441 and SR 434 and provide limited-access regional connectivity between SR 429 and I-4. The proposed grade-separated SR 414 Expressway Extension will separate the through traffic from the local traffic, allowing for greater mobility and reduced congestion for both facilities. The proposed improvements are to 1) accommodate anticipated transportation demand, 2) improve safety, 3) improve system connectivity/linkage and 4) support multimodal opportunities.

1.3 Report Purpose

The purpose of this Bridge Analysis Technical Memorandum is to evaluate characteristics of any bridges resulting from the proposed preferred alternative. This document includes all new structures as well as any necessary modifications to existing structures. Refer to Appendix A for bridge concept plans.

1.4 Alternatives Considered

Alternatives were evaluated for environmental and operational constraints. An at-grade alternative within the median of SR 414 was eliminated because while it provided uninterrupted travel along SR 414, traffic from the local cross streets would not be able to cross Maitland Boulevard. Another alternative considered included an adjacent corridor to SR 414. However, because Maitland Boulevard is mostly developed, this alternative was not viable. Finally, an alternative that included individual overpasses at each of the existing intersections was also considered. However, because of the limited spacing between each intersection, this alternative was not feasible and was, therefore, eliminated.

Viable alternatives were developed and presented for public input at the Alternatives Public Workshop held on February 10, 2021. These viable alternatives included roadway concepts for the SR 414 Expressway Extension project, including the SR 414 toll lanes and the Maitland Boulevard local access lanes. The viable alternatives were updated after the Alternatives Public Meeting to reflect ongoing alternatives refinements that avoid and minimize environmental impacts.

1.4.1 Preferred Alternative

As a result of the alternatives analyses conducted for the project, a Preferred Alternative was identified for further analysis and public input. The Preferred Alternative involves an elevated SR 414 Expressway Extension toll facility to serve regional traffic and at-grade Maitland Boulevard local access lanes (non-tolled) from US 441 to SR 434. The proposed SR 414 Expressway Extension typical section for the Preferred Alternative includes the elevated SR 414 facility in the median, as four 12-foot-wide express lanes (two lanes per direction) separated by a median barrier wall. The Preferred Alternative also includes maintaining the existing Maitland Boulevard access lanes at-grade with two lanes per direction on either side and below the SR 414 Expressway Extension. The at-grade portion of the facility on Maitland Boulevard will maintain the existing pavement width (60 feet) but shifts and restripes the existing lanes to provide a 7-foot-wide buffered bike lane east of Bear Lake Road. Using these recommendations to minimize ROW and ongoing traffic analysis, the Preferred Alternative will be further evaluated as the study progresses. As part of the Preferred Alternative, operational improvements at intersections are anticipated to accommodate the elevated SR 414 Expressway

Extension while maintaining local access at cross streets. In addition, impacts to environmental resources including social, cultural, natural and physical will be considered as the Preferred Alternative is further developed.

1.4.2 No-Build Alternative

The No-Build Alternative for the study area assumes previously programmed improvements are built including widening SR 414 to six lanes (at-grade with no elevated expressway) from US 441 to SR 434 as noted in MetroPlan Orlando's 2045 Metropolitan Transportation Plan Cost Feasible Plan, Adopted December 9, 2020. The No-Build Alternative is not funded in the FDOT 5-Year Work Program, adopted July 2020 and is no longer programmed. Consistency with local transportation plans to update this change will be coordinated during the PD&E Study. The previously programmed improvements to SR 414 do not meet the future traffic needs through the year 2045 nor the purpose and need for the project to accommodate future transportation demand or improve system connectivity. An at-grade widening of SR 414 to six lanes would result in precluding a four-lane expressway within the median (two lanes per direction) or require substantial ROW impacts. Similarly, at-grade widening of SR 414 to six lanes and a two-lane expressway within the median (one lane per direction) would result in ROW impacts and impact the ability to maximize the use of the existing median to accommodate infra-structure (such as utilities and drainage needs). Therefore, the No-Build Alternative is not the Preferred Alternative. However, the No-Build Alternative shall remain under consideration throughout the PD&E Study for public input and to provide a comparison to the Preferred Alternative.

2. Existing Bridge Conditions

2.1 Overview

There are four existing bridges within the project study area. Table 2-1 summarizes current bridge condition and year of construction information.

Bridge No. 750743, at the western project limit, carries eastbound and westbound SR 414 over US 441/Orange Blossom Trail. Bridge No. 770074 carries eastbound and westbound SR 414 over Lake Bosse. Bridge No. 770075 carries eastbound and westbound SR 414 over Little Wekiva Canal. Bridge No. 770083 at the eastern project limit carries eastbound and westbound SR 414 over SR 434.

The SR 414 bridge over Lake Bosse was constructed in 2000 and is a six-span structure with two 11-foot-wide lanes in each direction, a 13.5-foot-wide inside shoulder in each direction next to the 19-foot-wide raised median, 12-foot-wide outside shoulders and a 5-foot-wide barrier-separated sidewalk in each direction.

The SR 414 bridge over Little Wekiva Canal was constructed in 2000 and is a single-span structure that has two 11-foot-wide lanes in each direction, a 13.5-foot-wide inside shoulder in each direction next to the 19-foot-wide raised median, 8-foot-wide outside shoulders and a 5-foot-wide, barrier-separated sidewalk in each direction. The bridge spans over the Little Wekiva Canal as well as a sidewalk and tram path from the parking lot to Lake Lotus Park.

The SR 414 bridge over SR 434 was constructed in 2000 and is a single-span structure that has two 12-foot-wide lanes, 12-foot-designated for future lane and 10-foot-wide outside shoulders in each direction and a 22-foot-wide median with a 19-foot-wide raised median. The bridge spans over SR 434 and is part of a single-point urban interchange.

Table 2-1. Existing Bridge Conditions and Year of Construction

Bridge No.	Mile Marker	Route Carried	Bridge Over	Direction	Sufficiency Rating (%)	Health Index	Inspection Date	Year Built
750743	MP 0.224 to 0.262	SR 414	US 441	EB and WB	90.2	99.79	2019	2009
770074	MP 37.400 to 37.534	SR 414	Lake Bosse	EB and WB	92.7	95.11	2019	2000
770075	MP 37.805 to 37.818	SR 414	Little Wekiva River	EB and WB	96.3	99.82	2019	2000
770083	MP 38.359 to 38.406	SR 414	SR 434	EB and WB	100.0	99.94	2018	2000

Notes:

EB = eastbound

MP = mile post

WB = westbound

2.2 Existing Bridge Characteristics

Existing bridge information was obtained from a field review, available data and plans. Table 2-2 provides information on detailed structure type, size and load capacity of existing bridges.

The sufficiency rating is derived from a formula that methodically evaluates factors that indicate the structure's ability to remain in service. A rating of 100 percent represents an entirely sufficient bridge, and a rating of 0 percent represents an entirely deficient bridge. Standard practice indicates that structures with a sufficiency rating of 80 percent or less are eligible for rehabilitation funding, and those less than 50 percent are eligible for replacement funding.

All four bridges listed in Table 2-1 are classified as having a Sufficiency Rating and Health Index of 90 percent or higher, and none are listed as functionally obsolete and have adequate structural capacity.

Refer to Appendix B for existing bridge plans and Appendix C for existing bridge inspection reports.

Table 2-2. Existing Bridge Characteristics

Bridge No.	Bridge Location	Number of Spans	Max. Span (feet)	Total Bridge Length (feet)	Deck Width (feet)	Min. Vertical Clearance (feet)	Superstructure Type	Substructure Type	Inventory Rating	Operating Rating	Deficiencies (Functional/Structural)
750743	US 441	1	192.42	192.42	137.89	16.5 feet	Steel Plate Girder	HP 14x89 pile bents behind mechanically stabilized earth walls	40.3	52.2	N/A
770074	Lake Bosse	6 (1 Main Span & 5 Approach Spans)	210.00	700.00	129.00	3.15 feet above El. 63.81 NGVD	Approach Span: 72-inch Florida Bulb Tee Main Span: Steel Plate Girders	20-inch-diameter steel pipe piles	48.7	80.9	N/A
770075	Little Wekiva River	1	68.90	68.90	121.0	8 feet (Sidewalk) 10 feet (Tram Pathway) 4.81 feet (Above El. 66.80 NGVD)	AASHTO Type IV Prestressed Concrete Beam	18-inch-square prestressed concrete pile bents behind MSE walls	45.7	76.2	N/A
770083	SR 434	1	244.80	244.80	117.80	16.4 feet	Steel Plate Girder	24 inch square prestressed concrete pile bents behind MSE walls	62.9	99	N/A

Note:

AASHTO = American Association of State Highway and Transportation Officials

N/A = not applicable

NGVD = National Geodetic Vertical Datum of 1929

3. Design Criteria

The design and development of the elevated expressway (hereafter referred to as the "viaduct") and modifications of the existing bridges and miscellaneous structures will follow the CFX, FDOT and AASHTO design criteria, including and not limited to the following (year/version of codes are those applicable at the time of design):

- CFX Design Guidelines
- FDOT Specifications as modified by CFX Specifications
- AASHTO Load and Resistance Factor Design Bridge Design Specifications and Interims
- AASHTO *LRFD Specifications for Structural Supports for Highway Signs, Luminaires, and Traffic Signals*
- AASHTO/AWS D1.5M/D1.5: Bridge Welding Code
- AASHTO Manual for Bridge Evaluation
- FDOT *Bridge Load Rating Manual*
- FDOT Structures Manual
- FDOT Structures Design Bulletins (available on FDOT Structures web site only)

Additional project-specific criteria include clearances below the elevated viaduct as described in the following. In addition, 42-inch-tall single slope (Index 521-428) concrete barrier shall be provided for the viaduct on both sides.

Per *FDOT Design Manual* Section 260.6, a minimum vertical clearance of 16 feet 6 inches must be provided over roadways. A minimum vertical clearance of 14 feet 0 inches is required from face of curb to the lateral offset distance for curb-and-gutter facilities and over the setback distance when a barrier is required. These requirements are illustrated in FDM Figures 260.6.4 and 260.6.5 (refer to Figure 3-1).

Lateral offset criteria for bridge piers and abutments are summarized in FDM Table 215.2.2. The applicable lateral offset depends on the location of the substructure element in question. The greater of the following is to be used as the lateral offset:

- 16 feet from edge of inside or outside travel Lane
- 4 feet from face of curb for outside auxiliary lanes
- 6 feet from edge of auxiliary lane at medians

Figure 260.6.4 Curbed Roadway ≤ 45 mph – Section through Bridge

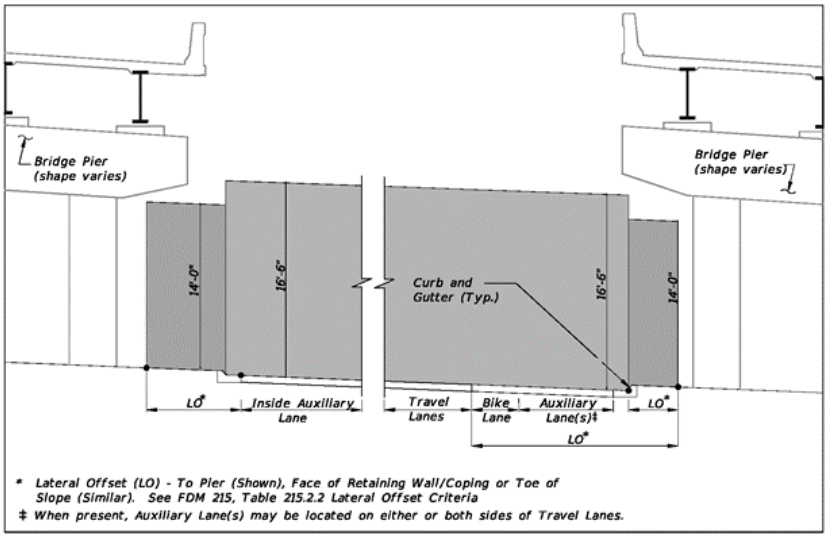

Figure 260.6.5 Curbed Roadway with Traffic Barrier

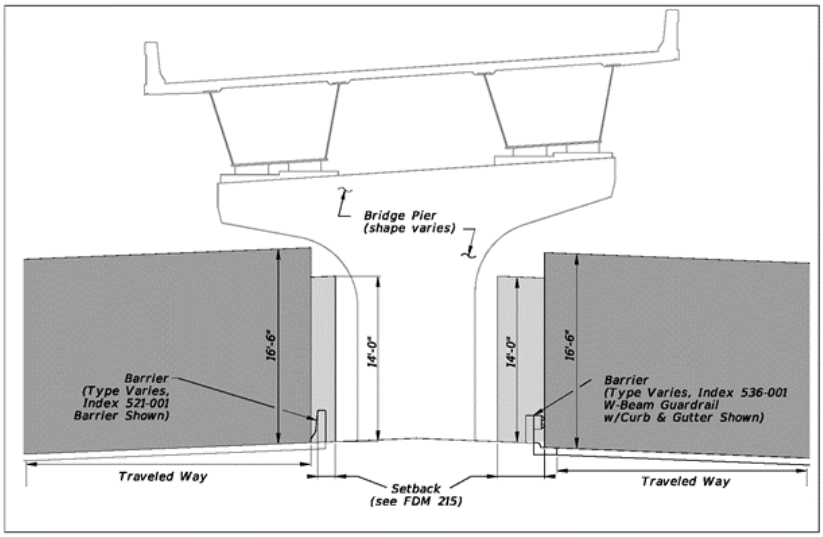

Figure 3-1. Vertical Clearance Distance Requirements

Source: FDOT Design Manual

The FDM provides the following definitions:

- **Travel Lane**: The designated widths of roadway pavement marked to carry through traffic and to separate it from opposing traffic or traffic occupying other traffic lanes. Generally, travel lanes equate to the basic number of lanes for a facility.
- **Auxiliary Lane**: The designated widths of roadway pavement marked to separate speed change, turning, passing and weaving maneuvers from through traffic. They may also provide short-capacity segments.

- **Setback**: This is the distance between the face of the barrier and the aboveground hazard behind the barrier. An adequate setback must be provided behind the barrier to ensure proper function. For flexible and semi-rigid barriers, the setback is based on deflection tolerances and is required to prevent the barrier from contacting aboveground hazards or breakaway devices. For rigid barriers, the setback is required to keep the area above and behind the barrier face free of obstructions that could penetrate or damage the vehicle compartment.

The minimum barrier setback requirements are provided in FDM Table 215.4.2. For a standard guardrail (W-beam with post spacing of 6 feet 3 inches), the setback distance is 5 feet 0 inches. A rigid concrete barrier (less than 40 inches high) has a setback distance of 1 feet 6 inches for design speed more than 45 mph and 0 inches for design speed less than or equal to 45 mph. Rigid concrete barrier more than 40 inches high requires 0 inches in setback.

4. Bridge Analysis

As part of the SR 414 Expressway Extension PD&E Study, viable alternatives for the proposed grade-separated SR 414 Expressway Extension were reviewed to provide system linkage between the western terminus of the SR 414 (John Land Apopka Expressway) and I-4. All typical section options require widening within the ROW and, therefore, resulted in a variety of elevated expressway alternatives, as presented in Section 1.4.

This section reviews the proposed and existing bridges for the Preferred Alternative. The Preferred Alternative consists of an elevated SR 414 Expressway in the median from east of US 441 to west of SR 434, with four 12-foot-wide express lanes (two lanes per direction) separated by a median traffic railing. The viaduct does not have any structural impacts to the existing bridge at US 441. The viaduct requires modifications to existing six-span SR 414 bridge over Lake Bosse. The viaduct will straddle the existing SR 414 bridge over Little Wekiva River using pier placements beyond existing bridge and approach slab ends. The existing lane and shoulder configuration on the SR 414 bridge over SR 434 will be modified to accommodate the express lanes and the auxiliary on/off lanes to the at-grade Maitland Boulevard.

Figure 4-1 shows the location of the proposed elevated expressway and existing bridges impacted by the proposed improvements.

4.1 SR 414 Elevated Expressway (Viaduct)

The proposed elevated expressway is more than 1.67 miles (8,842.3 feet) long. The elevated expressway will cross four intersections (at Bear Lake Road, Eden Park Road, Magnolia Homes/Lake Lotus Park Road, and Gateway Drive), and it will span two water features (at Lake Bosse and Little Wekiva River). The alignment will follow the existing SR 414 alignment in the median, which includes a curved alignment at the beginning of the viaduct followed by a generally tangent alignment to the eastern terminus. The anticipated span configuration is based on economical ranges for applicable structures type and constructability considerations. Span selection at Lake Bosse required particular attention based on knowledge from challenges faced at the time of its original construction. Proposed viaduct spans range from approximately 123 feet to 300 feet. Appendix A includes a plan view of the proposed alignment.

The relic sinkhole that formed Lake Bosse is several hundred feet deep and infilled with soft, compressible organic soils. The existing SR 414 (Maitland Boulevard) construction over Lake Bosse encountered foundation construction challenges that required extremely long piles (more than 600 feet). To further evaluate foundation concerns and identify optimal foundation locations and capacities, existing borings and pile driving data were reviewed and three additional soil borings at Lake Bosse were conducted. Per the project's *Preliminary Geotechnical Report* (GEC 2020), the borings encountered highly variable soil profiles. The report determined the need for a 300-foot-long span to cross the throat of the relic sinkhole where conditions are highly variable and could result in excessive pile lengths.

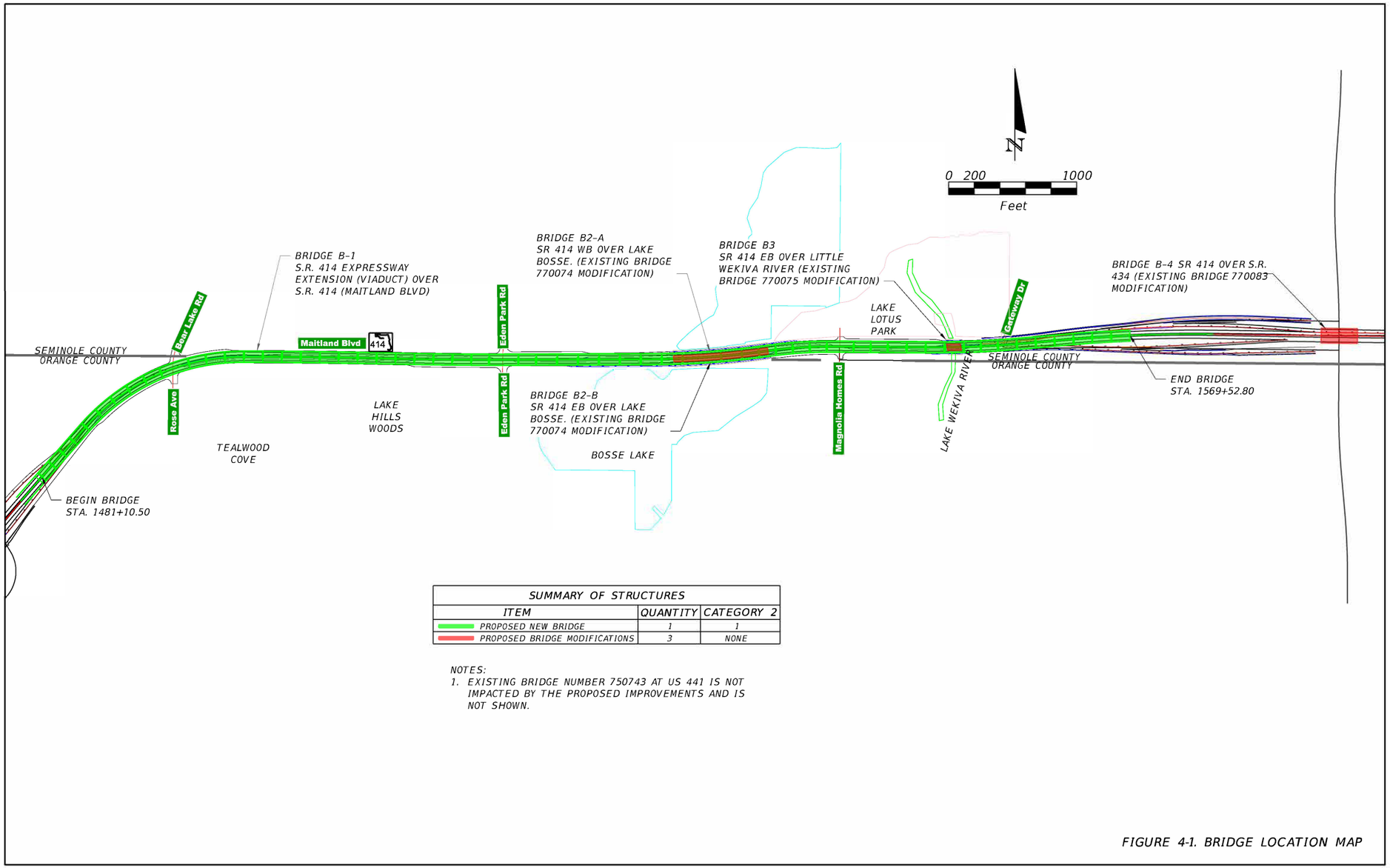

Figure 4-1. Bridge Location Map

A variety of superstructure systems are generally viable for the elevated expressway including Florida-I beams, Florida U-beams, steel plate or steel tub girders and segmental concrete box girders. These alternatives were reviewed for aesthetics, constructability, economic and maintenance of traffic considerations. The significant length of the elevated expressway bridge lends itself to the economy of scale needed for a segmental box girder alternative. Furthermore, a constant-width cross section and ability to use overhead construction equipment to erect segmental boxes also favors construction within a very tight SR 414 median from an MOT perspective. It also provides improved aesthetics. In contrast, an I-girder system, which is generally considered more cost-effective, is also viable but will require the use of mixing concrete and steel girders because of the proposed span configuration needs. Curvature and larger spans will require the need for temporary shoring and falsework. This will have greater impact on MOT on SR 414, especially at the intersections. Steel tub girders and concrete U-girders will also require temporary shoring and falsework and also do not appear to provide any cost or aesthetic advantages to the spectrum of I-girder and segmental box girder alternatives considered. Therefore, the evaluation primarily focused on a segmental box girder and an I-girder-type structural system for the Preferred Alternative for the purpose of this document.

The Segmental Concrete Box Girder Alternative consists of 9-foot-deep twin box girder system, as shown on Figure 4-2. The twin-box configuration will provide a total bridge deck width of 89 feet, with two 6-foot-wide inside and two 12-foot-wide outside shoulders with two 12-foot-wide travel lanes in each direction. A single two-cell box girder was considered but eliminated because it requires erection of the entire segment, which significantly increases pick weight and also impacts both directions of traffic on SR 414/Maitland Boulevard because of overhead work restrictions. Segmental concrete construction uses span-by-span and balanced cantilever methods of construction, with the span-by-span method being more economical. The proposed viaduct lends itself to span-by-span construction with spans ranging up to 165 feet for most of the corridor and balanced cantilever construction required for longer spans over intersections at Bear Lake, Eden Park and Magnolia Homes roads and at Lake Bosse to span the relic sinkhole. The 300-foot-long span is also estimated to require a three-span unit with a deeper box section varying from 16 feet at piers to 12 feet at the midspan. At the intersections 230-foot-long spans will also require a slightly deeper box section, varying from 11 feet 6 inches at the pier to 9 feet at the midspan.

The I-Girder Alternative superstructure would also provide the same 89-foot-wide typical section. To support the proposed 8½-inch-thick deck, nine I-beams would be required typically. The Florida I-beams would be limited to approximately 200-foot-long maximum span and type, and spacing could vary with the spans but could largely be uniform. However, spanning the intersections and the relic sinkhole at Lake Bosse would require special, deeper sections with either post-tensioned I-beams or steel plate girders and as described earlier would be less desirable from constructability and aesthetic perspectives. One of the advantages of the I-Girder Alternative is that it can be used in conjunction with inverted-tee pier caps, which allow for a shallower pier cap depth and result in a relatively lower vertical profile for the elevated expressway. Refer to Figure 4-3 for depiction of the I-Girder alternative.

Choice of substructure for the viaduct is influenced by available space to construct the foundations while avoiding ROW impacts. The need to accommodate the elevated expressway and the at-grade Maitland Boulevard within the existing ROW requires the viaduct to be supported on hammerhead piers. This allows a portion of the at-grade SR 414 roadway to be accommodated under the footprint of the 89-foot-wide elevated expressway for most of the viaduct length.

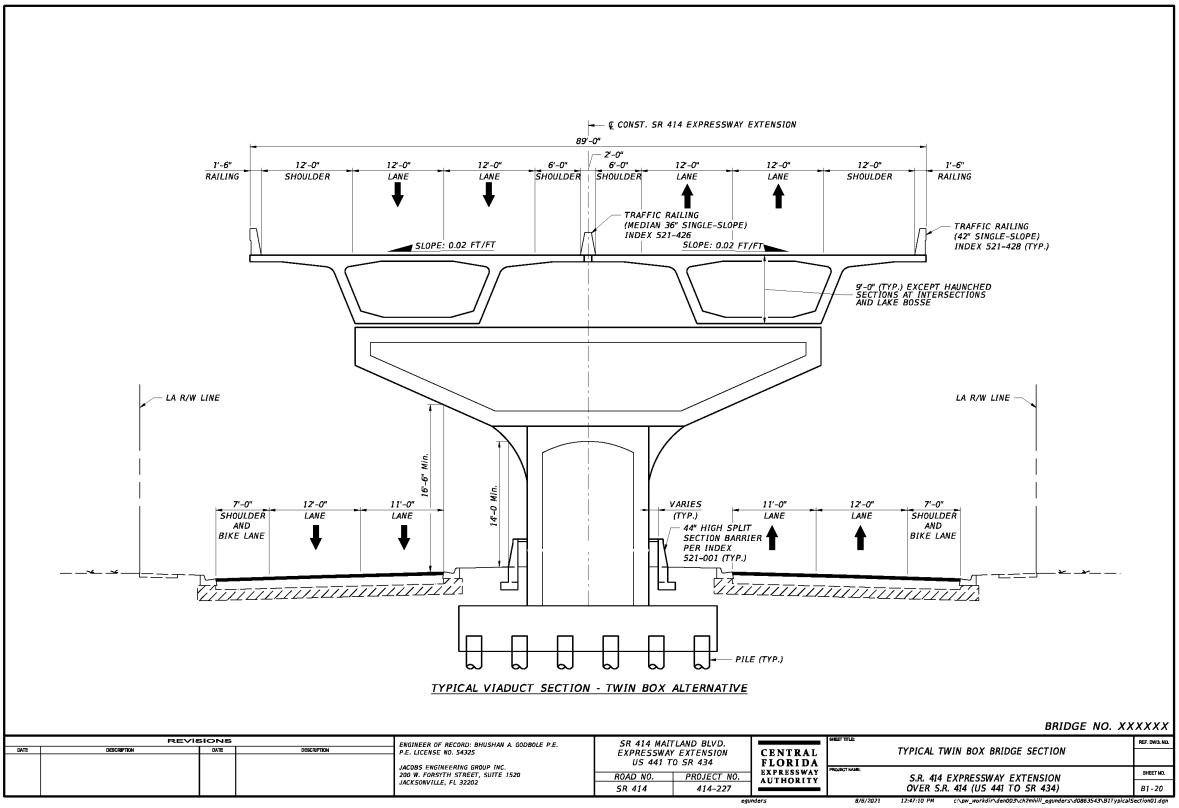

Figure 4-2. Proposed Viaduct Section with Twin Box Alternative

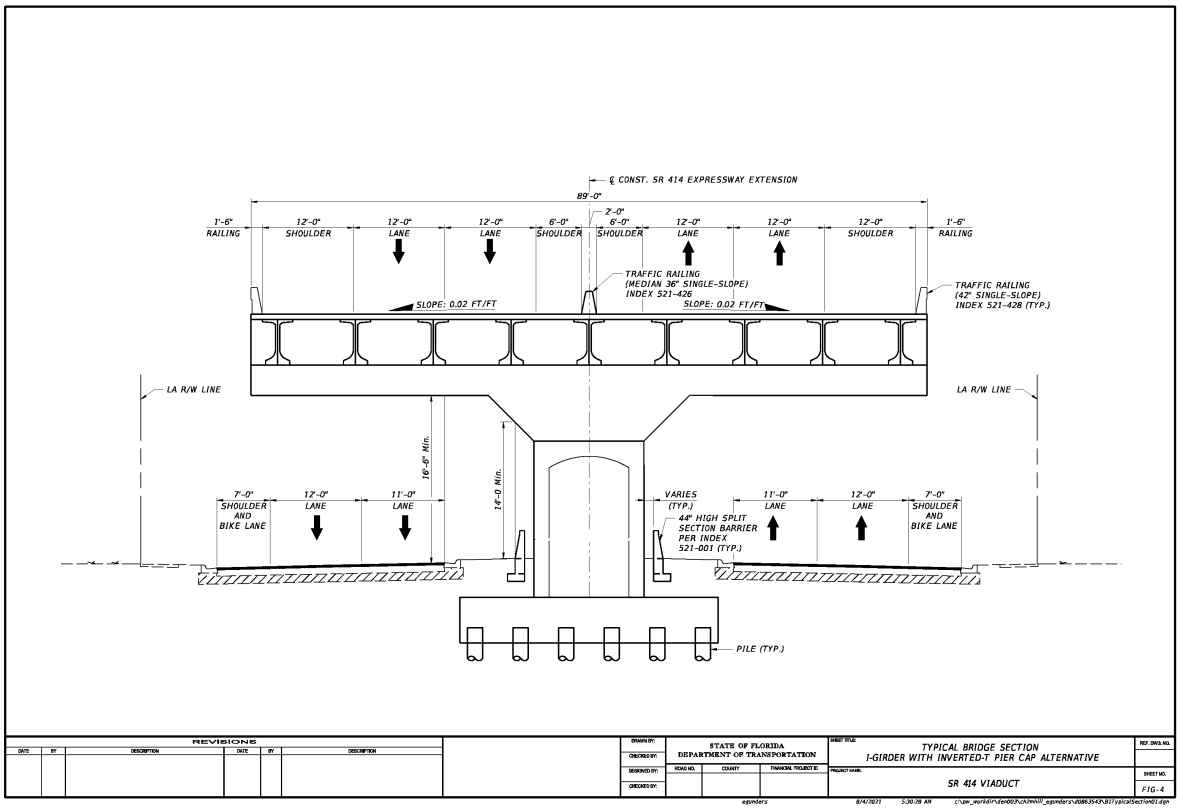

Figure 4-3. Proposed Viaduct Section with I-Girder Alternative

The proposed substructure includes hammerhead piers supported on a pile cap and deep pile foundations. Final configuration of the pile cap, number and type of piles will vary throughout the alignment based on span and site conditions. Pile type options for the typical viaduct spans will include 18-inch and 24-inch sq. precast prestressed concrete and 20-inch and 24-inch diameter closed-end steel pipe, considered as displacement piles. Non-displacement H-piles typically have lower capacity but can be considered at locations where vibrations and noise are a concern, given the proximity of residences and businesses in the vicinity of the elevated expressway. For segmental superstructure construction with higher deadloads, 18-inch H-piles maybe also be considered in the final design to reduce the number of piles and reduced cap size, given their higher capacity than the standard 14-inch H-piles.

In the *Preliminary Geotechnical Report* (GEC 2020), 20-inch or 24-inch-diameter closed-end steel pipe piles are recommended for Lake Bosse given the highly variable soil profiles and need for longer piles. Because the environmental classification at this site is extremely aggressive, and being a water crossing, piles would need to be concrete-filled and steel-reinforced per FDOT *Structures Design Guidelines* (FDOT 2021). However, because the extremely aggressive condition is attributed to a low pH, pipe piles with sacrificial thickness maybe feasible and could be further investigated during the design phase with necessary coordination and approval with FDOT.

The geotechnical report also recommends, at a minimum, using 100 percent pile driving analyzer at the piers that straddle the relic sinkhole (the 300-foot-long main span) to help avoid driving deeper than necessary in the bearing layer. The use of a higher resistance factor of 0.75 would allow a higher factored design load, reducing the number of piles. Table 4-1 lists preliminary pile capacities.

Table 4-1. Preliminary Capacities of Piles

Steel Pipe Pile Size	Preliminary Nominal Bearing Resistance (tons)
20 inches	200
24 inches	250

4.1.1 SR 414 Over Lake Bosse Bridge

Existing SR 414 Over Lake Bosse Bridge (Bridge No. 770074) was constructed in 2000 to span Lake Bosse, which includes a deep relic sinkhole that has been filled with organic material (peat/muck) over time. The bridge spans this feature using steel plate girders spanning 210 feet; the remaining spans of approximately 100 feet consist of 72-inch-wide Florida bulb tee girders supporting an 8-inch-thick, cast-in-place concrete deck. The substructure consists of five pile bents founded on 20-inch-diameter pipe piles. The total bridge width is 129 feet with a raised median. The bridge typical included 5-foot-wide outside sidewalks, 8-foot-wide outside shoulders, 22-foot-wide median, one future 14-foot-wide lane and two 12-foot-wide lanes in each direction. Current existing lane configuration includes two 11-foot-wide lanes in each direction with the remaining deck striped off to accommodate future needs. The low member clearance is 3.15 feet above the 50-year design flood elevation of 63.81 feet NGVD.

The proposed typical section for this crossing includes modification to the existing bridge by removing almost 40 feet of the structure in the median. This modification would leave the current lane configuration but would modify the inside striped shoulders and raised median to allow for viaduct piers in the median (refer to Figure 4-4 with the segmental option shown). Appendix D includes the load rating for the proposed condition. Lake Bosse is a non-navigable waterway for both recreational and commercial

use, which allows for viaduct pier placement to avoid the existing piers. Figure 4-5 shows the locations of the proposed piers, as well as the existing piers.

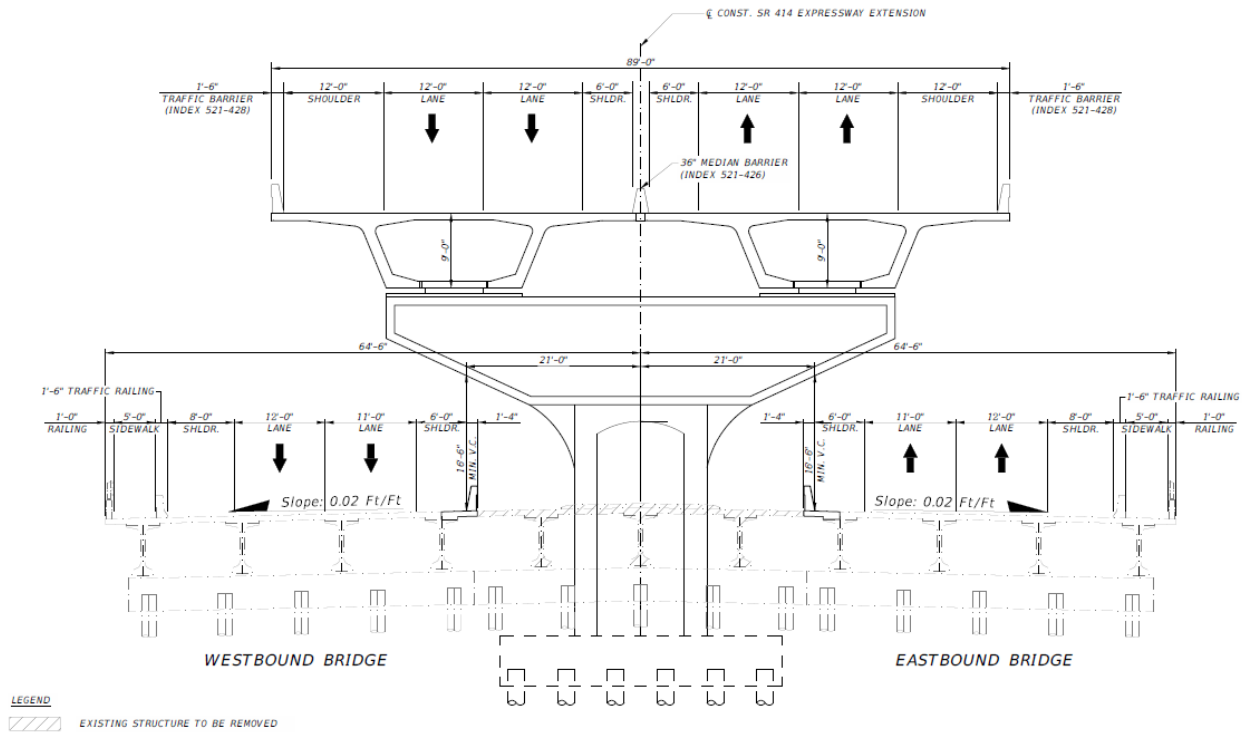

Figure 4-4. Bridge Typical Section at Lake Bosse

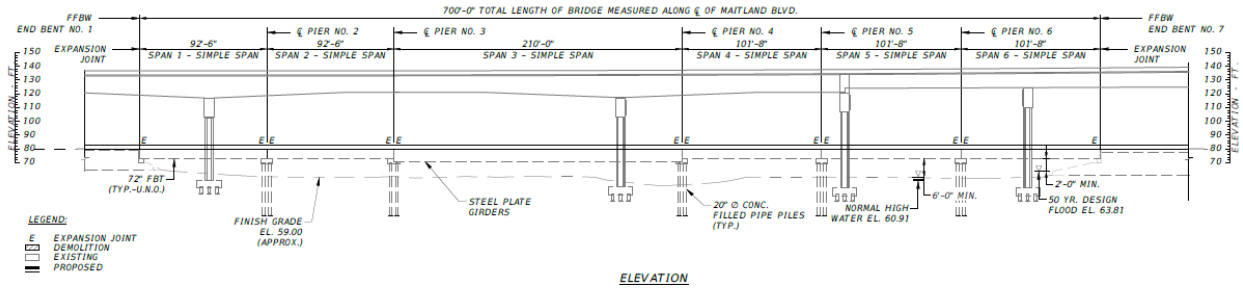

Figure 4-5. Bridge Pier Placement at Lake Bosse

4.1.2 SR 414 Over Little Wekiva River Bridge

The existing SR 414 Over Little Wekiva River Bridge (Bridge No. 770075) was constructed in 2000 and consists of a single-span AASHTO Type IV prestressed concrete beams supporting an 8-inch cast-in-place concrete deck. The bridge is founded on 18-inch-square prestressed concrete pile supported end bents. Total deck width is 121 feet with two 5-foot-wide outside sidewalks, with original planned lanes of one 14-foot-wide lane and two 12-foot-wide lanes with a 4-foot-wide outside shoulders and a 22-foot-wide median. Current lane configuration includes two 11-foot-wide lanes in each direction with the remaining deck striped off to accommodate future needs. The minimum low member vertical clearance is 4.81 feet above the 50-year high water level elevation of 66.80 feet NGVD.

The SR 414 Over Little Wekiva River Bridge span is slightly less than 69 feet to allow both viaduct alternatives to span over the bridge, including the approach slabs, with no impacts to the river. Viaduct pier columns will be protected with inside barriers on each side following the roadway barrier. Refer to Figures 4-6 and 4-7 for Elevation and Section view, respectively.

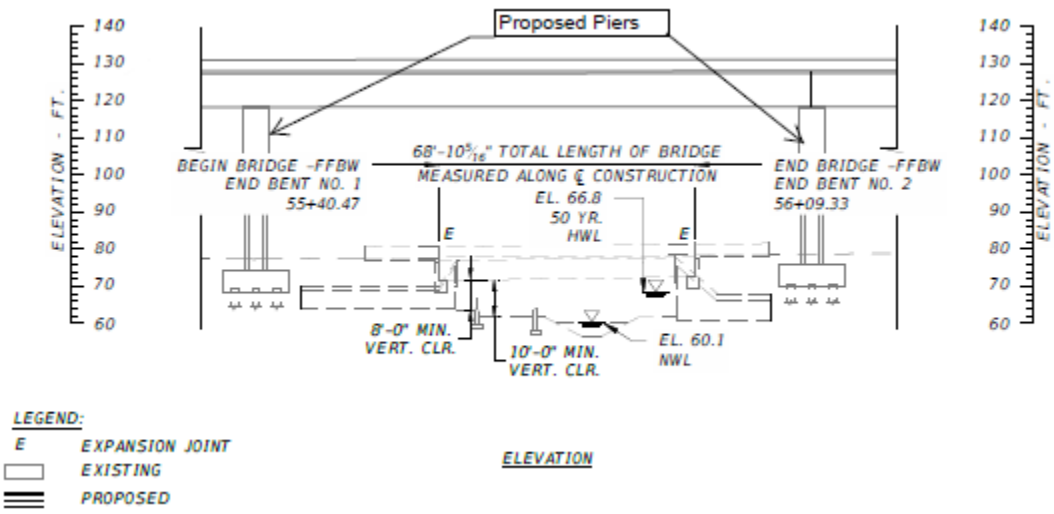

Figure 4-6. Bridge Pier Placement at Little Wekiva River Bridge

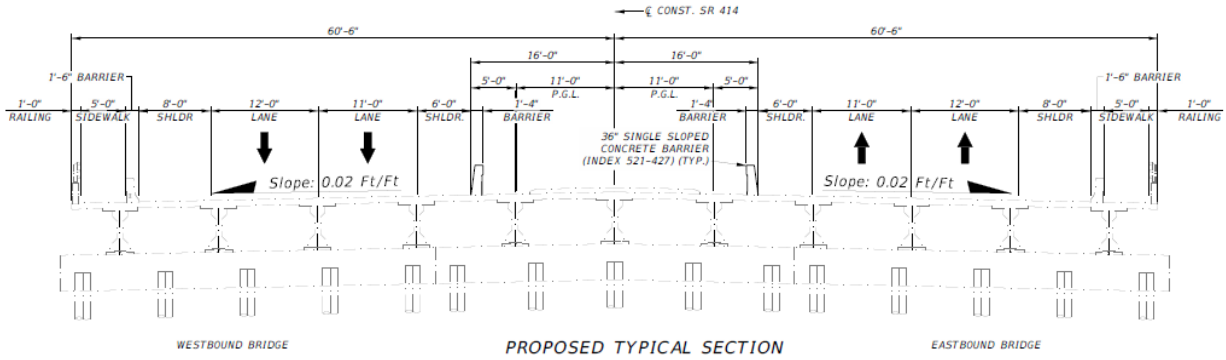

Figure 4-7. Bridge Typical Section at Little Wekiva River Bridge

4.1.3 SR 414 Over SR 434 Bridge

The existing SR 414 Over SR 434 Bridge was built in 2000 as a single point intersection and consists of a single-span steel plate girder superstructure spanning 245 feet. Ten steel plate girders support a 117-feet 1-inch-wide and 8-inch-thick cast-in-place concrete deck with a 19-foot-wide raised median. The proposed typical section would remove the raised median and provide barrier-separated eastbound and westbound lanes. The proposed configuration, while maximizing the use of existing bridge width, meets FDOT Design Manual Urban Criteria outlined in FDM Figure 260.1.4, but not the CFX Expressway Criteria or FDM Limited Access Facilities Criteria as discussed in the Preliminary Engineering Report.

The eastbound section will consist of an 8-foot-wide outside shoulder, three 12-foot-wide lanes and a 6-foot-wide inside shoulder. The westbound typical section consists of an 8-foot-wide outside shoulder, two 12-foot-wide lanes, one 20- to 24-foot-wide variable lane in the middle and a 6-foot-wide inside shoulder. End bents are founded on 24-inch square prestressed concrete piles. The minimum vertical clearance is 16 feet 7¾ inches.

Figure 4-8 for the proposed bridge typical section.

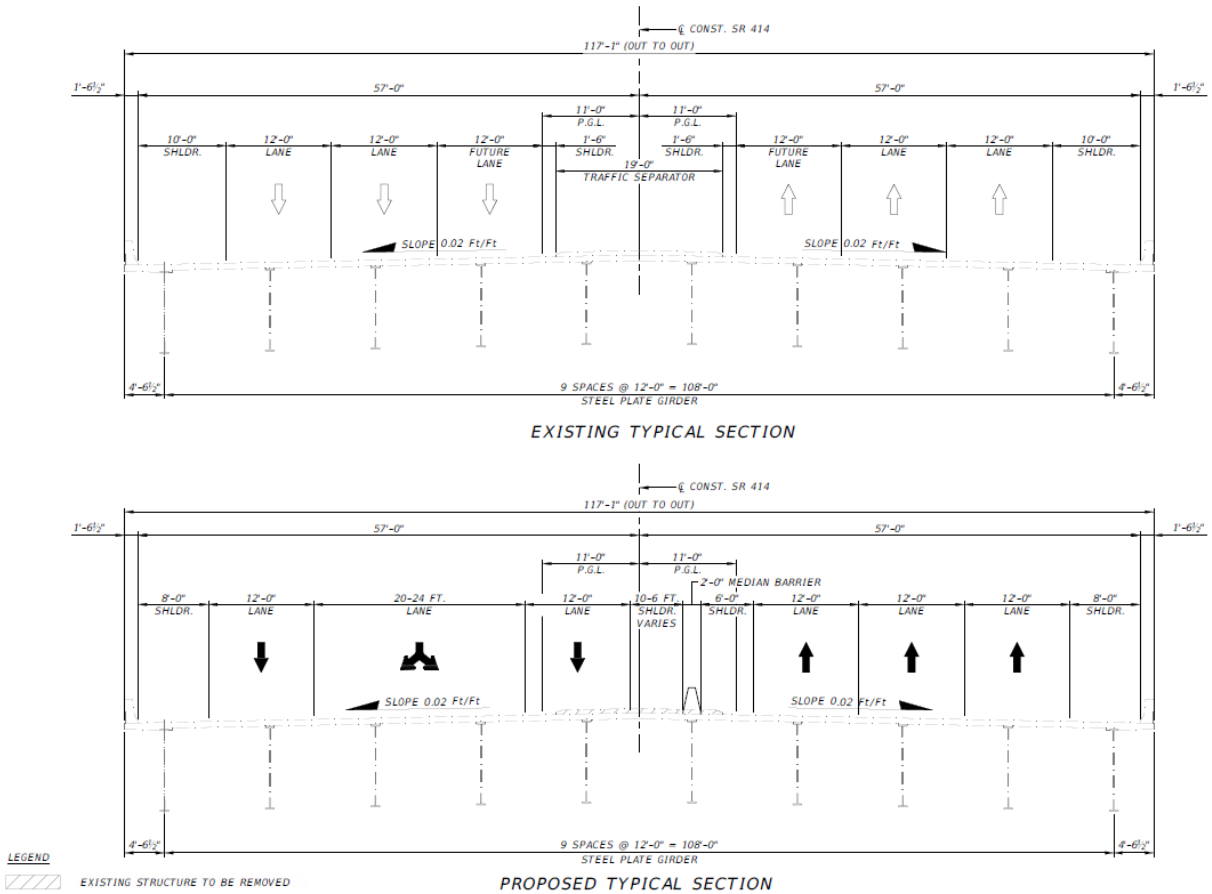

Figure 4-8. Bridge Typical Section at SR 434

4.2 Retaining Walls

Begin and end bridge of the viaduct will include wraparound MSE walls at both ends to tie the elevated roadway to the bridge approaches. Roadway tie-ins include SR 414 over US 441 (Orange Blossom Trail) on the west end and SR 414 over SR 434 (Forest City Road) on the east end.

4.3 Aesthetic Considerations

CFX has developed a draft aesthetic guide that provides treatment considerations and requirements for the corridor to blend the SR 414 expressway extension and the existing aesthetic treatments along the corridor (CFX 2020).

The viaduct with twin segmental concrete box would provide a pleasing shape for the superstructure and achieve the aesthetic requirements outlined in the CFX guide (refer to Figure 4-9). The finishes and

textures for the box, traffic railing, piers and MSE walls would match the existing expressway (refer to Figure 4-10).

Other proposed elements in the corridor include noise walls. Aesthetic requirements for those elements are also included in CFX's Aesthetic Guide; examples are shown on Figures 4-11 and 4-12.

Figure 4-9. Aesthetics: Superstructure Considerations

SR 414 Center Pier

Figure 4-10. Aesthetics: Substructure Considerations

Figure 4-11. Aesthetics: Misc. Column Considerations

Figure 4-12. Aesthetics: Noise wall Considerations

4.4 Constructability

The proposed bridge construction consists of construction of a long new viaduct structure in the median of existing four-lane divided SR 414 (Maitland Boulevard) roadway section. It also includes converting an existing single bridge at Lake Bosse into two separate bridges by removing the existing superstructure median to accommodate the proposed viaduct substructures. The long viaduct span arrangement eliminates any direct impact to existing Little Wekiva River Bridge. Bridges at either ends of the project limits at US 441 and SR 434 have little to no impact based on the project approach described in the Preliminary Engineering Report. The US 441 Bridge will not require any structure modifications. The SR 434 Bridge will require removal of existing median traffic separator and installation of new median traffic railing. This section presents an overview of conceptual constructability coordination based on the proposed nature of new bridges and modifications to any existing bridges.

Modifications to Lake Bosse Bridge require preserving existing pile bents within the median to maintain lateral stability and integrity of the existing bridges in their final proposed condition. It is anticipated that removal of existing superstructure and construction of new substructures can be accomplished within the median with use of temporary work platform. Modifications to the Little Wekiva River Bridge and the SR 434 Bridge are minor and do not require any special considerations.

Viaduct substructure construction involves construction of foundations within the SR 414 median at multiple locations. Critical temporary walls will be required to facilitate excavations for foundations. Foundation construction will occur in the vicinity of adjacent residential neighborhoods and will require vibration and settlement monitoring and mitigation considerations. Non-displacement H-piles could be considered for majority of the bridge foundations, except for the Lake Bosse Bridge. The preliminary geotechnical report recommends using closed-end pipe piles as a result of known challenging geology from relic sinkhole characteristics, conducting soil mapping using available soil borings and taking new borings (GEC 2020).

Conventional ground-mounted cranes placed within the median work zone can be used to perform pile driving and center portion of the hammerhead pier columns. The cantilever portions of pier caps will require post-tensioning because of the extent of overhangs and loads being supported. The roadway profile has been set with allowance to hang forms for cast-in-place cantilever overhang wings to provide maximum flexibility to the contractor to provide an economical alternative. Any activities that involve construction over active traffic lanes will require detours, as described in Section 4.5, Maintenance of Traffic.

Viaduct superstructure construction involves consideration of I-girder alternatives as well as the Precast Segmental Box Girder Alternative discussed in Section 4.1. Use of conventional ground-mounted cranes is not considered feasible for erection of superstructure, and self-launching specialty girder equipment supported on completed substructures is anticipated to minimize impacts to SR 414 traffic. Beam shifter can be used for erection of I-girders, which can be delivered along SR 414 at nighttime and then shifted into place. Similarly, use of overhead gantries is envisioned to erect the precast segmental super-structure. It is anticipated that the segments can be delivered from completed superstructure in the back spans. It is envisioned that the precast segmental construction will maximize working from the top and will minimize impacts to at-grade SR 414. Use of segmental construction also eliminates the need for deck forming and associated impacts from deck construction inherent in the I-Girder Alternative. The overall bridge width is significantly large and, therefore, a twin box girder system is anticipated that will allow construction of one side of the span at a time, thus limiting nighttime detours only to one-direction traffic, as described in Section 4.5.

Span lengths for the viaduct vary from 123 feet to 300 feet. Span-by-span construction is economical for span lengths up to 165 feet whereas balanced cantilever construction will be required for spans longer than 165 feet. Intersections at Bear Lake Road, Eden Park Road, Magnolia Homes Road and a 300-foot-long span over Lake Bosse will required balanced cantilever construction.

Refer to Figure 4-13 for additional construction sequencing illustration.

Planning-level cost impacts of these constructability considerations have been included in the opinion of probable cost in Section 5.

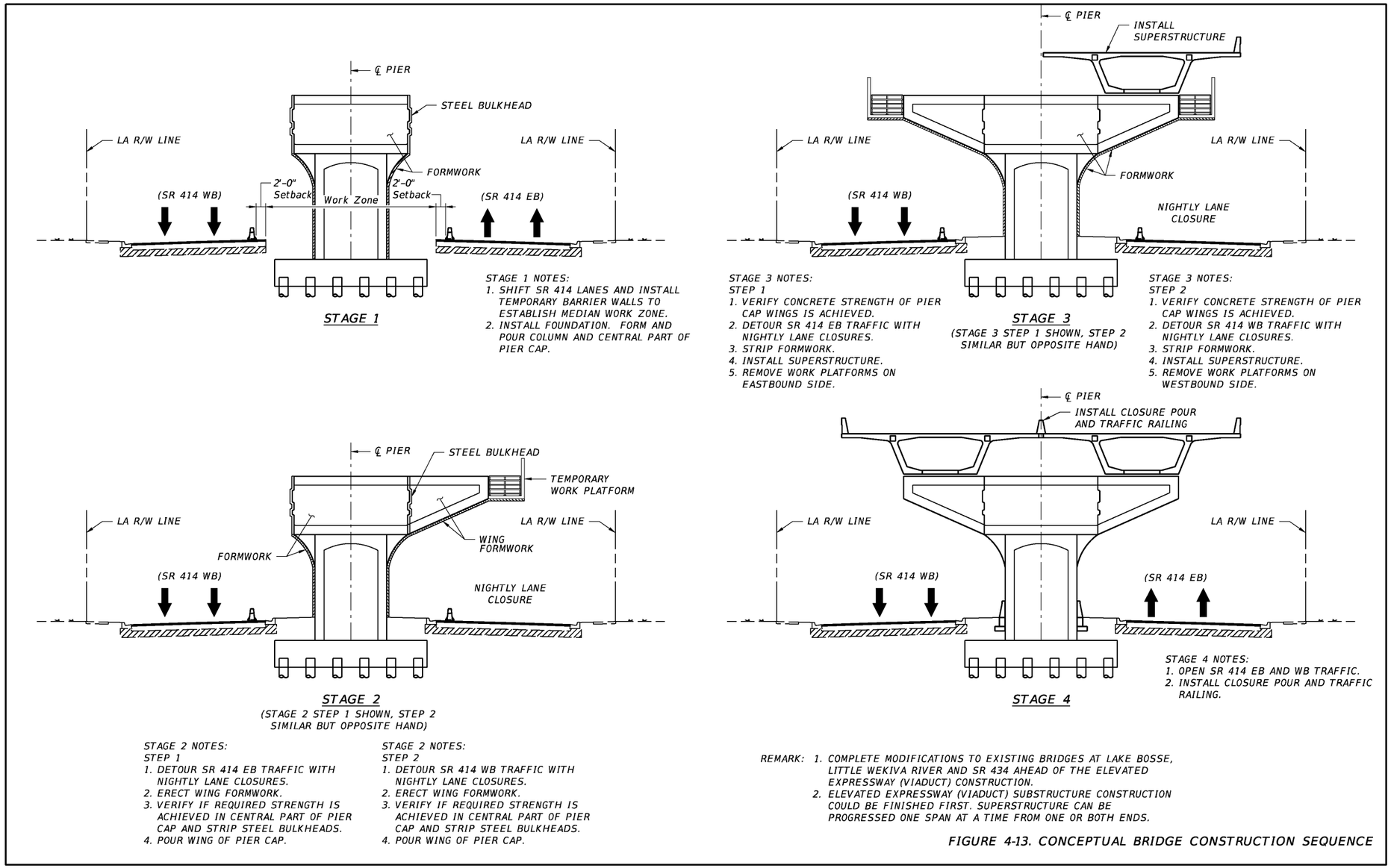

Figure 4-13. Conceptual Bridge Construction Sequence

4.5 Maintenance of Traffic

SR 414 traffic will need to be maintained. Construction of the proposed viaduct will require using night-time detours of both lanes in one direction at a time to allow construction of pier cap overhangs and bridge superstructure, as described in Section 4.4. Figure 4-13 shows anticipated MOT impacts because of substructure and superstructure construction. This illustration primarily addresses the viaduct construction impacts to traffic along SR 414 in eastbound and westbound directions. Additionally, during superstructure erection of the span over the intersections, limited nighttime detours will be needed for turning movements from the side streets to either direction of SR 414 and side-street through movements. Accelerated Bridge Construction techniques should be considered during project design phase to further minimize MOT disruptions.

5. Bridge Summary and Cost Estimate

In summary, the twin box, precast segmental structure supported by hammerhead piers is envisioned as a reasonable alternative for the elevated expressway and the corresponding structure depths have been used conservatively in setting the vertical profiles. Refer to Appendix E for calculations and cost backup data.

Bridge modifications will be necessary at existing bridges crossing Lake Bosse, Little Wekiva River and SR 434. The bridge at US 441 will have no structural impacts from the proposed improvements.

Table 5-1 summarizes proposed bridge characteristics, and Table 5-2 provides bridge summary and opinion of probable costs based on the bridge analyses conducted as part of this PD&E study. During the final design phase, the specific attributes of the recommended bridge types and conforming roadway alignments will be determined. Estimated probable costs have been presented based on Chapter 9 of FDOT *Structures Design Guidelines* and engineering judgment for site-specific factors, such as need for temporary shoring, phased construction, curved girders, construction over water, access, specialty equipment and other constructability considerations as appropriate.

Preliminary extent of retaining walls have been included within roadway estimates.

Table 5-1. Proposed Bridge Characteristics

Location			Geometrics					Alignment					Structural					
					Shoulder Width (ft)				Lateral Offset (ft)									
Bridge ID No.	Bridge Location	Direction	Structure Length (ft)	Deck Width (ft)	Inside	Outside	No. of Lanes	Skew Angles (Degrees)	Inside (LT)	Outside (RT)	Min. Vertical Clearance (ft)	Underneath Roadway Designation	Number of Spans	Max. Span (ft)	Superstructure Type	Exterior Beam Type	Substructure Type	Bridge Category [a]
B-1	SR 414 Express Viaduct Over S.R. 414	EB & WB	8842.3	89.00	6	12	4	0	(b)	(b)	16.50	Highway	58	300.00	Twin Precast Segmental Box Girders	Box Girder	Hammer Head Pier with PT Piercap on 24-inch Steel Pipe Piles	2
B-2A (770074L)	SR 414 Over Lake Bosse (Reconstruction)[c]	WB	700.0	48.84	6	8	2	0	N/A	N/A	2.00	N/A	6	210.00	72-inch Florida Bulb Tee and Steel Plate Girders with 8-inch Deck	FIB-72	20-inch Concrete-filled Pipe Pile Bents	1
B-2B (770074R)	SR 414 Over Lake Bosse (Reconstruction)[c]	EB	700.0	48.84	6	8	2	0	N/A	N/A	2.00	N/A	6	210.00	72-inch Florida Bulb Tee and Steel Plate Griders with 8-inch Deck	FIB-72	20-inch Concrete-filled Pipe Pile Bents	1
B-3 (770075)	SR 414 Over Little Wekiva River (Modification)	EB & WB	68.9	121.00	6	8	4	0	N/A	N/A	4.80	N/A	1	68.90	Prestressed Concrete Beams with 8-inch Deck	AASHTO Type IV	18-inch Sq. Prestressed Concrete Pile Bent Behind MSE Walls	1
B-4 (770083)	SR 414 Over 434	EB & WB	245.0	117.08	6	8	6	0	99.9[c]	7.5	16.65	Highway	1	245.00	Steel Plate Girders with 8-inch Deck	N/A	24-inch Sq. Prestressed Concrete Pile Bent Behind MSE Walls	2

[a] Category 1 or 2 as defined in FDM Section 121.3.1

[b] Abutments and Piers will be located 2 ft minimum behind the face of barrier walls to provide shielding for vehicular purposes and provide optimum span arrangement for economy. Lateral Offset as applicable per Fig. 3.1

[c] Value of 99.9 indicates open median

Notes: EB = eastbound, WB = westbound, NB = northbound, SB = southbound, FIB = Florida-I Beam, PT = post tension

Table 5-2. Bridge Summary and Opinion of Probable Cost

Bridge ID	Description	Length (ft)	Avg Width (ft)	Area (SF)	Cost/SF [a]	Bridge Cost
B-1	SR 414 Express Viaduct Over SR 414	8,842	89.00	786938	187	$ 147,157,406
B-2A (770074L)	SR 414 Over Lake Bosse (Reconstruction)[c]	700	45.83	32081	48	$ 1,536,713
B-2B (770074R)	SR 414 Over Lake Bosse (Reconstruction)[c]	700	45.83	32081	48	$ 1,536,713
B-3 (770075)	SR 414 Over Little Wekiva River (Modification)	68.86	121.00	8332	8	$ 68,750
B-4 (770083)	SR 414 Over SR 434 (Modification)	Includes cost for the median removal modification				$ 285,000
					SubTotal[e]	**$ 150,584,582**
General	Contingency [b]	10%				$ 15,058,458
General	Mobilization	10%				$ 16,564,304
					Probable Bridge Construction Cost[d]	**$ 182,207,344**

[a] Bridge unit costs based on *Structures Design Guidelines* (Chapter 9, Bridge Development Report) cost estimating guidelines and unique factors affecting the proposed construction based on engineering judgement.

[b] Cost of bridge deck drainage conveyances, other miscellaneous structures, riprap protection, critical temporary walls, and bridge-related unknowns, which can not be quantified at this time, are included within the contingency allowance.

[c] Existing bridge 770074 at Lake Bosse will be split into left (L) and right (R) bridges and denoted as 770074L and 770074R, respectively.

[d] Retaining walls included within roadway estimate.

[e] Refer to Preliminary Engineering Report for the overall summary of all the project costs including bridge, presented using CFX template.

6. References

American Association of State Highway and Transportation Officials (AASHTO). 2018. *The AASHTO Journal*. "Studies Say Lower Speed Limits Will Help Improve Roadway Safety". August 31. https://aashtojournal.org/2018/08/31/studies-say-lower-speed-limits-will-help-improve-roadway-safety

American Association of State Highway and Transportation Officials (AASHTO). 2018. *The Manual for Bridge Evaluation 3rd Edition*.

American Association of State Highway and Transportation Officials (AASHTO) and American Welding Society (AWS). 2020. *Bridge Welding Code*. AASHTO/AWS D1.5M/D1.5 An American National Standard.

American Association of State Highway and Transportation Officials (AASHTO). 2015. *LRFD Specifications for Structural Supports for Highway Signs, Luminaires, and Traffic Signals First Edition*. Publication Code LRFDLTS-1. ISBN 978-1-5605-628-6. Washington, DC.

Central Florida Expressway Authority (CFX). 2019. *Final Technical Memo SR 414 (Maitland Blvd.) Reversible Express Lanes Schematic*. Prepared by Dewberry. July.

Central Florida Expressway Authority (CFX). 2020. *CFX Aesthetic Guide SR 414 Extension* DRAFT. December 2020.

Central Florida Expressway Authority (CFX). 2021. *Design Guidelines*. March.

Central Florida Expressway Authority (CFX). 2022a. *Preliminary Engineering Report*. Prepared by Jacobs.

Central Florida Expressway Authority (CFX). 2022b. *Typical Section Technical Memorandum*. Prepared by Jacobs.

Florida Department of Transportation (FDOT). 2021. *2021 FDOT Design Manual*. Topic #625-000-002. January 1. https://www.fdot.gov/roadway/fdm/2020-fdot-design-manual

Florida Department of Transportation (FDOT). 2021. *Bridge Load Rating Manual, 2021*. Topic No. 850-010-035. January.

Florida Department of Transportation (FDOT). 2021. *Structures Design Guidelines*. Structures Manual Volume 1. Topic No. 625-020-018. January. https://fdotwww.blob.core.windows.net/sitefinity/docs/default-source/structures/structuresmanual/currentrelease/2021/vol1sdg.pdf

Geotechnical & Environmental Consultants, Inc. (GEC). 2020. *Preliminary Geotechnical Investigation for Bridge Development Report (BDR) SR 414 Expressway Extension PD&E Study SR 414 Bridge over Lake Bosse*. Prepared for Jacobs Engineering Group. December 30.

MetroPlan Orlando. 2020. *2045 Metropolitan Transportation Plan Cost Feasible Plan*. Adopted: 12/09/2020. December 9.

Appendix A
Bridge Concept Plans

Appendix A
Bridge Concept Plans

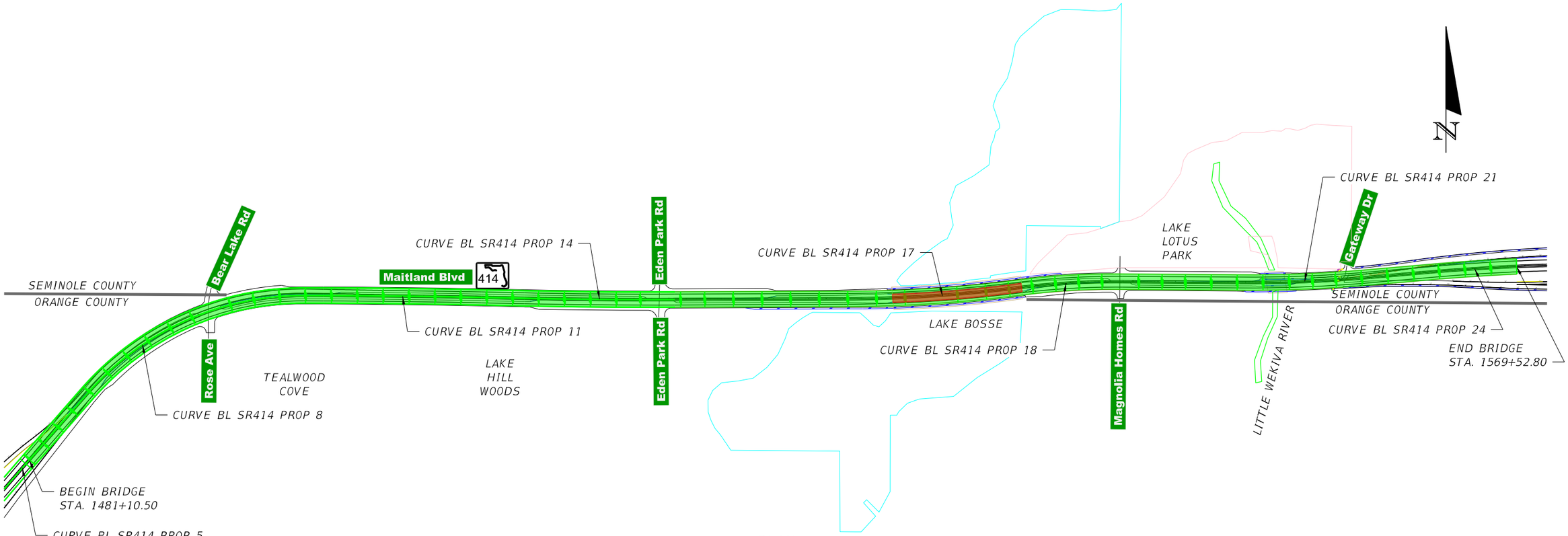

PLAN

NOTE: SEE ROADWAY CONCEPT PLANS FOR HORIZONTAL ALIGNMENT DATA.

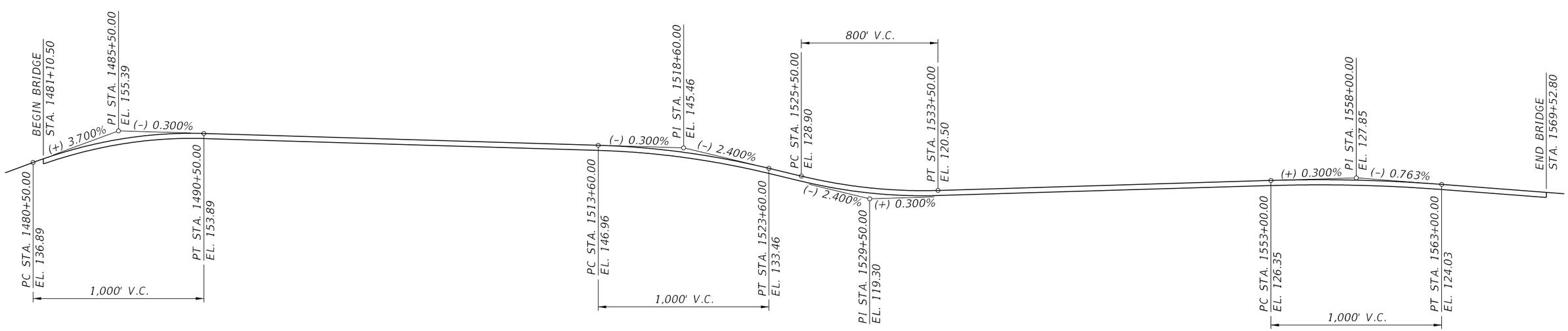

VERTICAL CURVE DATA

BRIDGE NO. XXXXXX

REVISIONS			
DATE	DESCRIPTION	DATE	DESCRIPTION

ENGINEER OF RECORD: BHUSHAN A. GODBOLE P.E.
P.E. LICENSE NO. 54325

JACOBS ENGINEERING GROUP INC.
200 W. FORSYTH STREET, SUITE 1520
JACKSONVILLE, FL 32202

SR 414 MAITLAND BLVD.
EXPRESSWAY EXTENSION
US 441 TO SR 434

ROAD NO.	PROJECT NO.
SR 414	414-227

CENTRAL FLORIDA EXPRESSWAY AUTHORITY

SHEET TITLE: BRIDGE OVERALL LAYOUT

REF. DWG. NO.

PROJECT NAME: S.R. 414 EXPRESSWAY EXTENSION OVER S.R. 414 (US 441 TO SR 434)

SHEET NO. B-1

egunders 8/5/2021 12:18:34 AM c:\pw_workdir\den003\ch2mhill_egunders\d0863543\KeySheet01.dgn

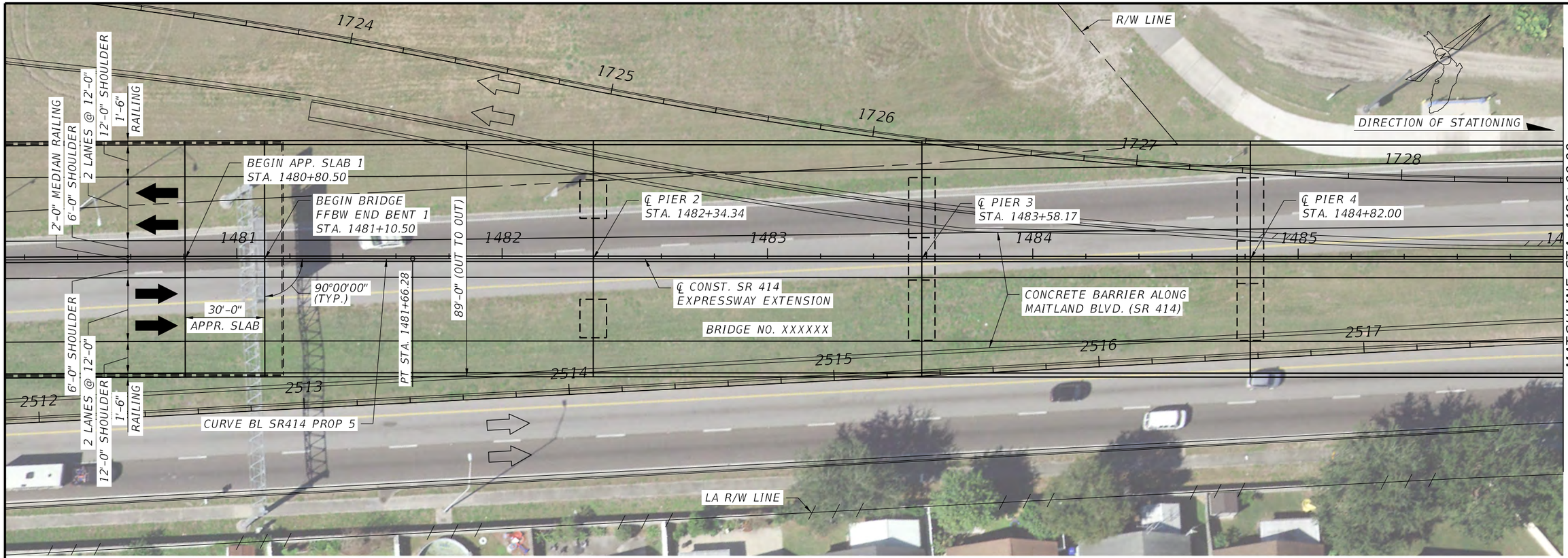

PLAN

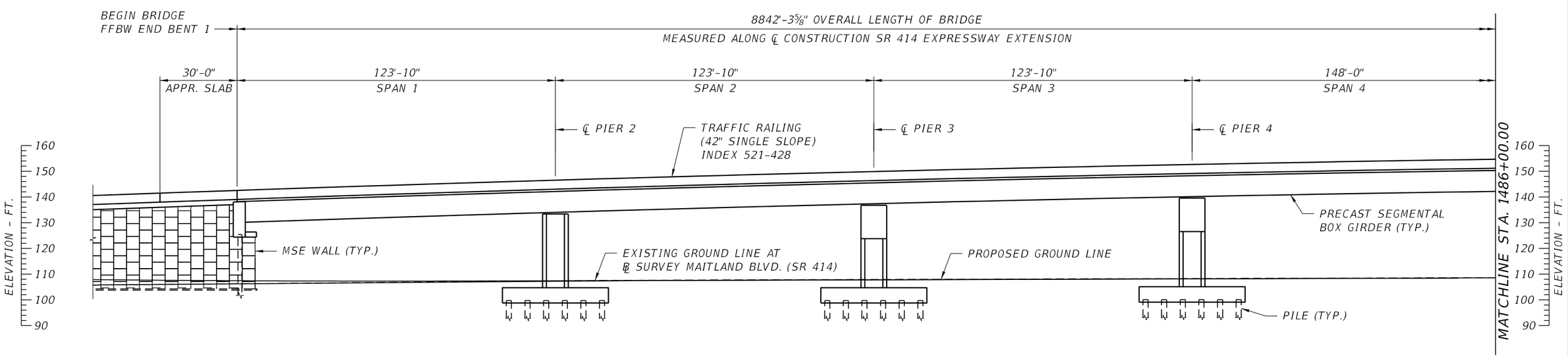

ELEVATION

BRIDGE NO. XXXXXX

REVISIONS			
DATE	DESCRIPTION	DATE	DESCRIPTION

ENGINEER OF RECORD: BHUSHAN A. GODBOLE P.E.
P.E. LICENSE NO. 54325

JACOBS ENGINEERING GROUP INC.
200 W. FORSYTH STREET, SUITE 1520
JACKSONVILLE, FL 32202

SR 414 MAITLAND BLVD.
EXPRESSWAY EXTENSION
US 441 TO SR 434

ROAD NO.	PROJECT NO.
SR 414	414-227

CENTRAL FLORIDA EXPRESSWAY AUTHORITY

SHEET TITLE: PLAN AND ELEVATION (1 OF 19)

REF. DWG. NO.

PROJECT NAME: S.R. 414 EXPRESSWAY EXTENSION
OVER S.R. 414 (US 441 TO SR 434)

SHEET NO. B1-1

egunders 8/4/2021 11:37:42 PM c:\pw_workdir\den003\ch2mhill_egunders\d0863543\B1PlanElev02.dgn

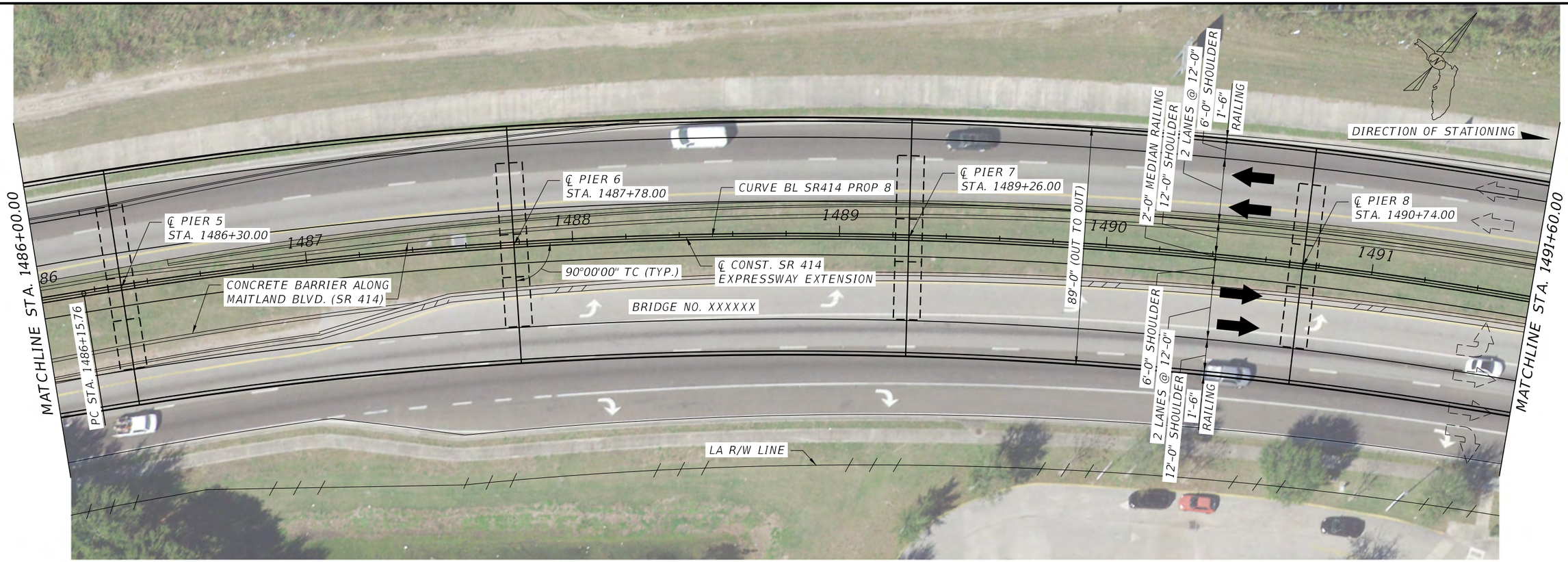

PLAN

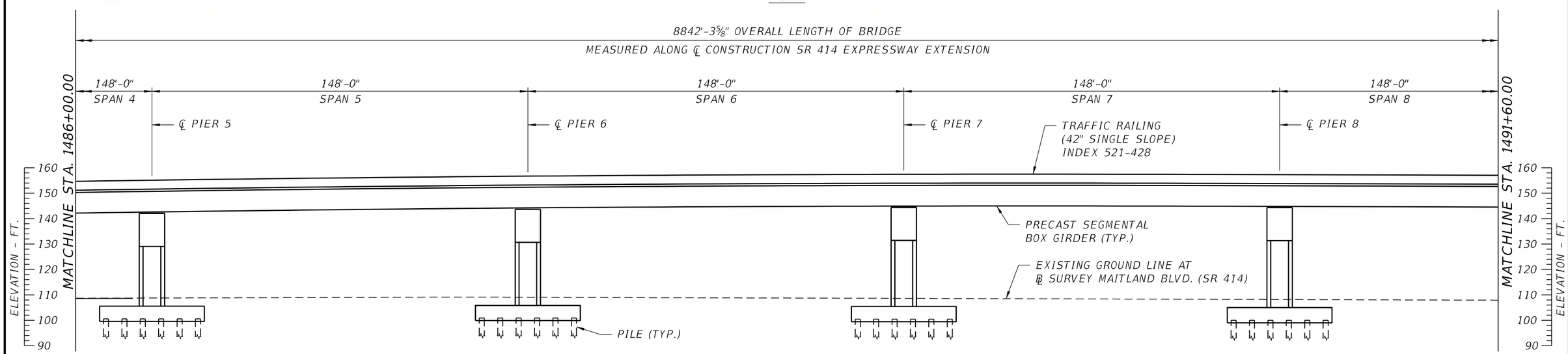

ELEVATION

BRIDGE NO. XXXXXX

REVISIONS			
DATE	DESCRIPTION	DATE	DESCRIPTION

ENGINEER OF RECORD: BHUSHAN A. GODBOLE P.E.
P.E. LICENSE NO. 54325

JACOBS ENGINEERING GROUP INC.
200 W. FORSYTH STREET, SUITE 1520
JACKSONVILLE, FL 32202

SR 414 MAITLAND BLVD.
EXPRESSWAY EXTENSION
US 441 TO SR 434

ROAD NO.	PROJECT NO.
SR 414	414-227

CENTRAL FLORIDA EXPRESSWAY AUTHORITY

SHEET TITLE: PLAN AND ELEVATION (2 OF 19)

REF. DWG. NO.

PROJECT NAME: S.R. 414 EXPRESSWAY EXTENSION
OVER S.R. 414 (US 441 TO SR 434)

SHEET NO. B1-2

egunders 8/4/2021 11:40:29 PM c:\pw_workdir\den003\ch2mhill_egunders\d0863543\B1PlanElev02.dgn

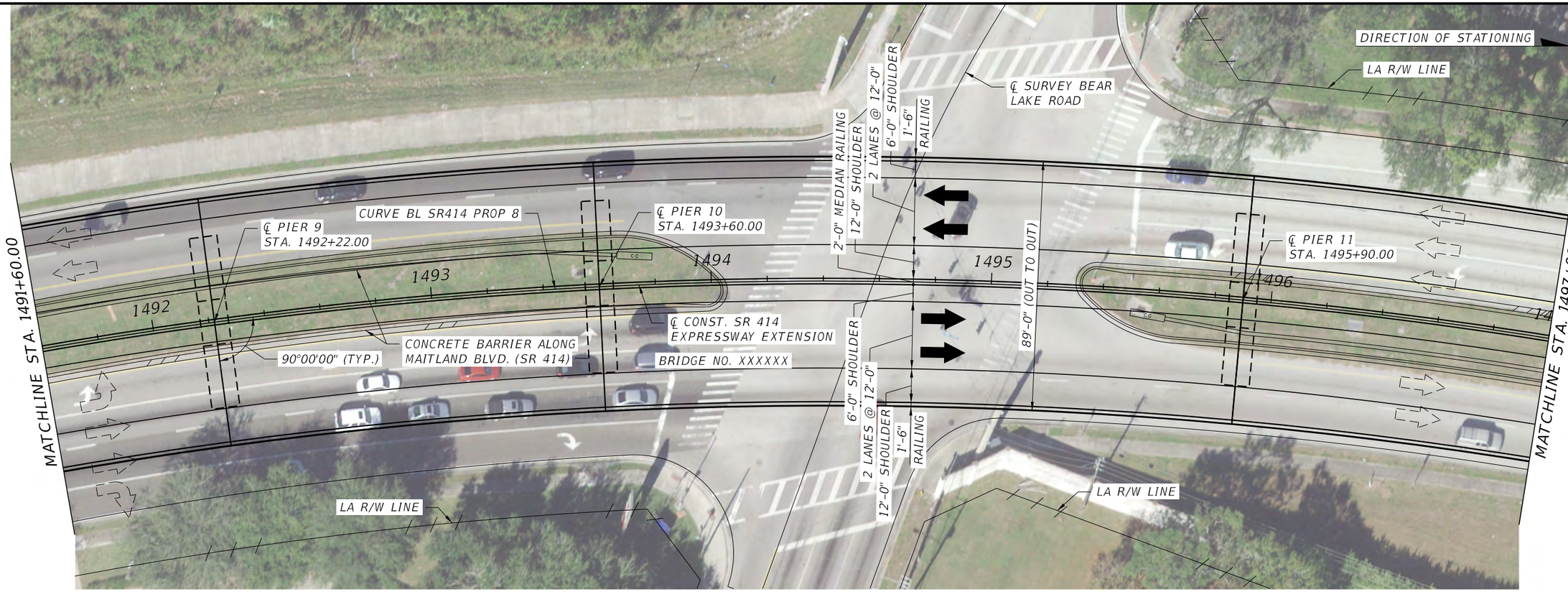

PLAN

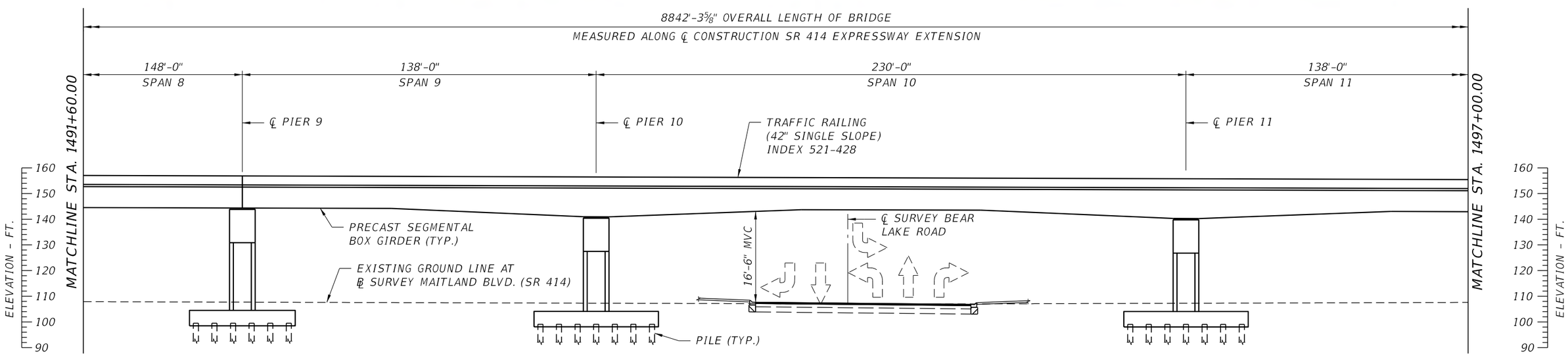

ELEVATION

BRIDGE NO. XXXXXX

REVISIONS			
DATE	DESCRIPTION	DATE	DESCRIPTION

ENGINEER OF RECORD: BHUSHAN A. GODBOLE P.E.
P.E. LICENSE NO. 54325

JACOBS ENGINEERING GROUP INC.
200 W. FORSYTH STREET, SUITE 1520
JACKSONVILLE, FL 32202

SR 414 MAITLAND BLVD.
EXPRESSWAY EXTENSION
US 441 TO SR 434

ROAD NO.	PROJECT NO.
SR 414	414-227

CENTRAL FLORIDA EXPRESSWAY AUTHORITY

SHEET TITLE: PLAN AND ELEVATION (3 OF 19)

REF. DWG. NO.

PROJECT NAME: S.R. 414 EXPRESSWAY EXTENSION OVER S.R. 414 (US 441 TO SR 434)

SHEET NO. B1-3

egunders 8/4/2021 11:43:38 PM c:\pw_workdir\den003\ch2mhill_egunders\d0863543\B1PlanElev02.dgn

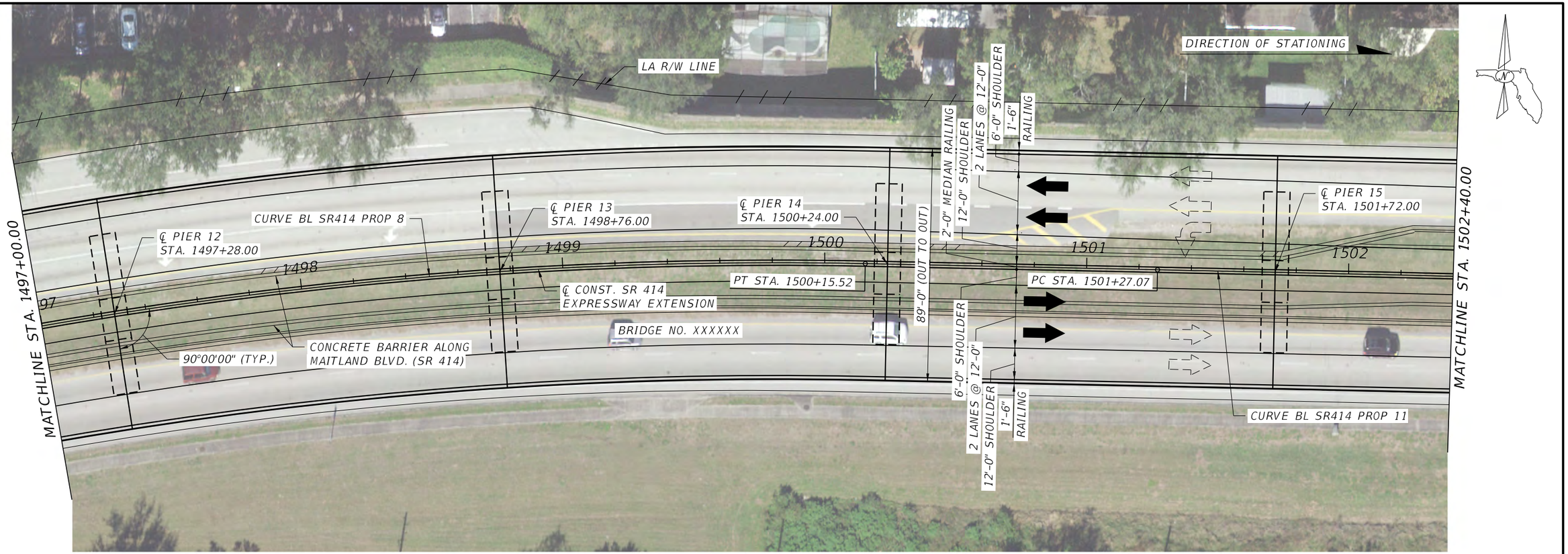

PLAN

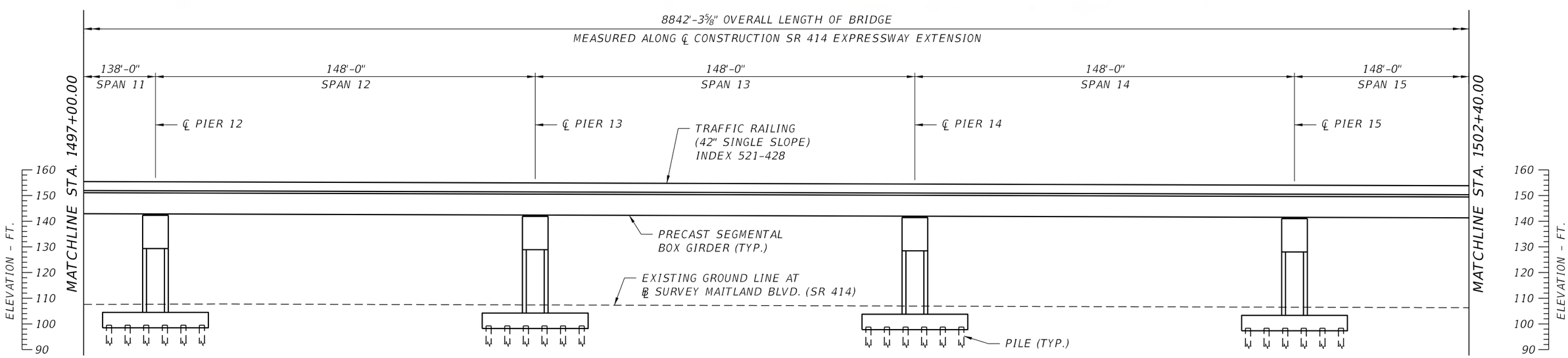

ELEVATION

BRIDGE NO. XXXXXX

REVISIONS			
DATE	DESCRIPTION	DATE	DESCRIPTION

ENGINEER OF RECORD: BHUSHAN A. GODBOLE P.E.
P.E. LICENSE NO. 54325

JACOBS ENGINEERING GROUP INC.
200 W. FORSYTH STREET, SUITE 1520
JACKSONVILLE, FL 32202

SR 414 MAITLAND BLVD.
EXPRESSWAY EXTENSION
US 441 TO SR 434

ROAD NO.	PROJECT NO.
SR 414	414-227

CENTRAL FLORIDA EXPRESSWAY AUTHORITY

SHEET TITLE: PLAN AND ELEVATION (4 OF 19)

REF. DWG. NO.

PROJECT NAME: S.R. 414 EXPRESSWAY EXTENSION
OVER S.R. 414 (US 441 TO SR 434)

SHEET NO. B1-4

egunders 8/4/2021 11:58:11 PM c:\pw_workdir\den003\ch2mhill_egunders\d0863543\B1PlanElev02.dgn

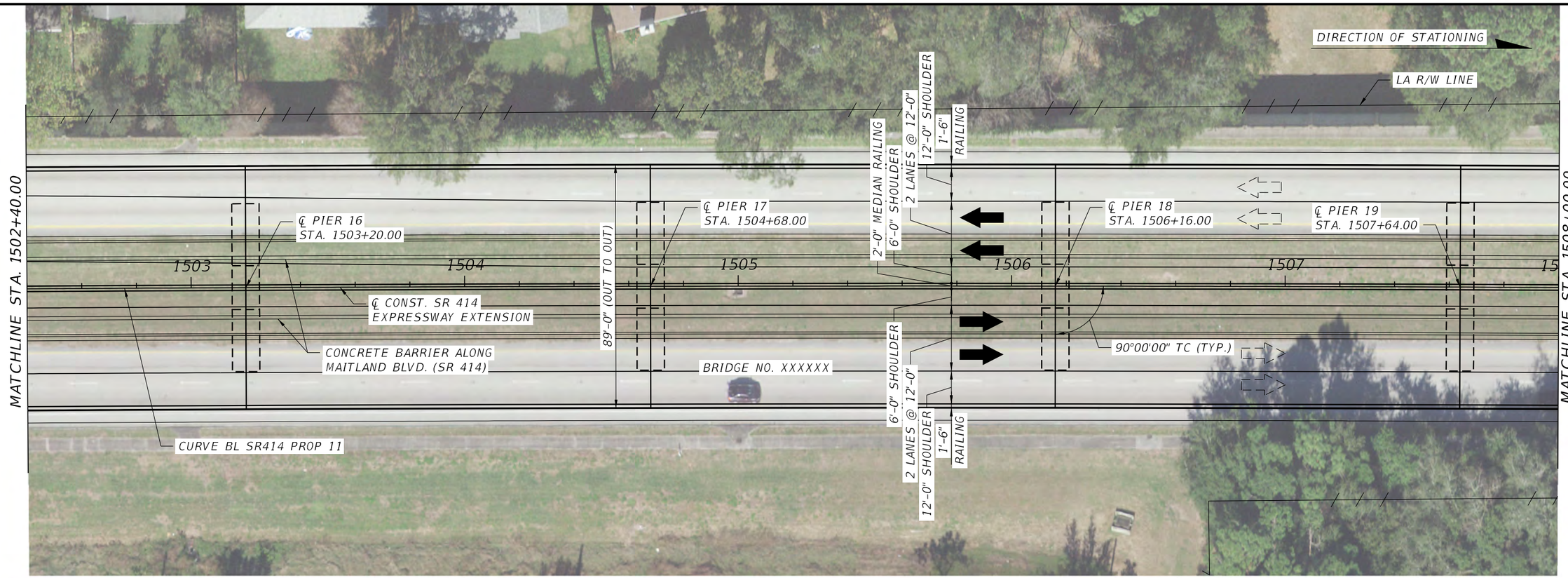

PLAN

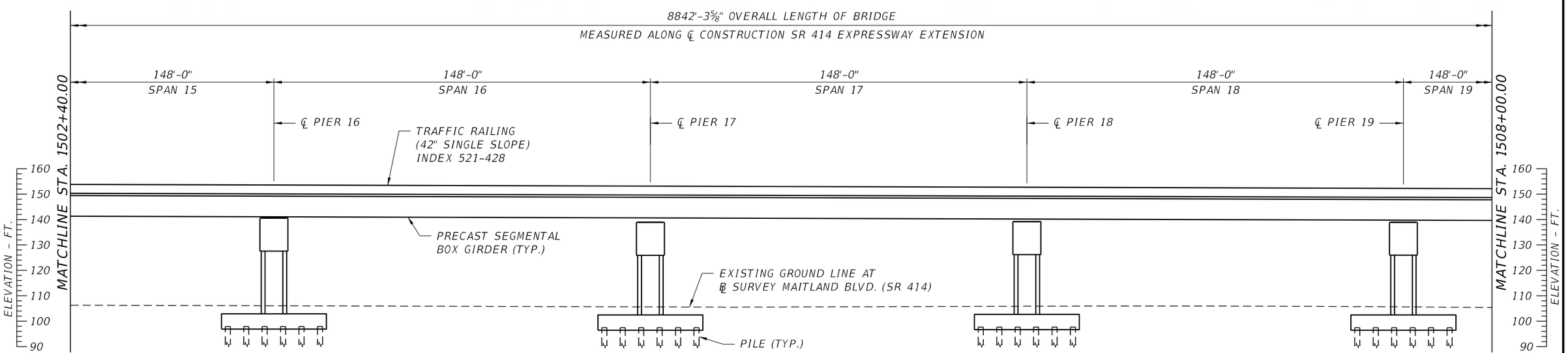

ELEVATION

BRIDGE NO. XXXXXX

REVISIONS			
DATE	DESCRIPTION	DATE	DESCRIPTION

ENGINEER OF RECORD: BHUSHAN A. GODBOLE P.E.
P.E. LICENSE NO. 54325

JACOBS ENGINEERING GROUP INC.
200 W. FORSYTH STREET, SUITE 1520
JACKSONVILLE, FL 32202

SR 414 MAITLAND BLVD.
EXPRESSWAY EXTENSION
US 441 TO SR 434

ROAD NO.	PROJECT NO.
SR 414	414-227

CENTRAL FLORIDA EXPRESSWAY AUTHORITY

SHEET TITLE: PLAN AND ELEVATION (5 OF 19)

REF. DWG. NO.

PROJECT NAME: S.R. 414 EXPRESSWAY EXTENSION
OVER S.R. 414 (US 441 TO SR 434)

SHEET NO. B1-5

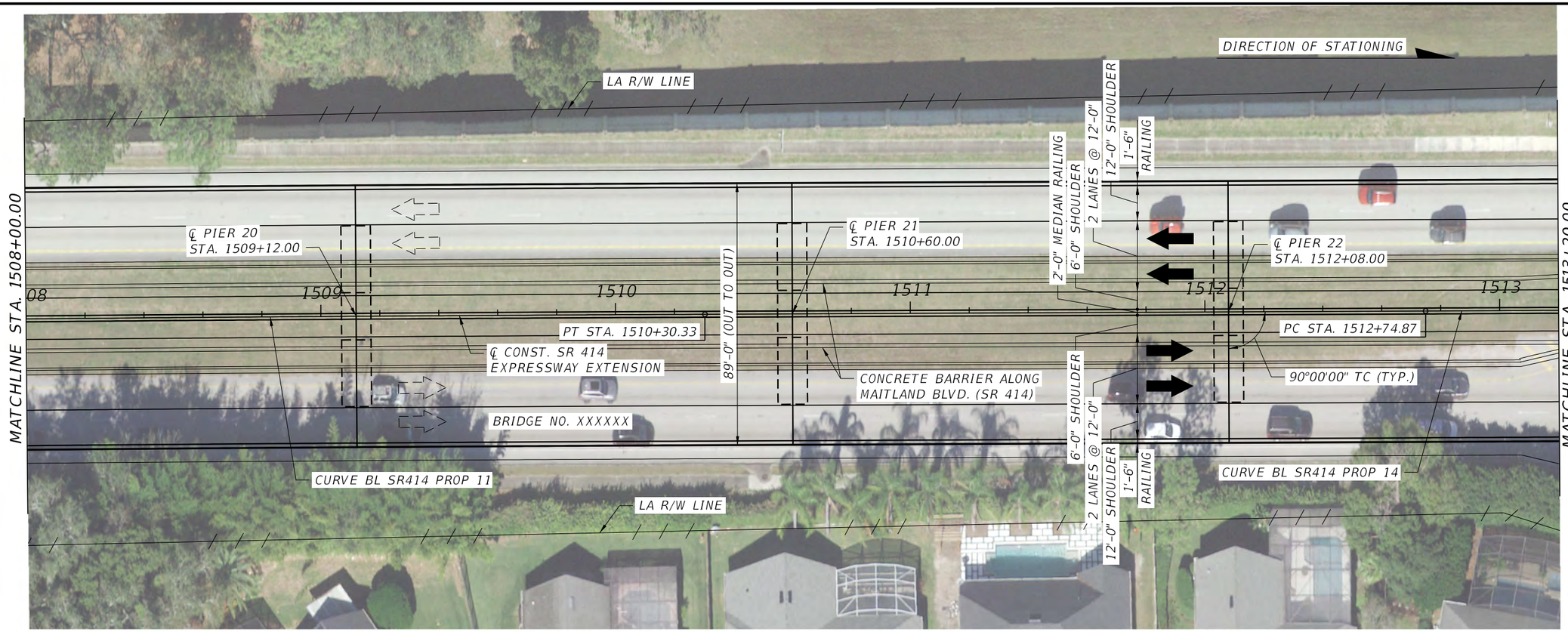

PLAN

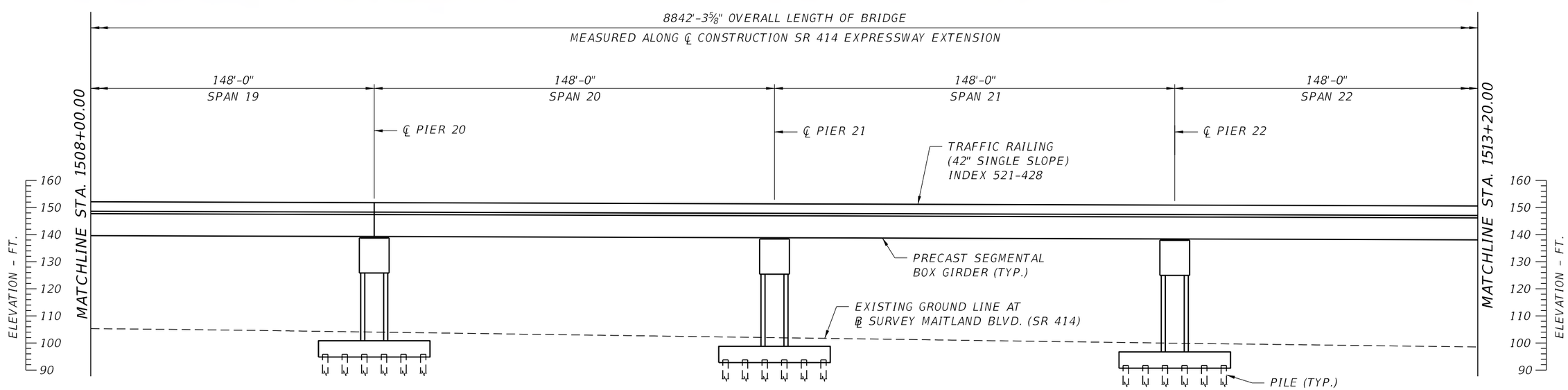

ELEVATION

BRIDGE NO. XXXXXX

REVISIONS			
DATE	DESCRIPTION	DATE	DESCRIPTION

ENGINEER OF RECORD: BHUSHAN A. GODBOLE P.E.
P.E. LICENSE NO. 54325

JACOBS ENGINEERING GROUP INC.
200 W. FORSYTH STREET, SUITE 1520
JACKSONVILLE, FL 32202

SR 414 MAITLAND BLVD.
EXPRESSWAY EXTENSION
US 441 TO SR 434

ROAD NO.	PROJECT NO.
SR 414	414-227

CENTRAL FLORIDA EXPRESSWAY AUTHORITY

SHEET TITLE: PLAN AND ELEVATION (6 OF 19)

PROJECT NAME: S.R. 414 EXPRESSWAY EXTENSION OVER S.R. 414 (US 441 TO SR 434)

REF. DWG. NO.

SHEET NO. B1-6

egunders 8/5/2021 12:01:45 AM c:\pw_workdir\den003\ch2mhill_egunders\d0863543\B1PlanElev02.dgn

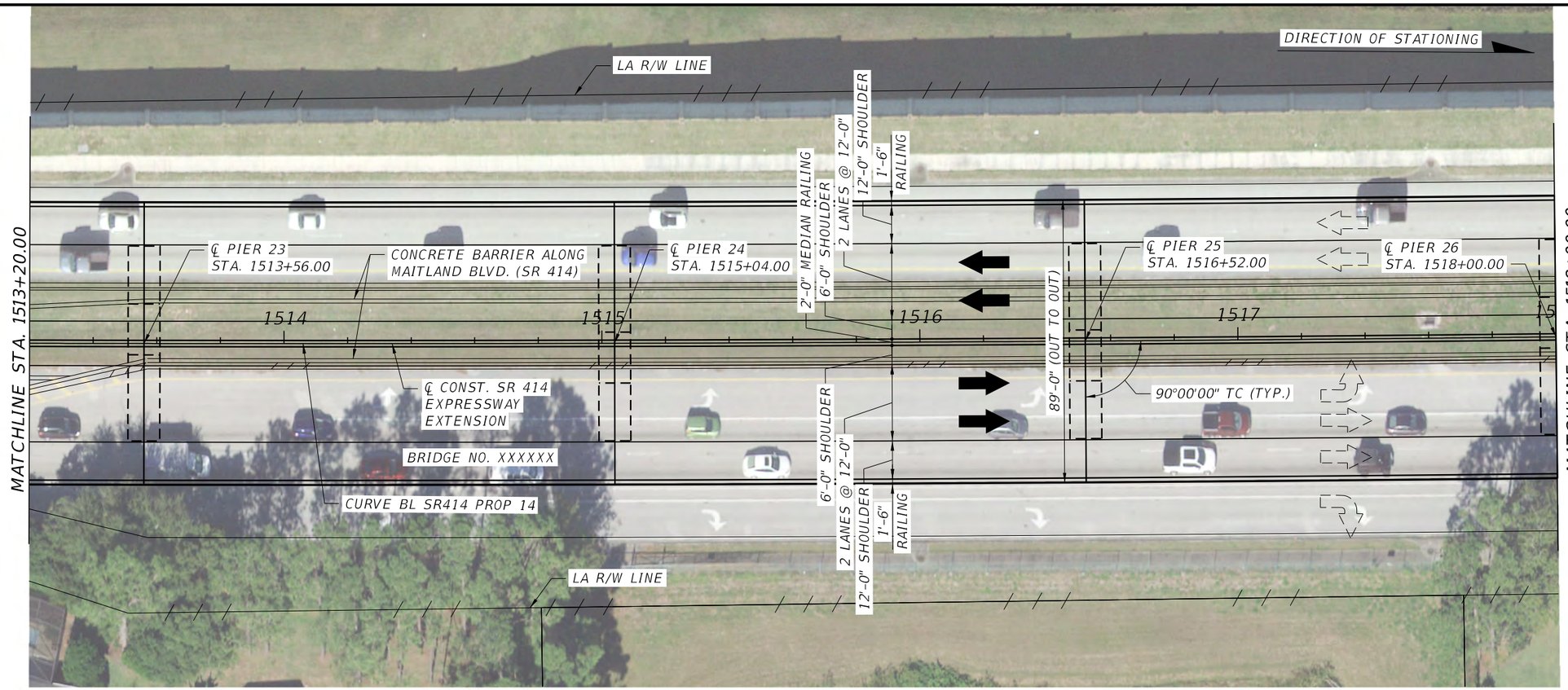

PLAN

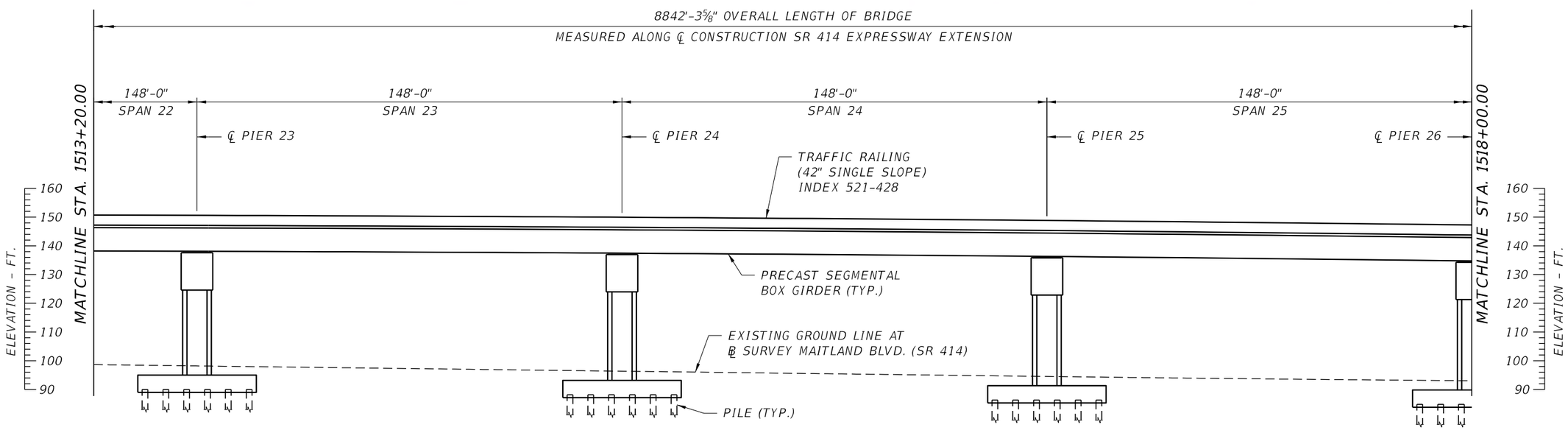

ELEVATION

BRIDGE NO. XXXXXX

REVISIONS			
DATE	DESCRIPTION	DATE	DESCRIPTION

ENGINEER OF RECORD: BHUSHAN A. GODBOLE P.E.
P.E. LICENSE NO. 54325

JACOBS ENGINEERING GROUP INC.
200 W. FORSYTH STREET, SUITE 1520
JACKSONVILLE, FL 32202

SR 414 MAITLAND BLVD.
EXPRESSWAY EXTENSION
US 441 TO SR 434

ROAD NO.	PROJECT NO.
SR 414	414-227

CENTRAL FLORIDA EXPRESSWAY AUTHORITY

SHEET TITLE: PLAN AND ELEVATION (7 OF 19)

REF. DWG. NO.

PROJECT NAME: S.R. 414 EXPRESSWAY EXTENSION
OVER S.R. 414 (US 441 TO SR 434)

SHEET NO. B1-7

egunders 8/5/2021 12:10:29 AM c:\pw_workdir\den003\ch2mhill_egunders\d0863543\B1PlanElev02.dgn

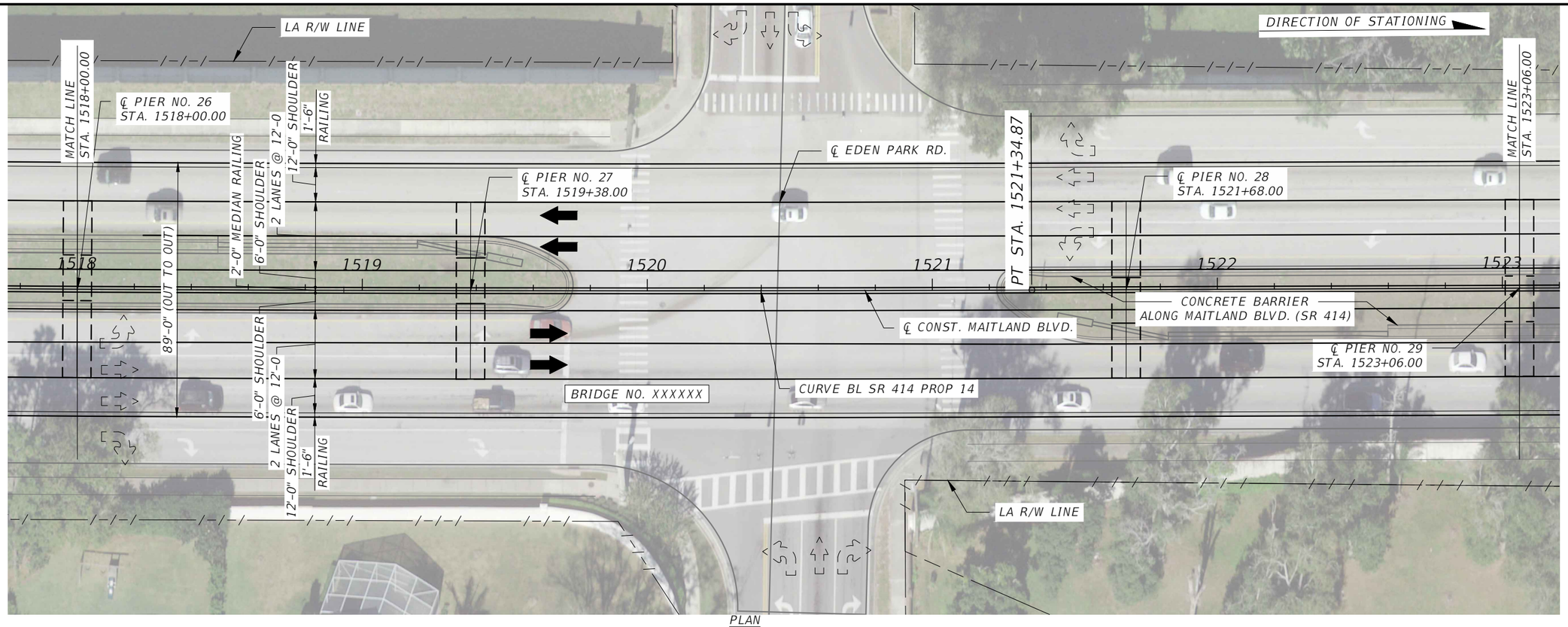

PLAN

8842'-3⅝" OVERALL LENGTH OF BRIDGE
MEASURED ALONG ℄ CONSTRUCTION SR 414 EXPRESSWAY EXTENSION

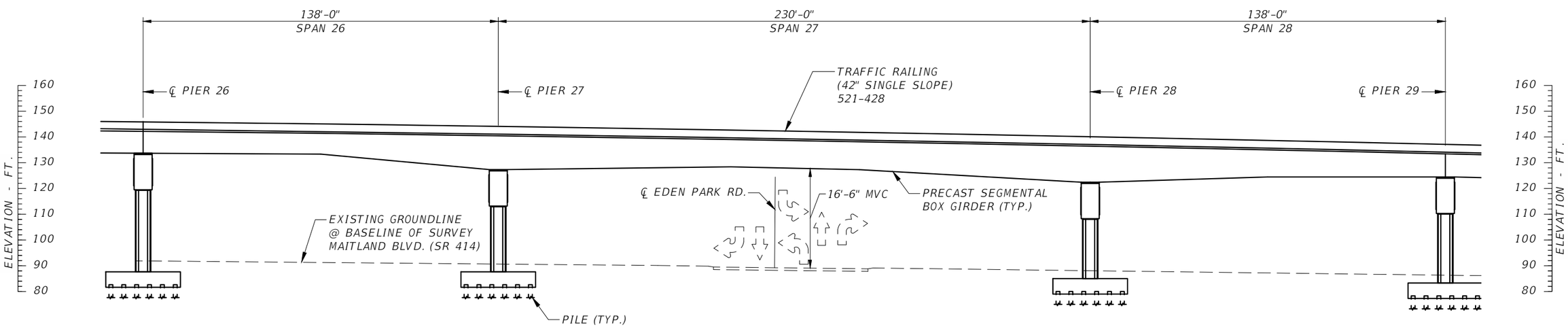

ELEVATION

BRIDGE NO. XXXXXX

REVISIONS			
DATE	DESCRIPTION	DATE	DESCRIPTION

RAM KOZHIKOTE
P.E. LICENSE NUMBER 44022
BASE CONSULTANTS
1214 EAST CONCORD STREET
ORLANDO, FL 32803

SR 414 MAITLAND BLVD.
EXPRESSWAY EXTENSION
US 441 TO SR 434

ROAD NO.	PROJECT NO.
SR 414	414-227

CENTRAL FLORIDA EXPRESSWAY AUTHORITY

SHEET TITLE: PLAN AND ELEVATION (8 OF 19)

REF. DWG. NO.

PROJECT NAME: S.R. 414 EXPRESSWAY EXTENSION OVER S.R. 414 (US 441 TO SR 434)

SHEET NO. B1-8

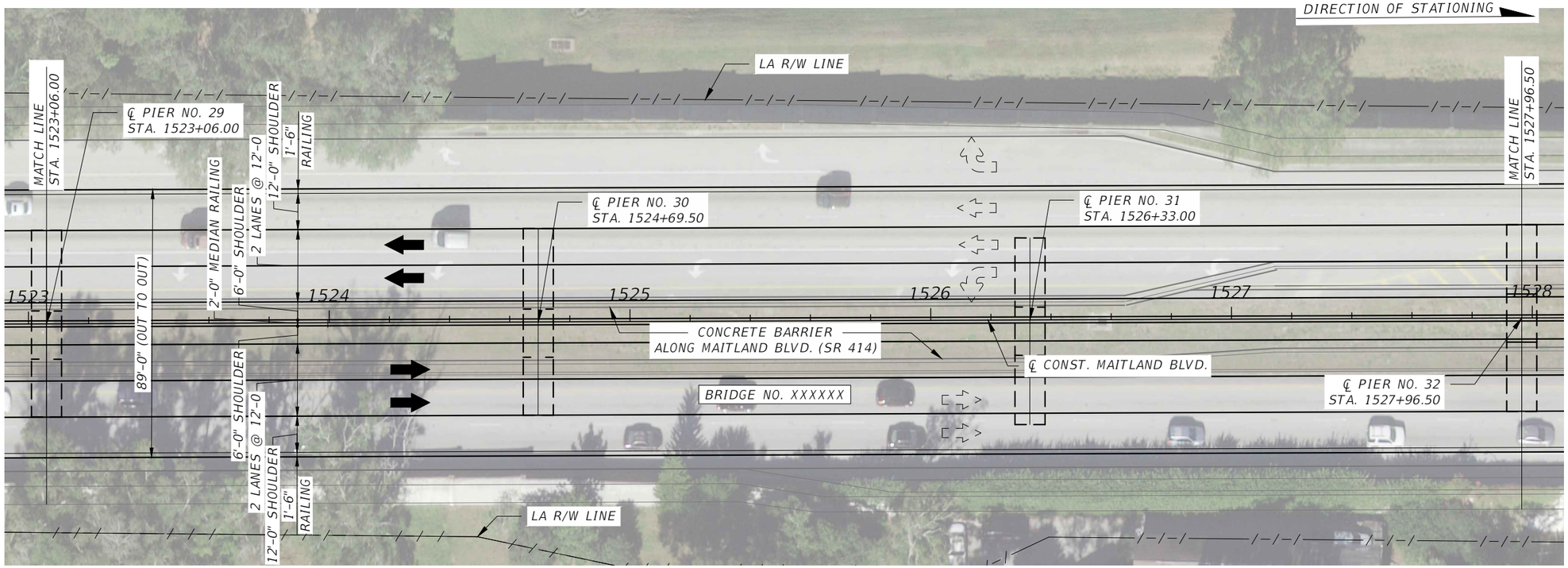

PLAN

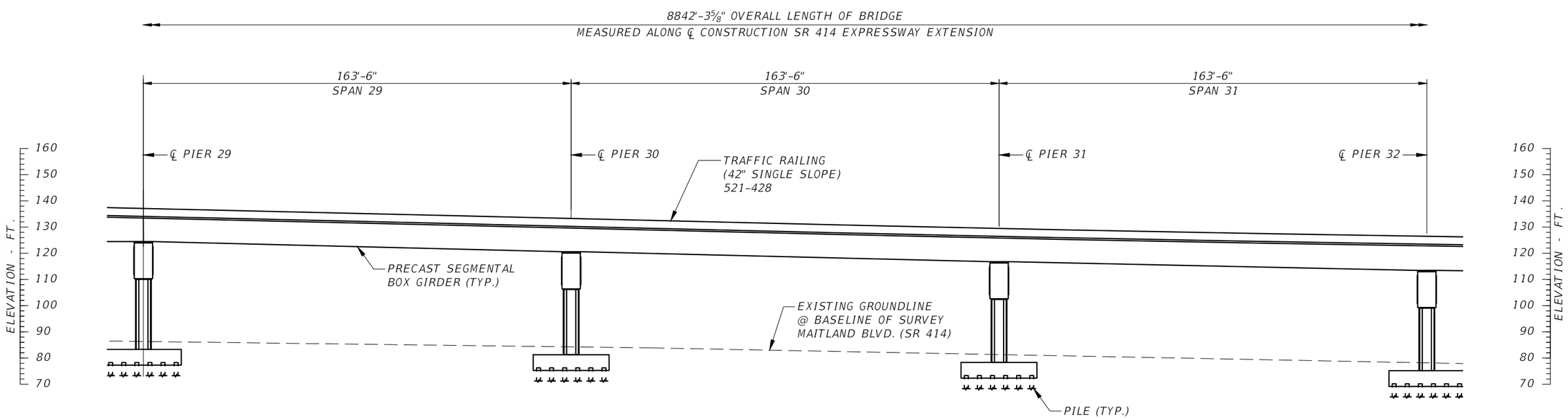

ELEVATION

BRIDGE NO. XXXXXX

REVISIONS			
DATE	DESCRIPTION	DATE	DESCRIPTION

RAM KOZHIKOTE
P.E. LICENSE NUMBER 44022
BASE CONSULTANTS
1214 EAST CONCORD STREET
ORLANDO, FL 32803

SR 414 MAITLAND BLVD.
EXPRESSWAY EXTENSION
US 441 TO SR 434

ROAD NO.	PROJECT NO.
SR 414	414-227

CENTRAL FLORIDA EXPRESSWAY AUTHORITY

SHEET TITLE: PLAN AND ELEVATION (9 OF 19)

PROJECT NAME: S.R. 414 EXPRESSWAY EXTENSION OVER S.R. 414 (US 441 TO SR 434)

REF. DWG. NO.

SHEET NO. B1-9

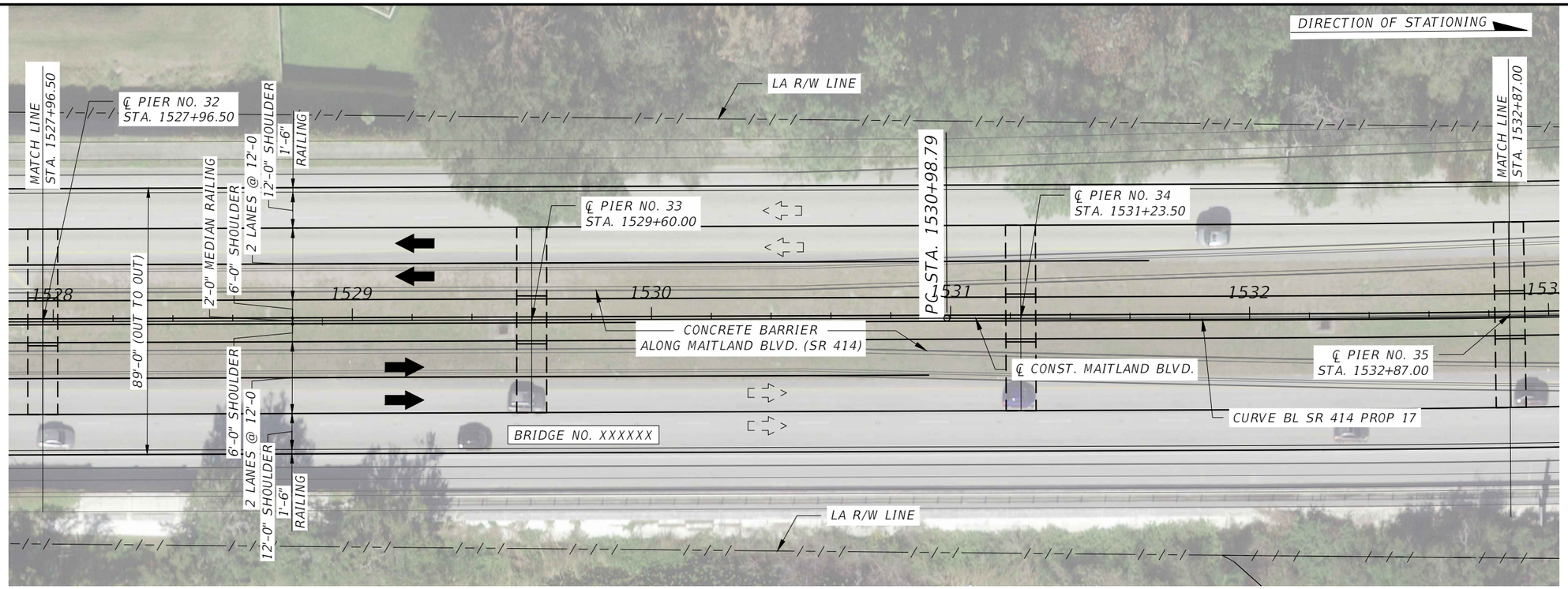

PLAN

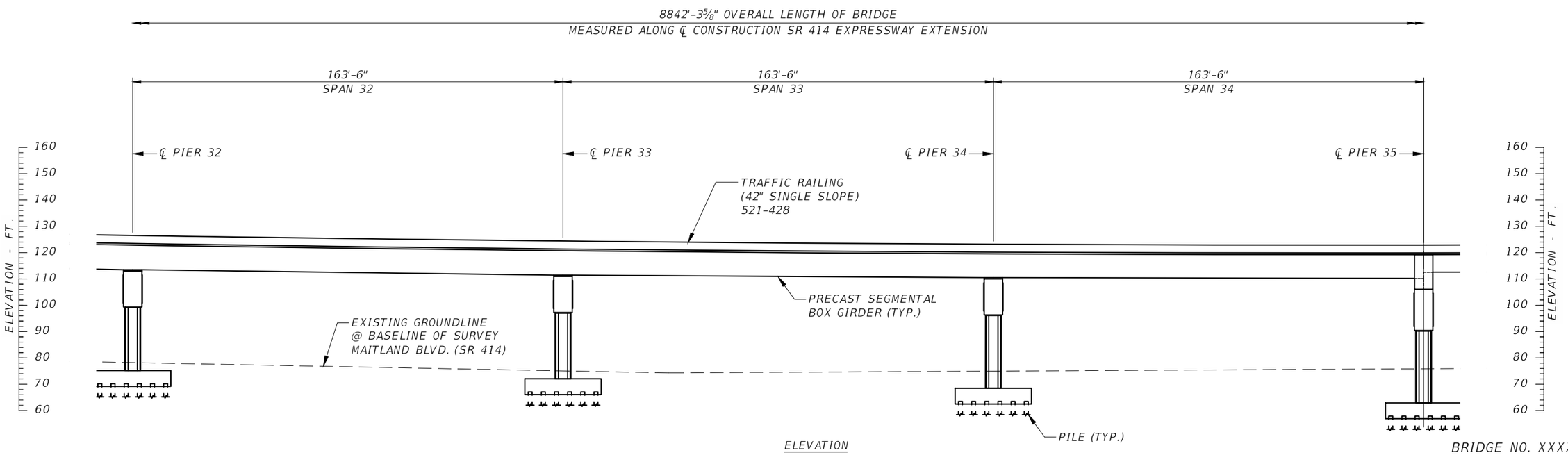

ELEVATION

BRIDGE NO. XXXXXX

REVISIONS			
DATE	DESCRIPTION	DATE	DESCRIPTION

RAM KOZHIKOTE
P.E. LICENSE NUMBER 44022
BASE CONSULTANTS
1214 EAST CONCORD STREET
ORLANDO, FL 32803

SR 414 MAITLAND BLVD.
EXPRESSWAY EXTENSION
US 441 TO SR 434

ROAD NO.	PROJECT NO.
SR 414	414-227

CENTRAL FLORIDA EXPRESSWAY AUTHORITY

SHEET TITLE: PLAN AND ELEVATION (10 OF 19)

REF. DWG. NO.

PROJECT NAME: S.R. 414 EXPRESSWAY EXTENSION OVER S.R. 414 (US 441 TO SR 434)

SHEET NO. B1-10

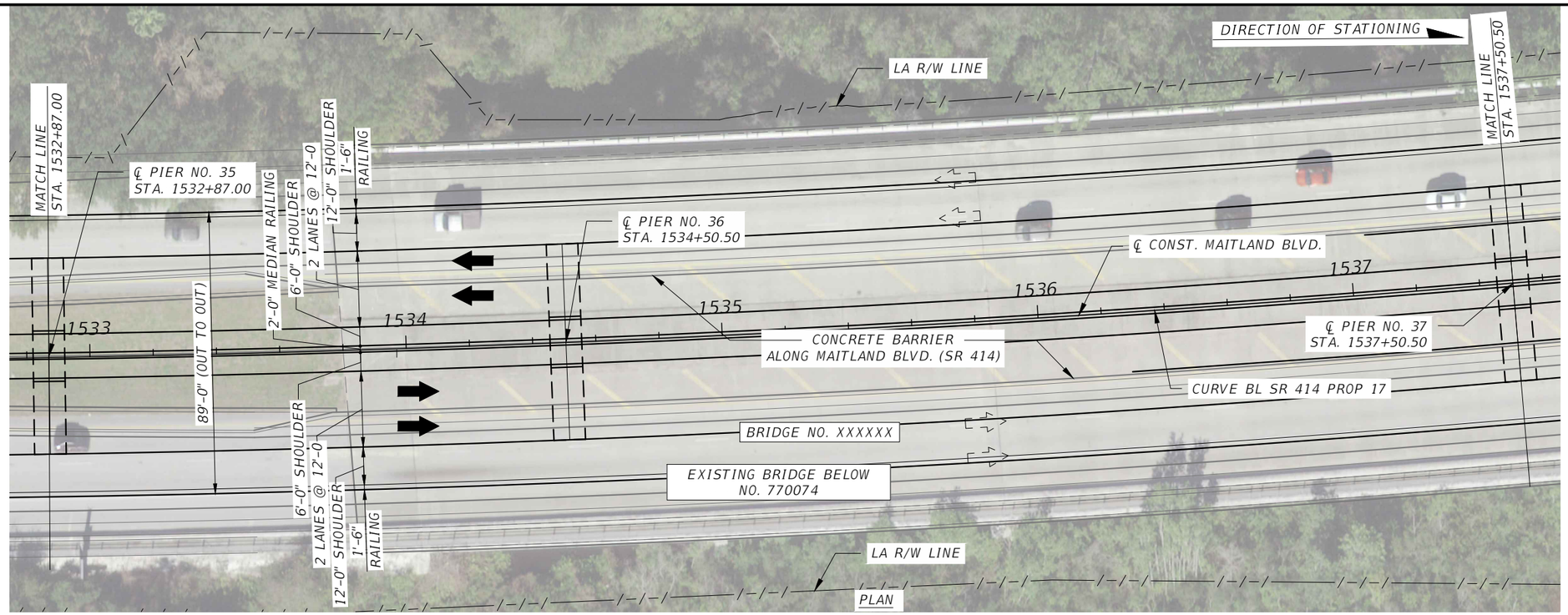

PLAN

8842'-3⅝" OVERALL LENGTH OF BRIDGE
MEASURED ALONG ℄ CONSTRUCTION SR 414 EXPRESSWAY EXTENSION

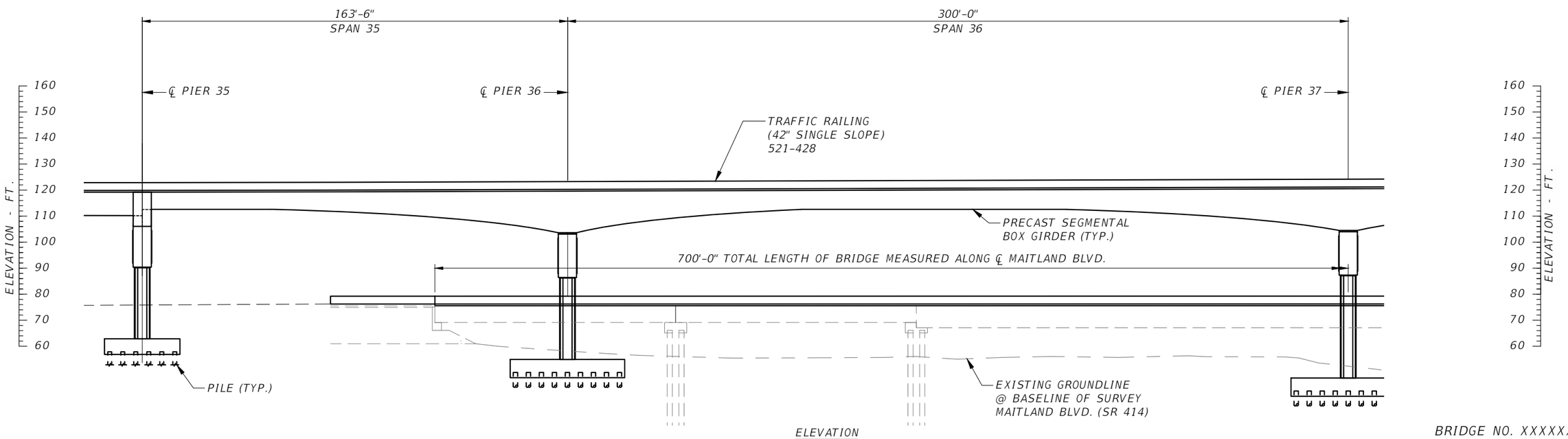

ELEVATION

BRIDGE NO. XXXXXX

REVISIONS			
DATE	DESCRIPTION	DATE	DESCRIPTION

RAM KOZHIKOTE
P.E. LICENSE NUMBER 44022
BASE CONSULTANTS
1214 EAST CONCORD STREET
ORLANDO, FL 32803

SR 414 MAITLAND BLVD.
EXPRESSWAY EXTENSION
US 441 TO SR 434

ROAD NO.	PROJECT NO.
SR 414	414-227

CENTRAL FLORIDA EXPRESSWAY AUTHORITY

SHEET TITLE: PLAN AND ELEVATION (11 OF 19)

PROJECT NAME: S.R. 414 EXPRESSWAY EXTENSION OVER S.R. 414 (US 441 TO SR 434)

REF. DWG. NO.

SHEET NO. B1-11

8/6/2021 9:44:28 PM P:\Projects-Transportation\Jacobs\CFX 414-227_SR 414 Expressway_Ext_PDE\CAD\Struct\B1-Viaduct SR 414 Express Way\B03PlanElev02.dwg

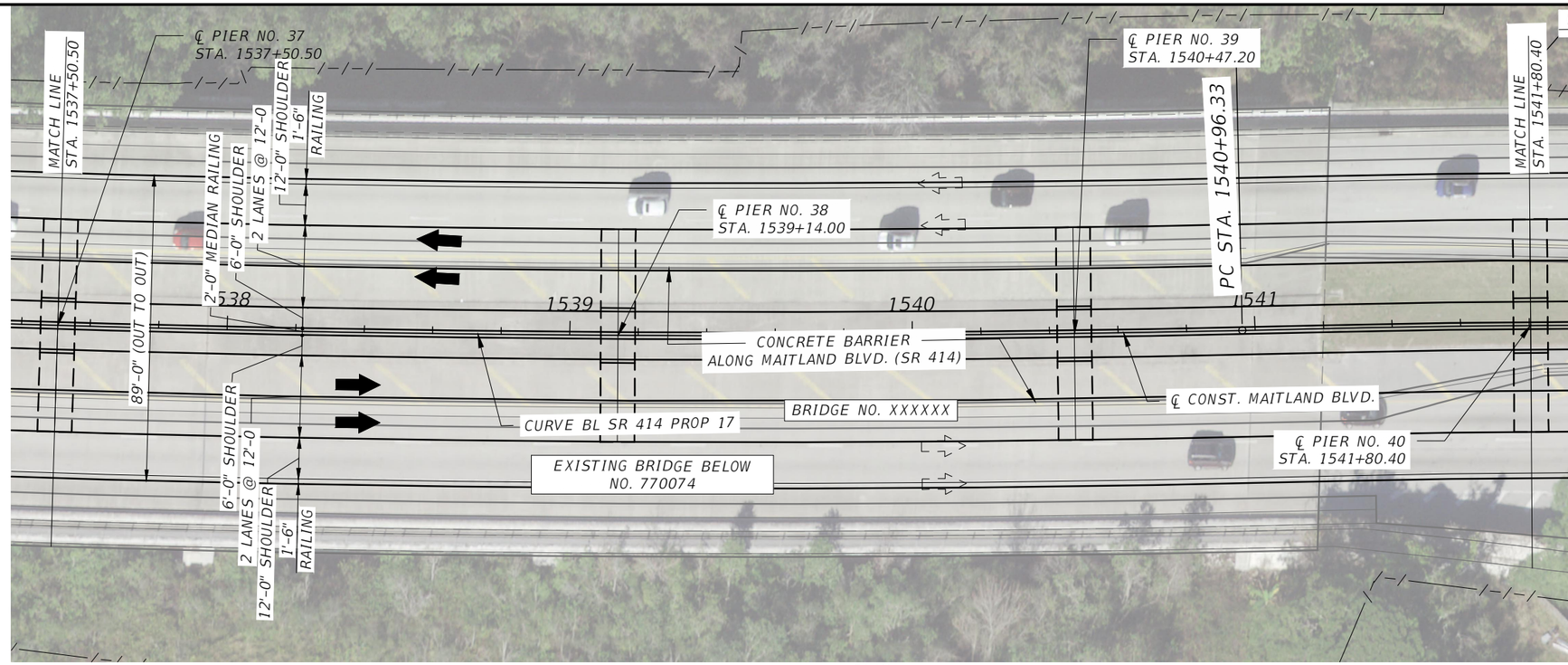

PLAN

8842'-3⅝" OVERALL LENGTH OF BRIDGE
MEASURED ALONG ℄ CONSTRUCTION SR 414 EXPRESSWAY EXTENSION

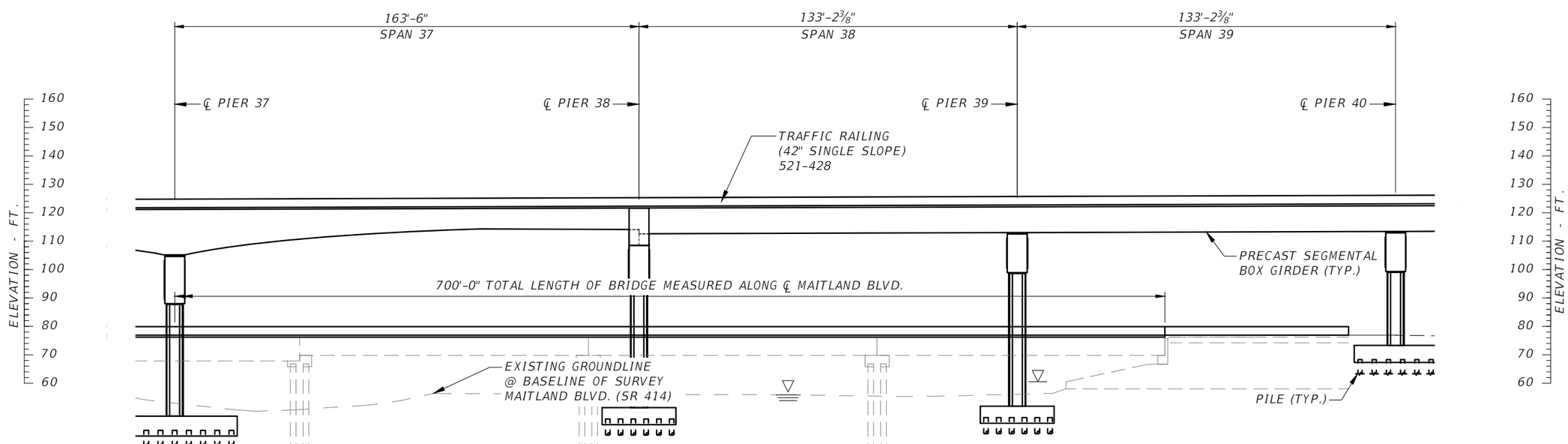

ELEVATION

BRIDGE NO. XXXXXX

REVISIONS			
DATE	DESCRIPTION	DATE	DESCRIPTION

RAM KOZHIKOTE
P.E. LICENSE NUMBER 44022
BASE CONSULTANTS
1214 EAST CONCORD STREET
ORLANDO, FL 32803

SR 414 MAITLAND BLVD.
EXPRESSWAY EXTENSION
US 441 TO SR 434

ROAD NO.	PROJECT NO.
SR 414	414-227

CENTRAL FLORIDA EXPRESSWAY AUTHORITY

SHEET TITLE: PLAN AND ELEVATION (12 OF 19)

REF. DWG. NO.

PROJECT NAME: S.R. 414 EXPRESSWAY EXTENSION
OVER S.R. 414 (US 441 TO SR 434)

SHEET NO. B1-12

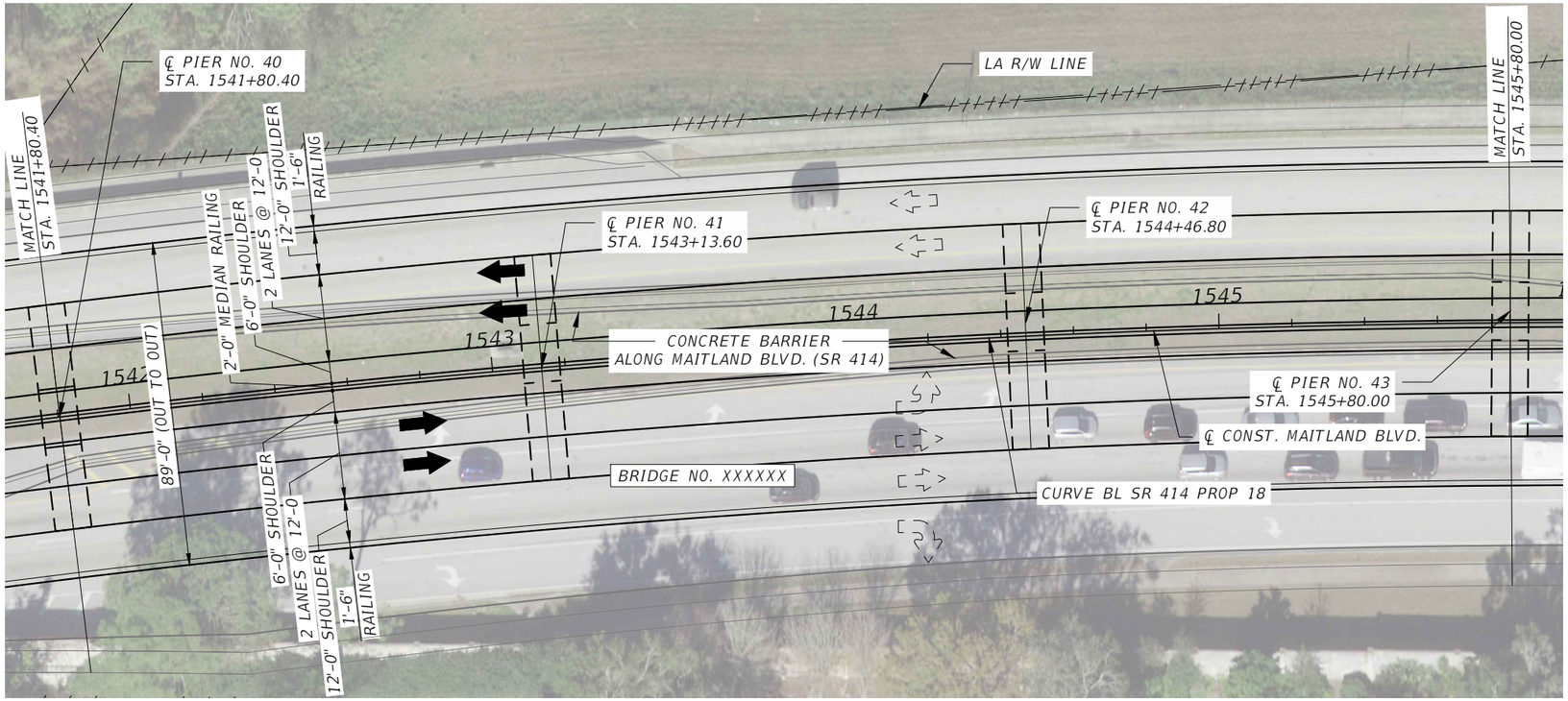

PLAN

8842'-3⅝" OVERALL LENGTH OF BRIDGE
MEASURED ALONG ℄ CONSTRUCTION SR 414 EXPRESSWAY EXTENSION

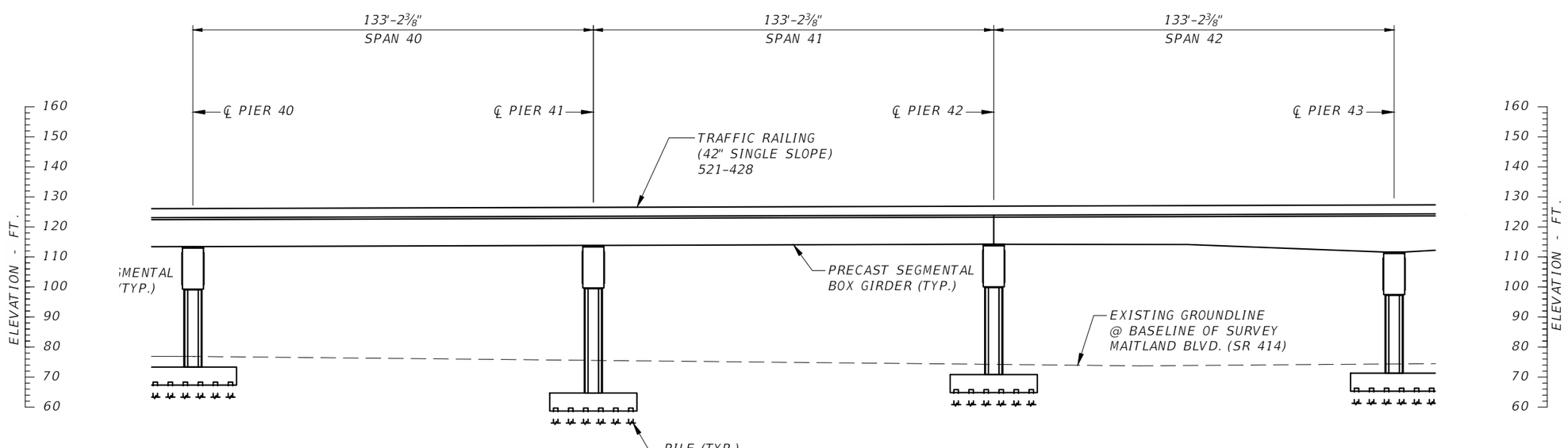

ELEVATION

BRIDGE NO. XXXXXX

REVISIONS			
DATE	DESCRIPTION	DATE	DESCRIPTION

RAM KOZHIKOTE
P.E. LICENSE NUMBER 44022
BASE CONSULTANTS
1214 EAST CONCORD STREET
ORLANDO, FL 32803

SR 414 MAITLAND BLVD.
EXPRESSWAY EXTENSION
US 441 TO SR 434

ROAD NO.	PROJECT NO.
SR 414	414-227

CENTRAL FLORIDA EXPRESSWAY AUTHORITY

SHEET TITLE: PLAN AND ELEVATION (13 OF 19)

PROJECT NAME: S.R. 414 EXPRESSWAY EXTENSION OVER S.R. 414 (US 441 TO SR 434)

REF. DWG. NO.

SHEET NO. B1-13

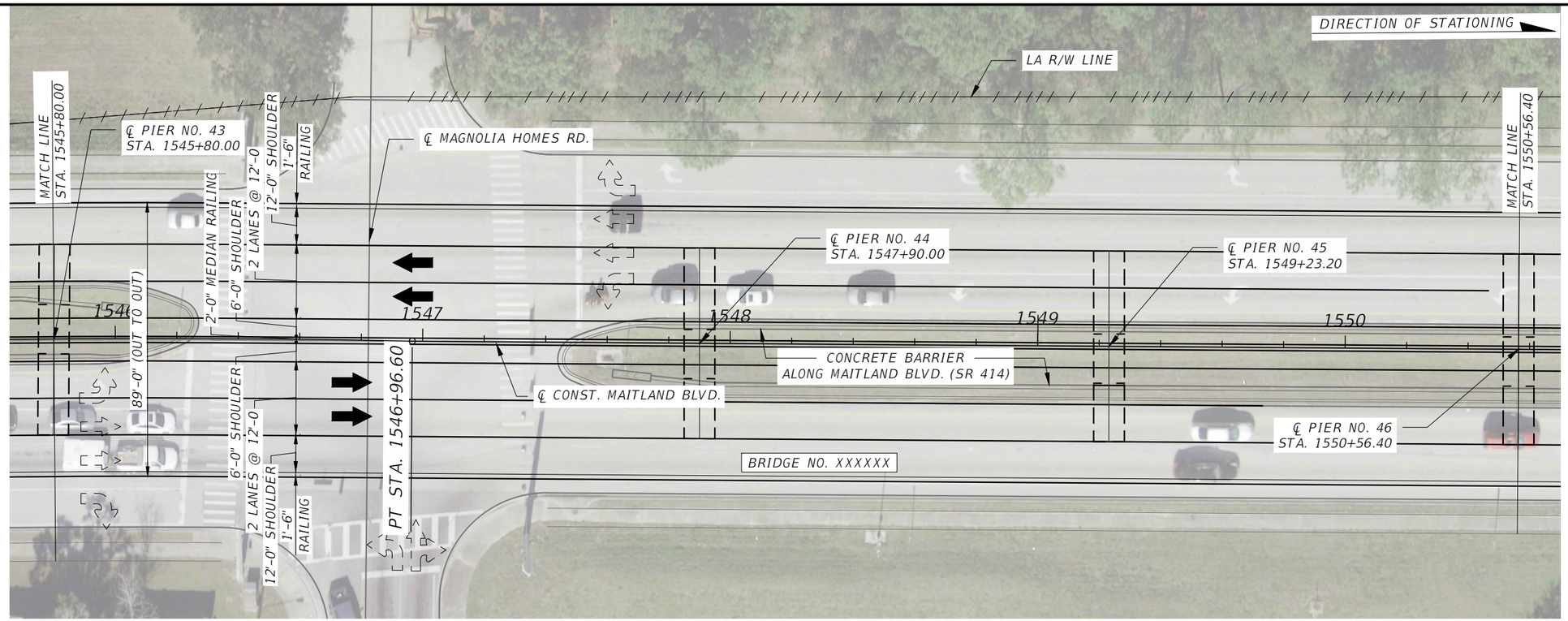

PLAN

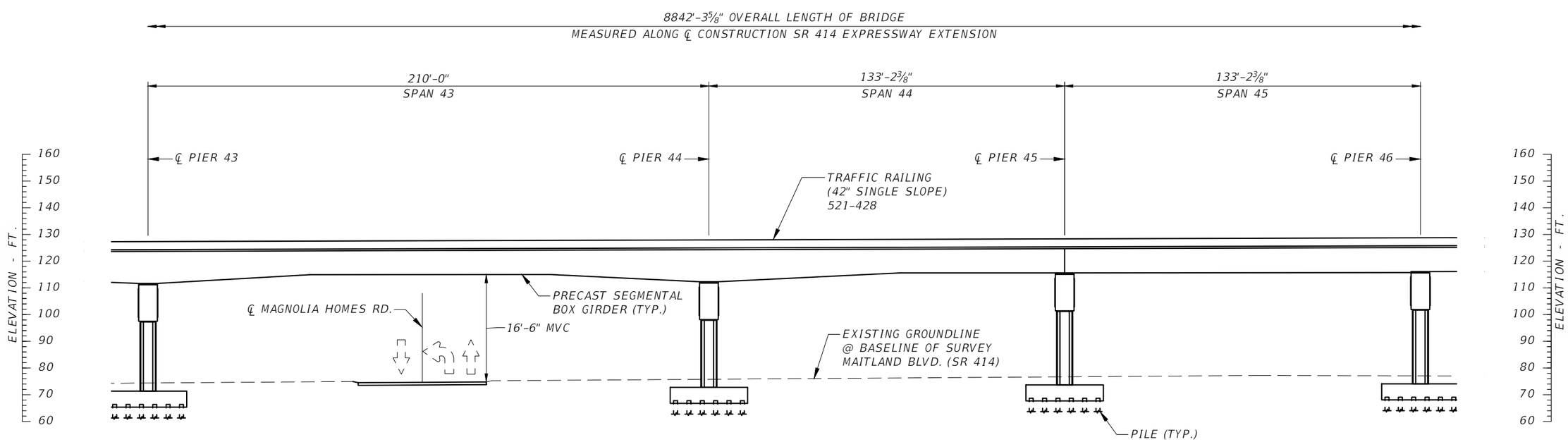

ELEVATION

BRIDGE NO. XXXXXX

REVISIONS			
DATE	DESCRIPTION	DATE	DESCRIPTION

RAM KOZHIKOTE
P.E. LICENSE NUMBER 44022
BASE CONSULTANTS
1214 EAST CONCORD STREET
ORLANDO, FL 32803

SR 414 MAITLAND BLVD.
EXPRESSWAY EXTENSION
US 441 TO SR 434

ROAD NO.	PROJECT NO.
SR 414	414-227

CENTRAL FLORIDA EXPRESSWAY AUTHORITY

SHEET TITLE: PLAN AND ELEVATION (14 OF 19)

REF. DWG. NO.

PROJECT NAME: S.R. 414 EXPRESSWAY EXTENSION OVER S.R. 414 (US 441 TO SR 434)

SHEET NO. B1-14

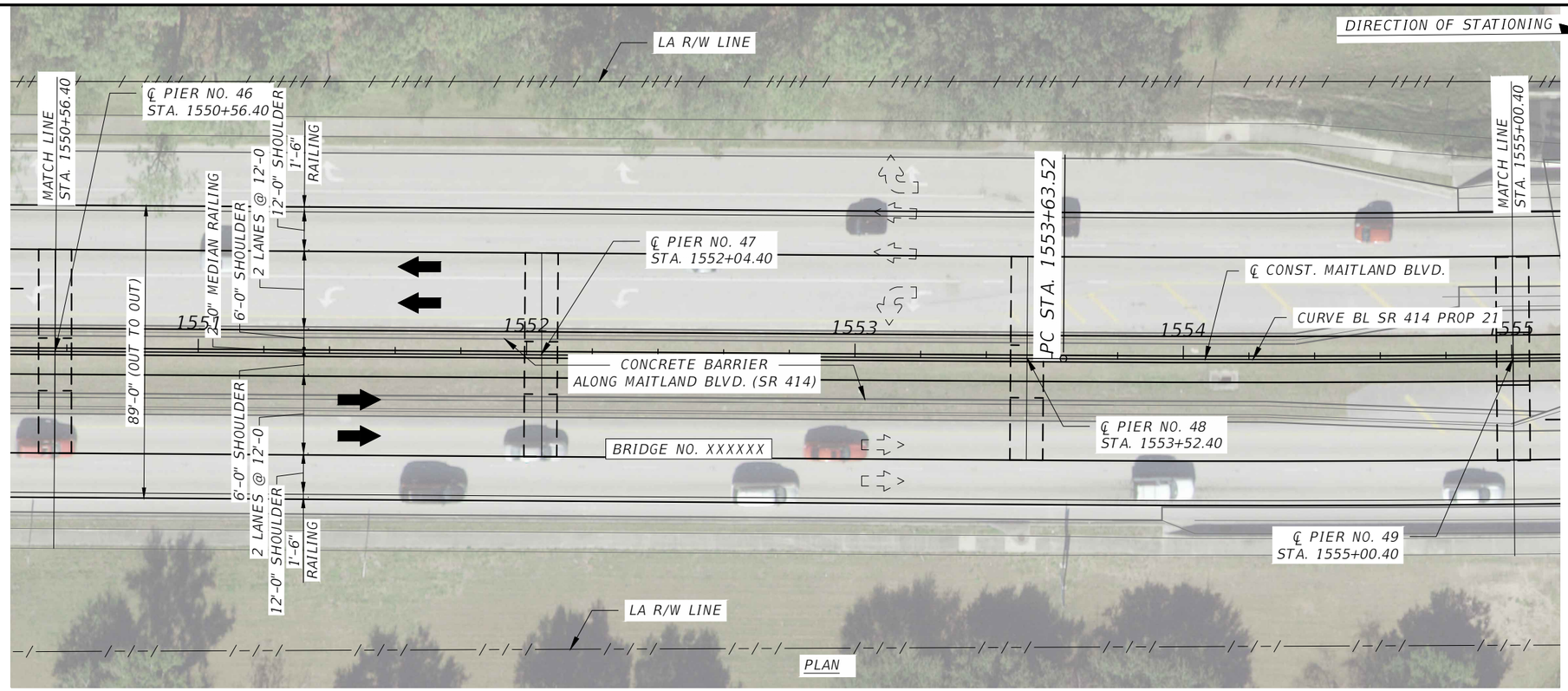

8842'-3⅝" OVERALL LENGTH OF BRIDGE
MEASURED ALONG ℄ CONSTRUCTION SR 414 EXPRESSWAY EXTENSION

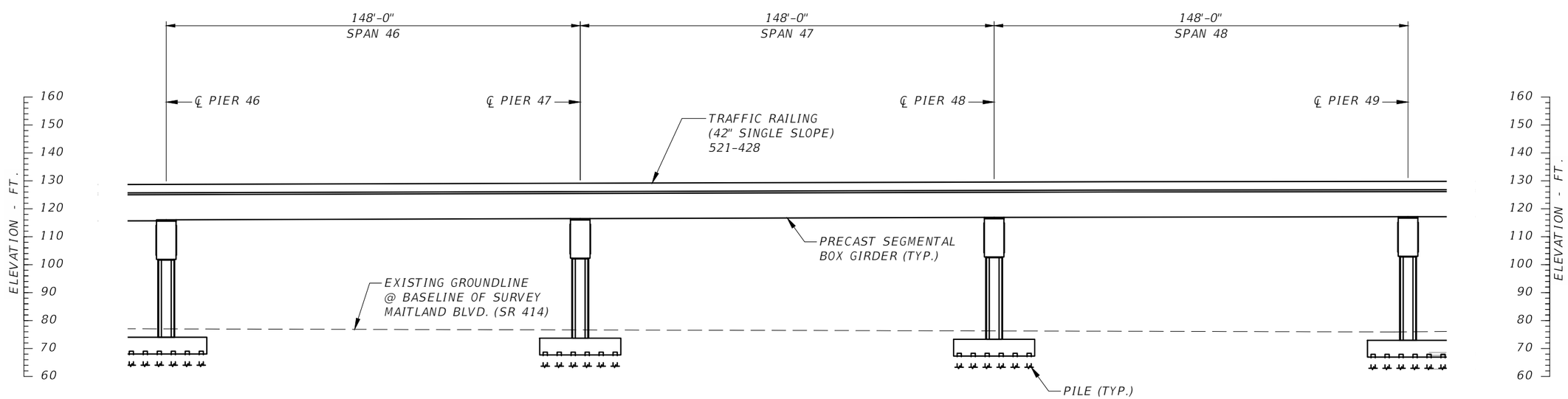

ELEVATION

BRIDGE NO. XXXXXX

REVISIONS			
DATE	DESCRIPTION	DATE	DESCRIPTION

RAM KOZHIKOTE
P.E. LICENSE NUMBER 44022
BASE CONSULTANTS
1214 EAST CONCORD STREET
ORLANDO, FL 32803

SR 414 MAITLAND BLVD.
EXPRESSWAY EXTENSION
US 441 TO SR 434

ROAD NO.	PROJECT NO.
SR 414	414-227

CENTRAL FLORIDA EXPRESSWAY AUTHORITY

SHEET TITLE: PLAN AND ELEVATION (15 OF 19)

REF. DWG. NO.

PROJECT NAME: S.R. 414 EXPRESSWAY EXTENSION OVER S.R. 414 (US 441 TO SR 434)

SHEET NO. B1-15

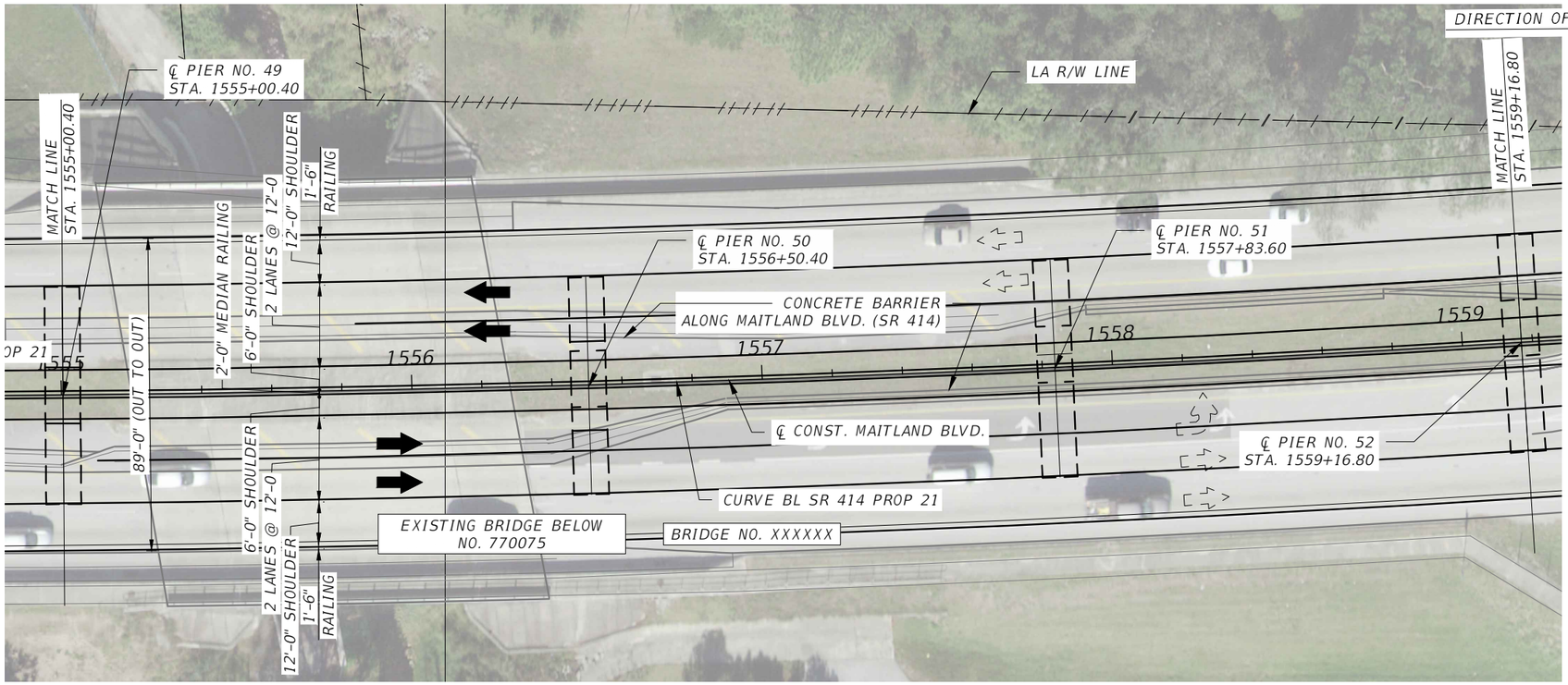

PLAN

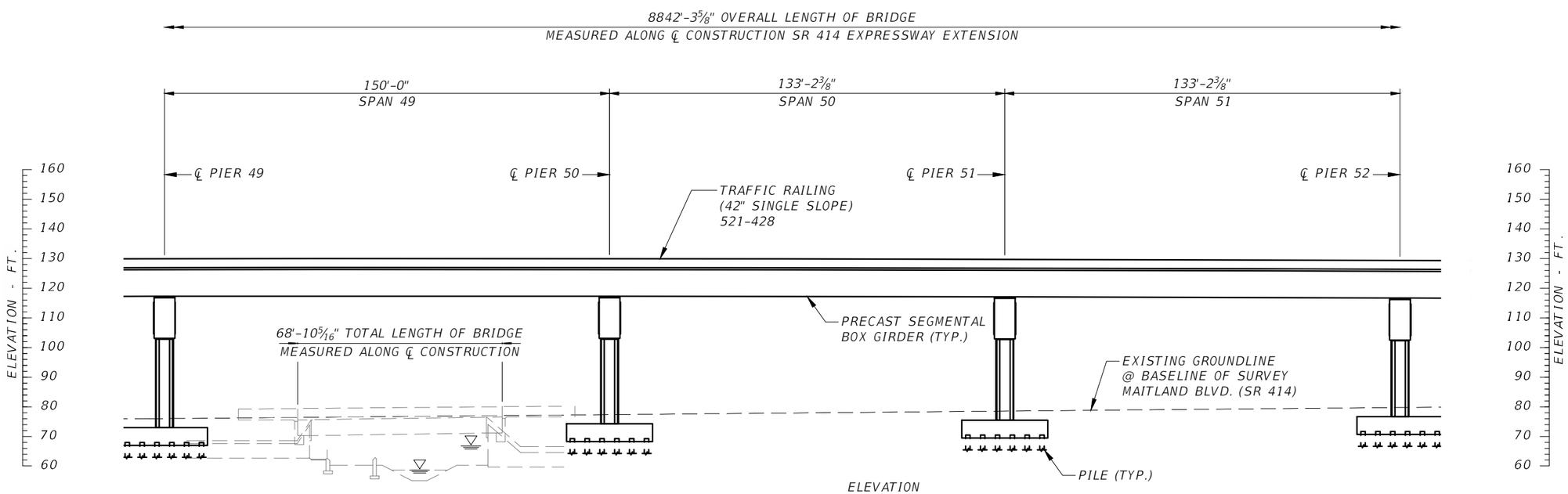

ELEVATION

BRIDGE NO. XXXXXX

REVISIONS			
DATE	DESCRIPTION	DATE	DESCRIPTION

RAM KOZHIKOTE
P.E. LICENSE NUMBER 44022
BASE CONSULTANTS
1214 EAST CONCORD STREET
ORLANDO, FL 32803

SR 414 MAITLAND BLVD.
EXPRESSWAY EXTENSION
US 441 TO SR 434

ROAD NO.	PROJECT NO.
SR 414	414-227

CENTRAL FLORIDA EXPRESSWAY AUTHORITY

SHEET TITLE: PLAN AND ELEVATION (16 OF 19)

PROJECT NAME: S.R. 414 EXPRESSWAY EXTENSION
OVER S.R. 414 (US 441 TO SR 434)

REF. DWG. NO.

SHEET NO. B1-16

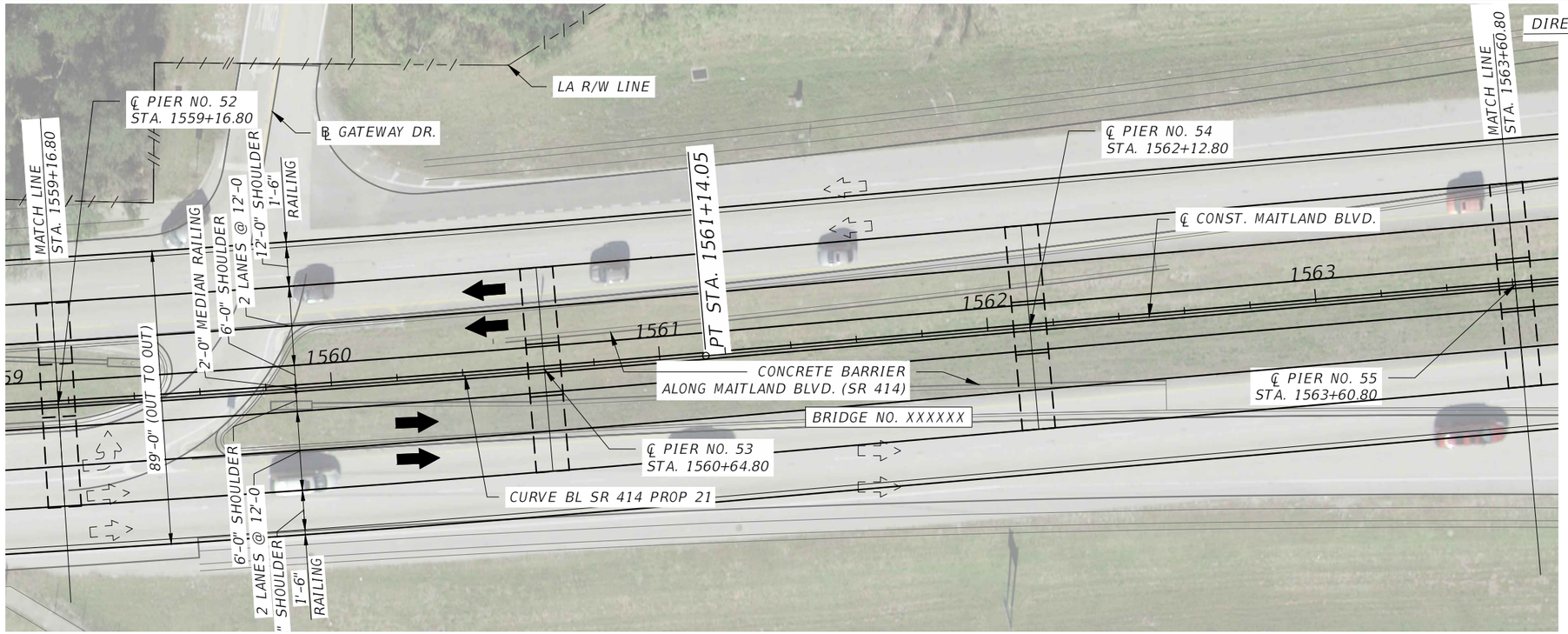

PLAN

8842'-3⅝" OVERALL LENGTH OF BRIDGE
MEASURED ALONG ℄ CONSTRUCTION SR 414 EXPRESSWAY EXTENSION

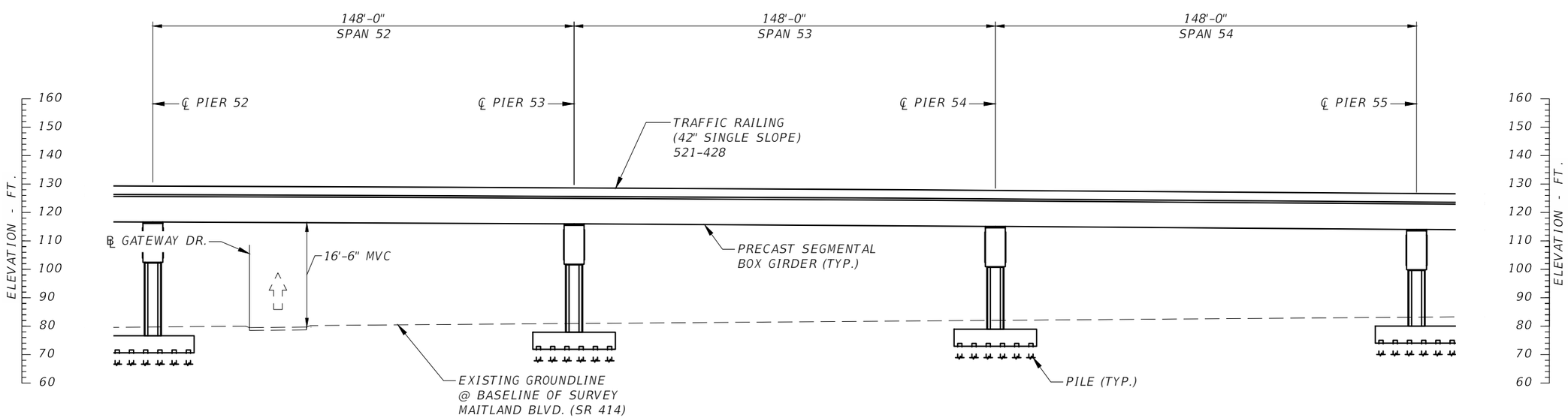

ELEVATION

BRIDGE NO. XXXXXX

REVISIONS			
DATE	DESCRIPTION	DATE	DESCRIPTION

RAM KOZHIKOTE
P.E. LICENSE NUMBER 44022
BASE CONSULTANTS
1214 EAST CONCORD STREET
ORLANDO, FL 32803

SR 414 MAITLAND BLVD.
EXPRESSWAY EXTENSION
US 441 TO SR 434

ROAD NO.	PROJECT NO.
SR 414	414-227

CENTRAL FLORIDA EXPRESSWAY AUTHORITY

SHEET TITLE: PLAN AND ELEVATION (17 OF 19)

REF. DWG. NO.

PROJECT NAME: S.R. 414 EXPRESSWAY EXTENSION
OVER S.R. 414 (US 441 TO SR 434)

SHEET NO. B1-17

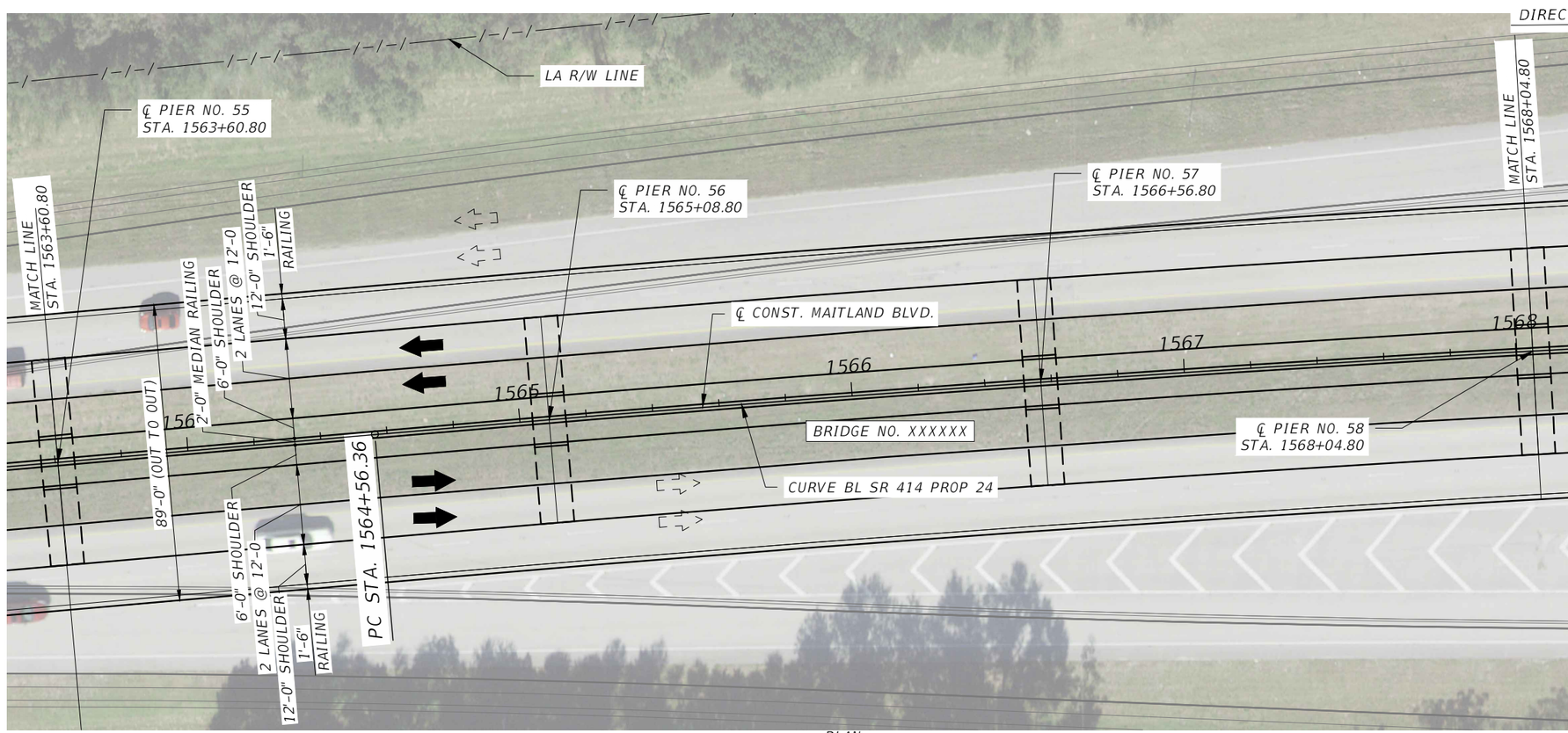

PLAN

8842'-3⅝" OVERALL LENGTH OF BRIDGE
MEASURED ALONG ℄ CONSTRUCTION SR 414 EXPRESSWAY EXTENSION

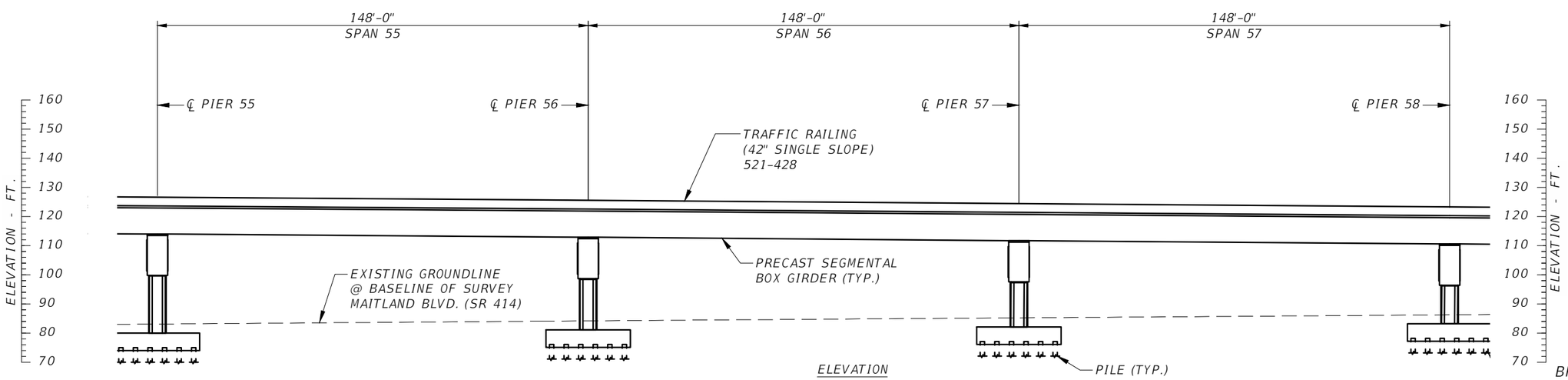

ELEVATION

BRIDGE NO. XXXXXX

REVISIONS			
DATE	DESCRIPTION	DATE	DESCRIPTION

RAM KOZHIKOTE
P.E. LICENSE NUMBER 44022
BASE CONSULTANTS
1214 EAST CONCORD STREET
ORLANDO, FL 32803

SR 414 MAITLAND BLVD.
EXPRESSWAY EXTENSION
US 441 TO SR 434

ROAD NO.	PROJECT NO.
SR 414	414-227

CENTRAL FLORIDA EXPRESSWAY AUTHORITY

SHEET TITLE: PLAN AND ELEVATION (18 OF 19)

REF. DWG. NO.

PROJECT NAME: S.R. 414 EXPRESSWAY EXTENSION
OVER S.R. 414 (US 441 TO SR 434)

SHEET NO. B1-18

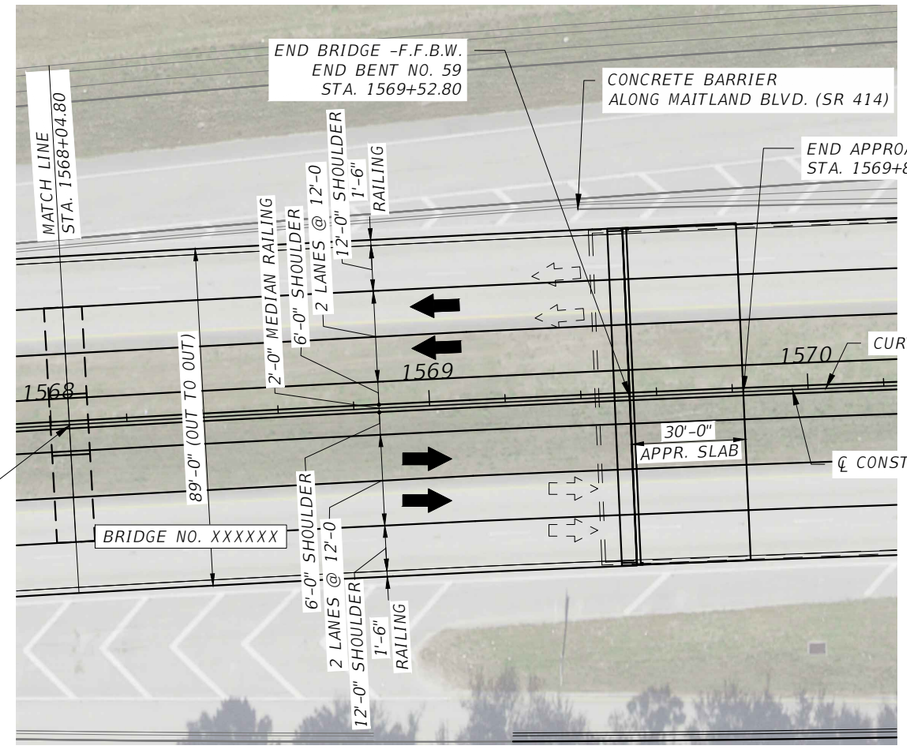

PLAN

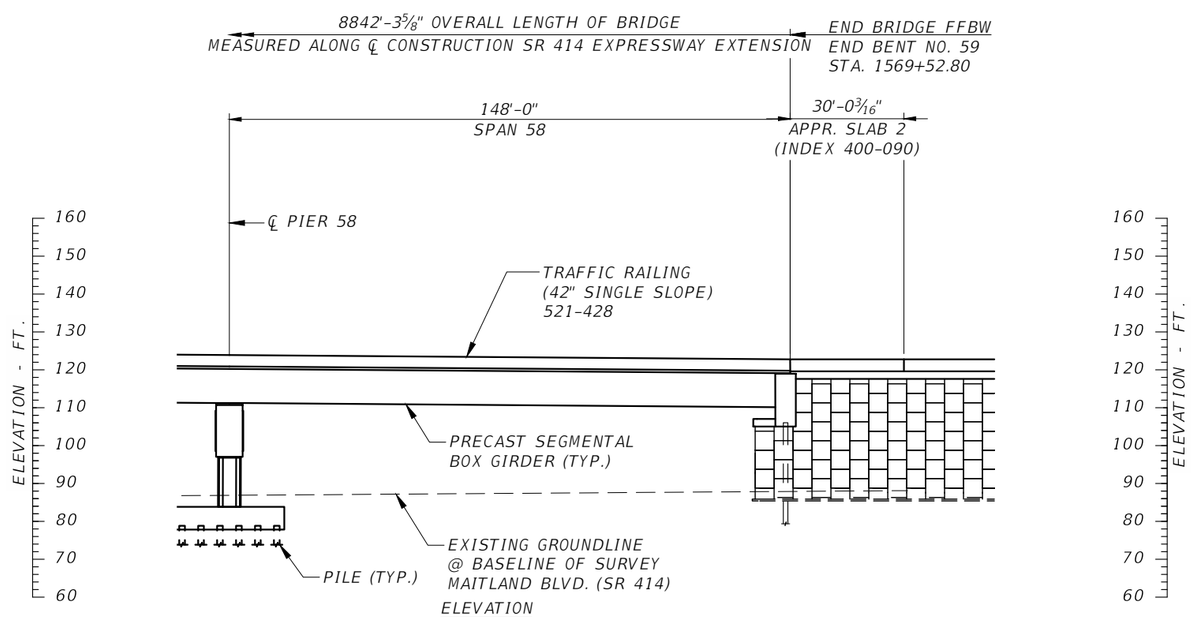

ELEVATION

BRIDGE NO. XXXXXX

REVISIONS			
DATE	DESCRIPTION	DATE	DESCRIPTION

RAM KOZHIKOTE
P.E. LICENSE NUMBER 44022
BASE CONSULTANTS
1214 EAST CONCORD STREET
ORLANDO, FL 32803

SR 414 MAITLAND BLVD.
EXPRESSWAY EXTENSION
US 441 TO SR 434

ROAD NO.	PROJECT NO.
SR 414	414-227

CENTRAL FLORIDA EXPRESSWAY AUTHORITY

SHEET TITLE: PLAN AND ELEVATION (19 OF 19)

REF. DWG. NO.

PROJECT NAME: S.R. 414 EXPRESSWAY EXTENSION OVER S.R. 414 (US 441 TO SR 434)

SHEET NO. B1-19

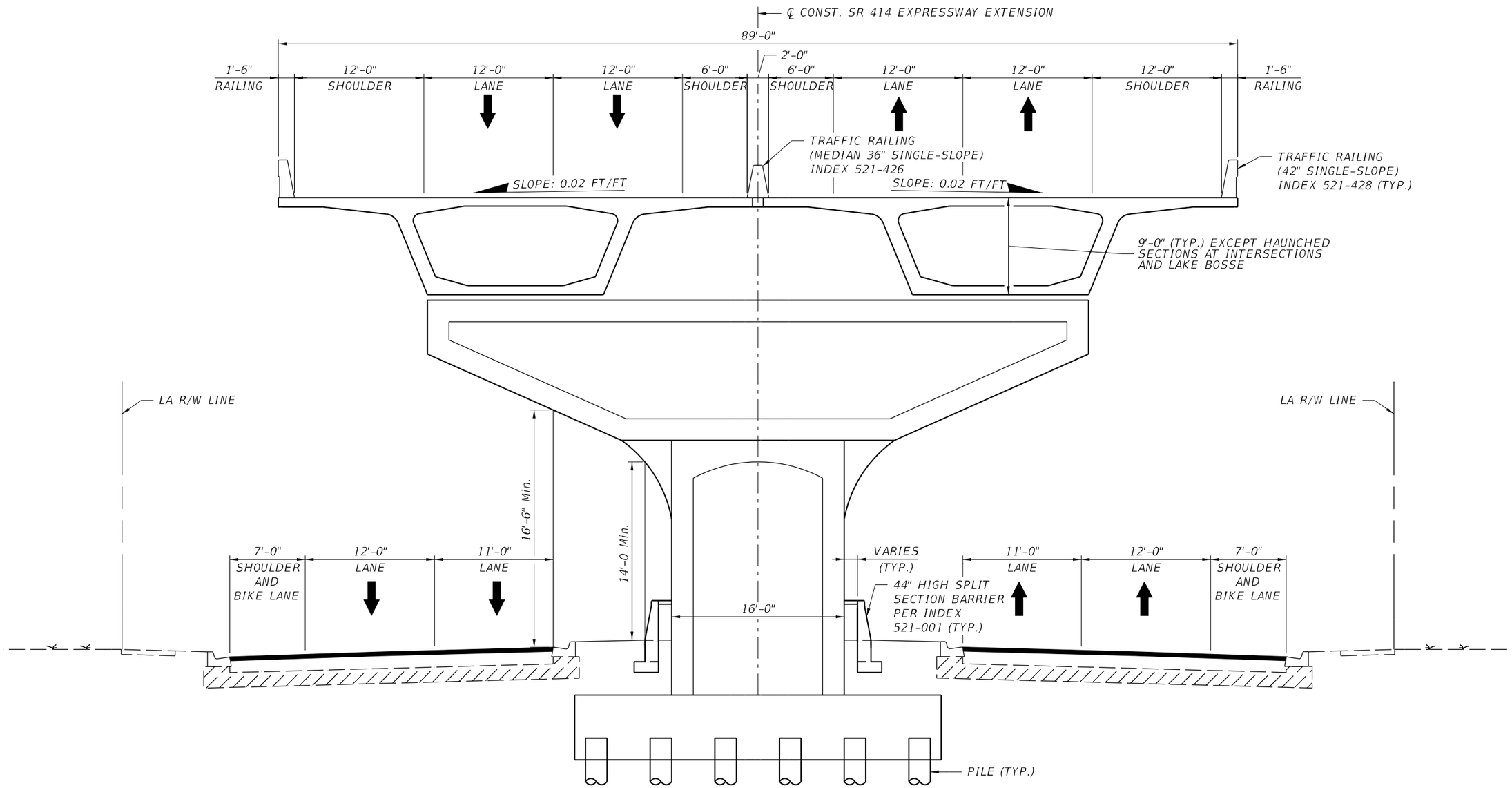

TYPICAL VIADUCT SECTION - TWIN BOX ALTERNATIVE

BRIDGE NO. XXXXXX

REVISIONS			
DATE	DESCRIPTION	DATE	DESCRIPTION

ENGINEER OF RECORD: BHUSHAN A. GODBOLE P.E.
P.E. LICENSE NO. 54325

JACOBS ENGINEERING GROUP INC.
200 W. FORSYTH STREET, SUITE 1520
JACKSONVILLE, FL 32202

SR 414 MAITLAND BLVD.
EXPRESSWAY EXTENSION
US 441 TO SR 434

ROAD NO.	PROJECT NO.
SR 414	414-227

CENTRAL FLORIDA EXPRESSWAY AUTHORITY

SHEET TITLE: TYPICAL TWIN BOX BRIDGE SECTION

REF. DWG. NO.

PROJECT NAME: S.R. 414 EXPRESSWAY EXTENSION OVER S.R. 414 (US 441 TO SR 434)

SHEET NO. B1-20

egunders 8/6/2021 12:47:10 PM c:\pw_workdir\den003\ch2mhill_egunders\d0863543\B1TypicalSection01.dgn

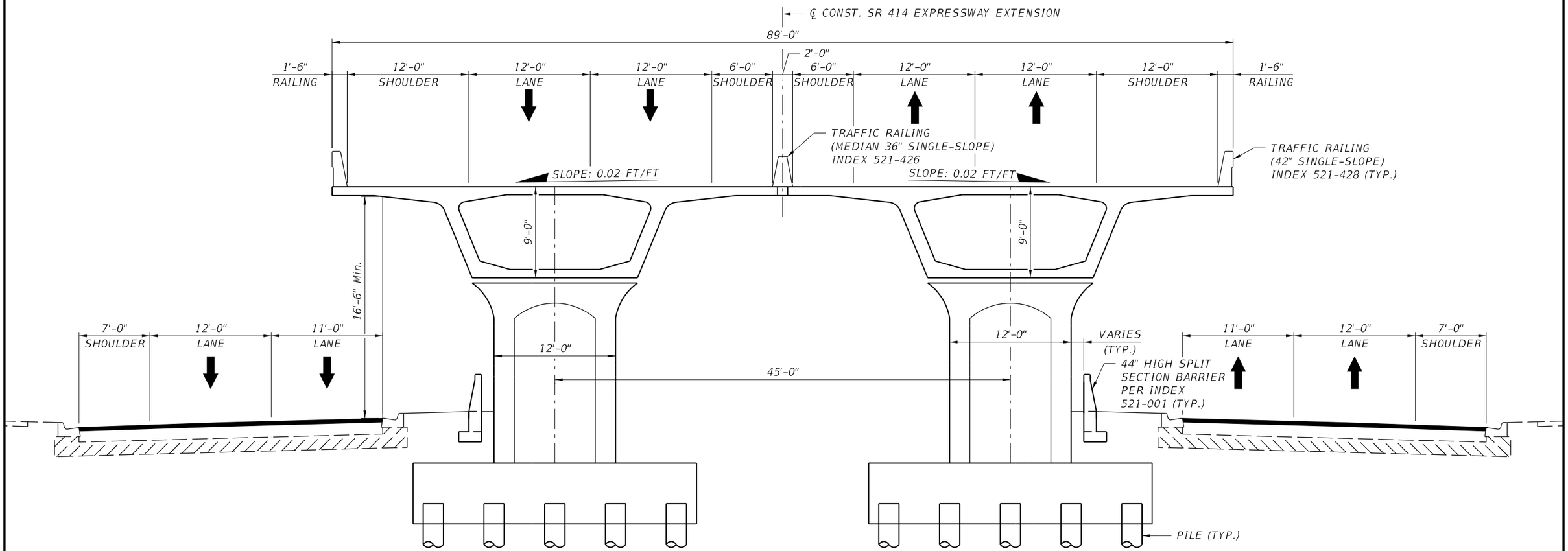

VIADUCT SECTION - TWIN BOX ALTERNATIVE
@ PIER 2 WITH TWIN COLUMNS

BRIDGE NO. XXXXXX

REVISIONS			
DATE	DESCRIPTION	DATE	DESCRIPTION

ENGINEER OF RECORD: BHUSHAN A. GODBOLE P.E.
P.E. LICENSE NO. 54325

JACOBS ENGINEERING GROUP INC.
200 W. FORSYTH STREET, SUITE 1520
JACKSONVILLE, FL 32202

SR 414 MAITLAND BLVD.
EXPRESSWAY EXTENSION
US 441 TO SR 434

ROAD NO.	PROJECT NO.
SR 414	414-227

CENTRAL FLORIDA EXPRESSWAY AUTHORITY

SHEET TITLE: TYPICAL TWIN BOX TWO COLUMN BRIDGE SECTION

REF. DWG. NO.

PROJECT NAME: S.R. 414 EXPRESSWAY EXTENSION
OVER S.R. 414 (US 441 TO SR 434)

SHEET NO. B1-21

egunders 8/4/2021 6:27:05 PM c:\pw_workdir\den003\ch2mhill_egunders\d0863543\B1TypicalSection01.dgn

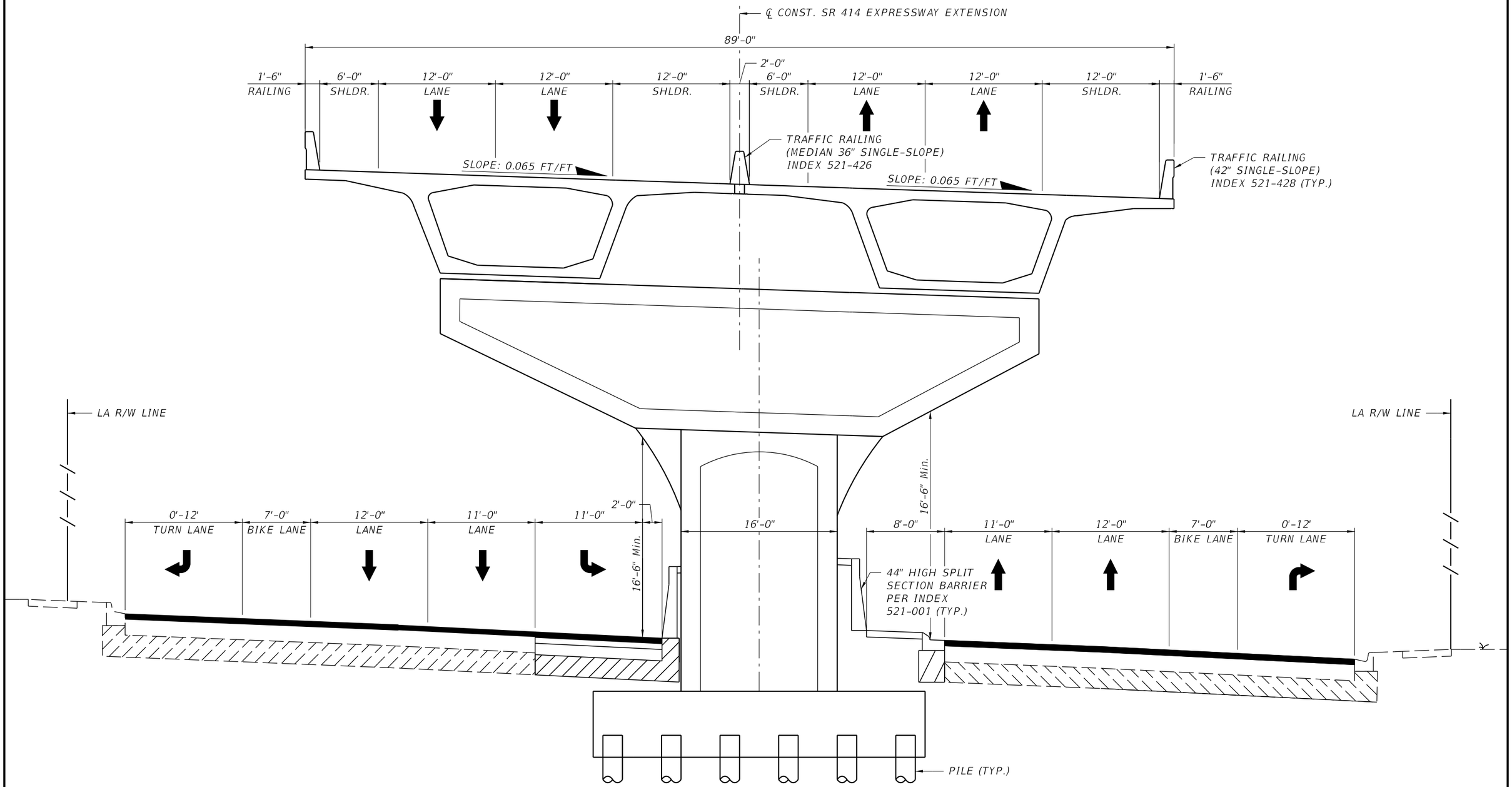

VIADUCT SECTION - TWIN BOX ALTERNATIVE
TYPICAL ECCENTRIC SECTION AT TURN LANE

BRIDGE NO. XXXXXX

REVISIONS			
DATE	DESCRIPTION	DATE	DESCRIPTION

ENGINEER OF RECORD: BHUSHAN A. GODBOLE P.E.
P.E. LICENSE NO. 54325

JACOBS ENGINEERING GROUP INC.
200 W. FORSYTH STREET, SUITE 1520
JACKSONVILLE, FL 32202

SR 414 MAITLAND BLVD.
EXPRESSWAY EXTENSION
US 441 TO SR 434

ROAD NO.	PROJECT NO.
SR 414	414-227

CENTRAL FLORIDA EXPRESSWAY AUTHORITY

SHEET TITLE: TYPICAL ECCENTRIC COLUMN BRIDGE SECTION

REF. DWG. NO.

PROJECT NAME: S.R. 414 EXPRESSWAY EXTENSION
OVER S.R. 414 (US 441 TO SR 434)

SHEET NO. B1-22

egunders 8/6/2021 12:52:19 PM c:\pw_workdir\den003\ch2mhill_egunders\d0863543\B1TypicalSection01.dgn

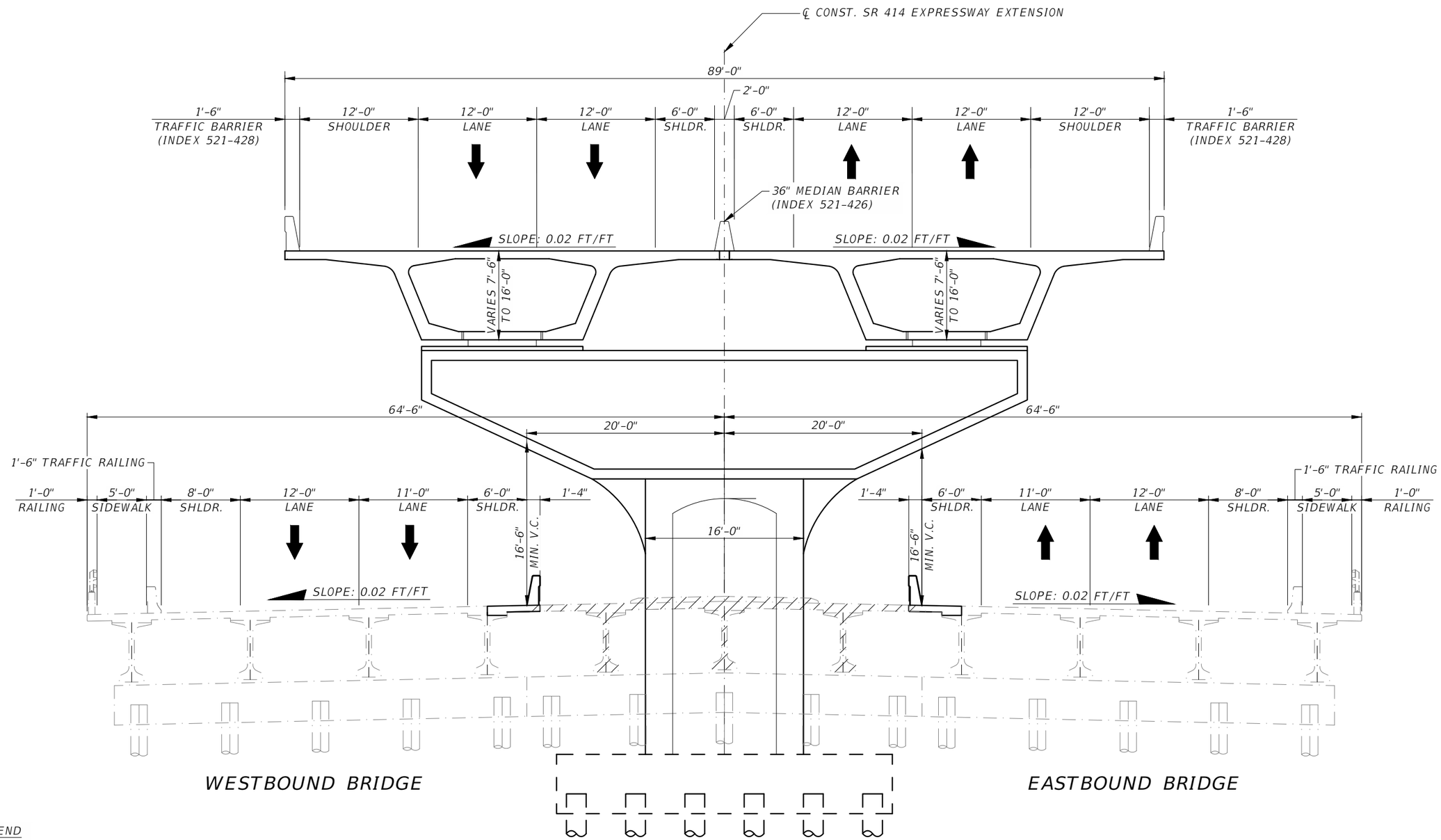

LEGEND

EXISTING STRUCTURE TO BE REMOVED

TYPICAL SECTION
(@ LAKE BOSSE APPROACH SPANS)

BRIDGE NO. XXXXXX

REVISIONS			
DATE	DESCRIPTION	DATE	DESCRIPTION

RAM KOZHIKOTE
P.E. LICENSE NUMBER 44022
BASE CONSULTANTS
1214 EAST CONCORD STREET
ORLANDO, FL 32803

SR 414 MAITLAND BLVD.
EXPRESSWAY EXTENSION
US 441 TO SR 434

ROAD NO.	PROJECT NO.
SR 414	414-227

CENTRAL FLORIDA EXPRESSWAY AUTHORITY

SHEET TITLE: TYPICAL BRIDGE SECTION (4 OF 6)

REF. DWG. NO.

PROJECT NAME: S.R. 414 EXPRESSWAY EXTENSION OVER S.R. 414 (US 441 TO SR 434)

SHEET NO. B1-23

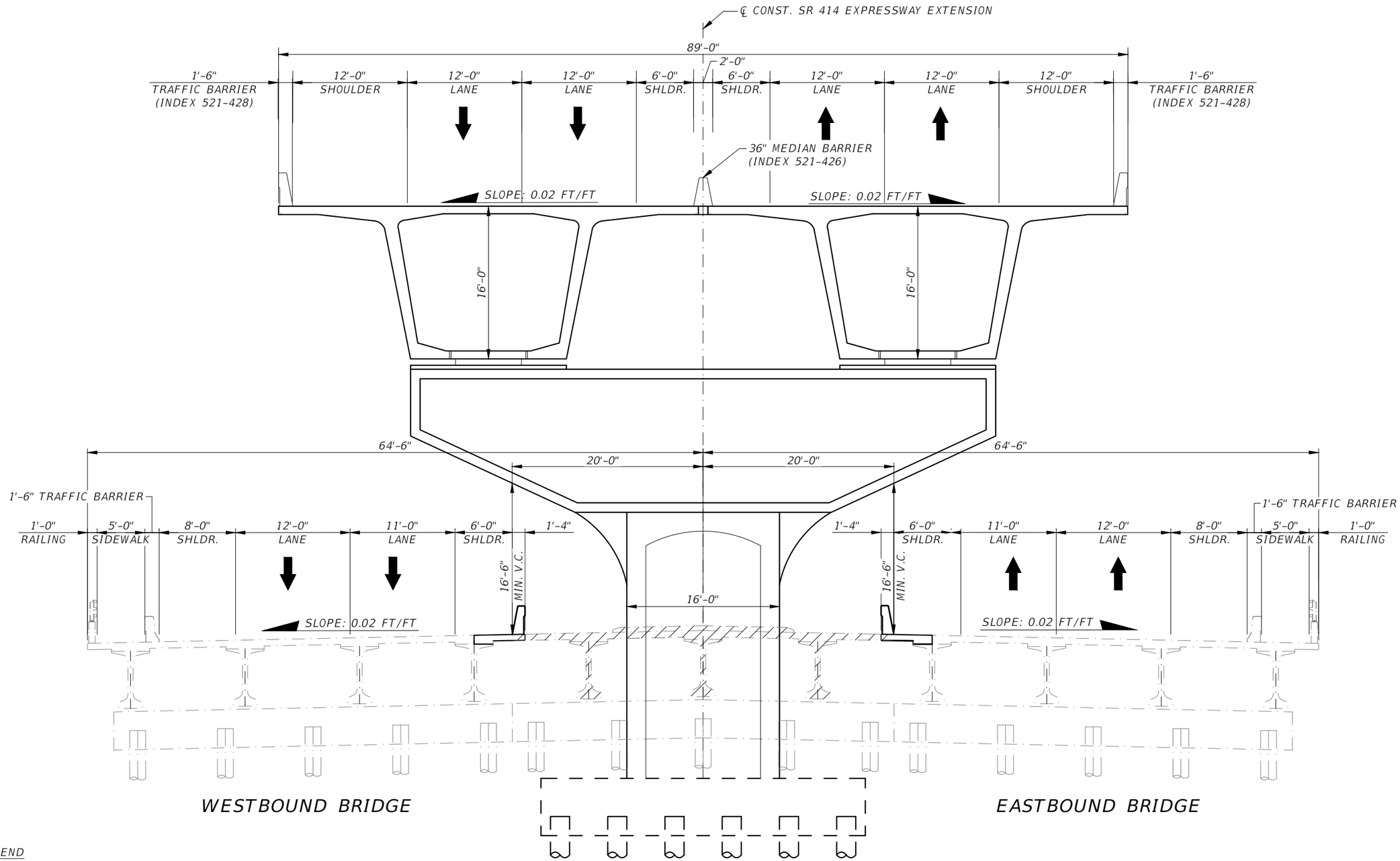

LEGEND

EXISTING STRUCTURE TO BE REMOVED

TYPICAL VIADUCT SECTION - TWIN BOX ALTERNATIVE
SR 414 EXPRESSWAY EXT. OVER LAKE BOSSE
@ PIER 36 AND 37

BRIDGE NO. XXXXXX

REVISIONS			
DATE	DESCRIPTION	DATE	DESCRIPTION

RAM KOZHIKOTE
P.E. LICENSE NUMBER 44022
BASE CONSULTANTS
1214 EAST CONCORD STREET
ORLANDO, FL 32803

SR 414 MAITLAND BLVD.
EXPRESSWAY EXTENSION
US 441 TO SR 434

ROAD NO.	PROJECT NO.
SR 414	414-227

CENTRAL FLORIDA EXPRESSWAY AUTHORITY

SHEET TITLE: TYPICAL BRIDGE SECTION (5 OF 6)

REF. DWG. NO.

PROJECT NAME: S.R. 414 EXPRESSWAY EXTENSION OVER S.R. 414 (US 441 TO SR 434)

SHEET NO. B1-24

Rashad 8/6/2021 9:32:01 PM P:\Projects-Transportation\Jacobs\CFX 414-227_SR 414 Expressway_Ext_PDE\CAD\Struct\B01TypicalSection01.dwg

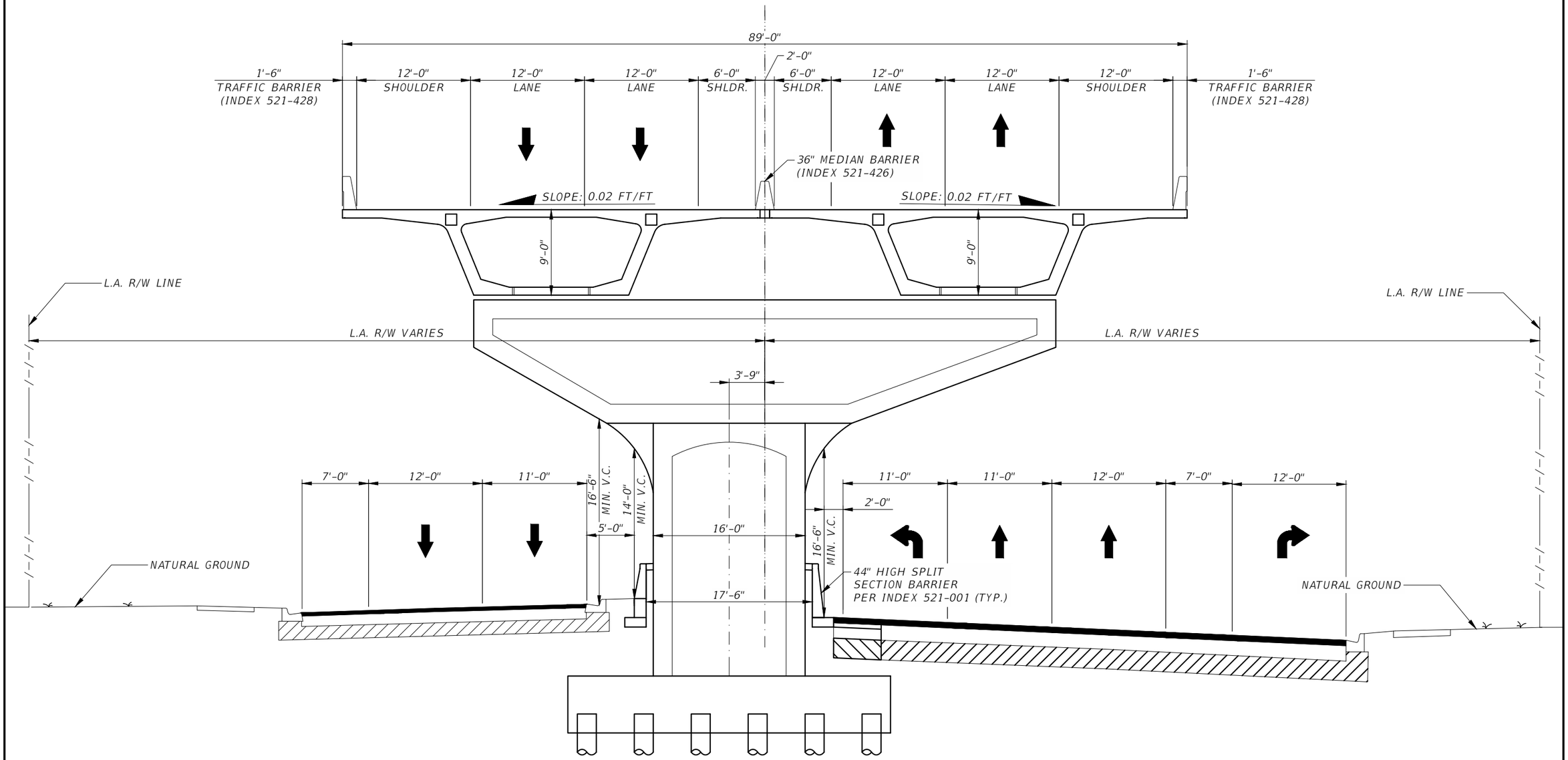

TYPICAL VIADUCT SECTION
(ECCENTRIC SECTION @ GATEWAY DR. TURN LANE SHOWN. EDEN PARK & MAGNOLIA HOMES SIMILAR)

BRIDGE NO. XXXXXX

REVISIONS			
DATE	DESCRIPTION	DATE	DESCRIPTION

RAM KOZHIKOTE
P.E. LICENSE NUMBER 44022
BASE CONSULTANTS
1214 EAST CONCORD STREET
ORLANDO, FL 32803

SR 414 MAITLAND BLVD.
EXPRESSWAY EXTENSION
US 441 TO SR 434

ROAD NO.	PROJECT NO.
SR 414	414-227

CENTRAL FLORIDA EXPRESSWAY AUTHORITY

SHEET TITLE: TYPICAL BRIDGE SECTION (6 OF 6)

REF. DWG. NO.

PROJECT NAME: S.R. 414 EXPRESSWAY EXTENSION
OVER S.R. 414 (US 441 TO SR 434)

SHEET NO. B1-25

Rashad 8/6/2021 1:24:27 PM

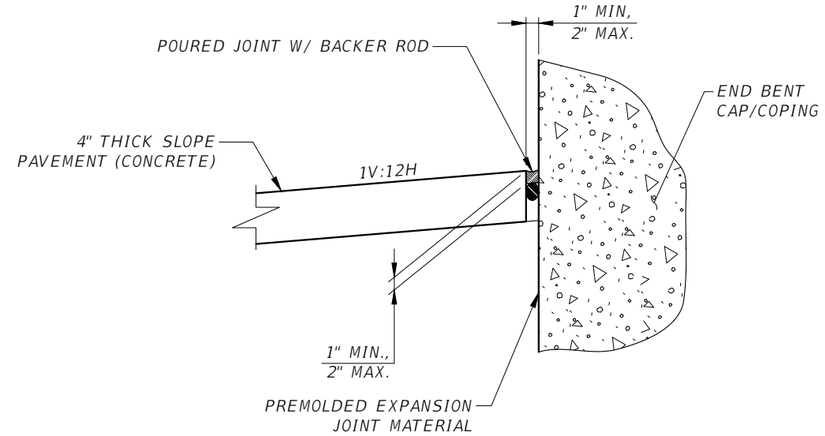

DETAIL A

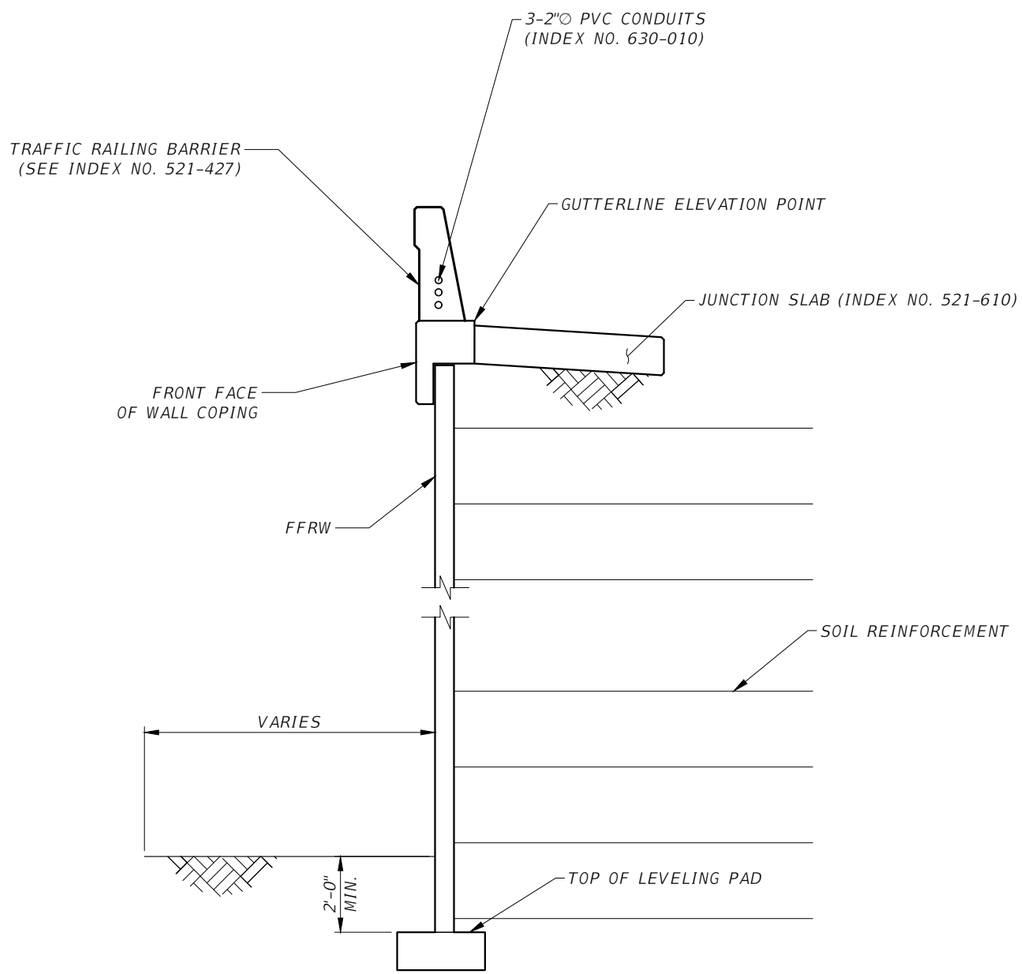

TYPICAL WALL SECTION

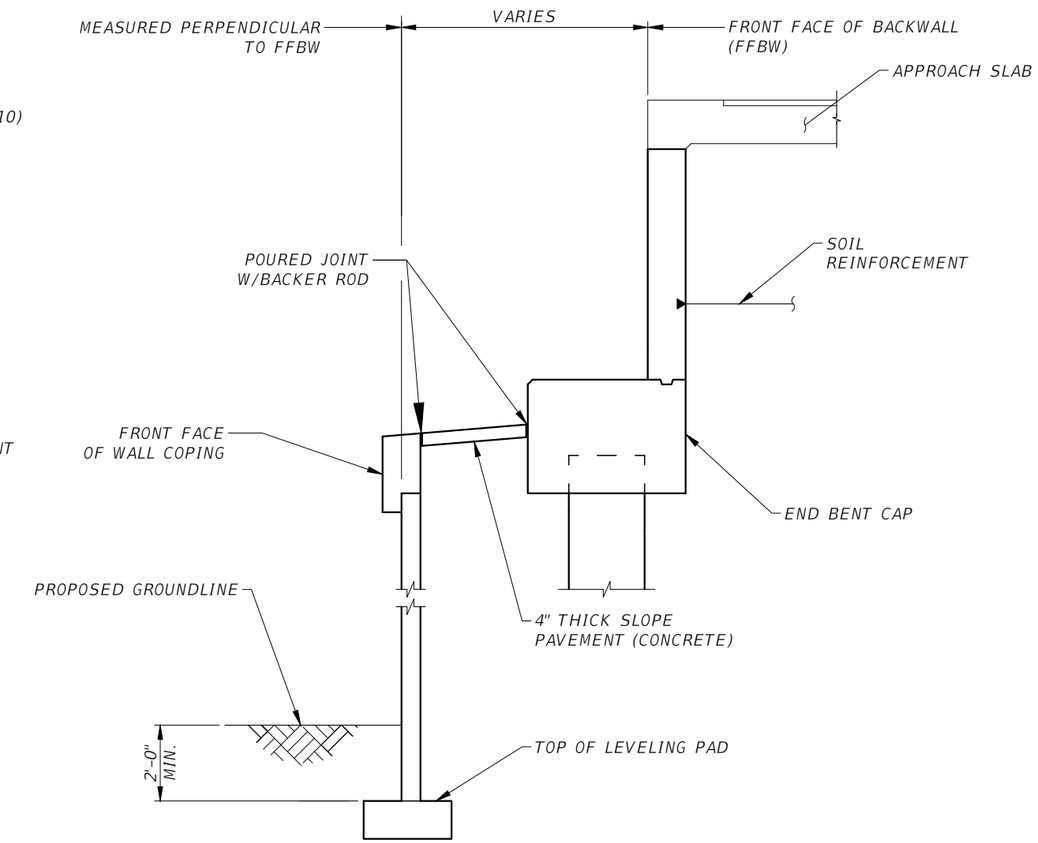

SECTION THRU END BENT (TYP.)

REVISIONS			
DATE	DESCRIPTION	DATE	DESCRIPTION

RAM KOZHIKOTE
P.E. LICENSE NUMBER 44022
BASE CONSULTANTS
1214 EAST CONCORD STREET
ORLANDO, FL 32803

SR 414 MAITLAND BLVD.
EXPRESSWAY EXTENSION
US 441 TO SR 434

ROAD NO.	PROJECT NO.
SR 414	414-227

CENTRAL FLORIDA EXPRESSWAY AUTHORITY

SHEET TITLE: PERMANENT RETAINING WALL DETAILS

REF. DWG. NO.

PROJECT NAME: S.R. 414 EXPRESSWAY EXTENSION
OVER S.R. 414 (US 441 TO SR 434)

SHEET NO. B1-26

Rashad 8/6/2021 4:24:34 PM P:\Projects-Transportation\Jacobs\CFX 414-227_SR 414 Expressway_Ext_PDE\CAD\Struct\B01EndBentDet01.dwg

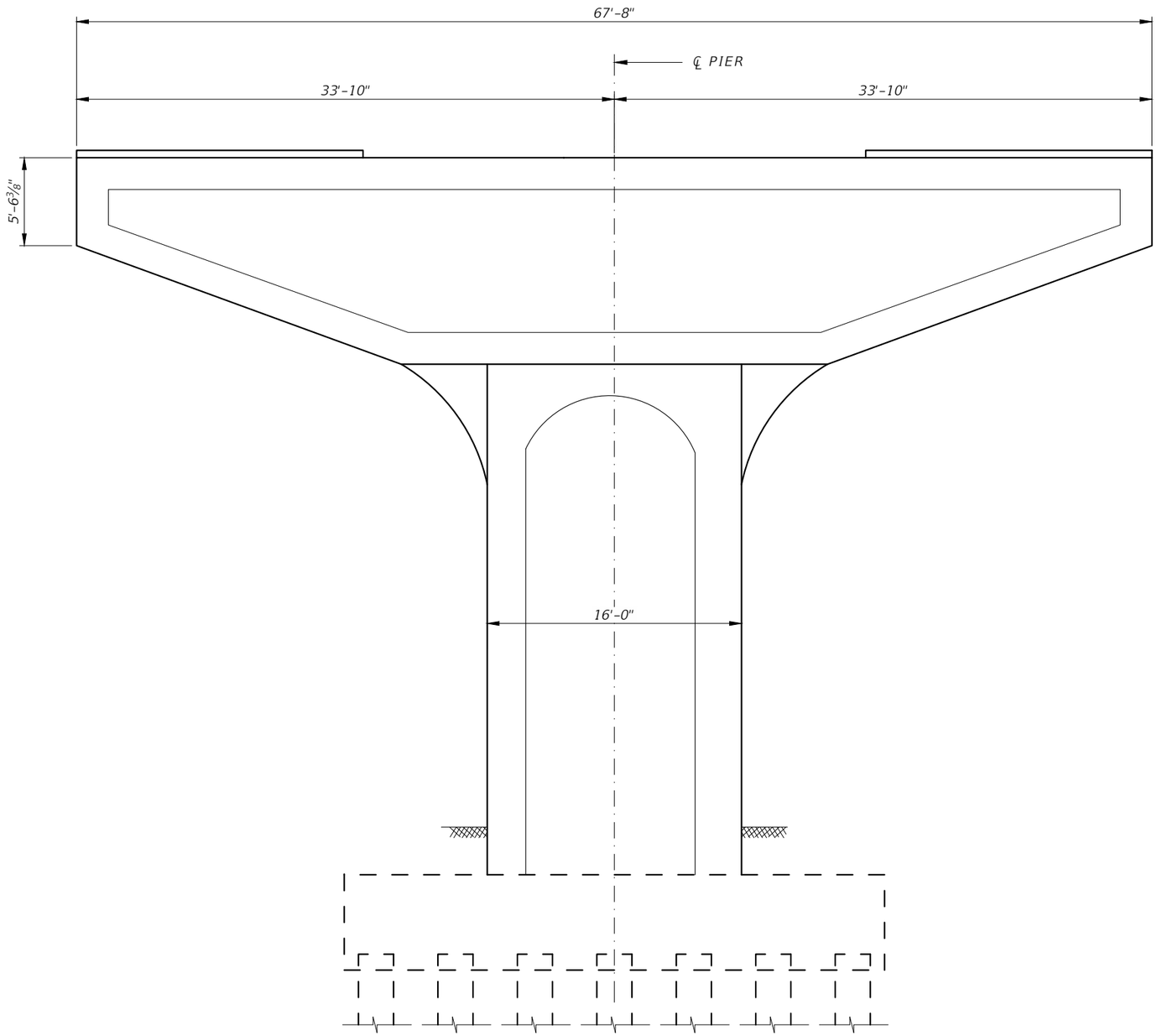

ELEVATION

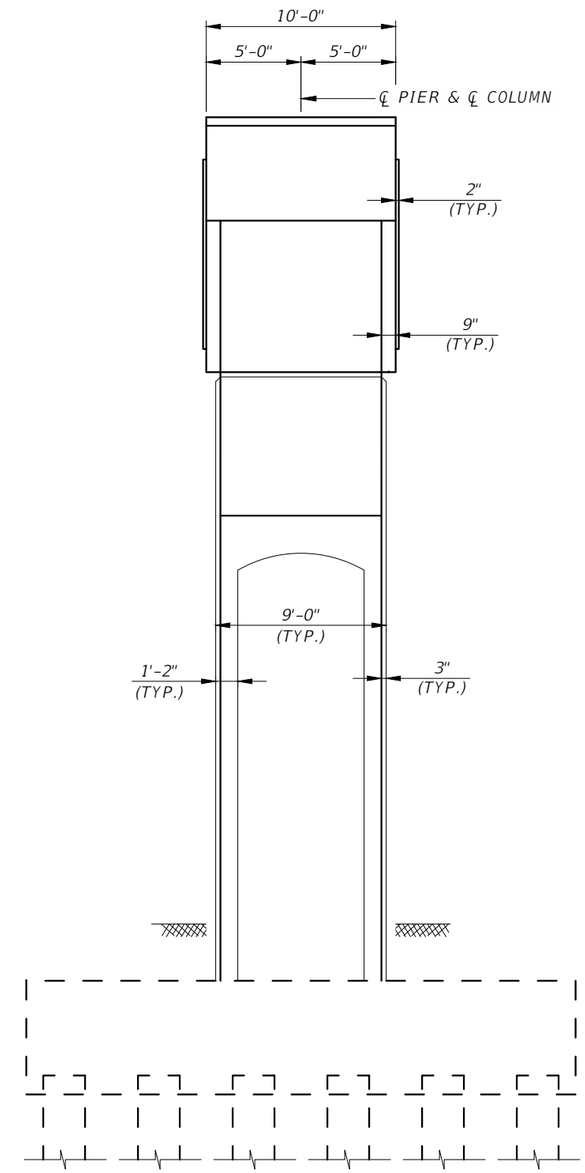

END VIEW

BRIDGE NO. XXXXXX

REVISIONS			
DATE	DESCRIPTION	DATE	DESCRIPTION

RAM KOZHIKOTE
P.E. LICENSE NUMBER 44022
BASE CONSULTANTS
1214 EAST CONCORD STREET
ORLANDO, FL 32803

SR 414 MAITLAND BLVD.
EXPRESSWAY EXTENSION
US 441 TO SR 434

ROAD NO.	PROJECT NO.
SR 414	414-227

CENTRAL FLORIDA EXPRESSWAY AUTHORITY

SHEET TITLE: CONCEPTUAL PIER AESTHETICS

REF. DWG. NO.

PROJECT NAME: S.R. 414 EXPRESSWAY EXTENSION
OVER S.R. 414 (US 441 TO SR 434)

SHEET NO. B1-27

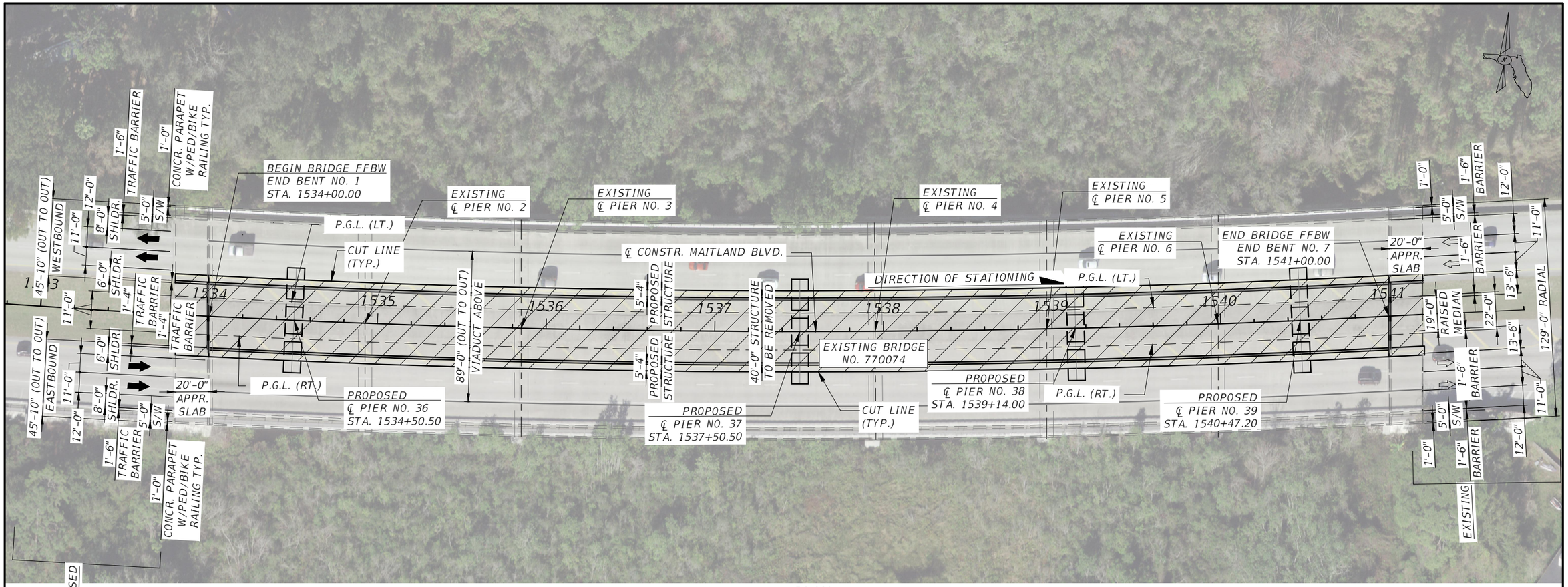

PLAN

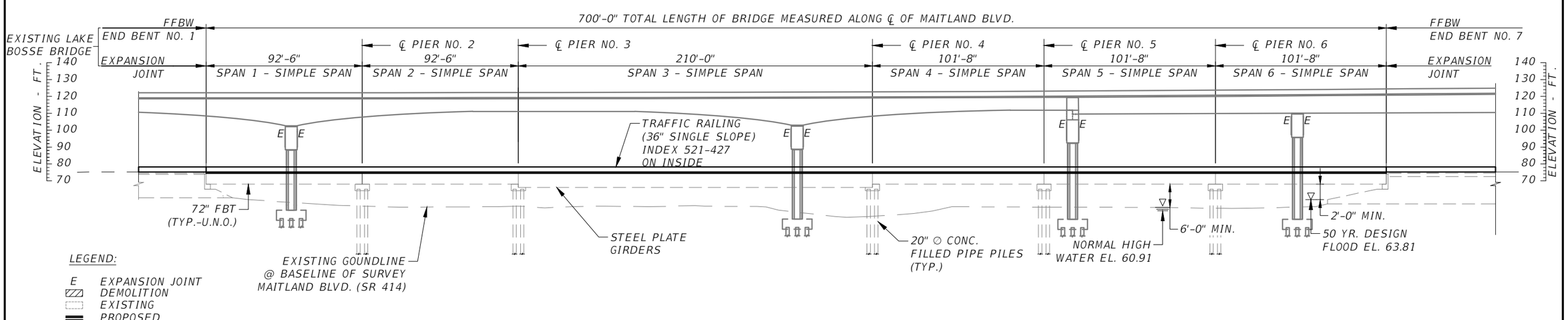

ELEVATION

BRIDGE NO. 770074

REVISIONS			
DATE	DESCRIPTION	DATE	DESCRIPTION

RAM KOZHIKOTE
P.E. LICENSE NUMBER 44022
BASE CONSULTANTS
1214 EAST CONCORD STREET
ORLANDO, FL 32803

SR 414 MAITLAND BLVD.
EXPRESSWAY EXTENSION
US 441 TO SR 434

ROAD NO.	PROJECT NO.
SR 414	414-227

CENTRAL FLORIDA EXPRESSWAY AUTHORITY

SHEET TITLE: PLAN AND ELEVATION

PROJECT NAME: SR 414 (MAITLAND BLVD.) OVER LAKE BOSSE

REF. DWG. NO.

SHEET NO. B2-1

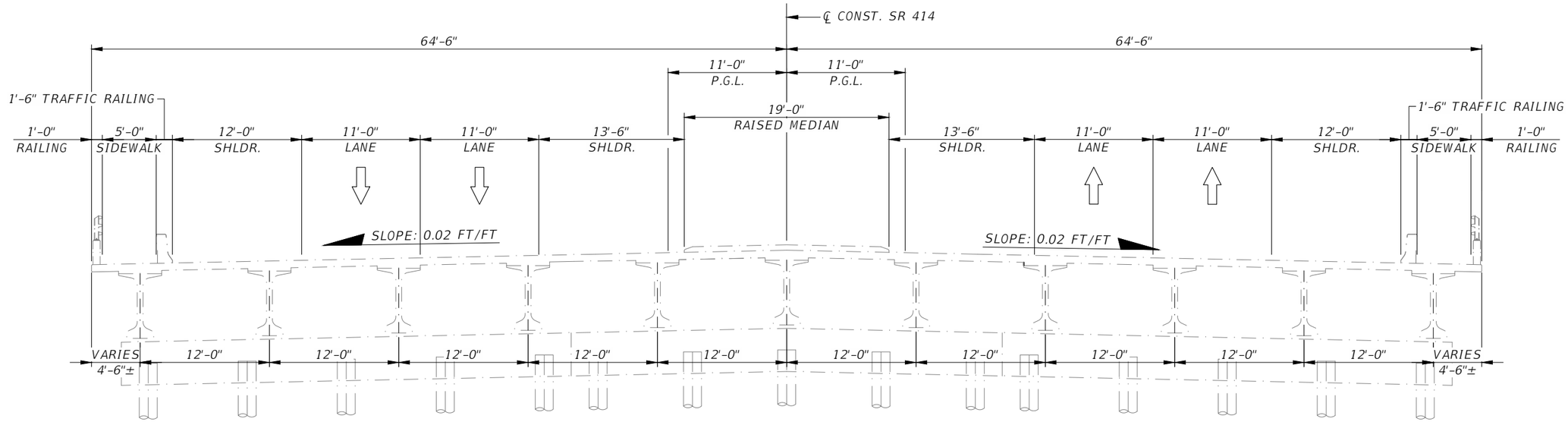

EXISTING TYPICAL SECTION

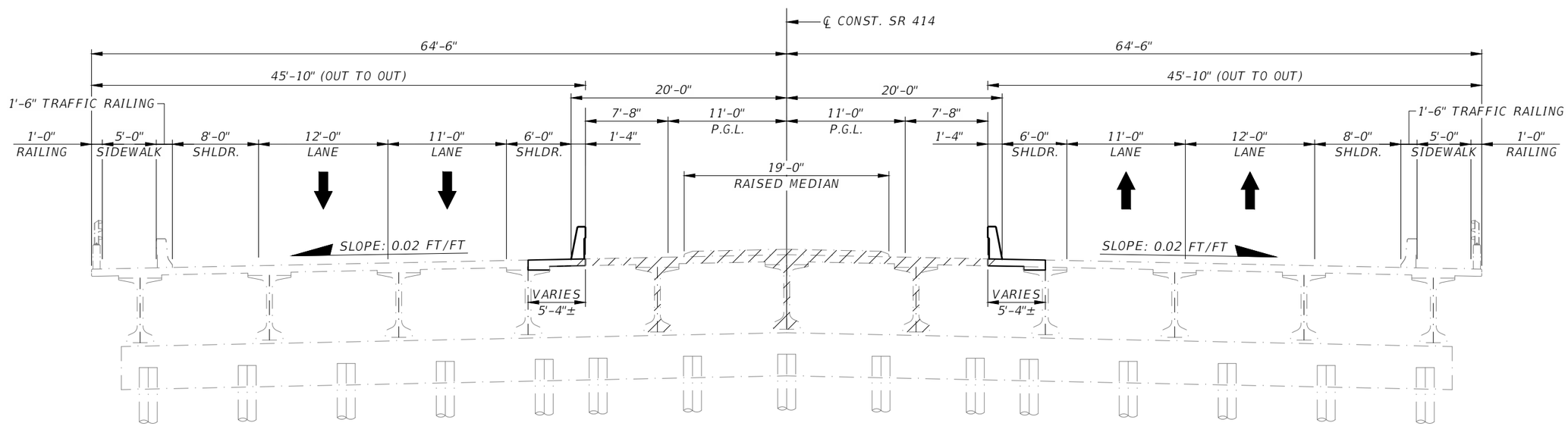

WESTBOUND BRIDGE

PROPOSED TYPICAL SECTION

EASTBOUND BRIDGE

LEGEND

EXISTING STRUCTURE TO BE REMOVED

BRIDGE NO. 770074

REVISIONS			
DATE	DESCRIPTION	DATE	DESCRIPTION

RAM KOZHIKOTE
P.E. LICENSE NUMBER 44022
BASE CONSULTANTS
1214 EAST CONCORD STREET
ORLANDO, FL 32803

SR 414 MAITLAND BLVD.
EXPRESSWAY EXTENSION
US 441 TO SR 434

ROAD NO.	PROJECT NO.
SR 414	414-227

CENTRAL FLORIDA EXPRESSWAY AUTHORITY

SHEET TITLE: TYPICAL BRIDGE SECTION

REF. DWG. NO.

PROJECT NAME: SR 414 (MAITLAND BLVD.) OVER LAKE BOSSE

SHEET NO. B2-2

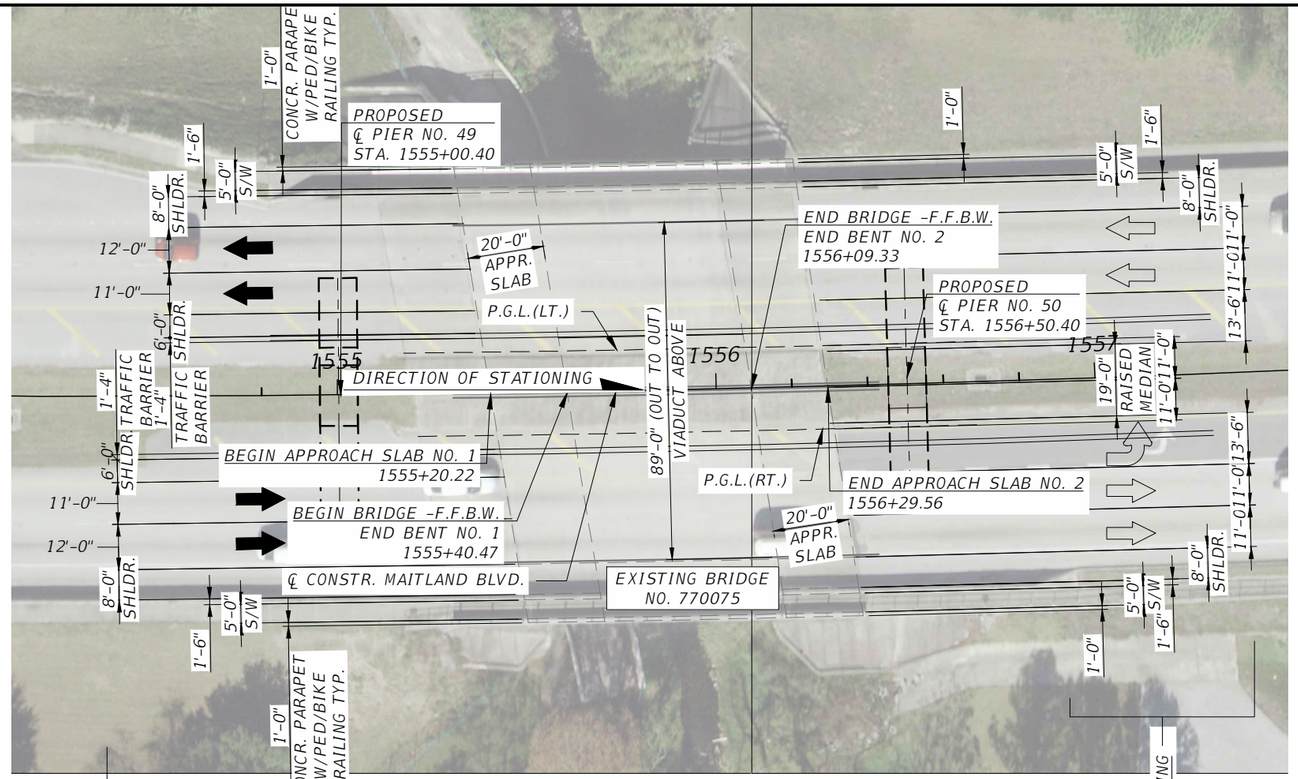

PLAN

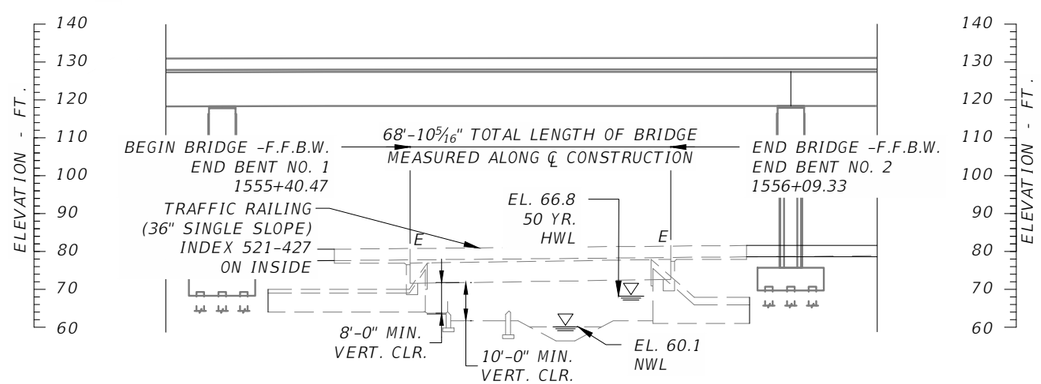

ELEVATION

LEGEND:

E	EXPANSION JOINT
	EXISTING
	PROPOSED

BRIDGE NO. 770075

REVISIONS			
DATE	DESCRIPTION	DATE	DESCRIPTION

RAM KOZHIKOTE
P.E. LICENSE NUMBER 44022
BASE CONSULTANTS
1214 EAST CONCORD STREET
ORLANDO, FL 32803

SR 414 MAITLAND BLVD.
EXPRESSWAY EXTENSION
US 441 TO SR 434

ROAD NO.	PROJECT NO.
SR 414	414-227

CENTRAL FLORIDA EXPRESSWAY AUTHORITY

SHEET TITLE: PLAN AND ELEVATION

REF. DWG. NO.

PROJECT NAME: SR 414 (MAITLAND BLVD.) OVER LITTLE WEKIVA RIVER

SHEET NO. B3-1

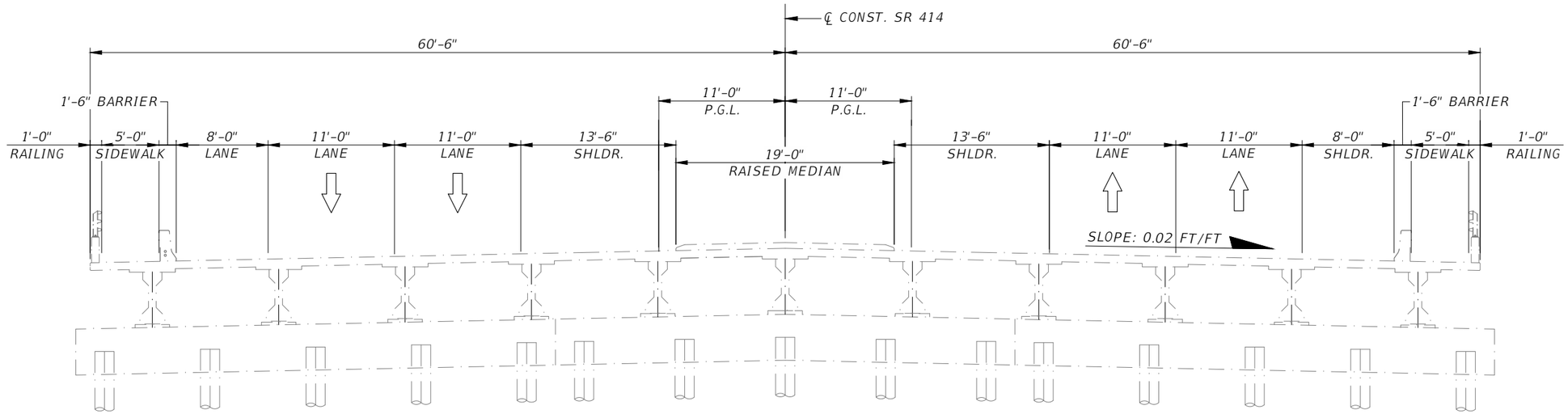

EXISTING TYPICAL SECTION

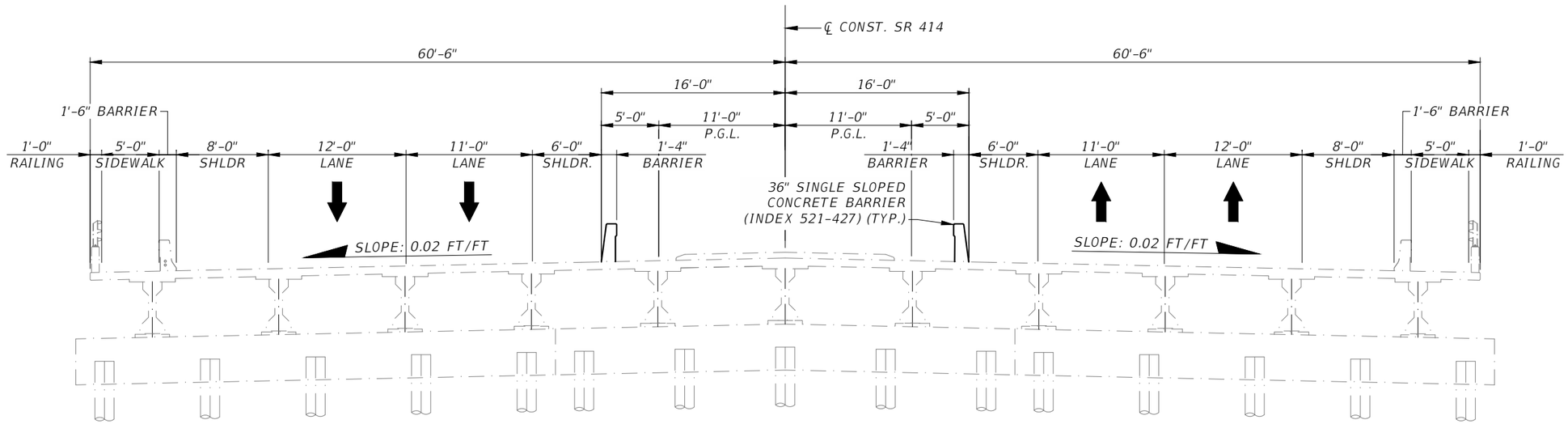

WESTBOUND BRIDGE

PROPOSED TYPICAL SECTION

EASTBOUND BRIDGE

BRIDGE NO. 770075

REVISIONS			
DATE	DESCRIPTION	DATE	DESCRIPTION

RAM KOZHIKOTE
P.E. LICENSE NUMBER 44022
BASE CONSULTANTS
1214 EAST CONCORD STREET
ORLANDO, FL 32803

SR 414 MAITLAND BLVD.
EXPRESSWAY EXTENSION
US 441 TO SR 434

ROAD NO.	PROJECT NO.
SR 414	414-227

CENTRAL FLORIDA EXPRESSWAY AUTHORITY

SHEET TITLE: TYPICAL BRIDGE SECTION

REF. DWG. NO.

PROJECT NAME: SR 414 (MAITLAND BLVD.) OVER LITTLE WEKIVA RIVER

SHEET NO. B3-2

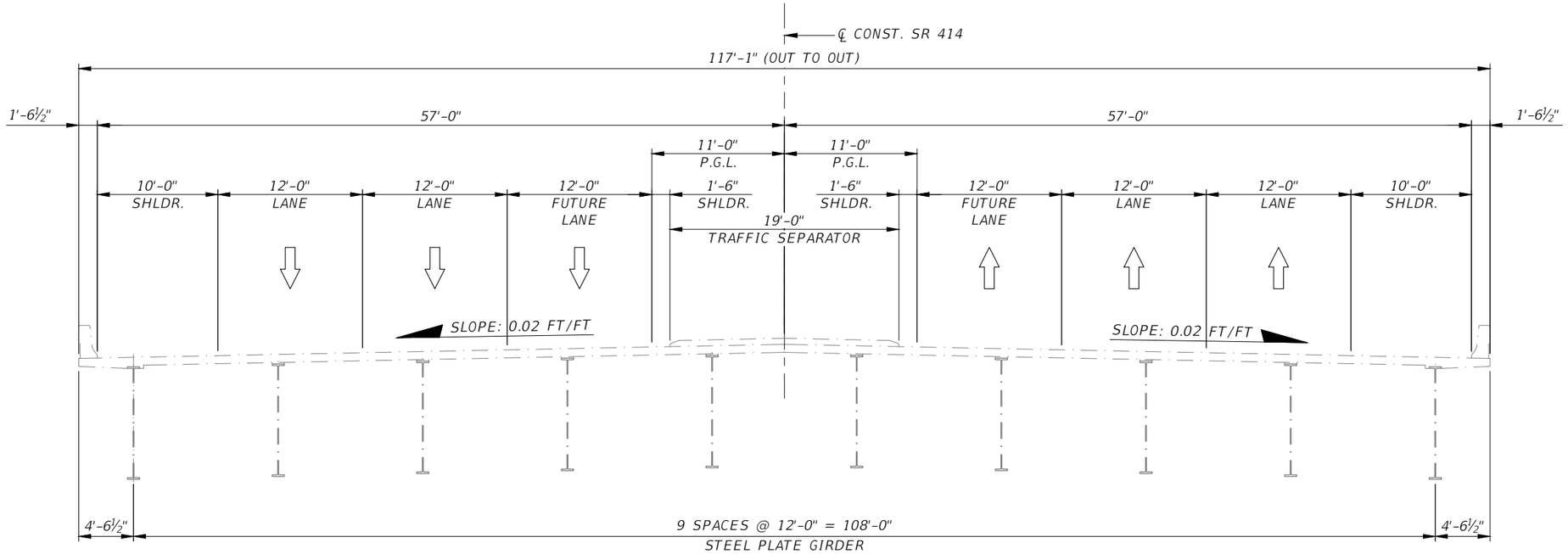

EXISTING TYPICAL SECTION

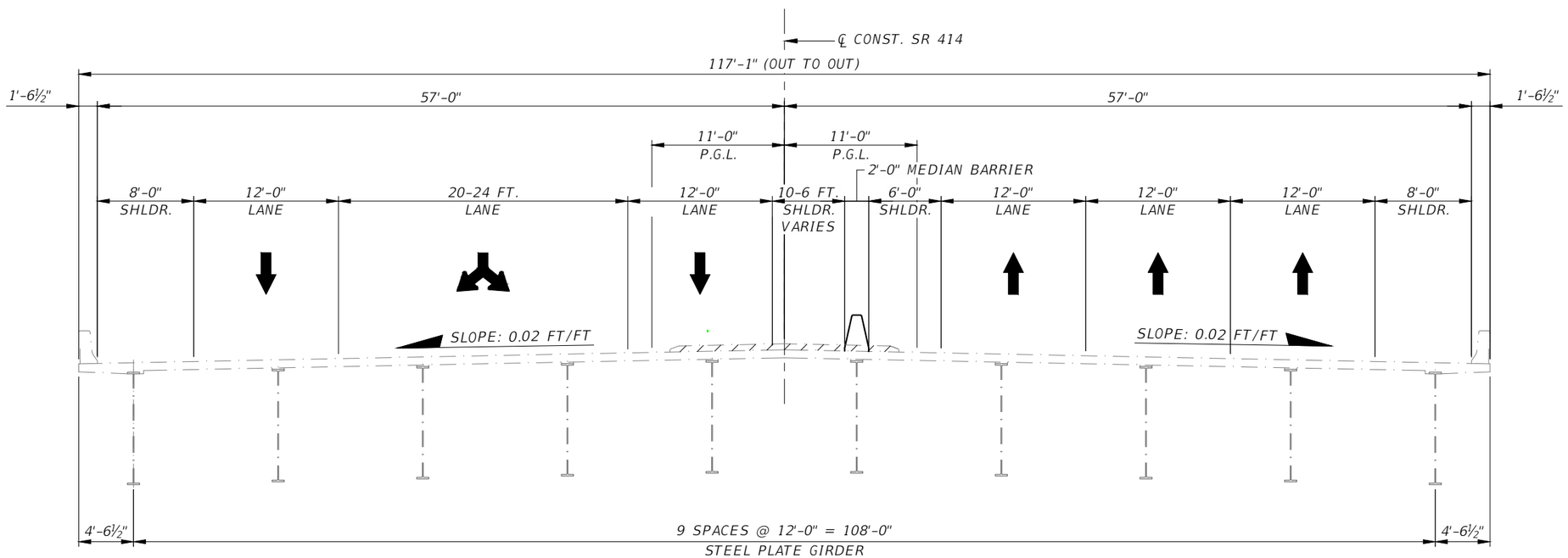

LEGEND

EXISTING STRUCTURE TO BE REMOVED

PROPOSED TYPICAL SECTION

BRIDGE NO. 770083

REVISIONS			
DATE	DESCRIPTION	DATE	DESCRIPTION

RAM KOZHIKOTE
P.E. LICENSE NUMBER 44022
BASE CONSULTANTS
1214 EAST CONCORD STREET
ORLANDO, FL 32803

SR 414 MAITLAND BLVD.
EXPRESSWAY EXTENSION
US 441 TO SR 434

ROAD NO.	PROJECT NO.
SR 414	414-227

CENTRAL FLORIDA EXPRESSWAY AUTHORITY

SHEET TITLE: TYPICAL BRIDGE SECTION

REF. DWG. NO.

PROJECT NAME: SR 414 (MAITLAND BLVD.) OVER SR 434

SHEET NO. B4-1

Rashad 8/6/2021 9:20:23 PM P:\Projects-Transportation\Jacobs\CFX 414-227_SR 414 Expressway_Ext_PDE\CAD\Struct\B4-SR 434\B4TypicalSection01.dwg

Appendix B
Existing Bridge Plans

Appendix B: Existing Bridge Plans

1. **SR 414 Over US 441 (Bridge No. 750743)**
2. **SR 414 Over Lake Bosse (Bridge No. 770074)**
3. **SR 414 Over Little Wekiva River (Bridge No. 770075)**
4. **SR 414 Over SR 434 (Bridge No. 770083)**

THIS CONTRACT PLAN SET INCLUDES:

ROADWAY PLANS (VOL. 1)
SIGNING AND PAVEMENT MARKING PLANS (VOL. 2)
SIGNALIZATION PLANS (VOL. 2)
LIGHTING PLANS (VOL. 2)
FIBER OPTIC PLANS (VOL. 2)
STRUCTURE PLANS (VOL. 2)
UTILITY RELOCATION AND IMPROVEMENTS (VOL. 2)

A DETAILED INDEX APPEARS ON THE KEY SHEET OF EACH COMPONENT SET OF PLANS

ORLANDO-ORANGE COUNTY EXPRESSWAY AUTHORITY

CONTRACT PLANS

STATE ROAD NUMBER 414
MAITLAND BOULEVARD EXTENSION
ORANGE COUNTY
OOCEA PROJECT NO. 414-211

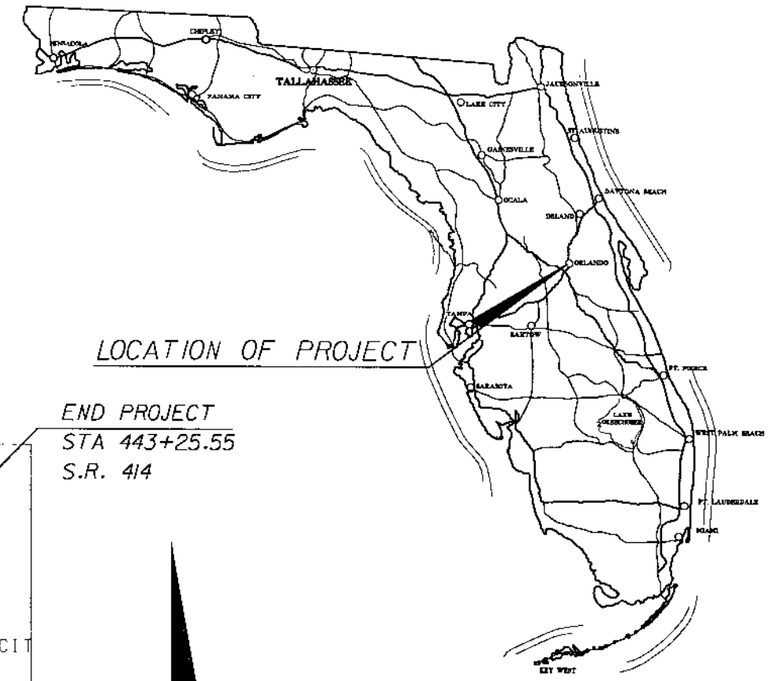

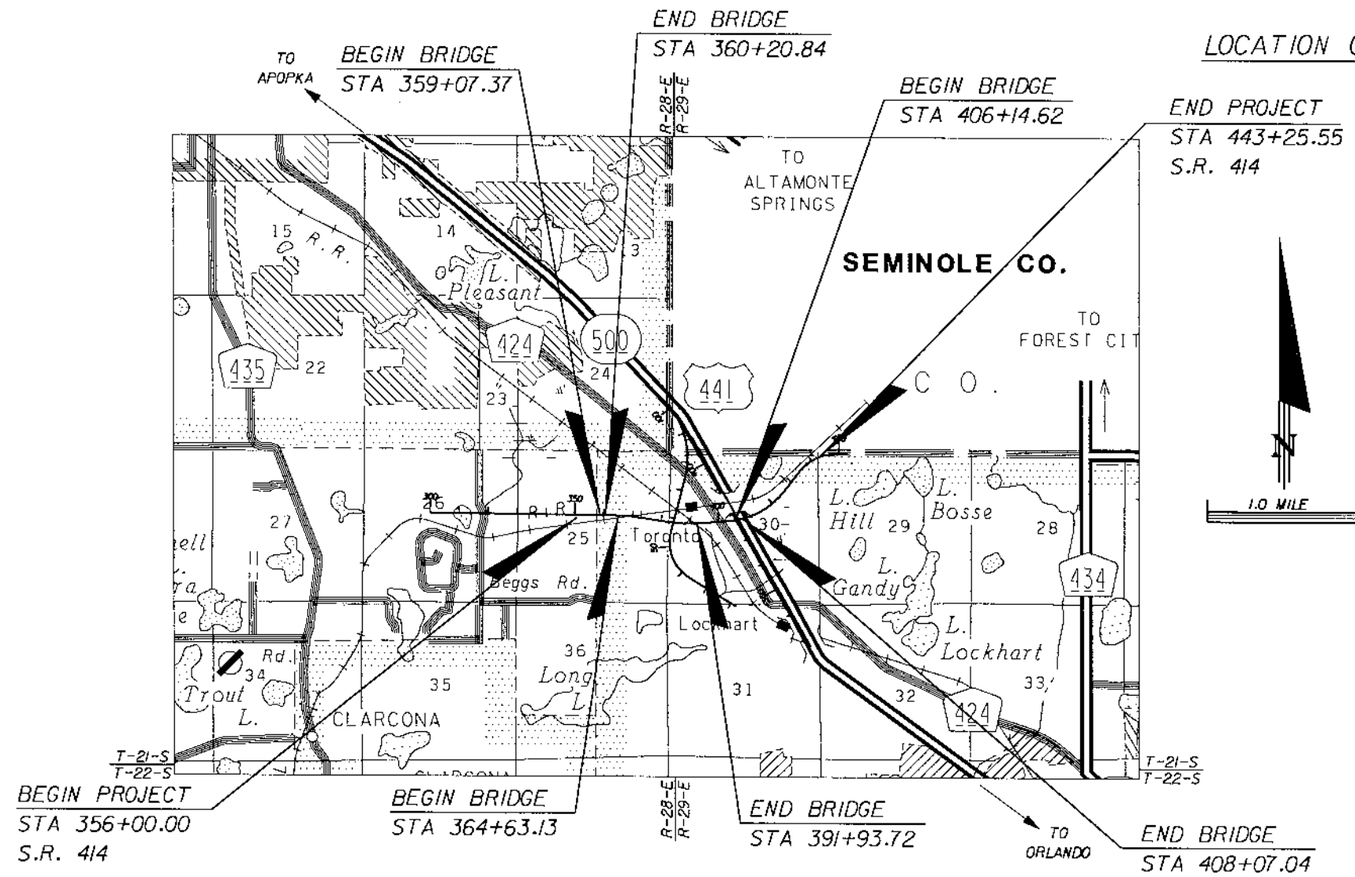

ROADWAY SHOP DRAWINGS TO BE SUBMITTED TO:

RODGER P. SCHMIDT, P.E.
2420 LAKEMONT AVE., SUITE 450
ORLANDO, FL 32814
(407) 702-6800

PLANS PREPARED BY:

PARSONS
2420 LAKEMONT AVE., Suite 450, ORLANDO, FL 32814
PHONE: (407) 702-6800
CERTIFICATE OF AUTHORIZATION NO. 1838
VENDOR NO. 36-098-270

PLANS PREPARED FOR:
ORLANDO-ORANGE COUNTY EXPRESSWAY AUTHORITY

CHAIRMAN	ALLAN E. KEEN
VICE CHAIRMAN	ORLANDO L. EVORA
SECRETARY/TREASURER	ARTHUR J. LEE
EX-OFFICIO MEMBER	RICHARD T. CROTTY
EX-OFFICIO MEMBER	NORANNE B. DOWNS, P.E.
EXECUTIVE DIRECTOR	MICHAEL SNYDER, P.E.

GOVERNING STANDARDS AND SPECIFICATIONS:
FLORIDA DEPARTMENT OF TRANSPORTATION, DESIGN STANDARDS DATED JANUARY 2006, AND OOCEA GENERAL AND TECHNICAL SPECIFICATIONS DATED AUGUST 2006, AS AMENDED BY CONTRACT DOCUMENTS.

REVISIONS

VOLUME 2 OF 2
APPROVED FOR CONSTRUCTION
MARCH 2007

LENGTH OF PROJECT

	LINEAR FT.	MILES
ROADWAY	5,689.07	1.078
BRIDGES	3,036.48	0.575
BRIDGE CULVERTS		
NET LENGTH OF PROJECT	8,725.55	1.653
EXCEPTIONS		
GROSS LENGTH OF PROJECT	8,725.55	1.653

OOCEA PROJECT MANAGER: JOSEPH A. BERENIS, P.E.
PBS&J PROJECT MANAGER: GLENN M. PRESSIMONE, P.E.

NOTE: THE SCALE OF THESE PLANS MAY HAVE CHANGED DUE TO REPRODUCTION.

ROADWAY PLANS APPROVED BY: RODGER P. SCHMIDT, P.E.
DATE:
P.E. NO.: 40234

REVISIONS					
DATE	BY	DESCRIPTION	DATE	BY	DESCRIPTION

RODGER P. SCHMIDT, P.E.
P.E. LICENSE NO. 40234
PARSONS
2420 LAKEMONT AVE., SUITE 450 ORLANDO, FL 32814
PHONE: (407) 702-6800 / FAX: (407) 702-6950
CERTIFICATE OF AUTHORIZATION NO. 1838

CONTRACT No. 414-211

EXPRESSWAY AUTHORITY

KEY SHEET

SHEET NO. 1

p0009983 3/30/2007 4:51:28 PM P:\646262\646262\roadway\keystd02.dgn

ORLANDO-ORANGE COUNTY EXPRESSWAY AUTHORITY

CONTRACT PLANS

STATE ROAD NUMBER 414

MAITLAND BOULEVARD EXTENSION

ORANGE COUNTY

OOCEA PROJECT NO. 414-211

STRUCTURE PLANS

INDEX OF STRUCTURE PLANS

GENERAL DRAWINGS
SHEET NO'S. B-1 THRU B-8

BRIDGE NO. 750704 - SR 414 OVER SPUR 1
SHEET NO'S. B1-1 THRU B1-28

BRIDGE NO. 750707 - SR 414 VIADUCT
SHEET NO'S. B2-1 THRU B2-188

BRIDGE NO. 750743 - SR 414 OVER SR 500 (US 441)
SHEET NO'S. B3-1 THRU B3-33

AESTHETIC ARCH - (SR 414 OVER SR 500/US 441)
SHEET NOS. A-1 THRU A-3

WALLS
SHEET NO'S. BW-1 THRU BW-50

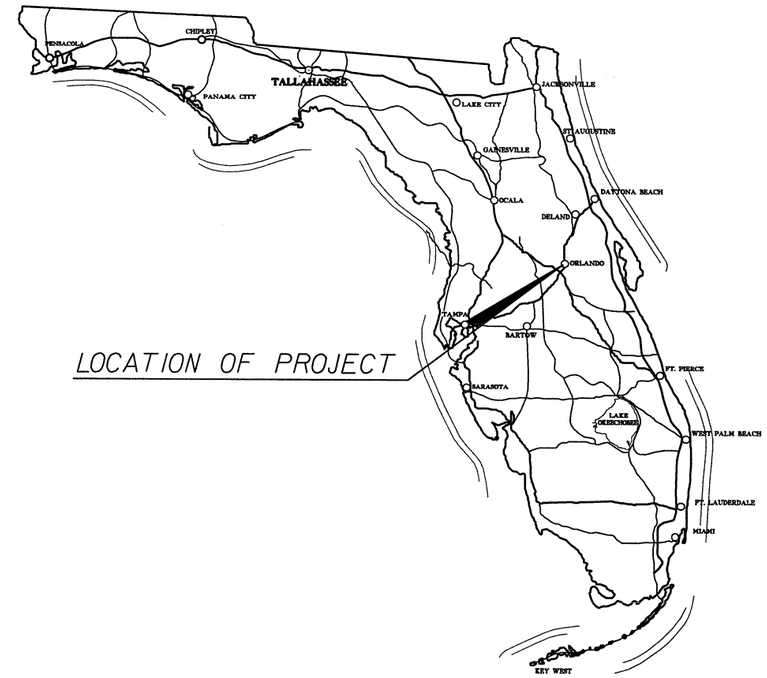

LOCATION OF PROJECT

STRUCTURE SHOP DRAWINGS
TO BE SUBMITTED TO:

THOMAS E. DAVIDSON, P.E.
2420 LAKEMONT AVENUE, SUITE 450
ORLANDO, FL 32814
(407) 702-6800

PLANS PREPARED BY:

PARSONS
2420 LAKEMONT AVE., Suite 450, ORLANDO, FL 32814
PHONE: (407) 702-6800
CERTIFICATE OF AUTHORIZATION NO. 1838

PLANS PREPARED FOR:
ORLANDO-ORANGE COUNTY EXPRESSWAY AUTHORITY

CHAIRMAN	ALLAN E. KEEN
VICE CHAIRMAN	ORLANDO L. EVORA
SECRETARY/TREASURER	ARTHUR J. LEE
EX-OFFICIO MEMBER	RICHARD T. CROTTY
EX-OFFICIO MEMBER	GEORGE GILHOOLEY, P.E.
EXECUTIVE DIRECTOR	MICHAEL SNYDER, P.E.

NOTE: THE SCALE OF THESE PLANS MAY HAVE CHANGED DUE TO REPRODUCTION.

REVISIONS

STRUCTURES PLANS APPROVED BY: THOMAS E. DAVIDSON, P.E.
DATE: _____
P.E. NO.: 47131

OOCEA PROJECT MANAGER: JOSEPH A. BERENIS, P.E.
PBS&J PROJECT MANAGER: GLENN M. PRESSIMONE, P.E.

REVISIONS

DATE	BY	DESCRIPTION	DATE	BY	DESCRIPTION

PARSONS
2420 LAKEMONT AVE., Ste 450, ORLANDO, FL 32814
PHONE: (407) 702-6800
CERTIFICATE OF AUTHORIZATION NO. 1838
THOMAS E. DAVIDSON, P.E. LIC. NO. 47131

CONTRACT No. 414-211

EXPRESSWAY AUTHORITY

KEY SHEET

SHEET NO. B-1

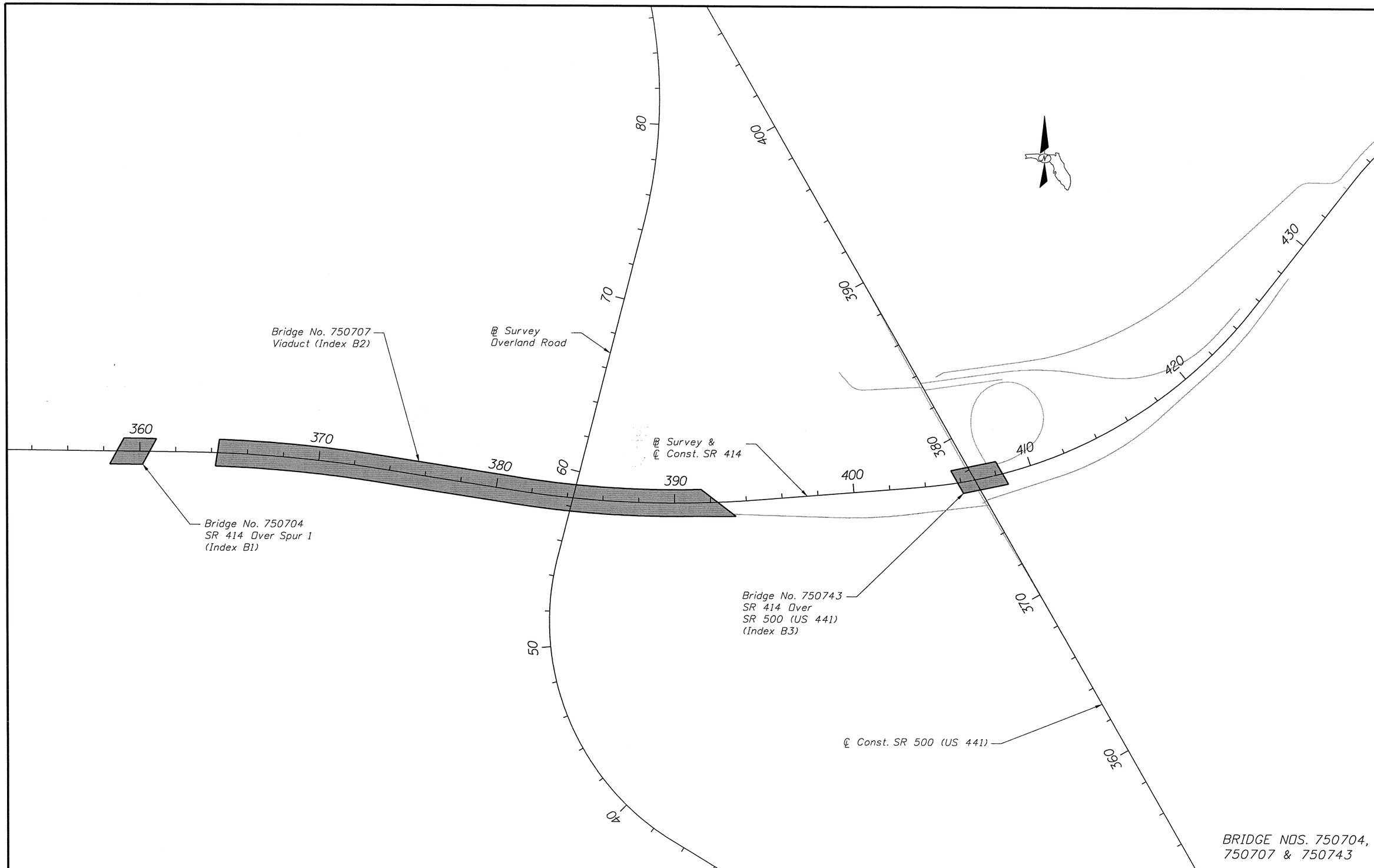

BRIDGE NOS. 750704, 750707 & 750743

REVISIONS

DATE	BY	DESCRIPTION	DATE	BY	DESCRIPTION

	NAMES	DATES
DRAWN BY	CJF	01-07
CHECKED BY	TED	01-07
DESIGNED BY	NJB	01-07
CHECKED BY	TED	01-07
APPROVED BY	T.E. Davidson P.E.	

ENGINEER OF RECORD:
PARSONS
2420 LAKEMONT AVE., SUITE 450, ORLANDO, FL 32814
PHONE: (407) 702-6800
CERTIFICATE OF AUTHORIZATION NO. 1838
THOMAS E. DAVIDSON, P.E. LIC. NO. 47131

EXPRESSWAY AUTHORITY

ROAD NO.	SR 414
COUNTY	ORANGE
FINANCIAL PROJECT ID	414-211

SHEET TITLE: BRIDGE LOCATION KEY SHEET

PROJECT NAME: MAITLAND BLVD. EXTENSION
SR 414 SECTION 211

SHEET NO. B-2

33259 3/30/2007 3:21:20 PM P:\646262\646262\struct\0Common_Shts\BKeySheet01.DGN

PARSONS

GENERAL DRAWINGS

SHEET NO.	DESCRIPTION
B-1	KEY SHEET
B-2	BRIDGE LOCATION KEY SHEET
B-3	INDEX OF DRAWINGS (1 OF 2)
B-4	INDEX OF DRAWINGS (2 OF 2)
B-5	GENERAL NOTES (1 OF 2)
B-6	GENERAL NOTES & DETAILS (2 OF 2)
B-7	SUMMARY OF BRIDGE PAY ITEMS AND PIPE HANGER DETAILS
B-8	APPROACH SLAB TABLE OF DIMENSIONS (FLEXIBLE)

BRIDGE NO. 750704
SR 414 OVER SPUR 1 (B1)

SHEET NO.	DESCRIPTION
B1-1	PLAN AND ELEVATION
B1-2	REPORT OF SPT BORINGS FOR STRUCTURES
B1-3	REPORT OF SPT BORINGS FOR STRUCTURES
B1-4	REPORT OF SPT BORINGS FOR STRUCTURES
B1-5	REPORT OF SPT BORINGS FOR STRUCTURES
B1-6	REPORT OF SPT BORINGS FOR STRUCTURES
B1-7	REPORT OF SPT BORINGS FOR STRUCTURES
B1-8	FOUNDATION LAYOUT (1 OF 2)
B1-9	FOUNDATION LAYOUT (2 OF 2)
B1-10	END BENT 1 (1 OF 3)
B1-11	END BENT 1 (2 OF 3)
B1-12	END BENT 1 (3 OF 3)
B1-13	END BENT 2 (1 OF 3)
B1-14	END BENT 2 (2 OF 3)
B1-15	END BENT 2 (3 OF 3)
B1-16	END BENT DETAILS (1 OF 2)
B1-17	END BENT DETAILS (2 OF 2)
B1-18	FINISH GRADE ELEVATION (1 OF 2)
B1-19	FINISH GRADE ELEVATION (2 OF 2)
B1-20	SUPERSTRUCTURE PLAN (1 OF 2)
B1-21	SUPERSTRUCTURE PLAN (2 OF 2)
B1-22	SUPERSTRUCTURE SECTION (1 OF 2)
B1-23	SUPERSTRUCTURE SECTION (2 OF 2)
B1-24	SUPERSTRUCTURE DETAILS (1 OF 2)
B1-25	SUPERSTRUCTURE DETAILS (2 OF 2)
B1-26	TYPE IV BEAM TABLE OF VARIABLES
B1-27	REINFORCING BAR LIST
B1-28	LRFR - BRIDGE LOAD RATING SUMMARY

BRIDGE NO. 750707
SR 414 VIADUCT (B2)

SHEET NO.	DESCRIPTION
B2-1	PLAN & ELEVATION (1 OF 4)
B2-2	PLAN & ELEVATION (2 OF 4)
B2-3	PLAN & ELEVATION (3 OF 4)
B2-4	PLAN & ELEVATION (4 OF 4)
B2-5	PLAN VIEW WITH BORING LOCATIONS
B2-6	REPORT OF SPT BORINGS FOR STRUCTURES
B2-7	REPORT OF SPT BORINGS FOR STRUCTURES
B2-8	REPORT OF SPT BORINGS FOR STRUCTURES
B2-9	REPORT OF SPT BORINGS FOR STRUCTURES
B2-10	REPORT OF SPT BORINGS FOR STRUCTURES
B2-11	REPORT OF SPT BORINGS FOR STRUCTURES
B2-12	REPORT OF SPT BORINGS FOR STRUCTURES
B2-13	REPORT OF SPT BORINGS FOR STRUCTURES
B2-14	REPORT OF SPT BORINGS FOR STRUCTURES
B2-15	REPORT OF SPT BORINGS FOR STRUCTURES
B2-16	REPORT OF SPT BORINGS FOR STRUCTURES
B2-17	REPORT OF SPT BORINGS
B2-18	REPORT OF SPT BORINGS
B2-19	REPORT OF SPT BORINGS
B2-20	REPORT OF SPT BORINGS
B2-21	REPORT OF SPT BORINGS
B2-22	REPORT OF SPT BORINGS
B2-23	REPORT OF SPT BORINGS
B2-24	REPORT OF SPT BORINGS
B2-25	RESERVED FOR FUTURE USE
B2-26	RESERVED FOR FUTURE USE
B2-27	FOUNDATION LAYOUT (SHEET 1 OF 7)
B2-28	FOUNDATION LAYOUT (SHEET 2 OF 7)
B2-29	FOUNDATION LAYOUT (SHEET 3 OF 7)
B2-30	FOUNDATION LAYOUT (SHEET 4 OF 7)
B2-31	FOUNDATION LAYOUT (SHEET 5 OF 7)
B2-32	FOUNDATION LAYOUT (SHEET 6 OF 7)
B2-33	FOUNDATION LAYOUT (SHEET 7 OF 7)
B2-34	END BENT 1 (1OF 2)
B2-35	END BENT 1 (2 OF 2)
B2-36	END BENT 21 (1 OF 3)
B2-37	END BENT 21 (2 OF 3)
B2-38	END BENT 21 (3 OF 3)
B2-39	END BENT DETAILS (1 OF 4)
B2-40	END BENT DETAILS (2 OF 4)
B2-41	END BENT DETAILS (3 OF 4)
B2-42	END BENT DETAILS (4 OF 4)
B2-43	PIERS 2, 8-11 & 13-17 (SHEET 1 OF 7)
B2-44	PIERS 2, 8-11 & 13-17 (SHEET 2 OF 7)
B2-45	PIERS 2, 8-11 & 13-17 (SHEET 3 OF 7)
B2-46	PIERS 2, 8-11 & 13-17 (SHEET 4 OF 7)
B2-47	PIERS 2, 8-11 & 13-17 (SHEET 5 OF 7)
B2-48	PIERS 2, 8-11 & 13-17 (SHEET 6 OF 7)
B2-49	PIERS 2, 8-11 & 13-17 (SHEET 7 OF 7)
B2-50	PIERS 2, 8-11 & 13-17 DETAILS (SHEET 1 OF 3)
B2-51	PIERS 2, 8-11 & 13-17 DETAILS (SHEET 2 OF 3)
B2-52	PIERS 2, 8-11 & 13-17 DETAILS (SHEET 3 OF 3)
B2-53	PIERS 3 & 7 (SHEET 1 OF 4)
B2-54	PIERS 3 & 7 (SHEET 2 OF 4)
B2-55	PIERS 3 & 7 (SHEET 3 OF 4)
B2-56	PIERS 3 & 7 (SHEET 4 OF 4)
B2-57	PIERS 3 & 7 - DETAILS
B2-58	PIER 4 (SHEET 1 OF 5)
B2-59	PIER 4 (SHEET 2 OF 5)
B2-60	PIER 4 (SHEET 3 OF 5)
B2-61	PIER 4 (SHEET 4 OF 5)
B2-62	PIER 4 (SHEET 5 OF 5)
B2-63	PIER 4 - DETAILS
B2-64	PIER 5 (SHEET 1 OF 6)
B2-65	PIER 5 (SHEET 2 OF 6)
B2-66	PIER 5 (SHEET 3 OF 6)
B2-67	PIER 5 (SHEET 4 OF 6)
B2-68	PIER 5 (SHEET 5 OF 6)
B2-69	PIER 5 (SHEET 6 OF 6)
B2-70	PIER 5 - DETAILS (SHEET 1 of 2)
B2-71	PIER 5 - DETAILS (SHEET 2 of 2)
B2-72	PIER 6 (SHEET 1 OF 5)
B2-73	PIER 6 (SHEET 2 OF 5)
B2-74	PIER 6 (SHEET 3 OF 5)
B2-75	PIER 6 (SHEET 4 OF 5)
B2-76	PIER 6 (SHEET 5 OF 5)
B2-77	PIER 6 - DETAILS
B2-78	PIER 12 (SHEET 1 OF 3)
B2-79	PIER 12 (SHEET 2 OF 3)
B2-80	PIER 12 (SHEET 3 OF 3)
B2-81	PIER 12 - DETAILS
B2-82	PIER 18 RIGHT (SHEET 1 OF 2)
B2-83	PIER 18 RIGHT (SHEET 2 OF 2)
B2-84	PIER 18 LEFT & 19 RIGHT (SHEET 1 OF 3)
B2-85	PIERS 18 LEFT & 19 RIGHT (SHEET 2 OF 3)
B2-86	PIERS 18 LEFT & 19 RIGHT (SHEET 3 OF 3)
B2-87	PIER 20 (SHEET 1 OF 2)
B2-88	PIER 20 (SHEET 2 OF 2)
B2-89	PIERS 18, 19 & 20 PEDESTAL ELEVATIONS
B2-90	FINISH GRADE ELEVATIONS (1 OF 25)
B2-91	FINISH GRADE ELEVATIONS (2 OF 25)
B2-92	FINISH GRADE ELEVATIONS (3 OF 25)
B2-93	FINISH GRADE ELEVATIONS (4 OF 25)
B2-94	FINISH GRADE ELEVATIONS (5 OF 25)
B2-95	FINISH GRADE ELEVATIONS (6 OF 25)
B2-96	FINISH GRADE ELEVATIONS (7 OF 25)
B2-97	FINISH GRADE ELEVATIONS (8 OF 25)
B2-98	FINISH GRADE ELEVATIONS (9 OF 25)
B2-99	FINISH GRADE ELEVATIONS (10 OF 25)
B2-100	FINISH GRADE ELEVATIONS (11 OF 25)
B2-101	FINISH GRADE ELEVATIONS (12 OF 25)
B2-102	FINISH GRADE ELEVATIONS (13 OF 25)
B2-103	FINISH GRADE ELEVATIONS (14 OF 25)
B2-104	FINISH GRADE ELEVATIONS (15 OF 25)
B2-105	FINISH GRADE ELEVATIONS (16 OF 25)
B2-106	FINISH GRADE ELEVATIONS (17 OF 25)
B2-107	FINISH GRADE ELEVATIONS (18 OF 25)
B2-108	FINISH GRADE ELEVATIONS (19 OF 25)
B2-109	FINISH GRADE ELEVATIONS (20 OF 25)
B2-110	FINISH GRADE ELEVATIONS (21 OF 25)
B2-111	FINISH GRADE ELEVATIONS (22 OF 25)
B2-112	FINISH GRADE ELEVATIONS (23 OF 25)
B2-113	FINISH GRADE ELEVATIONS (24 OF 25)
B2-114	FINISH GRADE ELEVATIONS (25 OF 25)
B2-115	SUPERSTRUCTURE PLAN - SPAN 1
B2-116	SUPERSTRUCTURE PLAN - SPAN 2
B2-117	SUPERSTRUCTURE PLAN - SPAN 3
B2-118	SUPERSTRUCTURE PLAN - SPAN 4
B2-119	SUPERSTRUCTURE PLAN - SPAN 5
B2-120	SUPERSTRUCTURE PLAN - SPAN 6
B2-121	SUPERSTRUCTURE PLAN - SPAN 7
B2-122	SUPERSTRUCTURE PLAN - SPAN 8
B2-123	SUPERSTRUCTURE PLAN - SPAN 9
B2-124	SUPERSTRUCTURE PLAN - SPAN 10
B2-125	SUPERSTRUCTURE PLAN - SPAN 11
B2-126	SUPERSTRUCTURE PLAN - SPAN 12
B2-127	SUPERSTRUCTURE PLAN - SPAN 13
B2-128	SUPERSTRUCTURE PLAN - SPAN 14
B2-129	SUPERSTRUCTURE PLAN - SPAN 15
B2-130	SUPERSTRUCTURE PLAN - SPAN 16
B2-131	SUPERSTRUCTURE PLAN - SPAN 17 LEFT
B2-132	SUPERSTRUCTURE PLAN - SPAN 17 RIGHT
B2-133	SUPERSTRUCTURE PLAN - SPAN 18 LEFT (SHEET 1 OF 2)
B2-134	SUPERSTRUCTURE PLAN - SPAN 18 LEFT (SHEET 2 OF 2)
B2-135	SUPERSTRUCTURE PLAN - SPAN 18 RIGHT
B2-136	SUPERSTRUCTURE PLAN - SPAN 19 RIGHT (SHEET 1 OF 2)
B2-137	SUPERSTRUCTURE PLAN - SPAN 19 RIGHT (SHEET 2 OF 2)
B2-138	SUPERSTRUCTURE PLAN - SPAN 20 (SHEET 1 OF 2)
B2-139	SUPERSTRUCTURE PLAN - SPAN 20 (SHEET 2 OF 2)
B2-140	SUPERSTRUCTURE SECTION SPAN 1 (1 OF 2)
B2-141	SUPERSTRUCTURE SECTION SPAN 1 (2 OF 2)
B2-142	SUPERSTRUCTURE SECTION SPAN 2 (1 OF 2)
B2-143	SUPERSTRUCTURE SECTION SPAN 2 (2 OF 2)
B2-144	SUPERSTRUCTURE SECTION SPANS 3 THRU 7 (1 OF 2)
B2-145	SUPERSTRUCTURE SECTION SPANS 3 THRU 7 (2 OF 2)
B2-146	SUPERSTRUCTURE SECTION SPANS 8 & 9 (1 OF 2)
B2-147	SUPERSTRUCTURE SECTION SPANS 8 & 9 (2 OF 2)
B2-148	SUPERSTRUCTURE SECTION SPANS 10-13, 15 & 16 (1 OF 2)
B2-149	SUPERSTRUCTURE SECTION SPANS 10-13, 15 & 16 (2 OF 2)
B2-150	SUPERSTRUCTURE SECTION SPAN 14 (1 OF 2)
B2-151	SUPERSTRUCTURE SECTION SPAN 14 (2 OF 2)
B2-152	SUPERSTRUCTURE SECTION (SPANS 17 & 18 LEFT AND SPANS 17 THRU 19 RIGHT) (1 OF 4)
B2-153	SUPERSTRUCTURE SECTION (SPANS 17 & 18 LEFT AND SPANS 17 THRU 19 RIGHT) (2 OF 4)
B2-154	SUPERSTRUCTURE SECTION (SPANS 17 & 18 LEFT AND SPANS 17 THRU 19 RIGHT) (3 OF 4)
B2-155	SUPERSTRUCTURE SECTION (SPANS 17 & 18 LEFT AND SPANS 17 THRU 19 RIGHT) (4 OF 4)
B2-156	SUPERSTRUCTURE SECTION SPAN 20 (1 OF 2)
B2-157	SUPERSTRUCTURE SECTION SPAN 20 (2 OF 2)
B2-158	SUPERSTRUCTURE DETAILS (1 OF 8)
B2-159	SUPERSTRUCTURE DETAILS (2 OF 8)
B2-160	SUPERSTRUCTURE DETAILS (3 OF 8)
B2-161	SUPERSTRUCTURE DETAILS (4 OF 8)
B2-162	SUPERSTRUCTURE DETAILS (5 OF 8)
B2-163	SUPERSTRUCTURE DETAILS (6 OF 8)
B2-164	SUPERSTRUCTURE DETAILS (7 OF 8)
B2-165	SUPERSTRUCTURE DETAILS (8 OF 8)
B2-166	TYPE IV BEAM TABLE OF VARIABLES (1 OF 2)
B2-167	TYPE IV BEAM TABLE OF VARIABLES (2 OF 2)
B2-168	TYPE VI BEAM TABLE OF VARIABLES
B2-169	BULB-T 78 BEAM TABLE OF VARIABLES (1 OF 2)
B2-170	BULB-T 78 BEAM TABLE OF VARIABLES (2 OF 2)
B2-171	MODIFIED INDEX 5210 (1 OF 3)
B2-172	MODIFIED INDEX 5210 (2 OF 3)
B2-173	MODIFIED INDEX 5210 (3 OF 3)
B2-174	DRAINAGE DETAILS (1 OF 2)
B2-175	DRAINAGE DETAILS (2 OF 2)
B2-176	ADDITIONAL BAR BENDING DETAILS
B2-177	REINFORCING BAR LIST SUPERSTRUCTURE (1 OF 5)
B2-178	REINFORCING BAR LIST SUPERSTRUCTURE (2 OF 5)
B2-179	REINFORCING BAR LIST SUPERSTRUCTURE (3 OF 5)
B2-180	REINFORCING BAR LIST SUPERSTRUCTURE (4 OF 5)
B2-181	REINFORCING BAR LIST SUPERSTRUCTURE (5 OF 5)
B2-182	REINFORCING BAR LIST
B2-183	REINFORCING BAR LIST - SUBSTRUCTURE (1 OF 6)
B2-184	REINFORCING BAR LIST - SUBSTRUCTURE (2 OF 6)
B2-185	REINFORCING BAR LIST - SUBSTRUCTURE (3 OF 6)
B2-186	REINFORCING BAR LIST - SUBSTRUCTURE (4 OF 6)
B2-187	REINFORCING BAR LIST - SUBSTRUCTURE (5 OF 6)
B2-188	REINFORCING BAR LIST - SUBSTRUCTURE (6 OF 6)

BRIDGE NOS. 750704, 750707 & 750743

REVISIONS

DATE	BY	DESCRIPTION	DATE	BY	DESCRIPTION

	NAMES	DATES
DRAWN BY	CJF	01-07
CHECKED BY	TED	01-07
DESIGNED BY	CJF	01-07
CHECKED BY	TED	01-07
APPROVED BY	T.E. Davidson P.E.	

ENGINEER OF RECORD:
PARSONS
2420 LAKEMONT AVE., SUITE 450, ORLANDO, FL 32814
PHONE: (407) 702-6800
CERTIFICATE OF AUTHORIZATION NO. 1838
THOMAS E. DAVIDSON, P.E. LIC. NO. 47131

EXPRESSWAY AUTHORITY

ROAD NO.	SR 414
COUNTY	ORANGE
FINANCIAL PROJECT ID	414-211

SHEET TITLE: INDEX OF DRAWINGS (1 OF 2)

PROJECT NAME: MAITLAND BLVD. EXTENSION
SR 414 SECTION 211

SHEET NO. B-3

PARSONS

BRIDGE NO. 750743
SR 414 OVER SR 500 (US 441) (B3)

SHEET NO.	DESCRIPTION
B3-1	PLAN AND ELEVATION
B3-2	REPORT OF SPT BORINGS FOR STRUCTURES
B3-3	REPORT OF SPT BORINGS FOR STRUCTURES
B3-4	REPORT OF SPT BORINGS FOR STRUCTURES
B3-5	REPORT OF SPT BORINGS FOR STRUCTURES
B3-6	REPORT OF SPT BORINGS FOR STRUCTURES
B3-7	REPORT OF SPT BORINGS FOR STRUCTURES
B3-8	FOUNDATION LAYOUT (1 OF 2)
B3-9	FOUNDATION LAYOUT (2 OF 2)
B3-10	END BENT 1 (1 OF 2)
B3-11	END BENT 1 (2 OF 2)
B3-12	END BENT 2 (1 OF 2)
B3-13	END BENT 2 (2 OF 2)
B3-14	END BENT DETAILS (1 OF 2)
B3-15	END BENT DETAILS (2 OF 2)
B3-16	FINISH GRADE ELEVATION (1 OF 2)
B3-17	FINISH GRADE ELEVATION (2 OF 2)
B3-18	SUPERSTRUCTURE PLAN (1 OF 2)
B3-19	SUPERSTRUCTURE PLAN (2 OF 2)
B3-20	SUPERSTRUCTURE SECTION (1 OF 2)
B3-21	SUPERSTRUCTURE SECTION (2 OF 2)
B3-22	SUPERSTRUCTURE DETAILS (1 OF 2)
B3-23	SUPERSTRUCTURE DETAILS (2 OF 2)
B3-24	HEAVY TRUCK TRAFFIC RAILING BARRIER DETAILS (1 OF 2)
B3-25	HEAVY TRUCK TRAFFIC RAILING BARRIER DETAILS (2 OF 2)
B3-26	FRAMING PLAN & GIRDER ELEVATION
B3-27	FRAMING DETAILS
B3-28	BOLTED FIELD SPLICE
B3-29	CAMBER DIAGRAM
B3-30	CROSS FRAME DETAILS (1 OF 2)
B3-31	CROSS FRAME DETAILS (2 OF 2)
B3-32	REINFORCING BAR LIST
B3-33	LRFR - BRIDGE LOAD RATING SUMMARY

WALLS

SHEET NO.	DESCRIPTION
BW-1	RETAINING WALL LOCATION KEY SHEET
BW-2	RETAINING WALL SYSTEM DATA TABLES (PERMANENT) AND GENERAL NOTES
BW-3	MSE RETAINING WALL DETAILS
BW-4	WALL AESTHETICS
BW-5	RETAINING WALL 1
BW-6	RETAINING WALL 2
BW-7	RETAINING WALL 3
BW-8	RETAINING WALL 4
BW-9	RETAINING WALL 5 (1 OF 2)
BW-10	RETAINING WALL 5 (2 OF 2)
BW-11	RETAINING WALL 6
BW-12	RETAINING WALL 7
BW-13	RETAINING WALL 8 (1 OF 2)
BW-14	RETAINING WALL 8 (2 OF 2)
BW-15	RETAINING WALL 9 (1 OF 2)
BW-16	RETAINING WALL 9 (2 OF 2)
BW-17	RETAINING WALL 10
BW-18	RETAINING WALL 11 (1 OF 2)
BW-19	RETAINING WALL 11 (2 OF 2)
BW-20	RETAINING WALL 12
BW-21	RETAINING WALL 13
BW-22	RETAINING WALL 14
BW-23	RETAINING WALL 15 (1 OF 2)
BW-24	RETAINING WALL 15 (2 OF 2)
BW-25	CANTILEVER STEEL SHEET PILE RETAINING WALL DETAILS (1 OF 2)
BW-26	CANTILEVER STEEL SHEET PILE RETAINING WALL DETAILS (2 OF 2)
BW-27	RETAINING WALL 16
BW-28	RETAINING WALL 18
BW-29	RETAINING WALL 19 (1 OF 2)
BW-30	RETAINING WALL 19 (2 OF 2)
BW-31	C.I.P. RETAINING WALL SYSTEM DATA TABLES (PERMANENT)
BW-32	RETAINING WALL 17
BW-33	RETAINING WALL SYSTEM DATA TABLES (TEMP)
BW-34	TEMPORARY WALL 1 (1 OF 3)
BW-35	TEMPORARY WALL 1 (2 OF 3)
BW-36	TEMPORARY WALL 1 (3 OF 3)
BW-37	TEMPORARY WALL 2 (1 OF 2)
BW-38	TEMPORARY WALL 2 (2 OF 2)
BW-39	REPORT OF SPT BORINGS - HIGH FILLS & WALLS
BW-40	REPORT OF SPT BORINGS - HIGH FILLS & WALLS
BW-41	REPORT OF SPT BORINGS - HIGH FILLS & WALLS
BW-42	REPORT OF SPT BORINGS - HIGH FILLS & WALLS
BW-43	REPORT OF SPT BORINGS - HIGH FILLS & WALLS
BW-44	REPORT OF SPT BORINGS - HIGH FILLS & WALLS
BW-45	REPORT OF SPT BORINGS - HIGH FILLS & WALLS
BW-46	REPORT OF SPT BORINGS - HIGH FILLS & WALLS
BW-47	REPORT OF SPT BORINGS - HIGH FILLS & WALLS
BW-48	REPORT OF SPT BORINGS - HIGH FILLS & WALLS
BW-49	REPORT OF SPT BORINGS - HIGH FILLS & WALLS
BW-50	REPORT OF SPT BORINGS - HIGH FILLS & WALLS

AESTHETIC ARCH
(SR 414 OVER SR 500/US 441)

SHEET NO.	DESCRIPTION
A-1	ARCH DETAILS (1 OF 3)
A-2	ARCH DETAILS (2 OF 3)
A-3	ARCH DETAILS (3 OF 3)

BRIDGE NOS. 750704, 750707 & 750743

REVISIONS

DATE	BY	DESCRIPTION	DATE	BY	DESCRIPTION

	NAMES	DATES
DRAWN BY	CJF	01-07
CHECKED BY	TED	01-07
DESIGNED BY	CJF	01-07
CHECKED BY	TED	01-07
APPROVED BY	T.E. Davidson P.E.	

ENGINEER OF RECORD:
PARSONS
2420 LAKEMONT AVE., SUITE 450, ORLANDO, FL 32814
PHONE: (407) 702-6800
CERTIFICATE OF AUTHORIZATION NO. 1838
THOMAS E. DAVIDSON, P.E. LIC. NO. 47131

EXPRESSWAY AUTHORITY

ROAD NO.	SR 414
COUNTY	ORANGE
FINANCIAL PROJECT ID	414-211

SHEET TITLE: INDEX OF DRAWINGS (2 OF 2)

PROJECT NAME: MAITLAND BLVD. EXTENSION SR 414 SECTION 211

SHEET NO. B-4

GENERAL NOTES

A. SPECIFICATIONS

1. GENERAL: The General and Technical Specifications (OOCEA) and Supplement and/or Amendments thereto.
2. DESIGN:
   a) AASHTO LRFD Bridge Design Specifications, (2004) Third Edition and 2005 & 2006 Interims as specified in the FDOT Structures Design Guidelines.
   b) FDOT Structures Manual Topic No. 625-020-154-b (html web based manual) (July 2006).
   c) F.D.O.T. Plans Preparation Manual (January, 2006).
   d) FDOT Design Standards (2006) and Interims.

B. DESIGN LOADINGS

1. DEAD LOADS:
   a) Unit Weight of Reinforced Concrete: 150 PCF
   b) Traffic Railing Barrier w/ Soundwall: 1008 PLF (SDG); Median Barrier : 486 PLF; Heavy Truck Barrier: 486 PLF; Traffic Railing Barrier: 421 PLF; Steel Railing: 30 PLF.
   c) Stay in Place Metal Forms: Design includes an allowance of 20 PSF over the Projected Plan Area of the Metal Forms for the Unit Weight of the Forms and Concrete required to fill the Form Flutes. Stay in Place Metal Forms shall not be used for Cantilever Portions of the Decks.
2. LIVE LOADS:
   a) HL - 93 Loading
3. WIND LOADS:
   Basic Wind: In Accordance with AASHTO and Structures Design Guidelines, Chap. 2.
4. THERMAL FORCES:

a) Seasonal Variation for Design:	Concrete	Concrete DEck or Steel Girder
Temp. Rise:	+35°F	+40°F
Temp. Fall:	-35°F	-40°F
Normal Temperature:	70°F	70°F

   b) Thermal Coefficient = 0.000006 per Degree F (Concrete), 0.0000065 Degree F (Steel)
   c) For Joint Construction at Temperatures other than 70° F, adjust seal opening according to the Temperature adjustments. For Temperatures above 70° F diminish opening and for Temperatures below 70° F increase opening.
5. SEISMIC:
   In Accordance with AASHTO and Structures Design Guidelines (SDG) 2.3.
6. VEHICLE COLLISION LOAD:
   New Pier Columns have been designed for 400 kip Vehicle Collision Load.

C. MATERIALS

1. CONCRETE:
   Concrete shall be in accordance with Florida Department of Transportation Specification Section 346.

Class of Concrete	Minimum 28-Day Compressive Strength (psi)	Location of Concrete in Structure
II	f'c = 3,400	CIP Concrete - Traffic Railing Barrier
II (Bridge Deck)	f'c = 4,500	CIP Concrete Bridge Deck, Diaphragms and Approach Slabs
IV	f'c = 5,500	CIP Concrete - Substructure
V (Special)	f'c = 6,000	Prestressed Piles
VI	f'c = 8,500	Prestressed Beams

   a) Provide ¾" Chamfer on All Exposed Edges, Unless Otherwise Noted.
   b) Construction Joints will be permitted only at locations shown on Plans. Additional Construction Joints, or alternate locations to those shown, shall require Written Approval by the Engineer.
2. REINFORCING STEEL:
   a) All Reinforcing Steel shall be ASTM A615, Grade 60
   b) All Dimensions pertaining to the location of Reinforcing are to the Centerline of Bar except where the Clear Dimension is shown to Face of Concrete.
   c) Reinforcement Detail Dimensions are out to out of Bars. See Design Standards for additional Details.
   d) Reinforcing Bars required to be Field Cut/Adjusted, shall be incidental to the Unit Cost of Reinforcing Steel.
   e) Welded Wire Fabric (WWF) shall conform to ASTM A497.
   f) Bar Couplers shall be on the FDOT QPL List.
3. PRESTRESSING STRANDS:
   Prestressing Strands used for Precast Beams shall be 270KSI, Low Relaxation, ½" dia. Special Strands, or 6/10" dia. Strands. Strand used for Precast Piles shall be in accordance with Design Standard 20618.

D. CONCRETE COVER

1. Concrete Covers Shall Be:

	SR 414 Over Spur 1 & SR 414 Over SR 500 (US 441)	SR 414 Viaduct
- Superstructure (CIP)(Except as Noted):	2"	2"
- Top Deck Surfaces:	2½"	2½"
- Substructure (CIP):		
- External Surfaces Cast Against Earth:	4"	4½" (Unless Noted Otherwise)
- For Other External Surfaces:	3"	4" (Unless Noted Otherwise)
- Inverted Tee Caps	N/A	2"
- Top of Pedestal:	2"	2"

2. Concrete Cover shown in the Plans does not include Reinforcement Placement and Fabrication Tolerances unless shown as "Minimum Cover". See FDOT Standard Specifications for Allowable Reinforcement Placement Tolerances.

E. DESIGN METHOD

Load and Resistance Factor Design method (LRFD)

F. FOUNDATION

1. All Foundation Elements and Procedures shall be in accordance with Section 455 of the Specifications.
2. Piles within the MSE Wall Volume shall be driven prior to the construction of MSE Walls. The portion of the Piles within the Wall Volume shall be wrapped with Polyethylene Sheeting above Existing Grade in accordance with Specification Section 459.
3. For Normal Bearing Resistances and further information, see the Foundation Layout Sheets.
4. Steel H-piles may be spliced as necessary. Contractor shall submit splice details to the Engineer for Review and Approval. Cost of splicing piles shall be included in the bid item for piles.

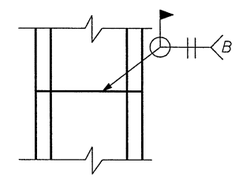

PILE SPLICE DETAIL

G. BRIDGE DECK GROOVING AND SCREEDING

1. The Riding Surface of Bridge Deck shall be Screeded to Finished Grade Elevations. The Contractor shall account for Theoretical Deflections due to self weight, Deck Casting Sequence, Deck Forming Systems, Construction Loads, Overlays and Temporary Shoring, etc. as required.
2. All Concrete Roadway Riding Surfaces of Bridge Deck and Approach Slabs shall be Grooved in accordance with Section 400-15.2.5 of the Specifications.

H. ENVIRONMENTAL CLASSIFICATION

Superstructure: Slightly Aggressive for all Bridge Locations
Substructure:
- Spur 1 - Moderately Aggressive (Concrete & Steel) (PH 6.4)
- Viaduct - Buried Substructure Elements
  - Steel: Slightly Aggressive
  - Concrete: Slightly Aggressive
  - Exposed Substructure Elements
    - Steel: Extremely Aggressive (Soil PH = 4.4)
    - Concrete: Extremely Aggressive (Soil PH = 4.4)
- US 441 - Buried Substructure Elements
  - Steel: Slightly Aggressive
  - Concrete: Slightly Aggressive
  - Exposed Substructure Elements
    - Steel: Extremely Aggressive (Soil PH = 5.6)
    - Concrete: Moderately Aggressive (Soil PH = 5.6)

I. UTILITIES

1. The Utilities shown in the Bridge Plans are at Approximate Locations. For additional Information, refer to the Utilities Plans.
2. Contractor shall Notify all involved Utility Companies to verify exact locations prior to Start of Construction.
3. Contractor shall assure that any Existing Utilities are not endangered or disturbed during Construction, and that Active Utilities are properly Maintained within the Construction Limits.

BRIDGE NOS. 750704, 750707 & 750743

REVISIONS

DATE	BY	DESCRIPTION	DATE	BY	DESCRIPTION

	NAMES	DATES
DRAWN BY	CAL	01-07
CHECKED BY	TED	01-07
DESIGNED BY	NJB	01-07
CHECKED BY	TED	01-07
APPROVED BY	T.E. Davidson P.E.	

ENGINEER OF RECORD:
PARSONS
2420 LAKEMONT AVE., SUITE 450, ORLANDO, FL 32814
PHONE: (407) 702-6800
CERTIFICATE OF AUTHORIZATION NO. 1838
THOMAS E. DAVIDSON, P.E. LIC. NO. 47131

EXPRESSWAY AUTHORITY

ROAD NO.	SR 414
COUNTY	ORANGE
FINANCIAL PROJECT ID	414-211

SHEET TITLE: GENERAL NOTES (1 OF 2)

PROJECT NAME: MAITLAND BLVD. EXTENSION SR 414 SECTION 211

SHEET NO. B-5

PARSONS

GENERAL NOTES (Continued)

J. MAINTENANCE OF TRAFFIC
See Roadway Plans For Traffic Control Plans.

K. CONSTRUCTION OVER TRAFFIC
The following Construction Activities shall not be allowed over Traffic:
1. Girder Placement.
2. Deck form placement and removal.
3. Concrete Deck placement.

L. SURFACE FINISH (See Details this Sheet and Wall Aesthetics Sheet)
1. Finish Coating:
   a) Finish Coatings and Color Shall be Applied to the Elements indicated in the Surface Finish Details on this sheet and on Wall Aesthetics Sheet.
   b) Costs of Finish Coatings shall be incidental to the item coated.
   c) Exposed faces of Pier Columns and Caps and End Bents (except tops of Caps and Bents) Shall Be Federal Standard 595B (July 1994) 33690 (Light Brown).
2. Applied Finish Coating for Retaining Walls and Traffic Railing Barriers shall be in accordance with Section 400-15 of OOCEA Technical Specifications.
3. Applied Finish Coating Color shall be in compliance with Section 400-15.2.6.6 or as specified herein.
4. Includes cleaning concrete surfaces in accordance with OOCEA Technical Specifications Section 400 and applying two pigmented layers of coating. The two pigmented layers of coating shall consist of one applied pigmented Class 5 Finish coating (TEXT COTE-X-70 BRIDGE COTE as manufactured by Textured Coatings of America, Inc.) and one applied pigmented coat of Anti-Graffiti coating (TEXT COTE-TY-COTE as manufactured by Textured Coating of America Inc.). Applied coating thickness and cure time shall be as recommended by the paint manufacturer.
5. All existing vegetation in/on existing surfaces shall be removed prior to painting and be kept removed in their entirely for the complete duration of Contract 414-211. Cost for removal shall be considered incidental to Price Bid for item having vegetation removed.
6. For all concrete coatings, the contractor shall submit manufacturer's samples Product Data Sheets of each color to be used, for review and approval. The manufacturers' sample shall be used as the 'standard' for comparison testing of all lots of coating shipped for this project. No coating will be accepted which has settled badly, gelled, or caked in the container as determined by the CEI. Any sediment that has occurred (in the container) during shipment shall be dispersed with paddle mixing. Containers that are not factory sealed and in good condition to prevent moisture contamination of the products shall be rejected.
7. Textured Coatings of America, Inc. has prepared specific in-house batch numbers for each of the colors used in this contract. The batch numbers for Expressway Authority Concrete Coating Projects are as follows:
   Dark Brown-Color 33446, Batch 40304-103
   Light Brown-Color 33690, Batch 40304-102
   Dark Green-Color 34227, Batch 40304-101
   All samples submitted for review shall match the in-house colors above.
   Light Gray-Color 36622, Batch n/a
8. After surface preparation of and before coating application to concrete surfaces test for the presence of capillary moisture utilizing ASTM D 4263, "Standard Test Method for indicating Moisture in Concrete by the Plastic Sheet Method" or other method approved by the Engineer. Do not apply coating if moisture is detected.

M. ELEVATION MARKERS
1. Note all Elevations are Per NAVD 1988.
2. Markers Recording the Elevation Shall Be Furnished and Installed by the Contractor in Accordance with Index 420.

N. BID ITEM NOTES
1. Payment for Incidental Items not specifically covered in the individual Bid Items shall be included in the Contract Unit Price for the Bid Items.
2. For Summary of Bridge Pay Items see Summary of Bridge Pay Items and Pipe Hanger Details Sheet.
3. For Traffic Control Bid Item Notes, see Roadway Plans.
4. Non-standard Composite Neoprene Bearing Pads shall be furnished by the Contractor, see individual Bridge Superstructure Detail Sheets. Bid Item No. 400-147 includes Quantities for Non-standard and Standard Pads.
5. Refer to Index No. 21210 for payment of Embedded Conduit in Barriers.
6. See Retaining Wall General Notes Sheet for additional Bid Item Notes.
7. The Cost of the Embedded Junction Boxes within the Bridge Deck Shall be included in The Cost of Class II Concrete (Superstructure).
8. The Cost of Silicone Joints shall be paid for under Item 458-1-11, Bridge Expansion Joint.
9. The Approach Slab Sheets are included with the Bridge Plans. All Quantities that are associated with the individual Approach Slabs are included with the Quantities for their respective Bridges.
10. The Cost of Soil Reinforcement and Fasteners for End Bents shall be included in the cost of the Retaining Wall System.

O. BARRIERS
Refer to Design Standards Index No. 490 for treatment of Skewed Traffic Railing, Parapets and Traffic Separators.

LEGEND
Color Code per Federal Standard 595B (7/1994)

(DB) Color 33446: Dark Brown	(DG) Color 34227: Dark Green
(LB) Color 33690: Light Brown	(LG) Color 36622: Light Gray

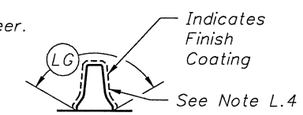

MEDIAN BARRIER SECTION

P. STRUCTURAL STEEL:
All Structural Steel shall be in accordance with ASTM A709, Grade 50.
1. CHARPY V-NOTCH: All ASTM A709 structural steel as designated on the plans, shall receive Charpy V-Notch testing in accordance with ASTM A709 and supplemental requirement S83 or S84 as noted below.
   a) Redundant members, as designated on the plans, shall be tested in accordance with Table S1.2 (Zone 1) of ASTM A709 (S83).
   b) Non-redundant members, as designated on the plans, shall be tested in accordance with Table S1.3 (Zone 1) of ASTM A709 (S84).
   All other structural steel shall meet the Charpy V-Notch test requirements specified in Specifications Section 962.
2. STEEL FABRICATION: Structural steel for girders and girder framing, diaphragms, cross bracing, etc., shall be ASTM A709. Fabrication shall be performed in accordance with the current applicable edition of the AASHTO/AWS D1.5 Bridge Welding Code. Fabricators of structural steel girders and girder framing shall have the AISC Quality Certification of Major Steel Bridges and AISC Fracture Critical Members endorsement.
3. WELDING:
   a) Welding details and operations shall be in accordance with the current edition of the AASHTO/AWS D1.5 Bridge Welding Code. Welding procedures shall be submitted and approved prior to welding on the project. Welds requiring non-destructive testing shall be radiographically inspected, except where the geometry of the region of the weld will not permit satisfactory information to be secured for verifications of the weld quality. When such geometrical conditions exist, other inspection procedures or combinations of procedures such as Ultrasonic Inspection, Dye Penetrant Inspection and/or Magnetic Particle Inspection, shall be used. Non-destructive Testing shall be performed as required by the current edition of the AASHTO/AWS D1.5 Bridge Welding Code.
   b) Field or Shop welding to any Structural Steel for the purpose of attaching erection hardware, or for anchoring conduits for lighting shall not be permitted. Proposed method of anchoring conduits/boxes for lighting shall be formally submitted to the Engineer for approval. Shear Connector Installation is governed by OSHA Steel Erection Rule.
   c) The following members are classified as ancillary members in accordance with the current edition of the AWS D1.5 Bridge Welding Code:
      - Expansion Joint Welds
      - Drainage System Welds
4. FRACTURE CRITICAL MEMBERS: See framing plans for designation of Fracture Critical Members. Structural components designated on the plans or in the special provisions as "Fracture Critical" shall conform to the provisions of Chapter 12 of the current AASHTO/AWS D1.5 Bridge Welding Code.
5. FIELD CONNECTIONS: All field connections shall be made with 7/8" diameter high strength slip critical type bolts in accordance with ASTM A325 unless otherwise shown.
6. PAINTING: All structural steel shall be painted with a three coat system consisting of an inorganic zinc primer, a polyamide epoxy intermediate coat, followed by an aliphatic urethane top coat that conforms in color to Federal Standard No. 595B Color Number 34227 (Dark Green). The painting shall be performed in accordance with Section 560 of the specifications. All steel surfaces painted in the shop shall be protected from surface contamination (e.g. oil, grease, chlorides etc.). If contamination is suspected and/or field application is not performed within 120 days of primer application, the surfaces shall be pressure cleaned in accordance with SSPC SP 12 (NV-1).
7. The Contractor shall maintain the stability of the Girders until the End Diaphragms and all Cross Frames have been securely connected.

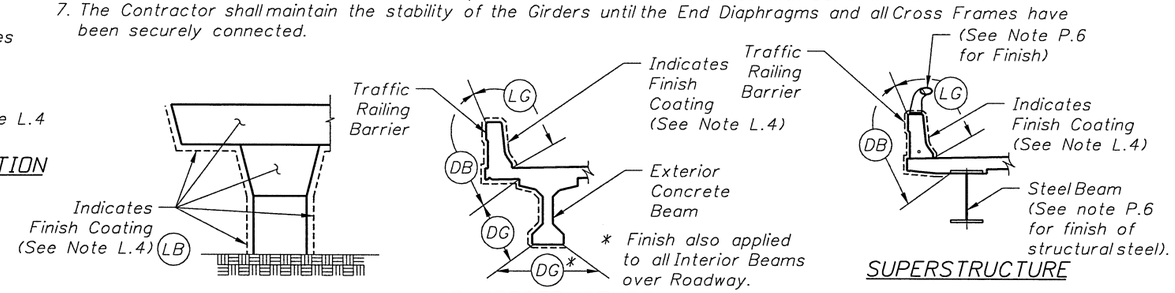

PIERS

SUPERSTRUCTURE

SUPERSTRUCTURE SURFACE FINISH DETAILS

Q. RAILROAD
1. Construction activities, including temporary shoring proposed for construction in railroad right-of-way, and Shoring for protection of the Railroad due to Foundation Construction shall conform to the CSXT Criteria for Overhead Bridges.
2. Temporary reductions in Vertical or Horizontal Clearance proposed by the Contractor for construction activities shall be coordinated with the Railroad Owner.

R. TEMPORARY SHORING FOR FOUNDATION CONSTRUCTION
1. It will be the Contractor's responsibility to provide a design and construct Shoring, as needed for protection of the Railroad from Foundation Construction, in accordance with the CSXT Criteria for Overhead Bridges and make Submittals to the Railroad as required by that document. Payment for Shoring for Railroad protection as needed for Foundation Construction shall be included in the Cost of the Substructure Concrete.
2. For protection of Existing Structures or Right of Way, it is the Contractor's responsibility to provide a Shoring Design and Construct Shoring as required by Section 455-1.1 of the Specifications and make Submittals as required by that Section. Payment for Shoring, as required for Foundation Construction, shall be included in the Cost of Substructure Concrete.

BRIDGE NOS. 750704, 750707 & 750743

REVISIONS

DATE	BY	DESCRIPTION	DATE	BY	DESCRIPTION

	NAMES	DATES
DRAWN BY	CAL	01-07
CHECKED BY	TED	01-07
DESIGNED BY	NJB	01-07
CHECKED BY	TED	01-07
APPROVED BY	T.E. Davidson P.E.	

ENGINEER OF RECORD:
PARSONS
2420 LAKEMONT AVE., SUITE 450, ORLANDO, FL 32814
PHONE: (407) 702-6800
CERTIFICATE OF AUTHORIZATION NO. 1838
THOMAS E. DAVIDSON, P.E. LIC. NO. 47131

EXPRESSWAY AUTHORITY

ROAD NO.	SR 414
COUNTY	ORANGE
FINANCIAL PROJECT ID	414-211

SHEET TITLE: GENERAL NOTES (2 OF 2)

PROJECT NAME: MAITLAND BLVD. EXTENSION SR 414 SECTION 211

SHEET NO. B-6

PARSONS

SUMMARY OF PAY ITEMS - BRIDGE

ITEM	DESCRIPTION	UNIT	SR 414 OVER SPUR I	VIADUCT	SR 414 OVER SR 500 (US 441)	Independent Walls	TOTALS
400-2-4	CLASS II CONCRETE (SUPERSTRUCTURE)	CY	498.1	13557.4	782.6	-	14838.1
400-2-10	CLASS II CONCRETE (APPROACH SLABS)	CY	367.0	441.9	323.0	-	1131.9
400-4-5	CLASS IV CONCRETE (SUBSTRUCTURE)	CY	210.2	518.9	243.0	-	972.1
400-4-25	CLASS IV CONCRETE (MASS)(SUBSTRUCTURE)	CY	-	14708.3	-	-	14708.3
400-4-11	CLASS IV CONCRETE (RETAINING WALL)	CY	-	-	-	413.5	413.5
400-9	BRIDGE DECK GROOVING AND PLANING - DECK THICKNESS 8.5" OR GREATER	SY	1830	43830	2891	-	48551
400-72	PRECAST BULKHEAD PANELS	SF	-	-	-	4059	4059
400-147	COMPOSITE NEOPRENE PADS	CF	13.0	289.2	11.0	-	313.2
415-1-3	REINFORCING STEEL (RETAINING WALL)	LB	-	-	-	46291	46291
415-1-4	REINFORCING STEEL (SUPERSTRUCTURE)	LB	114594	2202491	180969	-	2498054
415-1-5	REINFORCING STEEL (SUBSTRUCTURE)	LB	30824	4320910	32290	-	4384024
415-1-9	REINFORCING STEEL (APPROACH SLABS)	LB	70576	84806	62011	-	217393
450-1-3	PRESTRESSED BEAM (TYPE IV)	LF	2024	7045	-	-	9069
450-1-5	PRESTRESSED BEAM (TYPE VI)	LF	-	2652	-	-	2652
450-1-278	PRESTRESSED BEAM (BULB-T, 78", MODIFIED)	LF	-	38617	-	-	38617
455-18	PROTECTION OF EXISTING STRUCTURES	LS	1	1	1	1	1
455-34-3	PRESTRESSED CONCRETE PILING (18" SQ.)	LF	4732	5530	-	-	10262
455-34-5	PRESTRESSED CONCRETE PILING (24" SQ.)	LF	-	41630	-	-	41630
455-35-6	PILING, STEEL (HP 14x89)	LF	-	97303	8863	-	106166
455-133-3	SHEET PILING, STEEL (FURNISH & INSTALL PERMANENT)	SF	-	-	-	24879	24879
455-137	LOAD TEST -DYNAMIC	EA	2	22	2	-	26
455-143-3	TEST PILES -PRESTRESSED CONCRETE (18" SQ.)	LF	300	329	-	-	629
455-143-5	TEST PILES -PRESTRESSED CONCRETE (24" SQ.)	LF	-	1129	-	-	1129
455-144-6	TEST PILES, STEEL (HP 14x89)	LF	-	1560	250	-	1810
455-146	EMBEDDED DATA COLLECTOR	EA	2	11	-	-	13
458-1-11	BRIDGE DECK EXPANSION JOINT (NEW CONSTRUCTION F & I)	LF	329	2081	265	-	2675
459-71	POLYETHYLENE SHEETING ON CONCRETE PILES	SY	519	926	-	-	1445
460-2-2	STRUCTURAL STEEL - NEW/WIDENING (LOW ALLOY)	LS (LB)	-	-	1 (1125200)	-	1 (1125200)
506-2	BRIDGE DRAIN PIPE	LF	-	1297	-	-	1297
506-3	BRIDGE DRAINS	EA	-	17	-	-	17
521-5-1	CONCRETE TRAFFIC RAILING - BRIDGE (32" F-SHAPED)	LF	363	-	-	-	363
521-5-3	CONCRETE TRAFFIC RAILING - BRIDGE (32" F-SHAPE MEDIAN, DOUBLE FACE)	LF	182	2810	257	-	3249
521-5-9	CONCRETE TRAFFIC RAILING - BRIDGE(SPECIAL)	LF	-	-	512	-	512
521-5-20	CONCRETE TRAFFIC RAILING - BRIDGE (F-SHAPED WITH SOUND BARRIER WALL 8'HT)	LF	-	5629	-	-	5629
521-8-1	CONC. TRAF. RAILING - RET. WALL SYS. MOUNTED WITH SLEEPER SLAB (32" F-SHAPE)	LF	-	-	2223	-	2223
548-12	RETAINING WALL SYSTEM (PERMANENT)(EXCLUDING BARRIER)	SF	19481	62491	55628	-	137600
548-13	RETAINING WALL SYSTEM (TEMPORARY)(EXCLUDING BARRIER)	SF	-	-	-	10203	10203
750-1-19	AESTHETIC ARCHES	LS	-	-	1	-	1

NOTE:
For Fiber Optic Pipe Hanger Details, refer to the Fiber Optic Network Plans.

BRIDGE NOS. 750704, 750707 & 750743

REVISIONS

DATE	BY	DESCRIPTION	DATE	BY	DESCRIPTION

	NAMES	DATES
DRAWN BY	CJF	01-07
CHECKED BY	TED	01-07
DESIGNED BY	NJB	01-07
CHECKED BY	TED	01-07
APPROVED BY	T.E. Davidson P.E.	

ENGINEER OF RECORD:
PARSONS
2420 LAKEMONT AVE., SUITE 450, ORLANDO, FL 32814
PHONE: (407) 702-6800
CERTIFICATE OF AUTHORIZATION NO. 1838
THOMAS E. DAVIDSON, P.E. LIC. NO. 47131

EXPRESSWAY AUTHORITY

ROAD NO.	SR 414
COUNTY	ORANGE
FINANCIAL PROJECT ID	414-211

SHEET TITLE: SUMMARY OF BRIDGE PAY ITEMS AND PIPE HANGER DETAILS

PROJECT NAME: MAITLAND BLVD. EXTENSION SR 414 SECTION 211

SHEET NO. B-7

PARSONS

APPROACH SLAB INDEX NO. 20900 TABLE OF DIMENSIONS AND ESTIMATED QUANTITIES

Table Date 7-01-05

LOCATION	DIMENSIONS					ANGLE Φ	REINFORCING STEEL (Lbs.)	CLASS II CONCRETE (C.Y.)
	L 1	L 2	M1	M2	N			
Bridge No. 750704 SR 414 Over Spur 1 - Begin	34'-0"	34'-0"	1'-6½"	1'-6½"	142'-0"	28° 03'28"T.C.	35288	183.5
Bridge No. 750704 SR 414 Over Spur 1 - End	34'-0"	34'-0"	1'-6½"	1'-6½"	142'-0"	28° 03'28"T.C.	35288	183.5
Bridge No. 750707 SR 414 Viaduct - Begin	30'-2 7/16"	30'-2 9/16"	1'-6½"	1'-6½"	146'-0"	06° 36'53"	32412	167.7
Bridge No. 750707 SR 414 Viaduct - End	47'-11 9/16"	49'-5 1/16"	1'-6½"	1'-6½"	146'-0"	50° 38'07"	52393	274.2
Bridge No. 750743 SR 414 Over SR 500 (US 441) - Begin	31'-5½"	31'-5½"	1'-9"	1'-9"	134'-4⅝"	19° 35'20"T.C.	31006	161.5
Bridge No. 750743 SR 414 Over SR 500 (US 441) - End	31'-5½"	31'-5½"	1'-9"	1'-9"	134'-4⅝"	15° 20'55"T.C.	31006	161.5

Dimension and Quantity Notes:

Dimensions 'L 1' & 'L 2' are measured along gutter line, inside face of parapet or inside face of railing on raised sidewalks.
Dimensions 'L 1' & 'L 2' are arc dimensions within curved alignments.

Quantities shown are for one Approach Slab and where applicable, raised sidewalks. Quantities do not include items placed on the slab such as Traffic Railing, Pedestrian/Bicycle Railings or Traffic Separators.

For Traffic Railing, Pedestrian/Bicycle Railing and Traffic Separator Quantities see Bid Item List.

BRIDGE NOS. 750704, 750707 & 750743

REVISIONS

DATE	BY	DESCRIPTION	DATE	BY	DESCRIPTION

	NAMES	DATES
DRAWN BY	CJF	01-07
CHECKED BY	TED	01-07
DESIGNED BY	NJB	01-07
CHECKED BY	TED	01-07
APPROVED BY	T.E. Davidson P.E.	

ENGINEER OF RECORD:
PARSONS
2420 LAKEMONT AVE., SUITE 450, ORLANDO, FL 32814
PHONE: (407) 702-6800
CERTIFICATE OF AUTHORIZATION NO. 1838
THOMAS E. DAVIDSON, P.E. LIC. NO. 47131

EXPRESSWAY AUTHORITY

ROAD NO.	SR 414
COUNTY	ORANGE
FINANCIAL PROJECT ID	414-211

SHEET TITLE: APPROACH SLAB TABLE OF DIMENSIONS (FLEXIBLE)

PROJECT NAME: MAITLAND BLVD. EXTENSION SR 414 SECTION 211

SHEET NO. B-8

33259 3/30/2007 3:21:21 PM P:\646262\646262\struct\0Common_Shts\Bs20900.dgn

PARSONS

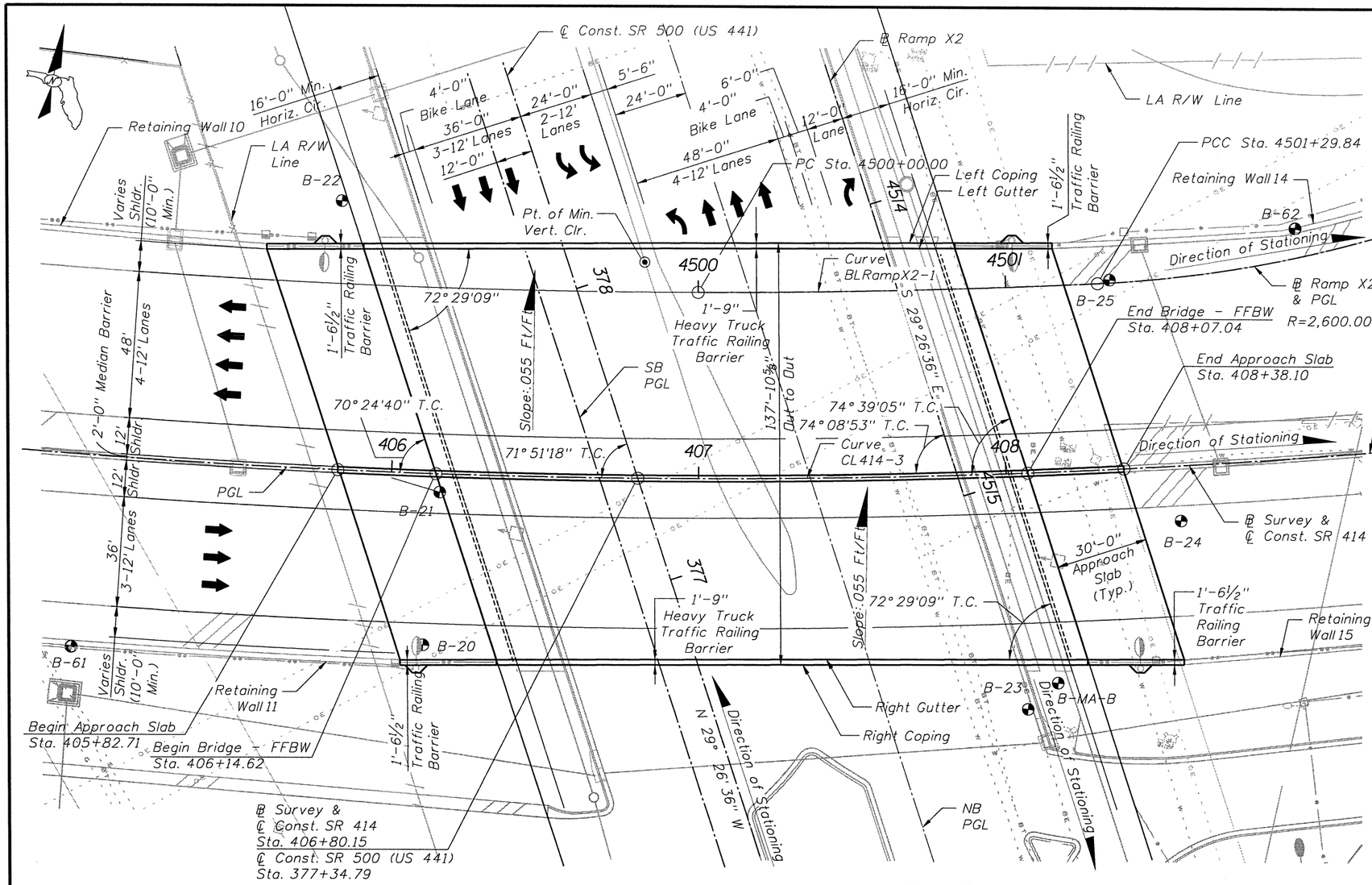

PLAN

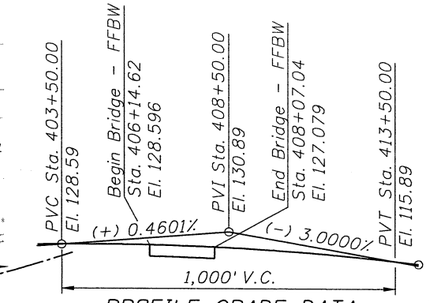

PROFILE GRADE DATA
SR 414

Curve CL 414-3
(PI Sta = 415+75.82)
Δ = 43°52'27" LT
T = 1,047.15'
L = 1,990.95'
R = 2,600.00'
e = 0.055
(PC Sta. = 405+28.67)
(PT Sta. = 425+19.62)

Curve BLRAMPX2-1
(PI Sta = 4500+64.93)
Δ = 2°55'48" LT
T = 64.93'
L = 129.84'
R = 2,539.00'
(PC Sta. = 4500+00.00)
(PT Sta. = 4501+29.84)

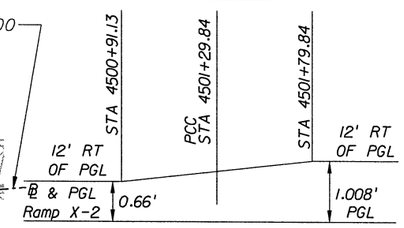

SUPERELEVATION TRANSITION
(RAMP X-2)

TRAFFIC DATA - SR 500 (US 441)
Year 2009 AADT > 36,400
Year 2029 AADT > 41,300
K = 9.2%
D = 57.9%
T = 10% (24 Hour)
Design Speed = 45 MPH

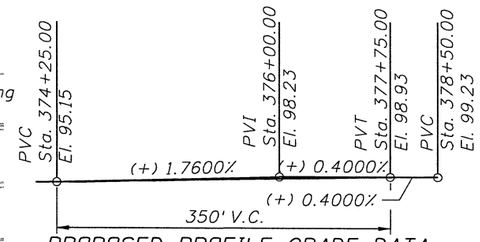

PROPOSED PROFILE GRADE DATA
SR 500 (US 441)

LEGEND
- Traffic Lanes
- Denotes Location of SPT Boring
- Bridge Mounted Light Pole
- FFBW Front Face of Backwall

TRAFFIC DATA - SR 414
Year 2009 AADT > 37,700
Year 2029 AADT > 65,100
K = 9.2%
D = 68%
T = 10% (24 Hour)
Design Speed = 70 MPH

Notes:
1. For additional Utilities information, refer to Roadway Plans.
2. Refer to Retaining Wall Plans for additional retaining wall layout information.
3. For additional Superelevation Transition information, refer to Roadway Plans.
4. Bridge copings are set to a tangent for Potential Aesthetic Treatments.
5. The Traffic Barrier and Heavy Railing Barrier matches along Gutter Line. See Retaining Wall Detail Sheet for Detail of Barrier adjustment.
6. See Roadway Plans for cross-slopes of US 441 under SR 414.
7. Refer to Lighting Plans for Additional Information. See Index 21200 for Light Pole Pilaster details and information.

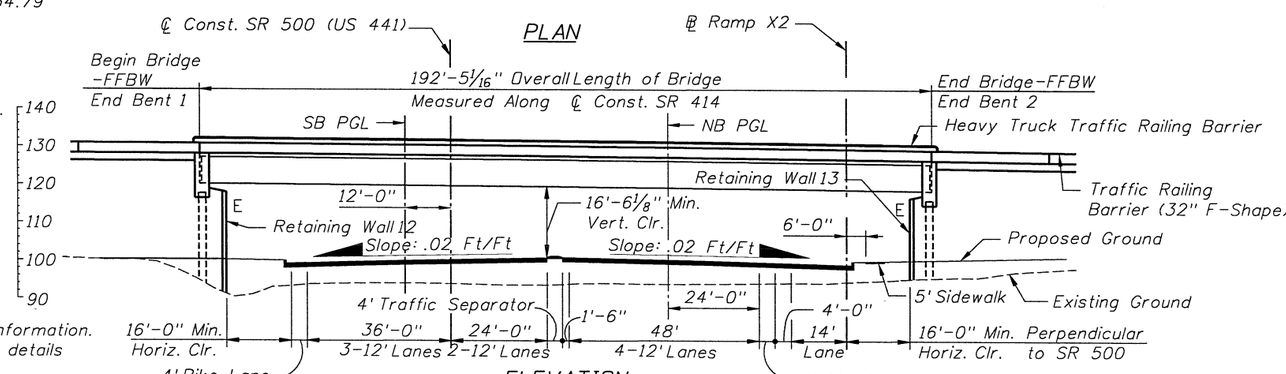

ELEVATION

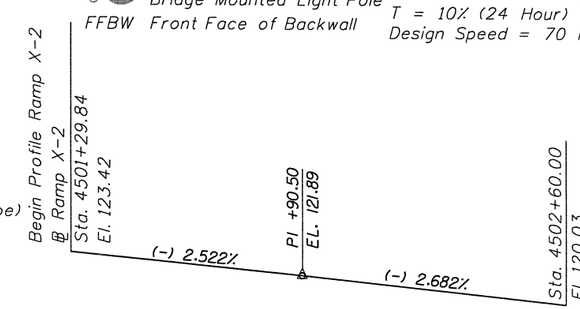

PARTIAL PROPOSED PROFILE GRADE DATA
RAMP X-2

Note: Arch, Pylon & Thrust Block not shown for clarity (See Arch Detail Sheets).

BRIDGE NO. 750743

REVISIONS

DATE	BY	DESCRIPTION	DATE	BY	DESCRIPTION

	NAMES	DATES
DRAWN BY	SDM	01-07
CHECKED BY	TED	01-07
DESIGNED BY	NJB	01-07
CHECKED BY	HGL	01-07
APPROVED BY	T.E. Davidson P.E.	

ENGINEER OF RECORD:
PARSONS
2420 LAKEMONT AVE., SUITE 450, ORLANDO, FL 32814
PHONE: (407) 702-6800
CERTIFICATE OF AUTHORIZATION NO. 1838
THOMAS E. DAVIDSON, P.E. LIC. NO. 47131

EXPRESSWAY AUTHORITY

ROAD NO.	SR 414
COUNTY	ORANGE
FINANCIAL PROJECT ID	414-211

SHEET TITLE: PLAN AND ELEVATION

PROJECT NAME: MAITLAND BLVD. EXTENSION SR 414 OVER SR 500 (US 441)

SHEET NO. B3-1

PARSONS

LEGEND

- SPT BORING LOCATION
- GSE GROUND SURFACE ELEVATION (FT. NAVD88)
- +93.5 ESTIMATED SEASONAL HIGH GROUNDWATER ELEVATION (FT. NAVD88)
- +92.5 ENCOUNTERED GROUNDWATER ELEVATION (FT. NAVD88)
- N STANDARD PENETRATION RESISTANCE, BLOWS PER FOOT
- (SP) UNIFIED SOIL CLASSIFICATION SYMBOL
- 50/5" NUMBER OF BLOWS FOR 5 INCHES OF PENETRATION
- BT BORING TERMINATED AT SPECIFIED DEPTH (FT.) INDICATED
- -200= PERCENT PASSING NO. 200 U.S. STANDARD SIEVE (FM 1-T 088)

SOILS LEGEND

- SAND
- CLAY
- SAND AND SILT

GENERAL NOTES

STANDARD PENETRATION TEST BORINGS WERE PERFORMED IN ACCORDANCE WITH ASTM D-1586. STANDARD PENETRATION RESISTANCES ARE SHOWN ON THE BORINGS AT THE TEST DEPTHS IN BLOWS PER FOOT UNLESS OTHERWISE NOTED.

SUBSURFACE CONDITIONS SHOWN ON THE BORINGS REPRESENT THE CONDITIONS ENCOUNTERED AT THE BORING LOCATIONS. ACTUAL CONDITIONS BETWEEN BORINGS MAY VARY FROM THOSE SHOWN. UNIFIED SOIL CLASSIFICATIONS SHOWN ON THE BORINGS ARE BASED ON VISUAL EXAMINATION AND THE LABORATORY TESTING SHOWN.

GEC BORING LOCATIONS AND GROUND SURFACE ELEVATIONS WERE SURVEYED FOR HORIZONTAL AND VERTICAL CONTROL BY TBE GROUP. BORINGS ARE REFERENCED FROM THE CENTERLINE OF CONSTRUCTION OF SR 414.

BASED ON A REVIEW OF THE U.S. GEOLOGICAL SURVEY MAP ENTITLED "POTENTIOMETRIC SURFACE OF THE UPPER FLORIDAN AQUIFER IN THE SEPTEMBER 2003" FOR THE PROJECT AREA, THE MAXIMUM ELEVATION OF THE ARTESIAN HEAD IS ESTIMATED TO BE APPROXIMATELY +55 ft. NGVD. THE CONTRACTOR SHALL BE PREPARED TO HANDLE ARTESIAN HEAD LEVELS UP TO +55 ft. NAVD88.

SPLIT SPOON SAMPLER:
INSIDE DIAMETER: 1.375 IN.
OUTSIDE DIAMETER: 2.0 IN.
AVERAGE HAMMER DROP: 30 IN.
HAMMER WEIGHT: 140 LBS.
HAMMER TYPE: SAFETY (MANUAL)

ENVIRONMENTAL CLASSIFICATION:
SUPERSTRUCTURE: SLIGHTLY AGGRESSIVE

SUBSTRUCTURE:
BURIED SUBSTRUCTURE ELEMENTS
STEEL: SLIGHTLY AGGRESSIVE *
CONCRETE: SLIGHTLY AGGRESSIVE *

EXPOSED SUBSTRUCTURE ELEMENTS
STEEL: EXTREMELY AGGRESSIVE (SOIL pH=5.6)
CONCRETE: MODERATELY AGGRESSIVE (SOIL pH=5.6)

* BASED ON RODNEY POWERS, (FDOT STATE CORROSION TECHNOLOGIST), MEMORANDUM DATED 12-21-06 CONCERNING SOIL RESISTIVITY AND THAT THE SUBSTRUCTURE PILES WILL BE BURIED.

CORRELATION OF STANDARD PENETRATION RESISTANCE WITH RELATIVE DENSITY AND CONSISTENCY OF SOIL

GRANULAR SOILS	N VALUE (blows per foot)	RELATIVE DENSITY
GRANULAR SOILS	0-4 4-10 10-30 30-50 OVER 50	VERY LOOSE LOOSE MEDIUM DENSE DENSE VERY DENSE
NON-GRANULAR SOILS	N VALUE (blows per foot)	CONSISTENCY
SILTS, CLAYS, MUCK, PEAT	0-2 2-4 4-8 8-15 15-30 OVER 30	VERY SOFT SOFT FIRM STIFF VERY STIFF HARD

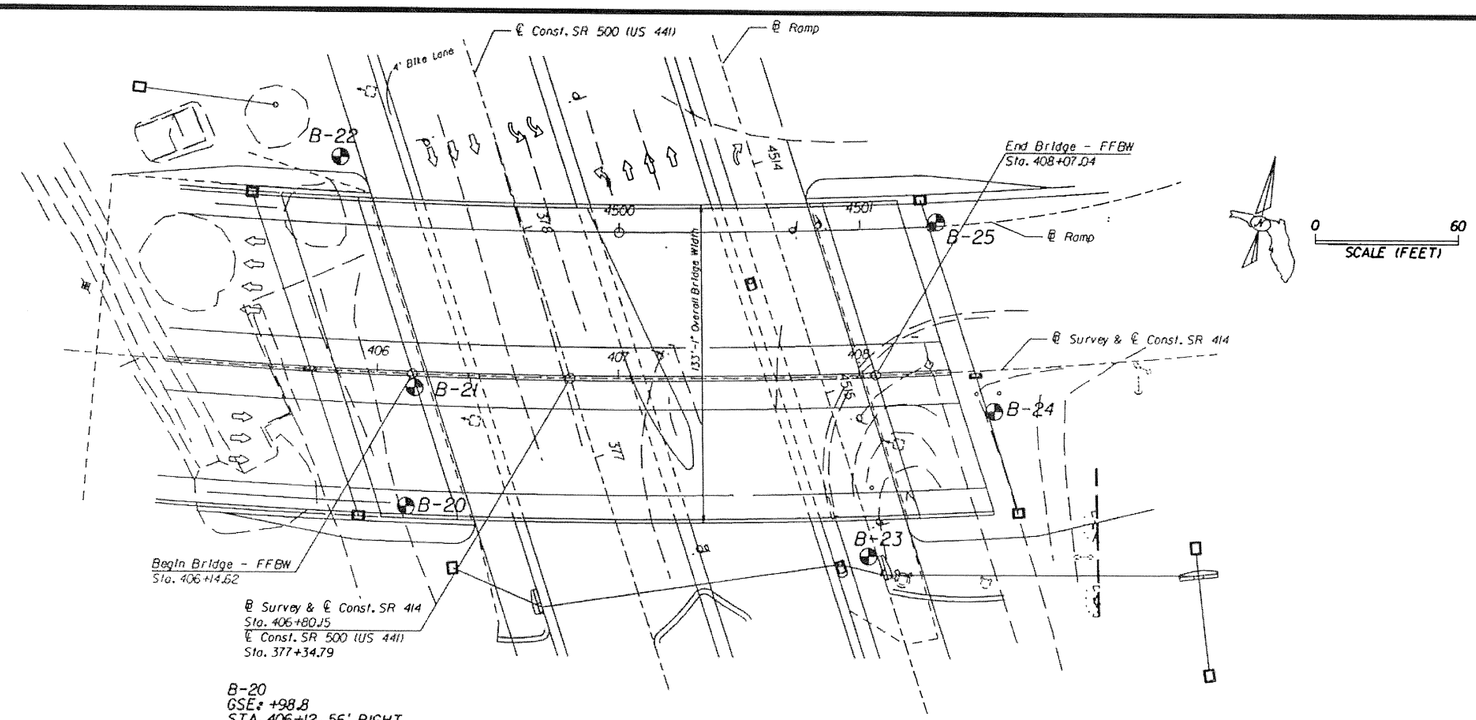

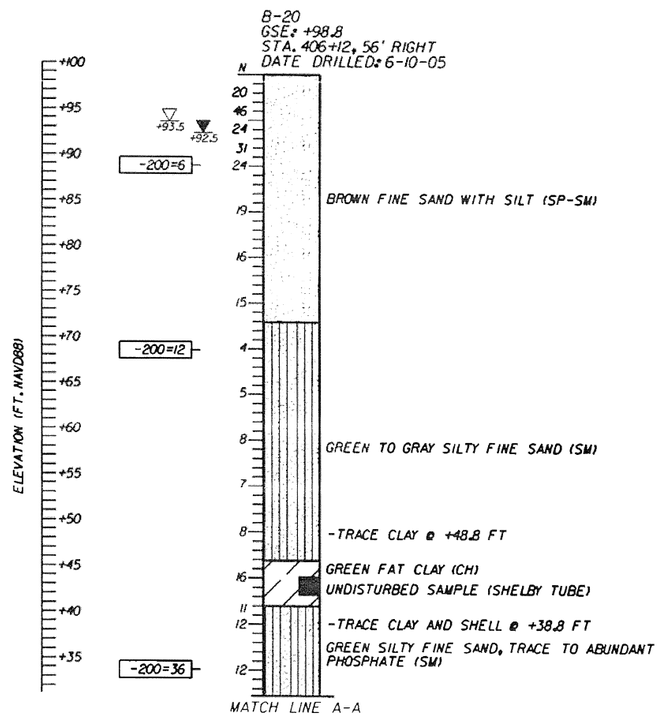

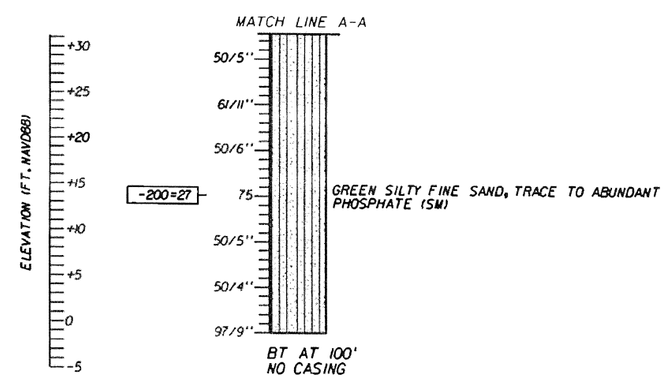

BRIDGE NO. 750743

REVISIONS

DATE	BY	DESCRIPTION	DATE	BY	DESCRIPTION

	NAMES	DATES
DRAWN BY	SKR	8-25-05
CHECKED BY	TAH	8-25-05
DESIGNED BY	TAH	8-25-05
CHECKED BY	CPM	8-25-05
APPROVED BY	CHRISTOPHER P. MEYER, P.E.	

ENGINEER OF RECORD:
Christopher P. Meyer, P.E.
P.E. License No. 49328
Geotechnical and Environmental Consultants, Inc.
1230 E. Hillcrest Street
Orlando, FL 32803
PH (407) 898-1818 FAX (407) 898-1837
Certificate of Authorization No. 00005882

GEC

EXPRESSWAY AUTHORITY

ROAD NO.	SR 414
COUNTY	ORANGE
FINANCIAL PROJECT ID	

SHEET TITLE:
REPORT OF SPT BORINGS FOR STRUCTURES

PROJECT NAME:
SR 414 BRIDGE OVER US HWY 441
MAITLAND BOULEVARD EXTENSION

SHEET NO.
B3-2

NOTICE: THE OFFICIAL RECORD OF THIS SHEET IS THE ELECTRONIC FILE SIGNED AND SEALED UNDER RULE 61G15-23.003, F.A.C.

FILE: J:\DATA\D37\023860\boringsi4.dgn

LEGEND

- SPT BORING LOCATION
- GSE GROUND SURFACE ELEVATION (FT. NAVD88)
- +93.5 ESTIMATED SEASONAL HIGH GROUNDWATER ELEVATION (FT. NAVD88)
- +92.0 ENCOUNTERED GROUNDWATER ELEVATION (FT. NAVD88)
- N STANDARD PENETRATION RESISTANCE, BLOWS PER FOOT
- (SP) UNIFIED SOIL CLASSIFICATION SYMBOL
- 50/3" NUMBER OF BLOWS FOR 3 INCHES OF PENETRATION
- BT BORING TERMINATED AT SPECIFIED DEPTH (FT.) INDICATED
- -200= PERCENT PASSING NO. 200 U.S. STANDARD SIEVE (FM 1-T 088)
- MC= NATURAL MOISTURE CONTENT (%) (FM 1-T 265)
- LL= LIQUID LIMIT (FM 1-T 089)
- PI= PLASTICITY INDEX (FM 1-T 090)

SOILS LEGEND

- SAND
- SAND AND SILT
- CLAY

GENERAL NOTES

STANDARD PENETRATION TEST BORINGS WERE PERFORMED IN ACCORDANCE WITH ASTM D-1586. STANDARD PENETRATION RESISTANCES ARE SHOWN ON THE BORINGS AT THE TEST DEPTHS IN BLOWS PER FOOT UNLESS OTHERWISE NOTED.

SUBSURFACE CONDITIONS SHOWN ON THE BORINGS REPRESENT THE CONDITIONS ENCOUNTERED AT THE BORING LOCATIONS. ACTUAL CONDITIONS BETWEEN BORINGS MAY VARY FROM THOSE SHOWN. UNIFIED SOIL CLASSIFICATIONS SHOWN ON THE BORINGS ARE BASED ON VISUAL EXAMINATION AND THE LABORATORY TESTING SHOWN.

GEC BORING LOCATIONS AND GROUND SURFACE ELEVATIONS WERE SURVEYED FOR HORIZONTAL AND VERTICAL CONTROL BY TBE GROUP. BORINGS ARE REFERENCED FROM THE CENTERLINE OF CONSTRUCTION OF SR 414.

BASED ON A REVIEW OF THE U.S. GEOLOGICAL SURVEY MAP ENTITLED "POTENTIOMETRIC SURFACE OF THE UPPER FLORIDAN AQUIFER IN THE SEPTEMBER 2003" FOR THE PROJECT AREA, THE MAXIMUM ELEVATION OF THE ARTESIAN HEAD IS ESTIMATED TO BE APPROXIMATELY +55 ft. NGVD. THE CONTRACTOR SHALL BE PREPARED TO HANDLE ARTESIAN HEAD LEVELS UP TO +55 ft. NAVD88.

SPLIT SPOON SAMPLER:
INSIDE DIAMETER: 1.375 IN.
OUTSIDE DIAMETER: 2.0 IN.
AVERAGE HAMMER DROP: 30 IN.
HAMMER WEIGHT: 140 LBS.
HAMMER TYPE: SAFETY (MANUAL)

ENVIRONMENTAL CLASSIFICATION:
SUPERSTRUCTURE: SLIGHTLY AGGRESSIVE

SUBSTRUCTURE:
BURIED SUBSTRUCTURE ELEMENTS
STEEL: SLIGHTLY AGGRESSIVE*
CONCRETE: SLIGHTLY AGGRESSIVE*

EXPOSED SUBSTRUCTURE ELEMENTS
STEEL: EXTREMELY AGGRESSIVE (SOIL pH=5.6)
CONCRETE: MODERATELY AGGRESSIVE (SOIL pH=5.6)

*BASED ON ROONEY POWERS, (FDOT STATE CORROSION TECHNOLOGIST), MEMORANDOM DATED 12-21-06 CONCERNING SOIL RESISTIVITY AND THAT THE SUBSTRUCTURE PILES WILL BE BURIED.

CORRELATION OF STANDARD PENETRATION RESISTANCE WITH RELATIVE DENSITY AND CONSISTENCY OF SOIL

GRANULAR SOILS	N VALUE (blows per foot)	RELATIVE DENSITY
GRANULAR SOILS	0-4 4-10 10-30 30-50 OVER 50	VERY LOOSE LOOSE MEDIUM DENSE DENSE VERY DENSE
NON-GRANULAR SOILS	**N VALUE (blows per foot)**	**CONSISTENCY**
SILTS, CLAYS, MUCK, PEAT	0-2 2-4 4-8 8-15 15-30 OVER 30	VERY SOFT SOFT FIRM STIFF VERY STIFF HARD

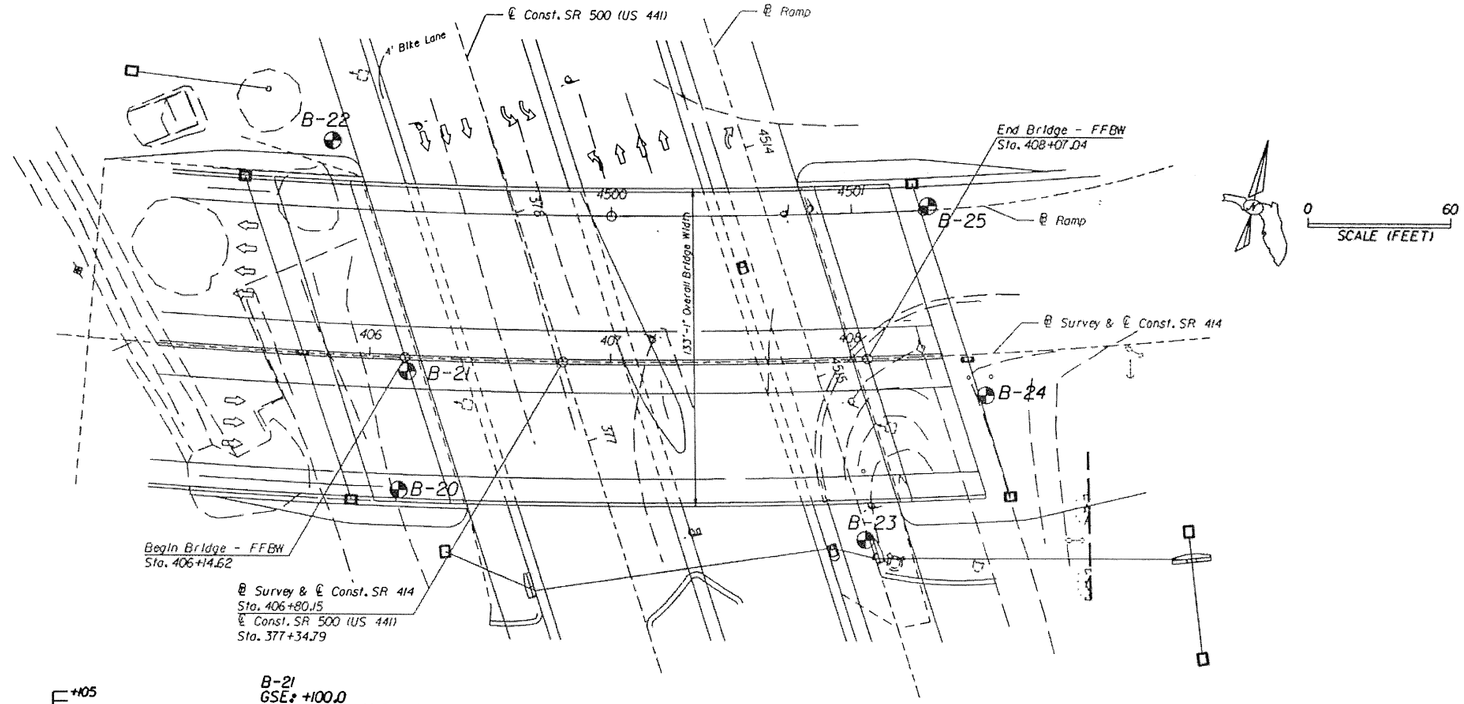

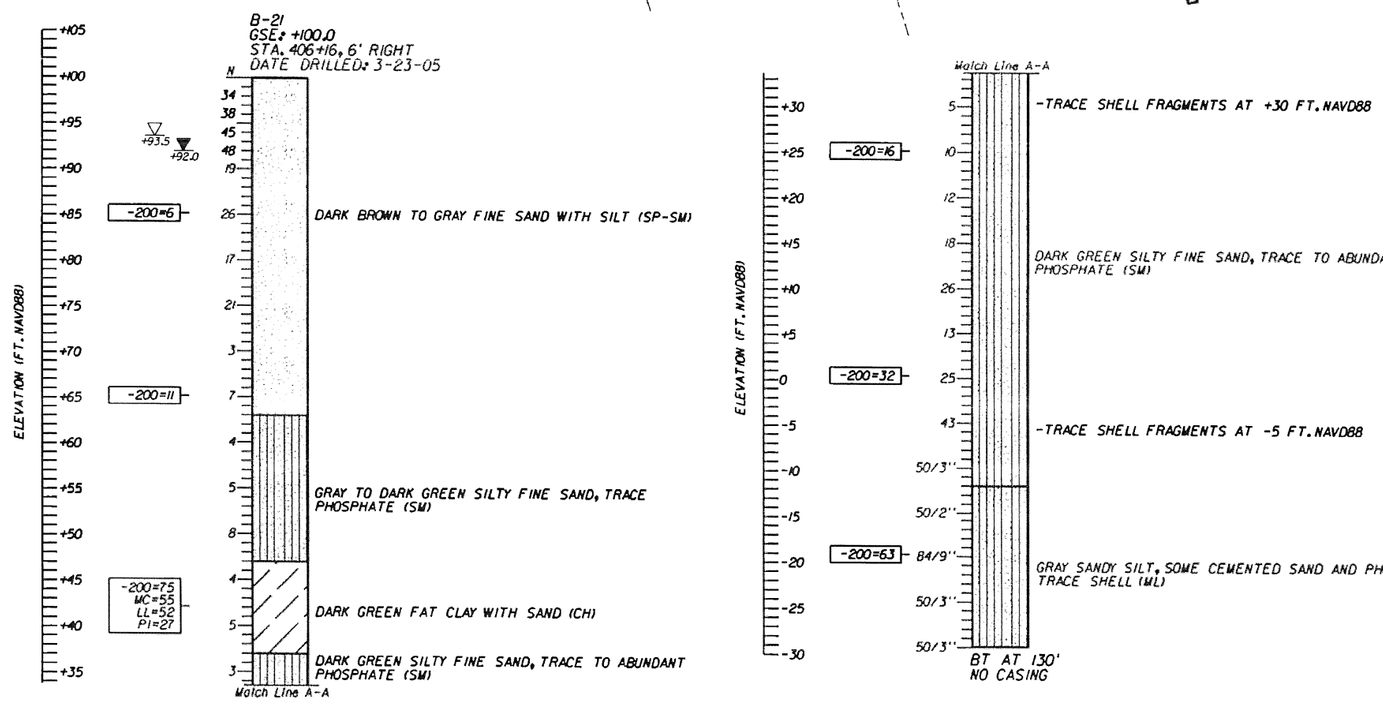

BRIDGE NO. 750743

REVISIONS					
DATE	BY	DESCRIPTION	DATE	BY	DESCRIPTION

	NAMES	DATES
DRAWN BY	SKR	4-1-05
CHECKED BY	TAH	4-1-05
DESIGNED BY	TAH	4-1-05
CHECKED BY	CPM	4-1-05
APPROVED BY	CHRISTOPHER P. MEYER, P.E.	

ENGINEER OF RECORD:
GEC
Christopher P. Meyer, P.E.
P.E. License No. 49328
Geotechnical and Environmental Consultants, Inc.
1230 E. Hillcrest Street
Orlando, FL 32803
PH (407) 898-1818 FAX (407) 898-1837
Certificate of Authorization No. 00005882

EXPRESSWAY AUTHORITY

ROAD NO.	SR 414
COUNTY	ORANGE
FINANCIAL PROJECT ID	

SHEET TITLE: REPORT OF SPT BORINGS FOR STRUCTURES

PROJECT NAME: SR 414 BRIDGE OVER US HWY 441
MAITLAND BOULEVARD EXTENSION

SHEET NO. B3-3

NOTICE: THE OFFICIAL RECORD OF THIS SHEET IS THE ELECTRONIC FILE SIGNED AND SEALED UNDER RULE 61G15-23.003, F.A.C.

FILE: J:\DATA\0370213860\borings02.dgn

LEGEND

- SPT BORING LOCATION
- GSE GROUND SURFACE ELEVATION (FT. NAVD88)
- +90.5 ESTIMATED SEASONAL HIGH GROUNDWATER ELEVATION (FT. NAVD88)
- +86.3 ENCOUNTERED GROUNDWATER ELEVATION (FT. NAVD88)
- N STANDARD PENETRATION RESISTANCE, BLOWS PER FOOT
- (SP) UNIFIED SOIL CLASSIFICATION SYMBOL
- 50/6" NUMBER OF BLOWS FOR 6 INCHES OF PENETRATION
- BT BORING TERMINATED AT SPECIFIED DEPTH (FT.) INDICATED
- -200= PERCENT PASSING NO. 200 U.S. STANDARD SIEVE (FM 1-T 088)
- MC= NATURAL MOISTURE CONTENT (%)(FM 1-T 265)
- LL= LIQUID LIMIT (FM 1-T 089)
- PI= PLASTICITY INDEX (FM 1-T 090)

SOILS LEGEND

- SAND
- CLAY
- SAND AND SILT

GENERAL NOTES

STANDARD PENETRATION TEST BORINGS WERE PERFORMED IN ACCORDANCE WITH ASTM D-1586, STANDARD PENETRATION RESISTANCES ARE SHOWN ON THE BORINGS AT THE TEST DEPTHS IN BLOWS PER FOOT UNLESS OTHERWISE NOTED.

SUBSURFACE CONDITIONS SHOWN ON THE BORINGS REPRESENT THE CONDITIONS ENCOUNTERED AT THE BORING LOCATIONS. ACTUAL CONDITIONS BETWEEN BORINGS MAY VARY FROM THOSE SHOWN. UNIFIED SOIL CLASSIFICATIONS SHOWN ON THE BORINGS ARE BASED ON VISUAL EXAMINATION AND THE LABORATORY TESTING SHOWN.

GEC BORING LOCATIONS AND GROUND SURFACE ELEVATIONS WERE SURVEYED FOR HORIZONTAL AND VERTICAL CONTROL BY TBE GROUP. BORINGS ARE REFERENCED FROM THE CENTERLINE OF CONSTRUCTION OF SR 414.

BASED ON A REVIEW OF THE U.S. GEOLOGICAL SURVEY MAP ENTITLED "POTENTIOMETRIC SURFACE OF THE UPPER FLORIDAN AQUIFER IN THE SEPTEMBER 2003" FOR THE PROJECT AREA, THE MAXIMUM ELEVATION OF THE ARTESIAN HEAD IS ESTIMATED TO BE APPROXIMATELY +55 ft. NGVD. THE CONTRACTOR SHALL BE PREPARED TO HANDLE ARTESIAN HEAD LEVELS UP TO +55 ft. NAVD88.

SPLIT SPOON SAMPLER:
INSIDE DIAMETER: 1.375 IN.
OUTSIDE DIAMETER: 2.0 IN.
AVERAGE HAMMER DROP: 30 IN.
HAMMER WEIGHT: 140 LBS.
HAMMER TYPE: SAFETY (MANUAL)

ENVIRONMENTAL CLASSIFICATION:
SUPERSTRUCTURE: SLIGHTLY AGGRESSIVE

SUBSTRUCTURE:
BURIED SUBSTRUCTURE ELEMENTS
STEEL: SLIGHTLY AGGRESSIVE *
CONCRETE: SLIGHTLY AGGRESSIVE *

EXPOSED SUBSTRUCTURE ELEMENTS
STEEL: EXTREMELY AGGRESSIVE (SOIL pH=5.6)
CONCRETE: MODERATELY AGGRESSIVE (SOIL pH=5.6)

* BASED ON RODNEY POWERS, (FDOT STATE CORROSION TECHNOLOGIST), MEMORANDOM DATED 12-21-06 CONCERNING SOIL RESISTIVITY AND THAT THE SUBSTRUCTURE PILES WILL BE BURIED.

CORRELATION OF STANDARD PENETRATION RESISTANCE WITH RELATIVE DENSITY AND CONSISTENCY OF SOIL

GRANULAR SOILS	N VALUE (blows per foot)	RELATIVE DENSITY
GRANULAR SOILS	0-4 4-10 10-30 30-50 OVER 50	VERY LOOSE LOOSE MEDIUM DENSE DENSE VERY DENSE
NON-GRANULAR SOILS	N VALUE (blows per foot)	CONSISTENCY
SILTS, CLAYS, MUCK, PEAT	0-2 2-4 4-8 8-15 15-30 OVER 30	VERY SOFT SOFT FIRM STIFF VERY STIFF HARD

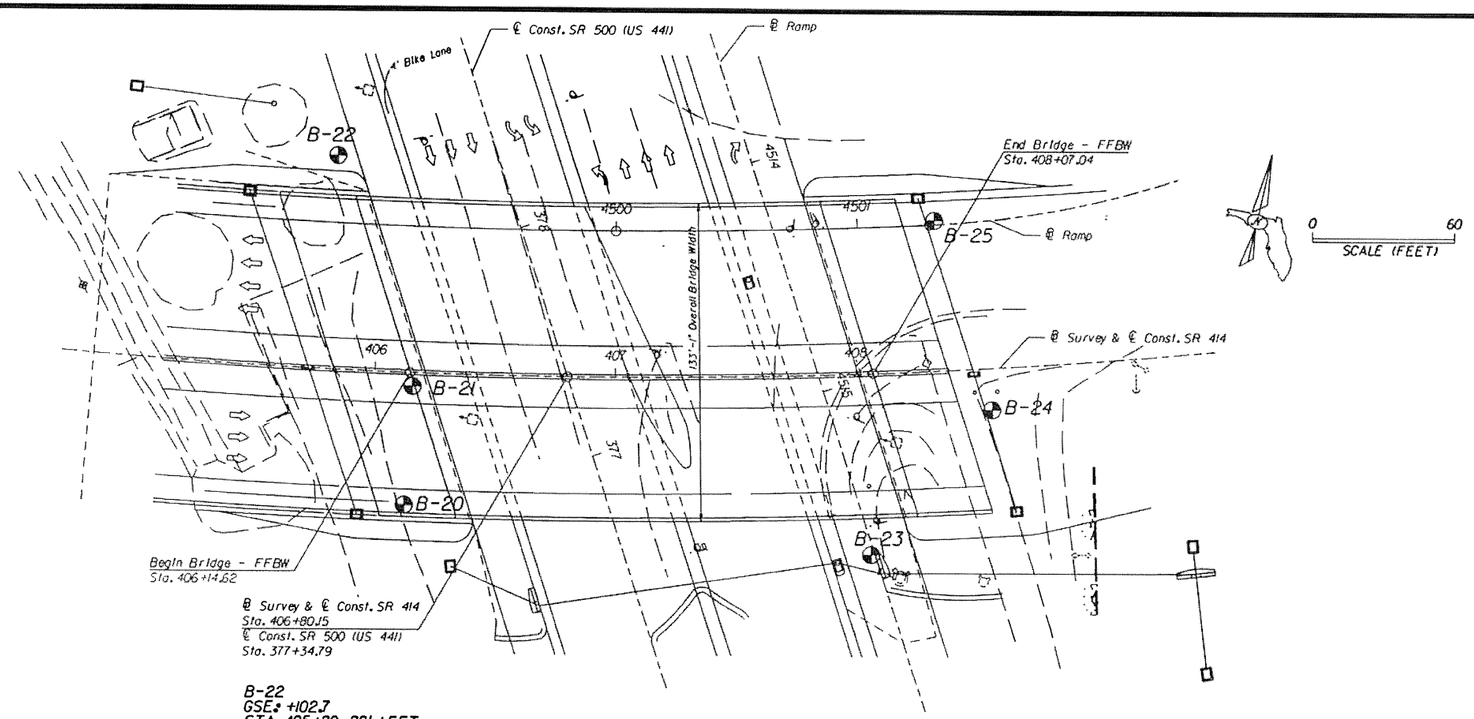

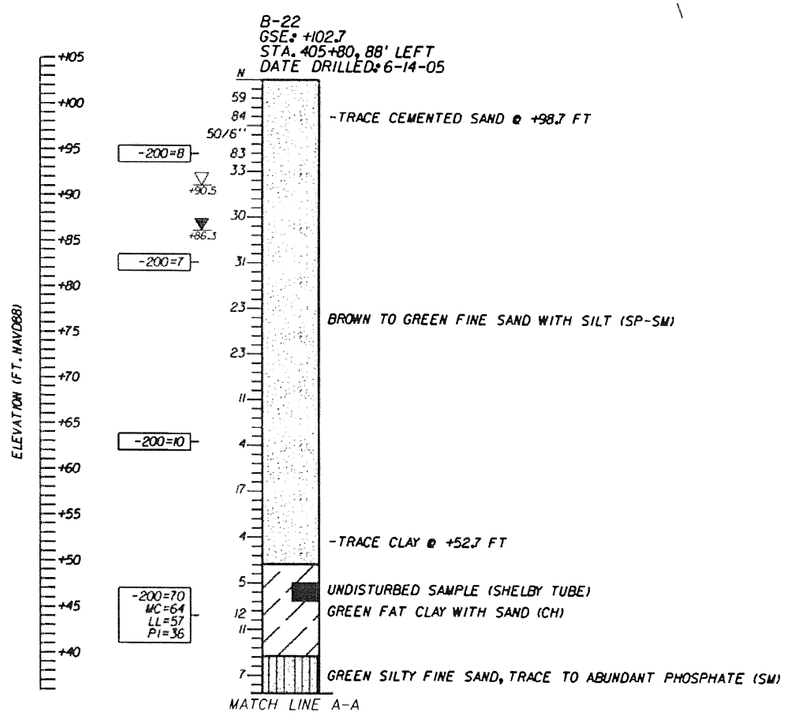

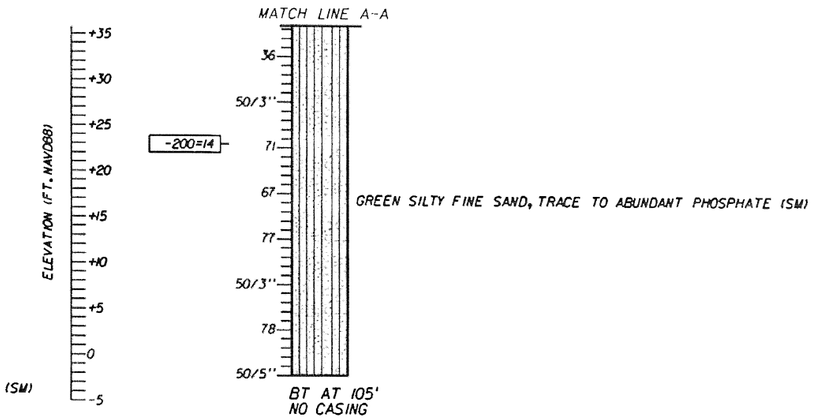

BRIDGE NO. 750743

REVISIONS

DATE	BY	DESCRIPTION	DATE	BY	DESCRIPTION

	NAMES	DATES
DRAWN BY	SKR	8-25-05
CHECKED BY	TAH	8-25-05
DESIGNED BY	TAH	8-25-05
CHECKED BY	CPW	8-25-05
APPROVED BY	CHRYSTOPHER P. MEYER, P.E.	

ENGINEER OF RECORD:
Christopher P. Meyer, P.E.
P.E. License No. 49328
Geotechnical and Environmental Consultants, Inc.
1230 E. Hillcrest Street
Orlando, FL 32803
PH (407) 898-1818 FAX (407) 898-1837
Certificate of Authorization No. 00005882
GEC

EXPRESSWAY AUTHORITY

ROAD NO.	SR 414
COUNTY	ORANGE
FINANCIAL PROJECT ID	

SHEET TITLE: REPORT OF SPT BORINGS FOR STRUCTURES

PROJECT NAME: SR 414 BRIDGE OVER US HWY 441
MAITLAND BOULEVARD EXTENSION

SHEET NO. B3-4

NOTICE: THE OFFICIAL RECORD OF THIS SHEET IS THE ELECTRONIC FILE SIGNED AND SEALED UNDER RULE 61G15-23.003, F.A.C.

FILE: J:\DATA\D3702\13860\borings\5.dgn

LEGEND

- SPT BORING LOCATION
- GSE GROUND SURFACE ELEVATION (FT. NAVD88)
- +92.6 ESTIMATED SEASONAL HIGH GROUNDWATER ELEVATION (FT. NAVD88)
- +89.9 ENCOUNTERED GROUNDWATER ELEVATION (FT. NAVD88)
- N STANDARD PENETRATION RESISTANCE, BLOWS PER FOOT
- (SP) UNIFIED SOIL CLASSIFICATION SYMBOL
- 50/5" NUMBER OF BLOWS FOR 5 INCHES OF PENETRATION
- BT BORING TERMINATED AT SPECIFIED DEPTH (FT.) INDICATED
- -200= PERCENT PASSING NO. 200 U.S. STANDARD SIEVE (FM 1-T 088)
- MC= NATURAL MOISTURE CONTENT (%) (FM 1-T 265)
- LL= LIQUID LIMIT (FM 1-T 089)
- PI= PLASTICITY INDEX (FM 1-T 090)
- NP= NON-PLASTIC

SOILS LEGEND

- SAND
- CLAY
- SAND AND SILT
- SAND AND CLAY

GENERAL NOTES

STANDARD PENETRATION TEST BORINGS WERE PERFORMED IN ACCORDANCE WITH ASTM D-1586. STANDARD PENETRATION RESISTANCES ARE SHOWN ON THE BORINGS AT THE TEST DEPTHS IN BLOWS PER FOOT UNLESS OTHERWISE NOTED.

SUBSURFACE CONDITIONS SHOWN ON THE BORINGS REPRESENT THE CONDITIONS ENCOUNTERED AT THE BORING LOCATIONS. ACTUAL CONDITIONS BETWEEN BORINGS MAY VARY FROM THOSE SHOWN. UNIFIED SOIL CLASSIFICATIONS SHOWN ON THE BORINGS ARE BASED ON VISUAL EXAMINATION AND THE LABORATORY TESTING SHOWN.

GEC BORING LOCATIONS AND GROUND SURFACE ELEVATIONS WERE SURVEYED FOR HORIZONTAL AND VERTICAL CONTROL BY TBE GROUP. BORINGS ARE REFERENCED FROM THE CENTERLINE OF CONSTRUCTION OF SR 414.

BASED ON A REVIEW OF THE U.S. GEOLOGICAL SURVEY MAP ENTITLED "POTENTIOMETRIC SURFACE OF THE UPPER FLORIDAN AQUIFER IN THE SEPTEMBER 2003" FOR THE PROJECT AREA, THE MAXIMUM ELEVATION OF THE ARTESIAN HEAD IS ESTIMATED TO BE APPROXIMATELY +55 ft. NGVD. THE CONTRACTOR SHALL BE PREPARED TO HANDLE ARTESIAN HEAD LEVELS UP TO +55 ft. NAVD88.

SPLIT SPOON SAMPLER:
INSIDE DIAMETER: 1.375 IN.
OUTSIDE DIAMETER: 2.0 IN.
AVERAGE HAMMER DROP: 30 IN.
HAMMER WEIGHT: 140 LBS.
HAMMER TYPE: SAFETY (MANUAL)

ENVIRONMENTAL CLASSIFICATION:
SUPERSTRUCTURE: SLIGHTLY AGGRESSIVE

SUBSTRUCTURE:
BURIED SUBSTRUCTURE ELEMENTS
STEEL: SLIGHTLY AGGRESSIVE *
CONCRETE: SLIGHTLY AGGRESSIVE *

EXPOSED SUBSTRUCTURE ELEMENTS
STEEL: EXTREMELY AGGRESSIVE (SOIL pH=5.6)
CONCRETE: MODERATELY AGGRESSIVE (SOIL pH=5.6)

* BASED ON RODNEY POWERS, (FDOT STATE CORROSION TECHNOLOGIST), MEMORANDOM DATED 12-21-06 CONCERNING SOIL RESISTIVITY AND THAT THE SUBSTRUCTURE PILES WILL BE BURIED.

CORRELATION OF STANDARD PENETRATION RESISTANCE WITH RELATIVE DENSITY AND CONSISTENCY OF SOIL

GRANULAR SOILS	N VALUE (blows per foot)	RELATIVE DENSITY
GRANULAR SOILS	0-4 4-10 10-30 30-50 OVER 50	VERY LOOSE LOOSE MEDIUM DENSE DENSE VERY DENSE
NON-GRANULAR SOILS	N VALUE (blows per foot)	CONSISTENCY
SILTS, CLAYS, MUCK, PEAT	0-2 2-4 4-8 8-15 15-30 OVER 30	VERY SOFT SOFT FIRM STIFF VERY STIFF HARD

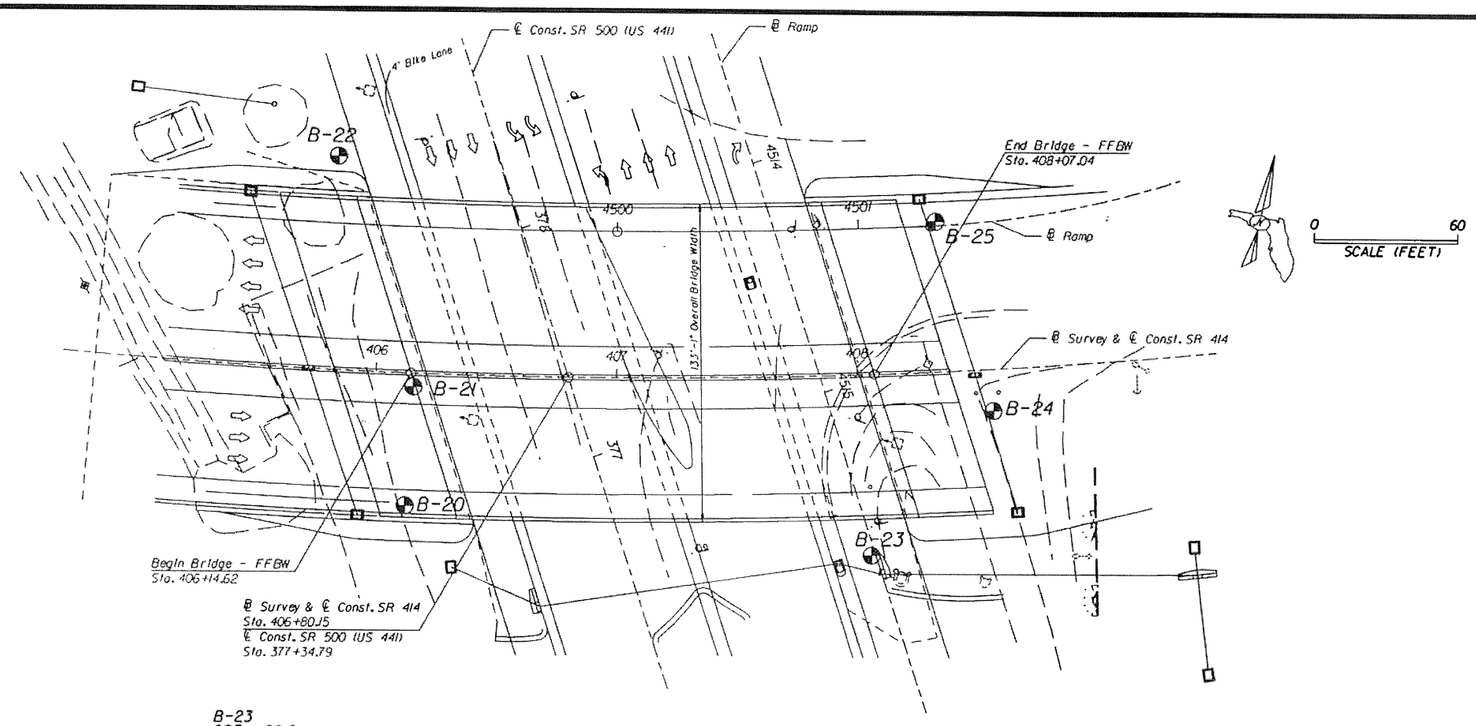

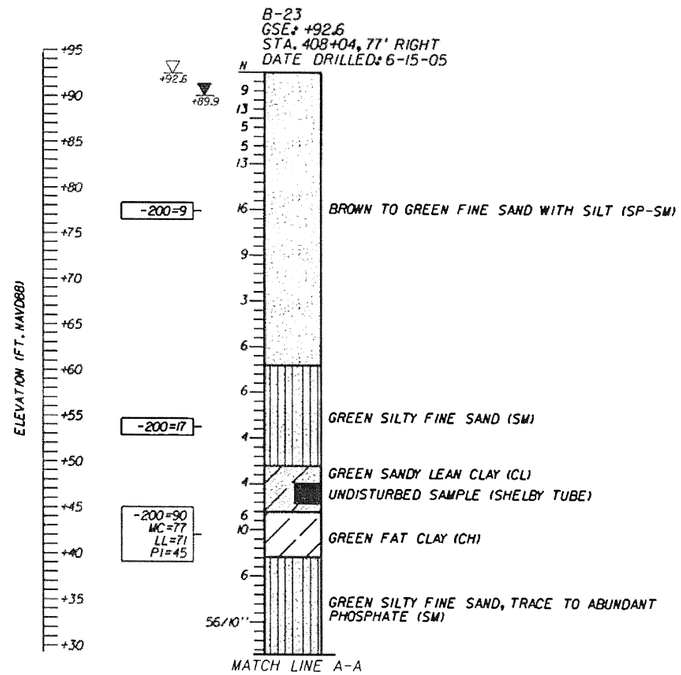

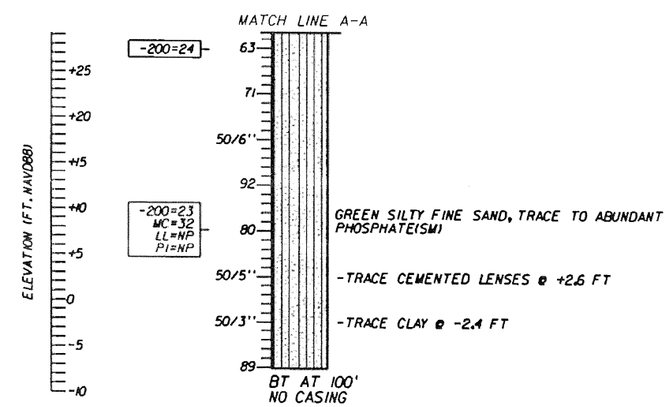

BRIDGE NO. 750743

REVISIONS

DATE	BY	DESCRIPTION	DATE	BY	DESCRIPTION

	NAMES	DATES
DRAWN BY	SKR	8-25-05
CHECKED BY	TAH	8-25-05
DESIGNED BY	TAH	8-25-05
CHECKED BY	CPW	8-25-05
APPROVED BY	CHRISTOPHER P. WEYER, P.E.	

ENGINEER OF RECORD:
Christopher P. Weyer, P.E.
P.E. License No. 49328
Geotechnical and Environmental Consultants, Inc.
1230 E. Hillcrest Street
Orlando, FL 32803
PH (407) 898-1818 FAX (407) 898-1837
Certificate of Authorization No. 00005882
GEC

EXPRESSWAY AUTHORITY

ROAD NO.	SR 414
COUNTY	ORANGE
FINANCIAL PROJECT ID	

SHEET TITLE: REPORT OF SPT BORINGS FOR STRUCTURES

PROJECT NAME: SR 414 BRIDGE OVER US HWY 441
MAITLAND BOULEVARD EXTENSION

SHEET NO. B3-5

NOTICE: THE OFFICIAL RECORD OF THIS SHEET IS THE ELECTRONIC FILE SIGNED AND SEALED UNDER RULE 61G15-23.003, F.A.C.

FILE: J:\DATA\D37\213860\borings16.dgn

LEGEND

- SPT BORING LOCATION
- GSE GROUND SURFACE ELEVATION (FT. NAVD88)
- +93.5 ESTIMATED SEASONAL HIGH GROUNDWATER ELEVATION (FT. NAVD88)
- +91.2 ENCOUNTERED GROUNDWATER ELEVATION (FT. NAVD88)
- N STANDARD PENETRATION RESISTANCE, BLOWS PER FOOT
- (SP) UNIFIED SOIL CLASSIFICATION SYMBOL
- HA HAND AUGERED FOR UTILITY CLEARANCE
- 50/5" NUMBER OF BLOWS FOR 5 INCHES OF PENETRATION
- BT BORING TERMINATED AT SPECIFIED DEPTH (FT.) INDICATED
- -200= PERCENT PASSING NO. 200 U.S. STANDARD SIEVE (FM 1-T 088)
- MC= NATURAL MOISTURE CONTENT (%)(FM 1-T 265)
- LL= LIQUID LIMIT (FM 1-T 089)
- PI= PLASTICITY INDEX (FM 1-T 090)

SOILS LEGEND

- SAND
- CLAY
- SAND AND SILT

GENERAL NOTES

STANDARD PENETRATION TEST BORINGS WERE PERFORMED IN ACCORDANCE WITH ASTM D-1586, STANDARD PENETRATION RESISTANCES ARE SHOWN ON THE BORINGS AT THE TEST DEPTHS IN BLOWS PER FOOT UNLESS OTHERWISE NOTED.

SUBSURFACE CONDITIONS SHOWN ON THE BORINGS REPRESENT THE CONDITIONS ENCOUNTERED AT THE BORING LOCATIONS. ACTUAL CONDITIONS BETWEEN BORINGS MAY VARY FROM THOSE SHOWN. UNIFIED SOIL CLASSIFICATIONS SHOWN ON THE BORINGS ARE BASED ON VISUAL EXAMINATION AND THE LABORATORY TESTING SHOWN.

GEC BORING LOCATIONS AND GROUND SURFACE ELEVATIONS WERE SURVEYED FOR HORIZONTAL AND VERTICAL CONTROL BY TBE GROUP. BORINGS ARE REFERENCED FROM THE CENTERLINE OF CONSTRUCTION OF SR 414.

BASED ON A REVIEW OF THE U.S. GEOLOGICAL SURVEY MAP ENTITLED "POTENTIOMETRIC SURFACE OF THE UPPER FLORIDAN AQUIFER IN THE SEPTEMBER 2003" FOR THE PROJECT AREA, THE MAXIMUM ELEVATION OF THE ARTESIAN HEAD IS ESTIMATED TO BE APPROXIMATELY +55 ft. NGVD. THE CONTRACTOR SHALL BE PREPARED TO HANDLE ARTESIAN HEAD LEVELS UP TO +55 ft. NAVD88.

SPLIT SPOON SAMPLER:
INSIDE DIAMETER: 1.375 IN.
OUTSIDE DIAMETER: 2.0 IN.
AVERAGE HAMMER DROP: 30 IN.
HAMMER WEIGHT: 140 LBS.
HAMMER TYPE: SAFETEY (MANUAL)

ENVIRONMENTAL CLASSIFICATION:
SUPERSTRUCTURE: SLIGHTLY AGGRESSIVE

SUBSTRUCTURE:
BURIED SUBSTRUCTURE ELEMENTS
STEEL: SLIGHTLY AGGRESSIVE*
CONCRETE: SLIGHTLY AGGRESSIVE*

EXPOSED SUBSTRUCTURE ELEMENTS
STEEL: EXTREMELY AGGRESSIVE (SOIL pH=5.6)
CONCRETE: MODERATELY AGGRESSIVE (SOIL pH=5.6)

*BASED ON ROONEY POWERS, (FDOT STATE CORROSION TECHNOLOGIST), MEMORANDOM DATED 12-21-06 CONCERNING SOIL RESISTIVITY AND THAT THE SUBSTRUCTURE PILES WILL BE BURIED.

CORRELATION OF STANDARD PENETRATION RESISTANCE WITH RELATIVE DENSITY AND CONSISTENCY OF SOIL

GRANULAR SOILS	N VALUE (blows per foot)	RELATIVE DENSITY
GRANULAR SOILS	0-4 4-10 10-30 30-50 OVER 50	VERY LOOSE LOOSE MEDIUM DENSE DENSE VERY DENSE
NON-GRANULAR SOILS	N VALUE (blows per foot)	CONSISTENCY
SILTS, CLAYS, MUCK, PEAT	0-2 2-4 4-8 8-15 15-30 OVER 30	VERY SOFT SOFT FIRM STIFF VERY STIFF HARD

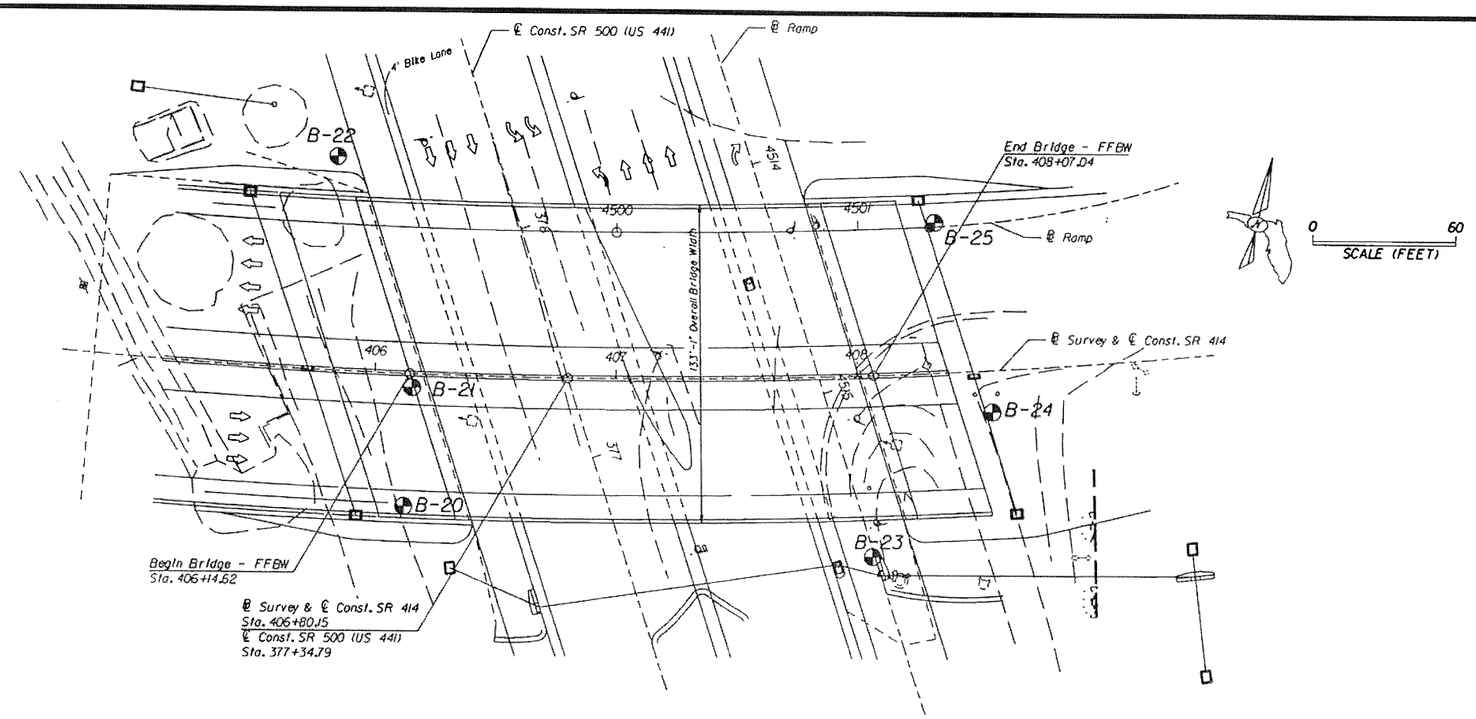

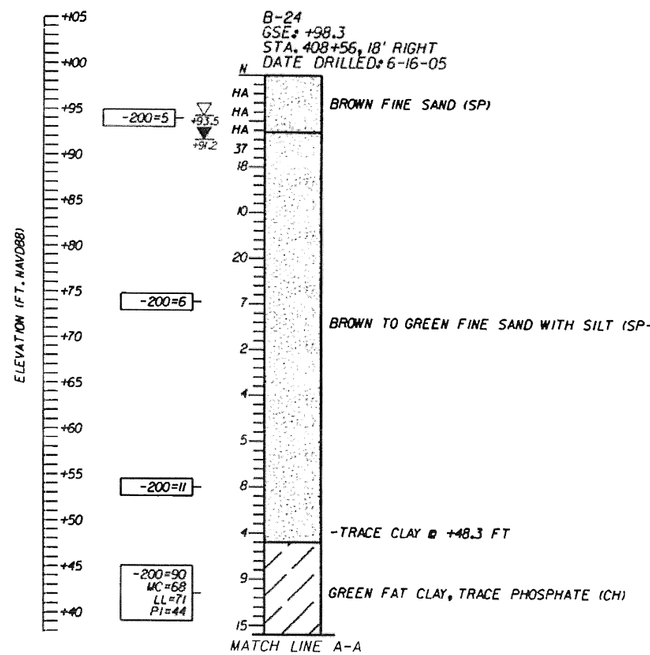

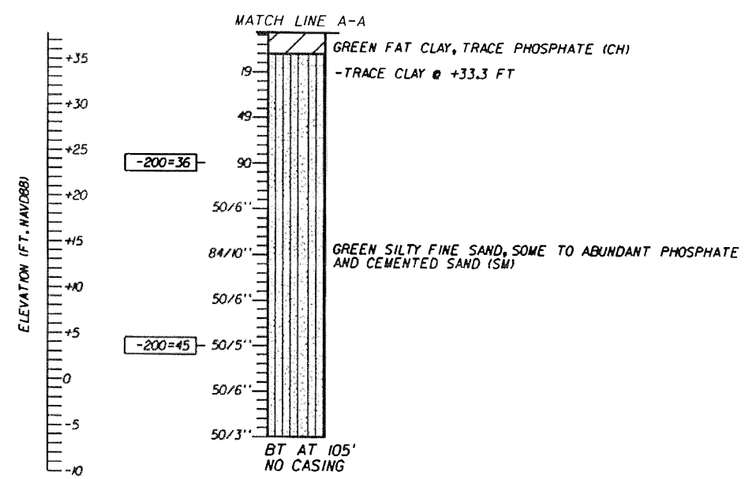

BRIDGE NO. 750743

REVISIONS

DATE	BY	DESCRIPTION	DATE	BY	DESCRIPTION

	NAMES	DATES
DRAWN BY	SKR	8-25-05
CHECKED BY	TAH	8-25-05
DESIGNED BY	TAH	8-25-05
CHECKED BY	CPM	8-25-05
APPROVED BY	CHRISTOPHER P. MEYER, P.E.	

ENGINEER OF RECORD:
Christopher P. Meyer, P.E.
P.E. License No. 49328
Geotechnical and Environmental Consultants, Inc.
1230 E. Hillcrest Street
Orlando, FL 32803
PH (407) 896-1818 FAX (407) 896-1837
Certificate of Authorization No. 00005882
GEC

EXPRESSWAY AUTHORITY

ROAD NO.	SR 414
COUNTY	ORANGE
FINANCIAL PROJECT ID	

SHEET TITLE: REPORT OF SPT BORINGS FOR STRUCTURES

PROJECT NAME: SR 414 BRIDGE OVER US HWY 441
MAITLAND BOULEVARD EXTENSION

SHEET NO. B3-6

NOTICE: THE OFFICIAL RECORD OF THIS SHEET IS THE ELECTRONIC FILE SIGNED AND SEALED UNDER RULE 61G15-23.003, F.A.C.

FILE: J:\DATA\D370\21380\borings18.dgn

LEGEND

- SPT BORING LOCATION
- GSE GROUND SURFACE ELEVATION (FT. NAVD88)
- +93.5 ESTIMATED SEASONAL HIGH GROUNDWATER ELEVATION (FT. NAVD88)
- +90.6 ENCOUNTERED GROUNDWATER ELEVATION (FT. NAVD88)
- N STANDARD PENETRATION RESISTANCE, BLOWS PER FOOT
- (SP) UNIFIED SOIL CLASSIFICATION SYMBOL
- HA HAND AUGERED FOR UTILITY CLEARANCE
- 50/5" NUMBER OF BLOWS FOR 5 INCHES OF PENETRATION
- BT BORING TERMINATED AT SPECIFIED DEPTH (FT.) INDICATED
- -200= PERCENT PASSING NO. 200 U.S. STANDARD SIEVE (FM 1-T 088)
- WC= NATURAL MOISTURE CONTENT (%) (FM 1-T 265)
- LL= LIQUID LIMIT (FM 1-T 089)
- PI= PLASTICITY INDEX (FM 1-T 090)

SOILS LEGEND

- SAND
- SAND AND SILT
- SAND AND CLAY

GENERAL NOTES

STANDARD PENETRATION TEST BORINGS WERE PERFORMED IN ACCORDANCE WITH ASTM D-1586. STANDARD PENETRATION RESISTANCES ARE SHOWN ON THE BORINGS AT THE TEST DEPTHS IN BLOWS PER FOOT UNLESS OTHERWISE NOTED.

SUBSURFACE CONDITIONS SHOWN ON THE BORINGS REPRESENT THE CONDITIONS ENCOUNTERED AT THE BORING LOCATIONS. ACTUAL CONDITIONS BETWEEN BORINGS MAY VARY FROM THOSE SHOWN. UNIFIED SOIL CLASSIFICATIONS SHOWN ON THE BORINGS ARE BASED ON VISUAL EXAMINATION AND THE LABORATORY TESTING SHOWN.

GEC BORING LOCATIONS AND GROUND SURFACE ELEVATIONS WERE SURVEYED FOR HORIZONTAL AND VERTICAL CONTROL BY TBE GROUP. BORINGS ARE REFERENCED FROM THE CENTERLINE OF CONSTRUCTION OF SR 414.

BASED ON A REVIEW OF THE U.S. GEOLOGICAL SURVEY MAP ENTITLED "POTENTIOMETRIC SURFACE OF THE UPPER FLORIDAN AQUIFER IN THE SEPTEMBER 2003" FOR THE PROJECT AREA, THE MAXIMUM ELEVATION OF THE ARTESIAN HEAD IS ESTIMATED TO BE APPROXIMATELY +55 ft. NGVD. THE CONTRACTOR SHALL BE PREPARED TO HANDLE ARTESIAN HEAD LEVELS UP TO +55 ft. NAVD88.

SPLIT SPOON SAMPLER:
INSIDE DIAMETER: 1.375 IN.
OUTSIDE DIAMETER: 2.0 IN.
AVERAGE HAMMER DROP: 30 IN.
HAMMER WEIGHT: 140 LBS.
HAMMER TYPE: SAFETY (MANUAL)

ENVIRONMENTAL CLASSIFICATION:
SUPERSTRUCTURE: SLIGHTLY AGGRESSIVE

SUBSTRUCTURE:
BURIED SUBSTRUCTURE ELEMENTS
STEEL: SLIGHTLY AGGRESSIVE *
CONCRETE: SLIGHTLY AGGRESSIVE *

EXPOSED SUBSTRUCTURE ELEMENTS
STEEL: EXTREMELY AGGRESSIVE (SOIL pH=5.6)
CONCRETE: MODERATELY AGGRESSIVE (SOIL pH=5.6)

* BASED ON RODNEY POWERS, (FDOT STATE CORROSION TECHNOLOGIST), MEMORANDOM DATED 12-21-06 CONCERNING SOIL RESISTIVITY AND THAT THE SUBSTRUCTURE PILES WILL BE BURIED.

CORRELATION OF STANDARD PENETRATION RESISTANCE WITH RELATIVE DENSITY AND CONSISTENCY OF SOIL

GRANULAR SOILS	N VALUE (blows per foot)	RELATIVE DENSITY
GRANULAR SOILS	0-4 4-10 10-30 30-50 OVER 50	VERY LOOSE LOOSE MEDIUM DENSE DENSE VERY DENSE
NON-GRANULAR SOILS	N VALUE (blows per foot)	CONSISTENCY
SILTS, CLAYS, MUCK, PEAT	0-2 2-4 4-8 8-15 15-30 OVER 30	VERY SOFT SOFT FIRM STIFF VERY STIFF HARD

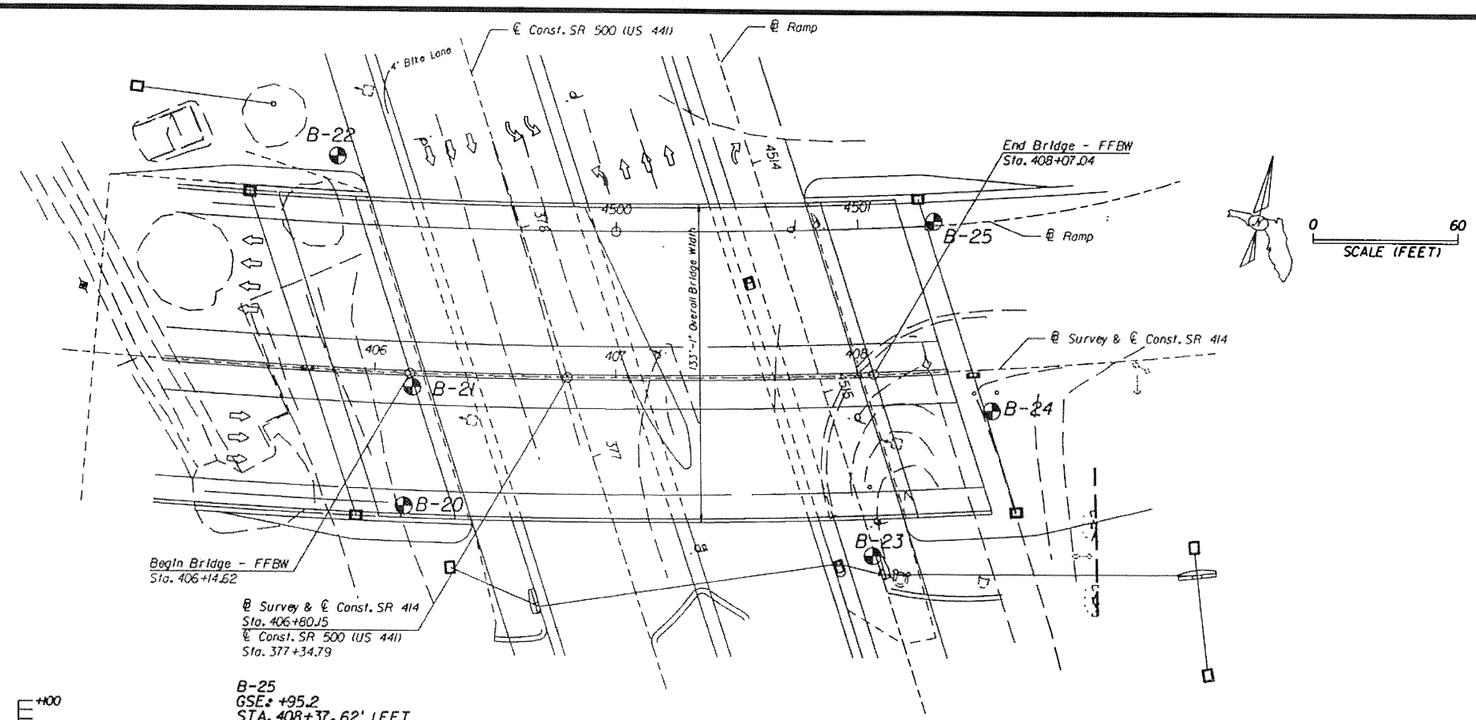

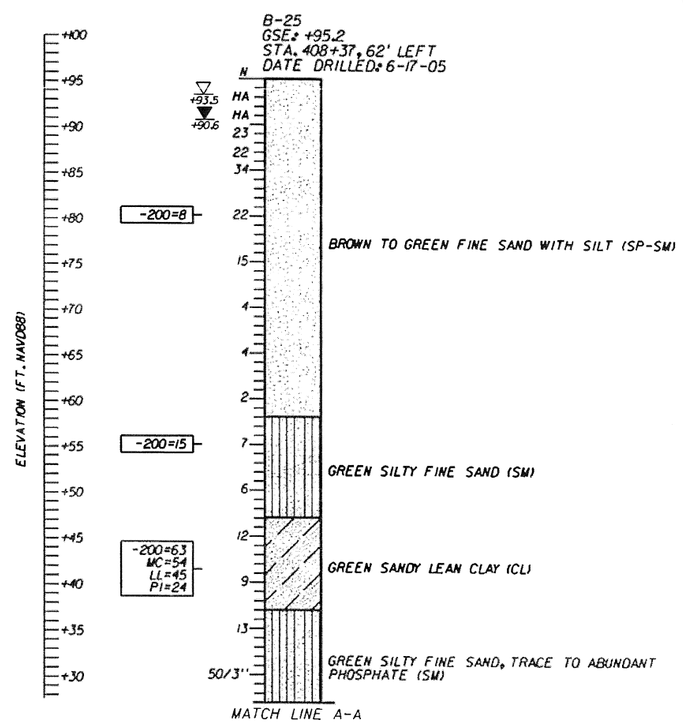

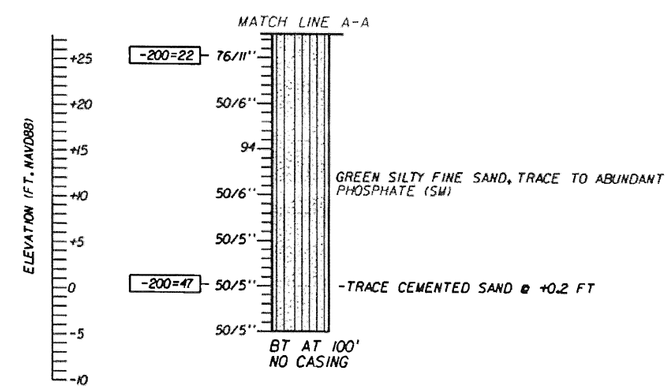

BRIDGE NO. 750743

REVISIONS

DATE	BY	DESCRIPTION	DATE	BY	DESCRIPTION

	NAMES	DATES
DRAWN BY	SKR	8-25-05
CHECKED BY	TAH	8-25-05
DESIGNED BY	TAH	8-25-05
CHECKED BY	CPM	8-25-05
APPROVED BY	CHRYSTOPHER P. MEYER, P.E.	

ENGINEER OF RECORD:
Christopher P. Meyer, P.E.
P.E. License No. 49328
Geotechnical and Environmental Consultants, Inc.
1230 E. Hillcrest Street
Orlando, FL 32803
PH (407) 898-1818 FAX (407) 898-1837
Certificate of Authorization No. 00005882

GEC

EXPRESSWAY AUTHORITY

ROAD NO.	SR 414
COUNTY	ORANGE
FINANCIAL PROJECT ID	

SHEET TITLE: REPORT OF SPT BORINGS FOR STRUCTURES

PROJECT NAME: SR 414 BRIDGE OVER US HWY 441
MAITLAND BOULEVARD EXTENSION

SHEET NO. B3-7

FILE: J:\DATA\D37\21386\borings\r.dgn

NOTICE: THE OFFICIAL RECORD OF THIS SHEET IS THE ELECTRONIC FILE SIGNED AND SEALED UNDER RULE 61G15-23.003, F.A.C.

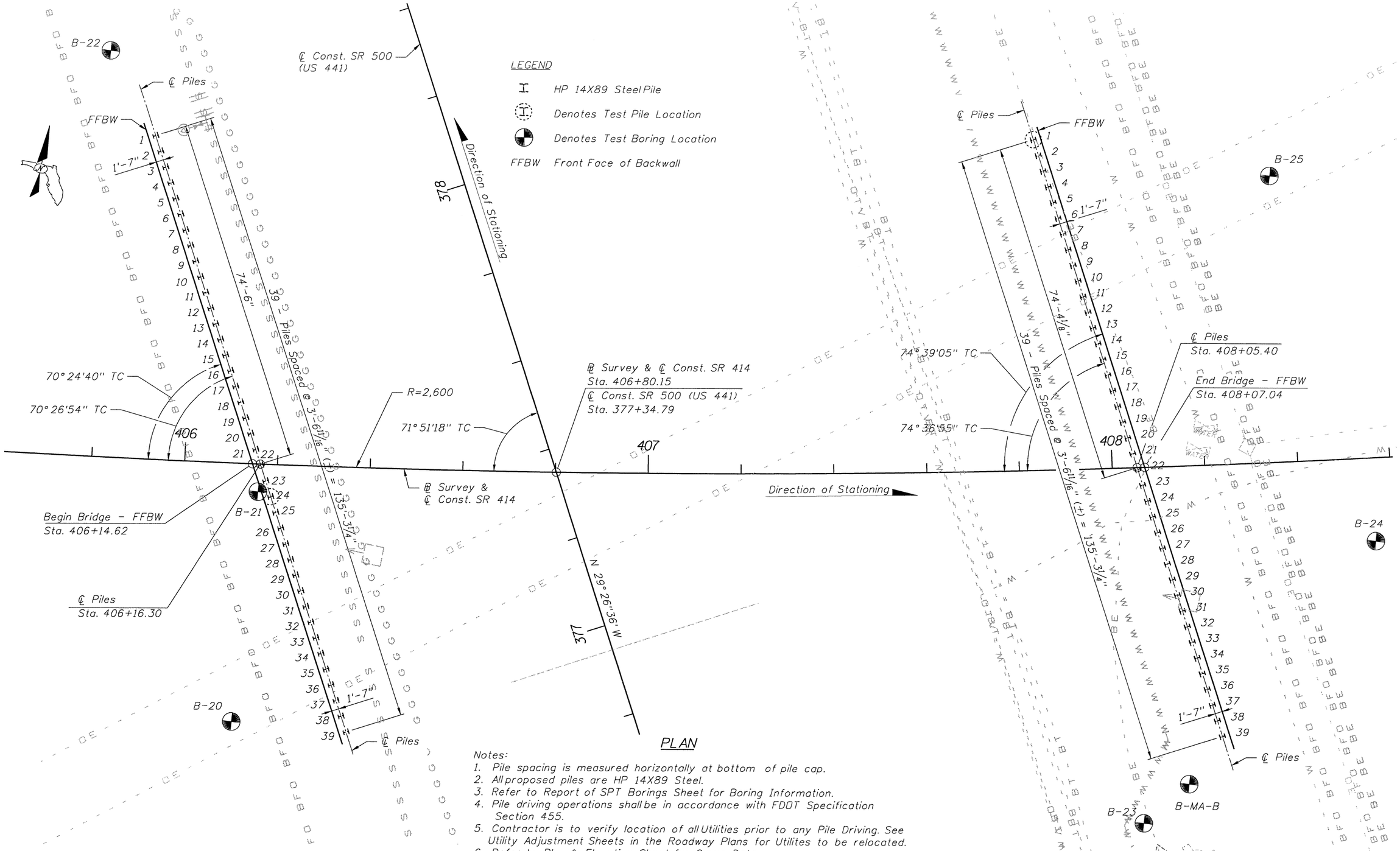

PLAN

Notes:

1. Pile spacing is measured horizontally at bottom of pile cap.
2. All proposed piles are HP 14X89 Steel.
3. Refer to Report of SPT Borings Sheet for Boring Information.
4. Pile driving operations shall be in accordance with FDOT Specification Section 455.
5. Contractor is to verify location of all Utilities prior to any Pile Driving. See Utility Adjustment Sheets in the Roadway Plans for Utilites to be relocated.
6. Refer to Plan & Elevation Sheet for Curve Data.

BRIDGE NO. 750743

REVISIONS

DATE	BY	DESCRIPTION	DATE	BY	DESCRIPTION

	NAMES	DATES
DRAWN BY	CAL	01-07
CHECKED BY	TED	01-07
DESIGNED BY	NJB	01-07
CHECKED BY	TED	01-07
APPROVED BY	T.E. Davidson P.E.	

ENGINEER OF RECORD:
PARSONS
2420 LAKEMONT AVE., SUITE 450, ORLANDO, FL 32814
PHONE: (407) 702-6800
CERTIFICATE OF AUTHORIZATION NO. 1838
THOMAS E. DAVIDSON, P.E. LIC. NO. 47131

EXPRESSWAY AUTHORITY

ROAD NO.	SR 414
COUNTY	ORANGE
FINANCIAL PROJECT ID	414-211

SHEET TITLE: FOUNDATION LAYOUT (1 OF 2)

PROJECT NAME: MAITLAND BLVD. EXTENSION
SR 414 OVER SR 500 (US 441)

SHEET NO. B3-8

p0031062 3/26/2007 11:11:26 AM P:\646262\V646262\struct\3SR441\b3FoundLay01.dgn

PARSONS

PILE DATA TABLE

INSTALLATION CRITERIA								DESIGN CRITERIA						
PIER or BENT NUMBER	PILE SIZE (in)	NOMINAL BEARING CAPACITY (tons)	TENSION CAPACITY (tons)	MINIMUM TIP ELEVATION (ft)	TEST PILE LENGTH (ft)	REQUIRED JET ELEVATION (ft)	REQUIRED PREFORM ELEVATION (ft)	FACTORED DESIGN LOAD (tons)	DOWN DRAG (tons)	TOTAL SCOUR RESISTANCE (tons)	NET SCOUR RESISTANCE (tons)	100-YEAR SCOUR ELEVATION (ft)	LONG TERM SCOUR ELEVATION (ft)	RESISTANCE FACTOR-ϕ
EB-1	HP 14X89	154	NA	+45	125	NA	+85	100	NA	NA	NA	NA	NA	.65
EB-2	HP 14X89	154	NA	+45	125	NA	+85	100	NA	NA	NA	NA	NA	.65

$$\frac{\text{Factored Design Load} + \text{Net Scour} + \text{Down Drag}}{\phi} \leq \text{Nominal Bearing Resistance}$$

PILE CUT OFF ELEVATIONS (END BENTS)

Pile No.	1	2	3	4	5	6	7	8	9	10	11	12	13	14	15	16	17	18	19	20
End Bent 1	113.9	114.1	114.3	114.5	114.6	114.8	115.0	115.2	115.4	115.5	115.7	115.9	116.1	116.3	116.4	116.6	116.8	117.0	117.2	117.3
End Bent 2	112.5	112.6	112.8	113.0	113.2	113.4	113.5	113.7	113.9	114.1	114.2	114.4	114.6	114.8	115.0	115.1	115.3	115.5	115.7	115.9

PILE CUT OFF ELEVATIONS (END BENTS)

Pile No.	21	22	23	24	25	26	27	28	29	30	31	32	33	34	35	36	37	38	39
End Bent 1	117.5	117.7	117.9	118.0	118.2	118.4	118.6	118.8	118.9	119.1	119.3	119.5	119.7	119.8	120.0	120.2	120.4	120.6	120.7
End Bent 2	116.0	116.2	116.4	116.6	116.7	116.9	117.1	117.3	117.5	117.6	117.8	118.0	118.2	118.3	118.5	118.7	118.9	119.1	119.2

PILE INSTALLATION NOTES:

No jetting will be allowed without the approval of the Engineer.

Note:
The Contractor shall provide surveys and vibration monitoring of all structures within 200 feet of Pile Driving Operations and the Northrop Grumman plant located at 2787 S. Orange Blossom Trail.
* Predriving surveys for all structures listed shall be completed prior to the start of any foundation work. The survey and vibration monitoring procedures shall meet the requirements of Section 455-1.1. The Contractor shall also monitor for settlement as required in Section 455-1.1. The Contractor's survey shall include all rooms and floors of the structures listed.

BRIDGE NO. 750743

REVISIONS

DATE	BY	DESCRIPTION	DATE	BY	DESCRIPTION

	NAMES	DATES
DRAWN BY	CAL	01-07
CHECKED BY	TED	01-07
DESIGNED BY	NJB	01-07
CHECKED BY	TED	01-07
APPROVED BY	T.E. Davidson P.E.	

ENGINEER OF RECORD:
PARSONS
2420 LAKEMONT AVE., SUITE 450, ORLANDO, FL 32814
PHONE: (407) 702-6800
CERTIFICATE OF AUTHORIZATION NO. 1838
THOMAS E. DAVIDSON, P.E. LIC. NO. 47131

EXPRESSWAY AUTHORITY

ROAD NO.	SR 414
COUNTY	ORANGE
FINANCIAL PROJECT ID	414-211

SHEET TITLE: FOUNDATION LAYOUT (2 OF 2)

PROJECT NAME: MAITLAND BLVD. EXTENSION
SR 414 OVER SR 500 (US 441)

SHEET NO. B3-9

PARSONS

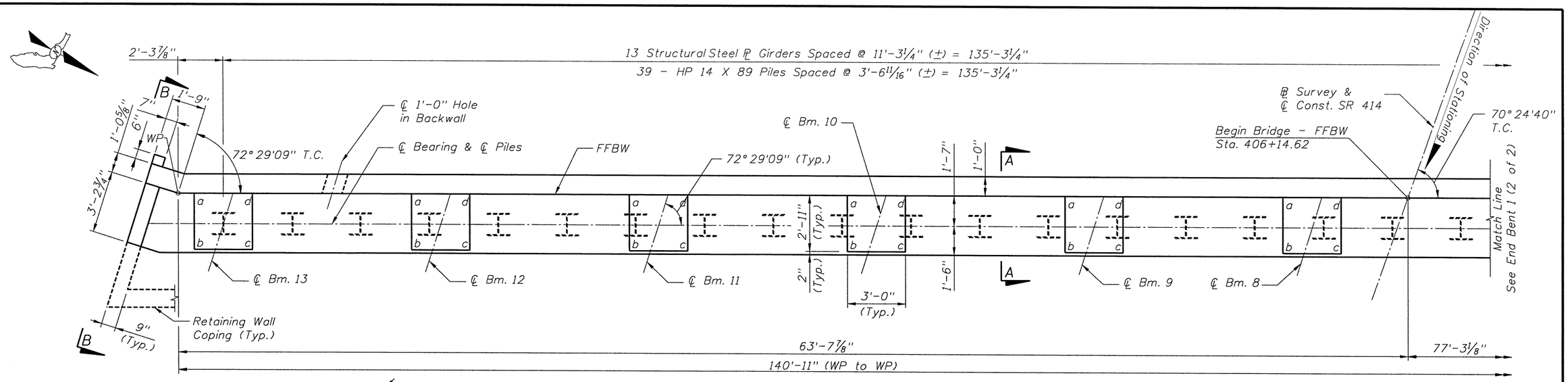

PLAN

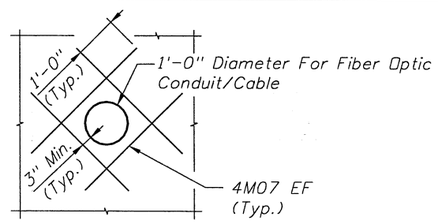

DETAIL

PEDESTAL ELEVATIONS - END BENT 1					
Beam No.	Pedestal El. (ft)	"a" El. (ft)	"b" El. (ft)	"c" El. (ft)	"d" El. (ft)
8	120.765	120.780	120.758	120.751	120.773
9	121.331	121.347	121.325	121.318	121.340
10	121.898	121.913	121.892	121.884	121.906
11	122.465	122.480	122.458	122.451	122.473
12	123.031	123.047	123.025	123.018	123.040
13	123.598	123.614	123.592	123.585	123.606

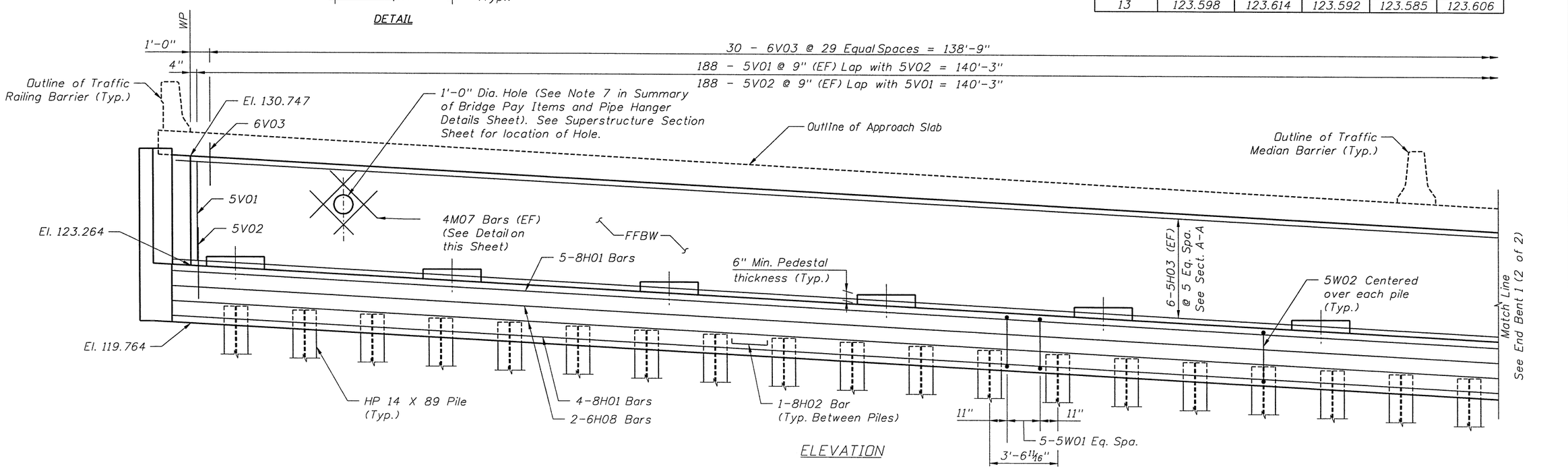

ELEVATION

BRIDGE NO. 750743

REVISIONS					
DATE	BY	DESCRIPTION	DATE	BY	DESCRIPTION

	NAMES	DATES
DRAWN BY	CAL	01-07
CHECKED BY	HGL	01-07
DESIGNED BY	NJB	01-07
CHECKED BY	STP	01-07
APPROVED BY	T.E. Davidson P.E.	

ENGINEER OF RECORD:
PARSONS
2420 LAKEMONT AVE., SUITE 450, ORLANDO, FL 32814
PHONE: (407) 702-6800
CERTIFICATE OF AUTHORIZATION NO. 1838
THOMAS E. DAVIDSON, P.E. LIC. NO. 47131

EXPRESSWAY AUTHORITY

ROAD NO.	SR 414
COUNTY	ORANGE
FINANCIAL PROJECT ID	414-211

SHEET TITLE: END BENT 1 (1 OF 2)

PROJECT NAME: MAITLAND BLVD. EXTENSION SR 414 OVER SR 500 (US 441)

SHEET NO. B3-10

p0031062 3/28/2007 2:11:44 PM P:\646262\646262\struct\3SR441\b3endbent01.dgn

PARSONS

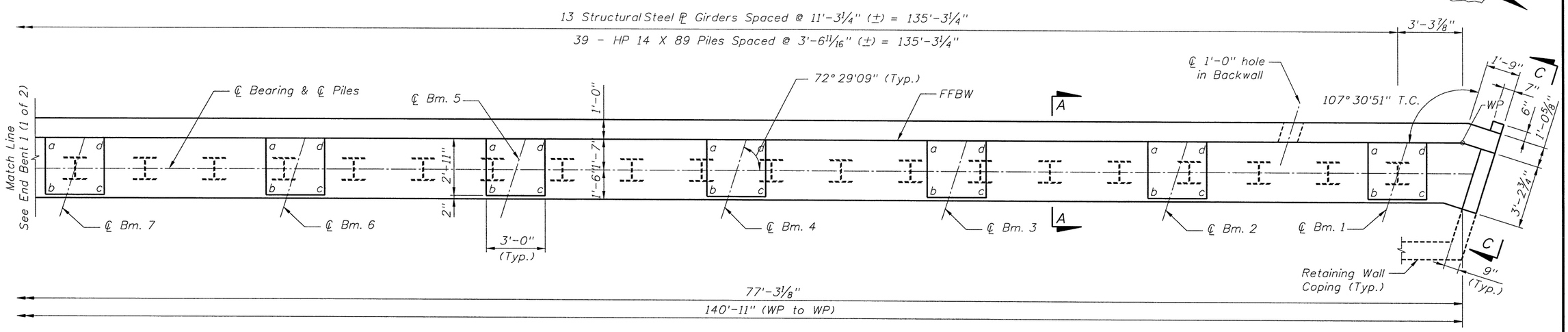

PLAN

PEDESTAL ELEVATIONS - END BENT 1					
Beam No.	Pedestal El. (ft)	"a" El. (ft)	"b" El. (ft)	"c" El. (ft)	"d" El. (ft)
1	116.795	116.804	116.782	116.789	116.811
B3-11	117.363	117.371	117.349	117.356	117.378
3	117.930	117.938	117.916	117.923	117.945
4	118.497	118.505	118.484	118.491	118.512
5	119.064	119.072	119.050	119.058	119.079
6	119.631	119.639	119.617	119.624	119.646
7	120.198	120.206	120.184	120.191	120.213

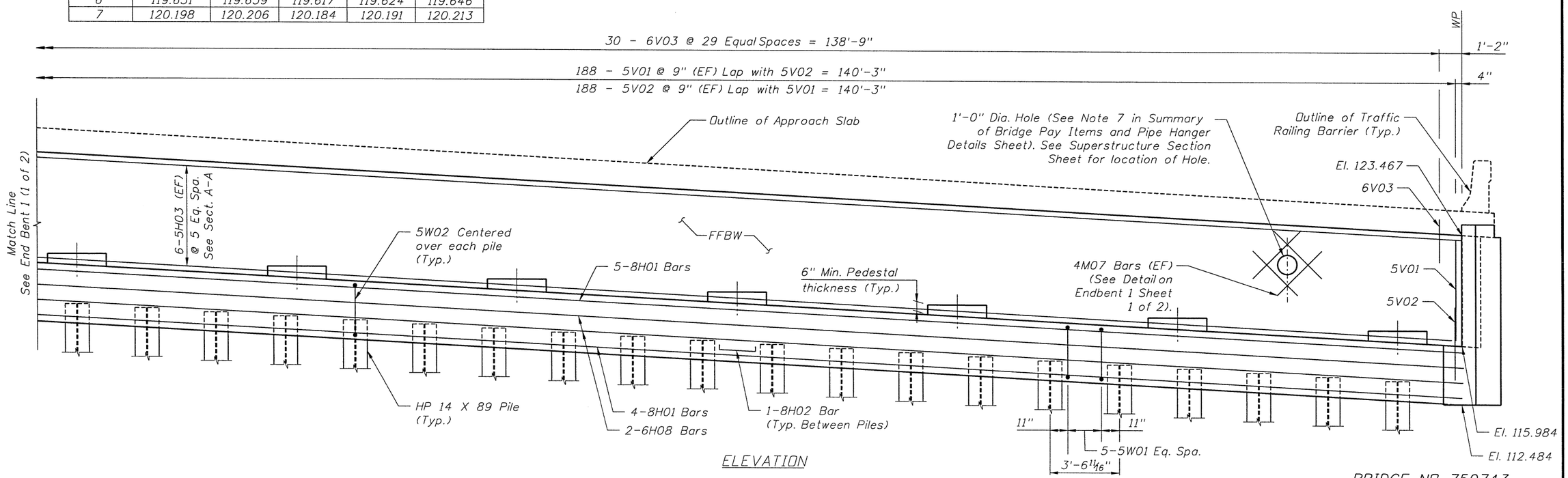

ELEVATION

BRIDGE NO. 750743

REVISIONS					
DATE	BY	DESCRIPTION	DATE	BY	DESCRIPTION

	NAMES	DATES
DRAWN BY	CAL	01-07
CHECKED BY	HGL	01-07
DESIGNED BY	NJB	01-07
CHECKED BY	STP	01-07
APPROVED BY	T.E. Davidson P.E.	

ENGINEER OF RECORD:
PARSONS
2420 LAKEMONT AVE., SUITE 450, ORLANDO, FL 32814
PHONE: (407) 702-6800
CERTIFICATE OF AUTHORIZATION NO. 1838
THOMAS E. DAVIDSON, P.E. LIC. NO. 47131

EXPRESSWAY AUTHORITY

ROAD NO.	SR 414
COUNTY	ORANGE
FINANCIAL PROJECT ID	414-211

SHEET TITLE: END BENT 1 (2 OF 2)

PROJECT NAME: MAITLAND BLVD. EXTENSION SR 414 OVER SR 500 (US 441)

SHEET NO. B3-11

p0031062 3/28/2007 8:09:27 AM P:\646262\646262\struct\3SR441\b3endbent02.dgn

PARSONS

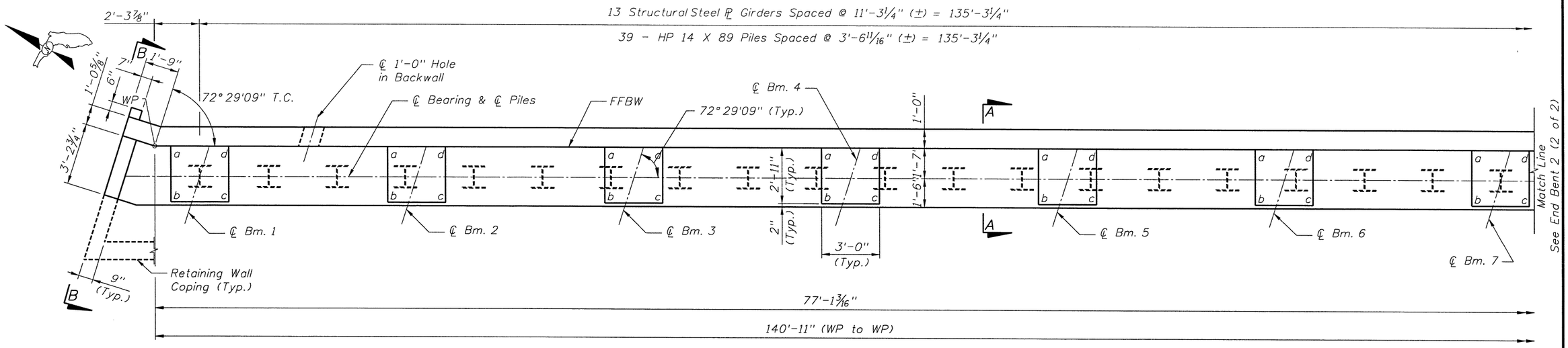

PLAN

PEDESTAL ELEVATIONS - END BENT 2					
Beam No.	Pedestal El. (ft)	"a" El. (ft)	"b" El. (ft)	"c" El. (ft)	"d" El. (ft)
1	115.333	115.325	115.346	115.339	115.318
2	115.897	115.888	115.910	115.903	115.881
3	116.460	116.452	116.474	116.467	116.445
4	117.024	117.016	117.037	117.030	117.009
5	117.588	117.580	117.601	117.594	117.573
6	118.152	118.144	118.165	118.158	118.137
7	118.716	118.708	118.730	118.723	118.701

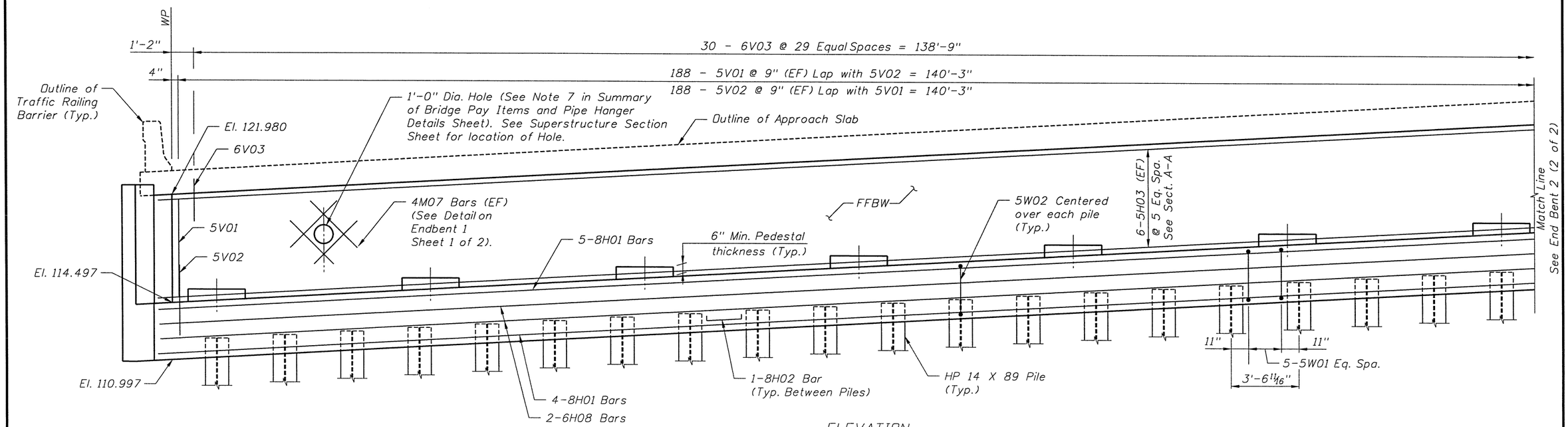

ELEVATION

BRIDGE NO. 750743

REVISIONS

DATE	BY	DESCRIPTION	DATE	BY	DESCRIPTION

	NAMES	DATES
DRAWN BY	CAL	01-07
CHECKED BY	HGL	01-07
DESIGNED BY	NJB	01-07
CHECKED BY	STP	01-07
APPROVED BY	T.E. Davidson P.E.	

ENGINEER OF RECORD:
PARSONS
2420 LAKEMONT AVE., SUITE 450, ORLANDO, FL 32814
PHONE: (407) 702-6800
CERTIFICATE OF AUTHORIZATION NO. 1838
THOMAS E. DAVIDSON, P.E. LIC. NO. 47131

EXPRESSWAY AUTHORITY

ROAD NO.	SR 414
COUNTY	ORANGE
FINANCIAL PROJECT ID	414-211

SHEET TITLE: END BENT 2 (1 OF 2)

PROJECT NAME: MAITLAND BLVD. EXTENSION SR 414 OVER SR 500 (US 441)

SHEET NO. B3-12

p0031062 3/28/2007 2:47:13 PM P:\646262\646262\struct\3SR441\b3endbent03.dgn

PARSONS

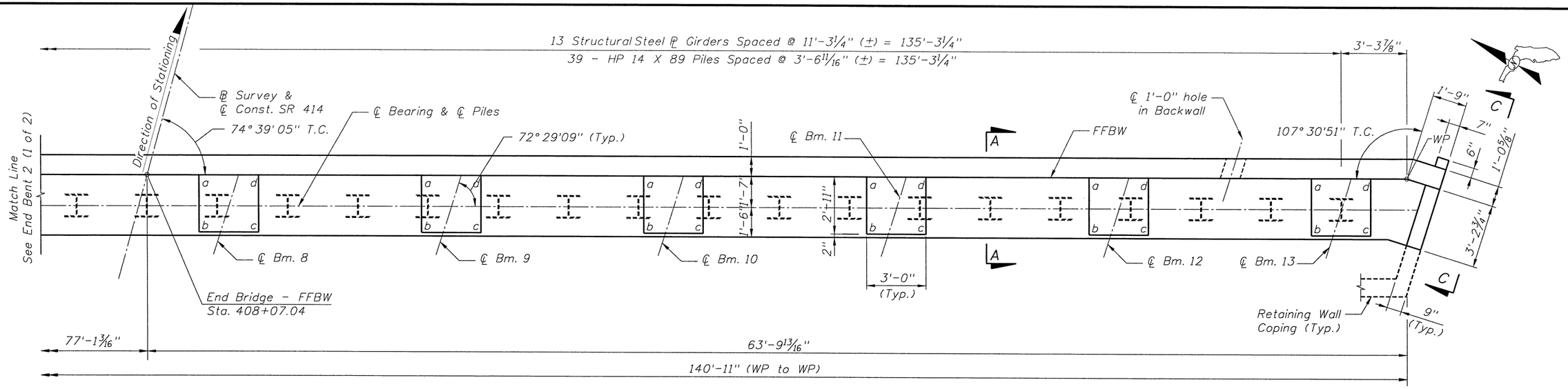

PLAN

PEDESTAL ELEVATIONS - END BENT 2					
Beam No.	Pedestal El. (ft)	"a" El. (ft)	"b" El. (ft)	"c" El. (ft)	"d" El. (ft)
8	119.281	119.265	119.287	119.294	119.272
9	119.845	119.830	119.852	119.859	119.837
10	120.410	120.394	120.416	120.423	120.401
11	120.975	120.959	120.981	120.988	120.966
12	121.540	121.524	121.546	121.553	121.531
13	122.105	122.089	122.111	122.118	122.096

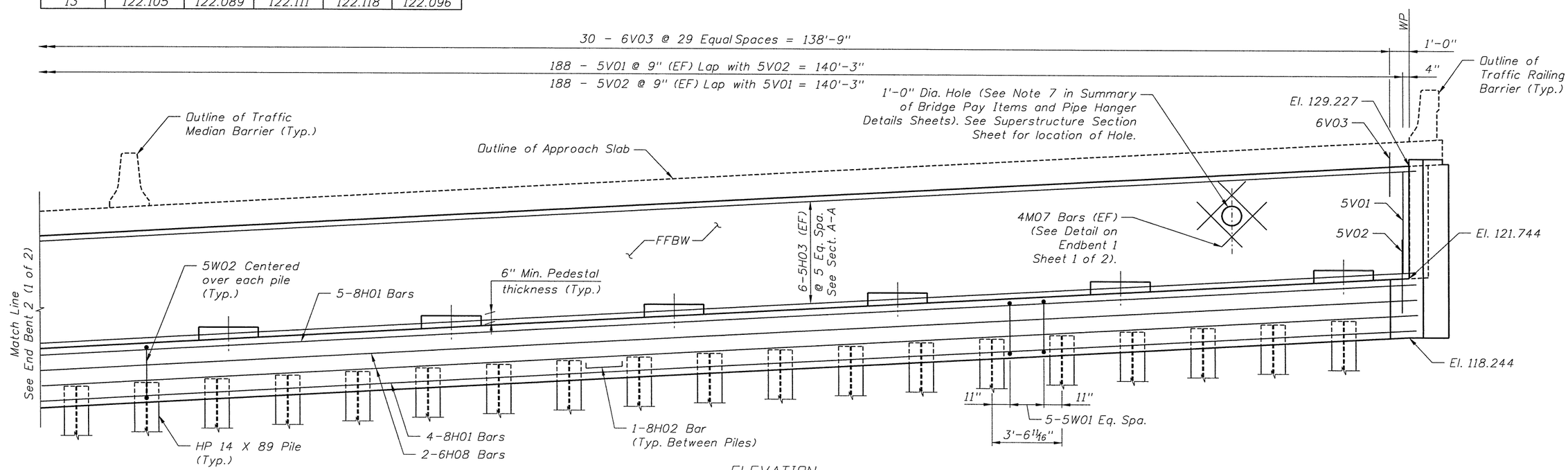

ELEVATION

BRIDGE NO. 750743

REVISIONS					
DATE	BY	DESCRIPTION	DATE	BY	DESCRIPTION

	NAMES	DATES
DRAWN BY	CAL	01-07
CHECKED BY	HGL	01-07
DESIGNED BY	NJB	01-07
CHECKED BY	STP	01-07
APPROVED BY	T.E. Davidson P.E.	

ENGINEER OF RECORD.
PARSONS
2420 LAKEMONT AVE., SUITE 450, ORLANDO, FL 32814
PHONE: (407) 702-6800
CERTIFICATE OF AUTHORIZATION NO. 1838
THOMAS E. DAVIDSON, P.E. LIC. NO. 47131

EXPRESSWAY AUTHORITY

ROAD NO.	SR 414
COUNTY	ORANGE
FINANCIAL PROJECT ID	414-211

SHEET TITLE.
END BENT 2
(2 OF 2)

PROJECT NAME.
MAITLAND BLVD. EXTENSION
SR 414 OVER SR 500 (US 441)

SHEET NO.
B3-13

p0031062 3/28/2007 8:11:51 AM P:\646262\646262\struct\3SR441\b3endbent04.dgn

PARSONS

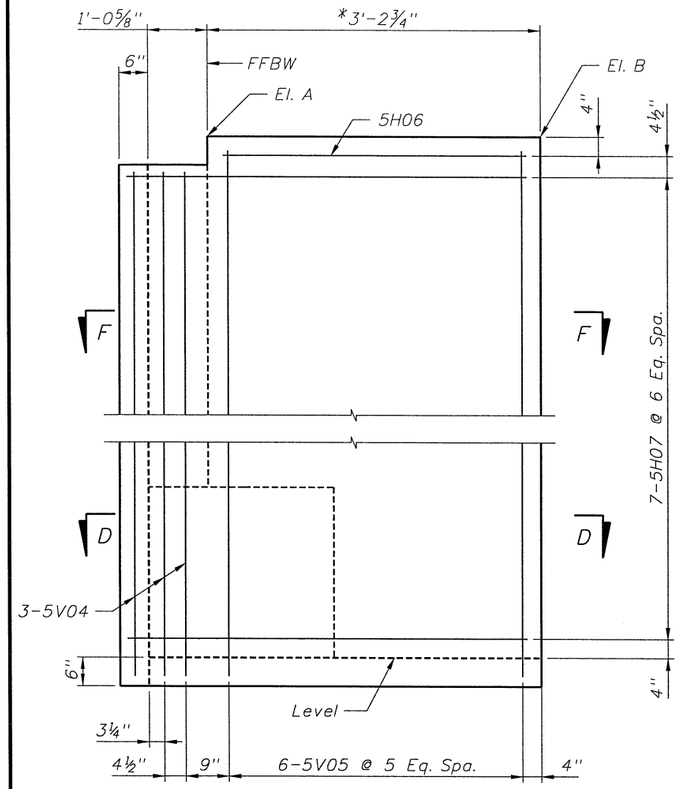

VIEW B-B

* Note: These Dimensions may vary due to construction tolerances and Proprietary Wall Manufacturer.

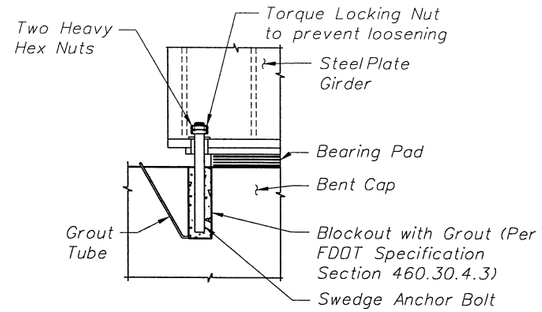

ANCHOR BOLT DETAIL FOR COMPOSITE NEOPRENE BEARING PAD

(See Note 3 and Notes on Non-Standard Composite Elastomeric Bearing Pad Sheet)

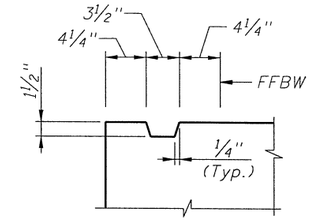

CONST. JOINT KEY DETAIL

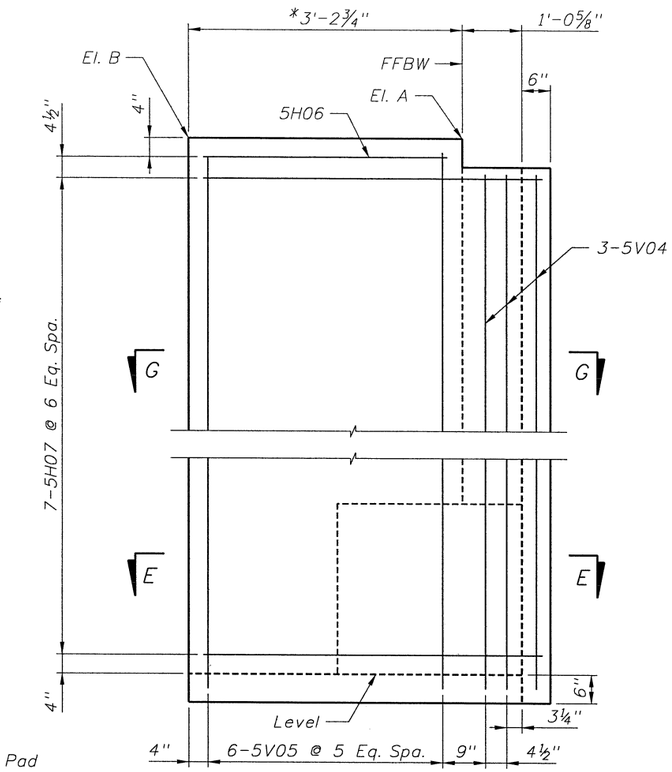

VIEW C-C

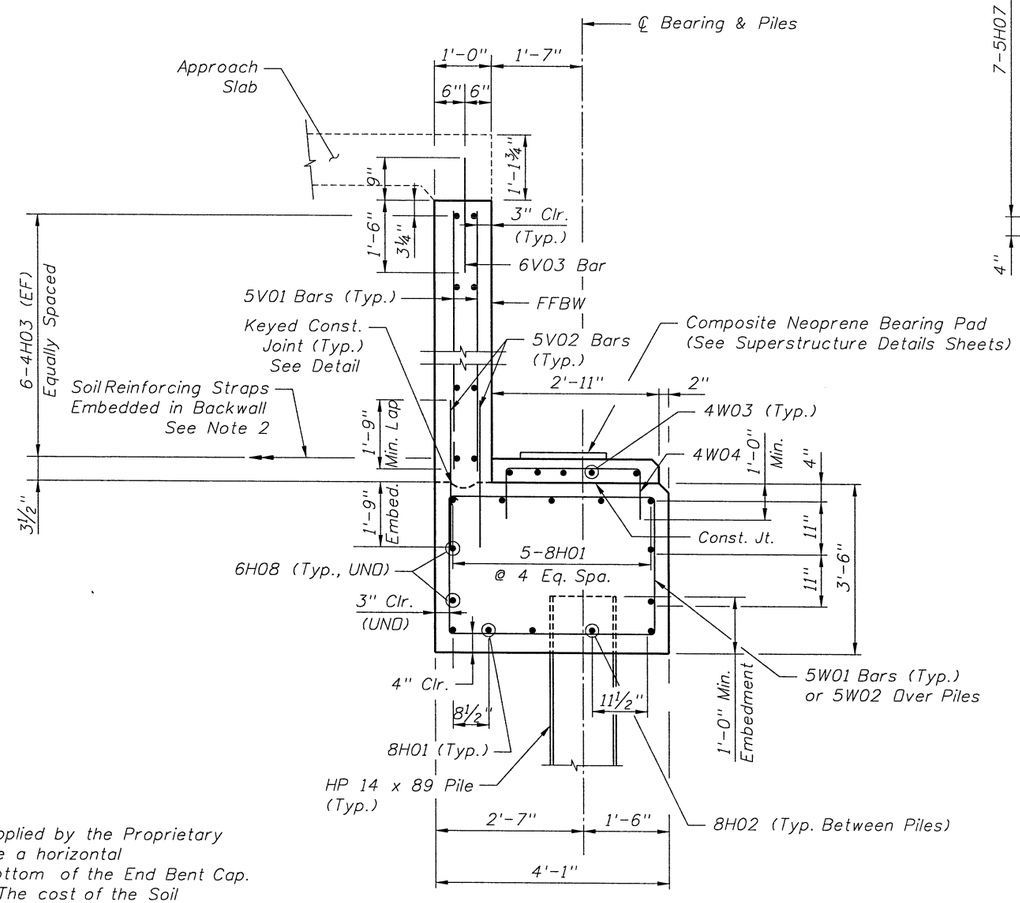

SECTION A-A

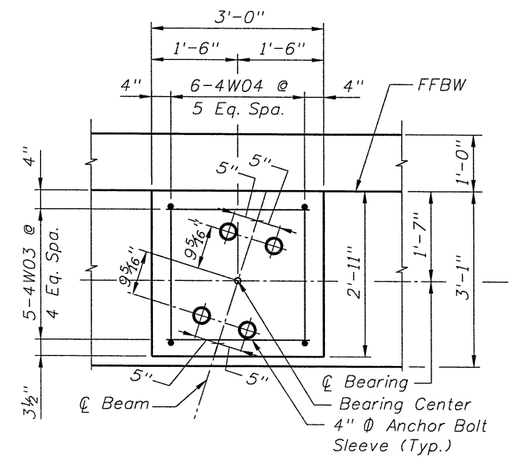

PEDESTAL DETAIL

Notes:
See End bent Sheets for Elevations.

CURTAIN WALL DATA			
End Bent	Side Looking Upstation	A	B
No. 1	Rt.	131.101	131.061
	Lt.	123.821	123.792
No. 2	Lt.	122.334	122.385
	Rt.	129.581	129.625

Notes:
1. Work this Sheet with End Bent Sheets.
2. The End Bent is Supported on Plumb Piles only. Soil Reinforcement supplied by the Proprietary Wall Manufacturer shall be embedded in the End Bent Backwall to provide a horizontal Resistance of 4.24 K/Ft. (6.45 K/Ft. Factored) at 4'-6" above the bottom of the End Bent Cap. The soil reinforcement shall be oriented perpendicular to the Backwall. The cost of the Soil Reinforcement is to be included in the cost of Retaining Wall System.
3. Blockout Hole Shall be free of debris prior to grouting. The Blockout shall be grouted with a non-shrink grout conforming to the specification and having a minimum compressive strength (at 3 days) of 5000 P.S.I. Shift rebars as necessary to avoid conflicts with Blockout Holes.

BRIDGE NO. 750743

REVISIONS

DATE	BY	DESCRIPTION	DATE	BY	DESCRIPTION

	NAMES	DATES
DRAWN BY	CAL	01-07
CHECKED BY	HGL	01-07
DESIGNED BY	NJB	01-07
CHECKED BY	TED	01-07
APPROVED BY	T.E. Davidson P.E.	

ENGINEER OF RECORD: PARSONS
2420 LAKEMONT AVE., SUITE 450, ORLANDO, FL 32814
PHONE: (407) 702-6800
CERTIFICATE OF AUTHORIZATION NO. 1838
THOMAS E. DAVIDSON, P.E. LIC. NO. 47131

EXPRESSWAY AUTHORITY

ROAD NO.	SR 414
COUNTY	ORANGE
FINANCIAL PROJECT ID	414-211

SHEET TITLE: END BENT DETAILS (1 OF 2)

PROJECT NAME: MAITLAND BLVD. EXTENSION SR 414 OVER SR 500 (US 441)

SHEET NO. B3-14

p0031062 3/28/2007 8:13:00 AM P:\646262\646262\struct\SR441\b3endbentdet01.dgn

PARSONS

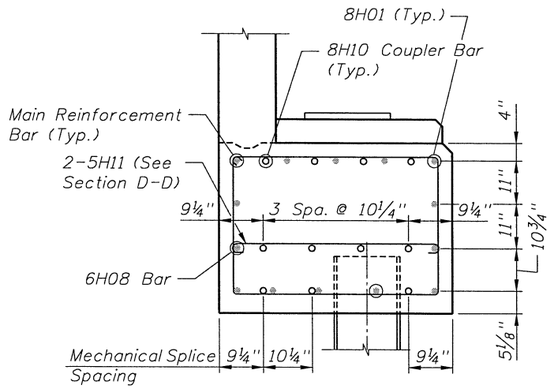

END BENT SECTION SHOWING COUPLER BARS

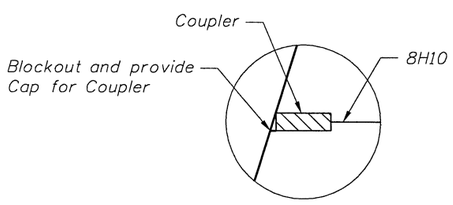

BLOCKOUT DETAIL

Note:
Remove Cap and Grout if not used for Arch Pylon Connection.

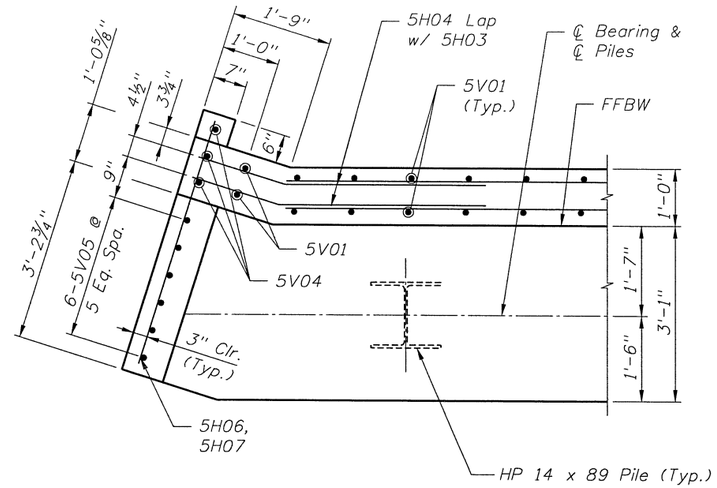

SECTION F-F

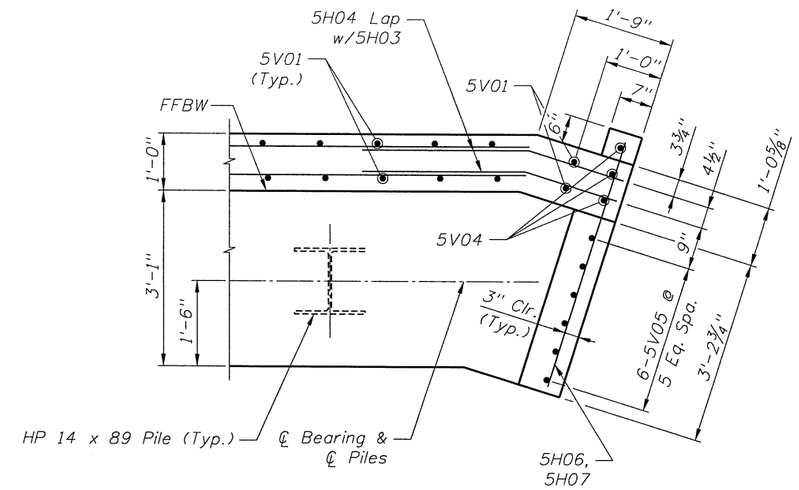

SECTION G-G

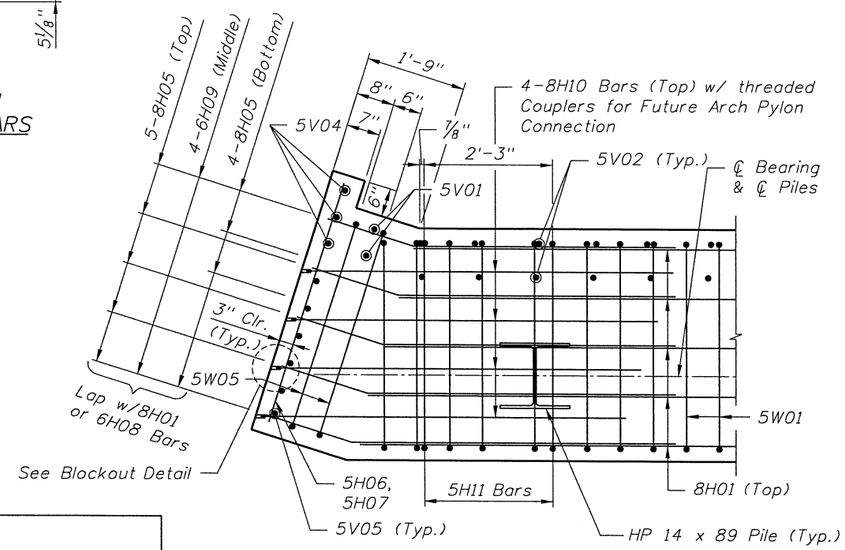

SECTION D-D

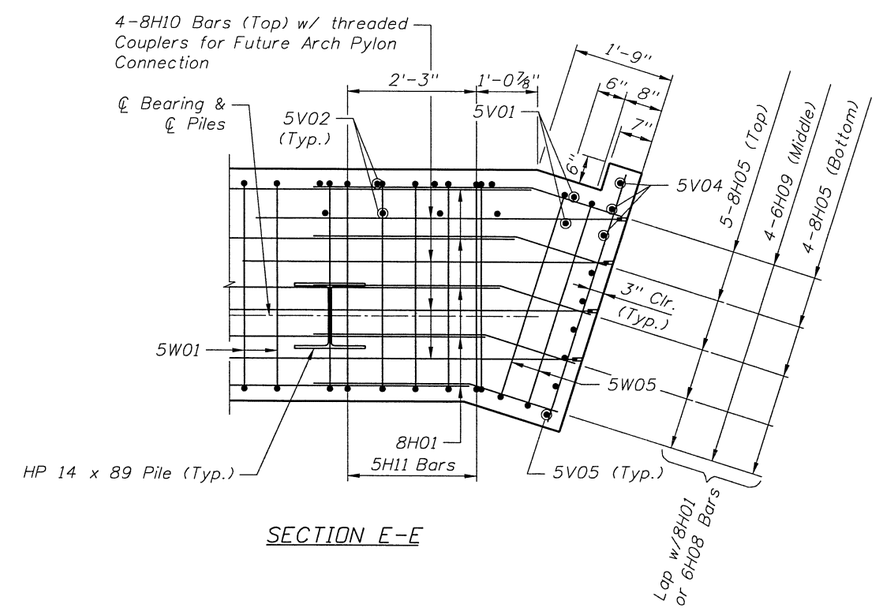

SECTION E-E

ESTIMATED QUANTITIES				
ITEM		UNIT	QUANTITY	
			EB 1	EB 2
Class IV Concrete (Substructure)	Pedestals	CY	2.4574	2.4574
	Cap		76.5321	76.5321
	Walls		42.44	42.44
	Total		121.5	121.5
Reinforcing Steel (Substructure)		LB	16,145	16,145
HP 14 x 89 Piles		LF	*	*

*See Summary Of Bridge Pay Items
Note: Piles quantities do not include test Piles

BRIDGE NO. 750743

REVISIONS					
DATE	BY	DESCRIPTION	DATE	BY	DESCRIPTION

	NAMES	DATES
DRAWN BY	CAL	01-07
CHECKED BY	HGL	01-07
DESIGNED BY	NJB	01-07
CHECKED BY	TED	01-07
APPROVED BY	T.E. Davidson P.E.	

ENGINEER OF RECORD:
PARSONS
2420 LAKEMONT AVE., SUITE 450, ORLANDO, FL 32814
PHONE: (407) 702-6800
CERTIFICATE OF AUTHORIZATION NO. 1838
THOMAS E. DAVIDSON, P.E. LIC. NO. 47131

EXPRESSWAY AUTHORITY

ROAD NO.	SR 414
COUNTY	ORANGE
FINANCIAL PROJECT ID	414-211

SHEET TITLE: END BENT DETAILS (2 OF 2)

PROJECT NAME: MAITLAND BLVD. EXTENSION SR 414 OVER SR 500 (US 441)

SHEET NO. B3-15

p0031062 3/28/2007 8:14:46 AM P:\646262\646262\struct\3SR441\b3endbentdet02.dgn

PARSONS

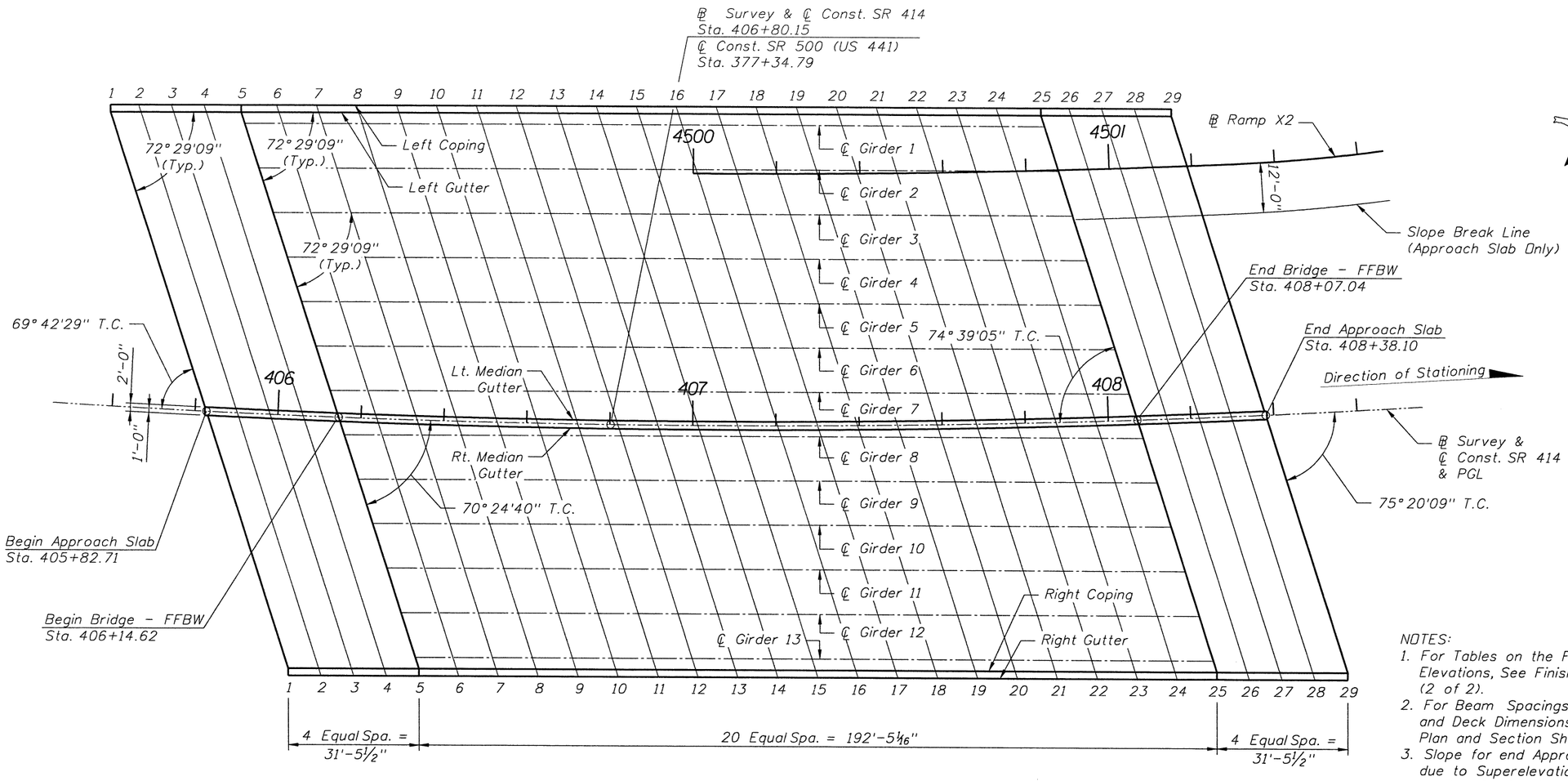

NOTES:

1. For Tables on the Finished Grade Elevations, See Finish Grade Elevations (2 of 2).
2. For Beam Spacings and Dimensions, and Deck Dimensions, See Superstructure Plan and Section Sheets & Framing Plans.
3. Slope for end Approach Slab varies due to Superelevation Transition, refer to Plan & Elevation sheet for diagram.

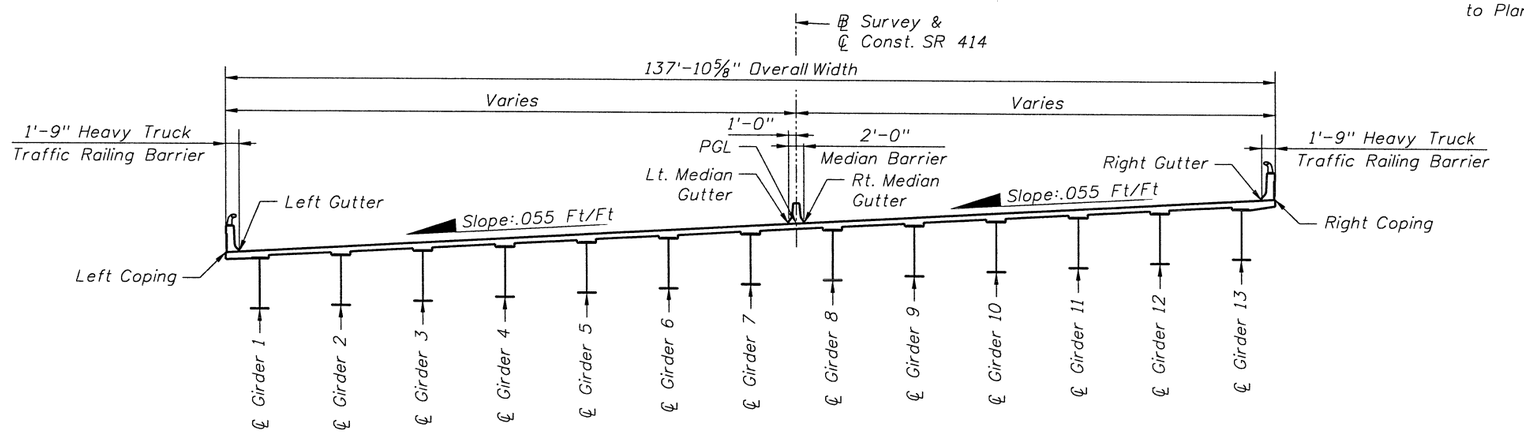

SECTION

BRIDGE NO. 750743

REVISIONS					
DATE	BY	DESCRIPTION	DATE	BY	DESCRIPTION

	NAMES	DATES
DRAWN BY	CAL	01-07
CHECKED BY	TED	01-07
DESIGNED BY	NJB	01-07
CHECKED BY	STP	01-07
APPROVED BY	T.E. Davidson P.E.	

ENGINEER OF RECORD:
PARSONS
2420 LAKEMONT AVE., SUITE 450, ORLANDO, FL 32814
PHONE: (407) 702-6800
CERTIFICATE OF AUTHORIZATION NO. 1838
THOMAS E. DAVIDSON, P.E. LIC. NO. 47131

EXPRESSWAY AUTHORITY

ROAD NO.	SR 414
COUNTY	ORANGE
FINANCIAL PROJECT ID	414-211

SHEET TITLE: FINISH GRADE ELEVATIONS (1 OF 2)

PROJECT NAME: MAITLAND BLVD. EXTENSION SR 414 OVER SR 500 (US 441)

SHEET NO. B3-16

33259 1/5/2007 4:15:42 PM P:\646262\646262\struct\3SR441\b3FInlshGrELD1.dgn

PARSONS

FINISH GRADE ELEVATIONS (NAVD)
APPROACH SLAB (BEGIN)

POINTS	BEGIN SLAB				FFBW EB 1
	1	2	3	4	5
Left Coping	124.807	124.761	124.713	124.665	124.613
Left Gutter	124.899	124.853	124.806	124.758	124.709
Lt. Median Gutter	128.670	128.641	128.611	128.578	128.542
PGL	128.724	128.695	128.664	128.631	128.596
Rt. Median Gutter	128.777	128.749	128.718	128.685	128.649
Right Gutter	132.001	131.951	131.900	131.849	131.796
Right Coping	132.094	132.044	131.993	131.941	131.893

FINISH GRADE ELEVATIONS (NAVD)
APPROACH SLAB (END)

POINTS	FFBW EB 2				END SLAB
	25	26	27	28	29
Left Coping	123.126	123.055	122.912	122.768	122.627
Left Gutter	123.221	123.142	123.004	123.866	122.729
Slope Break Line	124.534	124.448	124.360	124.269	124.176
Lt. Median Gutter	127.027	126.939	126.849	126.756	126.662
PGL	127.079	126.991	126.900	126.808	126.714
Rt. Median Gutter	127.131	127.042	126.952	126.860	126.766
Right Gutter	130.277	130.205	130.132	130.059	129.985
Right Coping	130.373	130.297	130.224	130.151	130.077

FINISH GRADE ELEVATIONS (NAVD)

POINTS	FFBW EB 1										Mid - Span										FFBW EB 2
	5	6	7	8	9	10	11	12	13	14	15	16	17	18	19	20	21	22	23	24	25
Left Coping	124.613	124.555	124.493	124.429	124.364	124.297	124.229	124.159	124.089	124.016	123.943	123.868	123.791	123.713	123.634	123.554	123.472	123.388	123.304	123.218	123.126
Left Gutter	124.709	124.648	124.585	124.521	124.456	124.389	124.321	124.251	124.180	124.108	124.035	123.959	123.883	123.805	123.726	123.645	123.563	123.480	123.395	123.309	123.222
℄ Girder 1	124.851	124.790	124.727	124.663	124.598	124.531	124.463	124.393	124.322	124.250	124.176	124.101	124.024	123.946	123.867	123.787	123.705	123.621	123.537	123.450	123.363
℄ Girder 2	125.418	125.357	125.294	125.229	125.163	125.096	125.028	124.958	124.887	124.814	124.740	124.665	124.588	124.510	124.431	124.350	124.268	124.185	124.100	124.014	123.927
℄ Girder 3	125.986	125.924	125.860	125.795	125.729	125.662	125.593	125.523	125.452	125.379	125.305	125.229	125.152	125.074	124.995	124.914	124.832	124.748	124.664	124.578	124.490
℄ Girder 4	126.553	126.490	126.427	126.362	126.295	126.227	126.158	126.088	126.016	125.943	125.869	125.794	125.717	125.638	125.559	125.478	125.396	125.312	125.227	125.141	125.054
℄ Girder 5	127.120	127.057	126.993	126.928	126.861	126.793	126.724	126.653	126.581	126.508	126.434	126.358	126.281	126.202	126.123	126.042	125.960	125.876	125.791	125.705	125.618
℄ Girder 6	127.687	127.624	127.559	127.494	127.427	127.359	127.289	127.218	127.146	127.073	126.998	126.922	126.845	126.767	126.687	126.606	126.524	126.440	126.355	126.269	126.182
℄ Girder 7	128.254	128.190	128.126	128.060	127.993	127.924	127.854	127.783	127.711	127.638	127.563	127.487	127.409	127.331	127.251	127.170	127.088	127.004	126.919	126.833	126.746
Lt. Median Gutter	128.542	128.497	128.449	128.397	128.342	128.284	128.222	128.158	128.090	128.019	127.945	127.868	127.787	127.703	127.616	127.526	127.433	127.336	127.236	127.133	127.027
PGL	128.596	128.550	128.502	128.450	128.395	128.337	128.275	128.211	128.143	128.072	127.997	127.920	127.839	127.755	127.668	127.578	127.485	127.388	127.288	127.185	127.079
Rt. Median Gutter	128.649	128.604	128.555	128.503	128.448	128.390	128.328	128.263	128.195	128.124	128.050	127.972	127.892	127.808	127.721	127.630	127.537	127.440	127.340	127.237	127.731
℄ Girder 8	128.821	128.757	128.692	128.626	128.558	128.490	128.420	128.349	128.276	128.202	128.128	128.051	127.974	127.895	127.815	127.734	127.652	127.569	127.484	127.398	127.311
℄ Girder 9	129.388	129.324	129.258	129.192	129.124	129.055	128.985	128.914	128.841	128.767	128.692	128.616	128.539	128.460	128.380	128.299	128.216	128.133	128.048	127.962	127.875
℄ Girder 10	129.954	129.890	129.824	129.758	129.690	129.621	129.550	129.479	129.406	129.332	129.257	129.181	129.103	129.024	128.944	128.863	128.781	128.697	128.613	128.527	128.440
℄ Girder 11	130.521	130.456	130.391	130.324	130.256	130.186	130.116	130.044	129.971	129.897	129.822	129.745	129.668	129.589	129.509	129.428	129.346	129.262	129.177	129.092	129.005
℄ Girder 12	131.088	131.023	130.957	130.890	130.822	130.752	130.681	130.609	130.536	130.462	130.387	130.310	130.233	130.154	130.074	129.993	129.910	129.827	129.742	129.657	129.570
℄ Girder 13	131.654	131.589	131.523	131.456	131.387	131.318	131.247	131.175	131.102	131.027	130.952	130.875	130.798	130.719	130.639	130.558	130.475	130.392	130.307	130.222	130.135
Right Gutter	131.796	131.731	131.665	131.598	131.529	131.459	131.388	131.316	131.243	131.169	131.094	131.017	130.939	130.860	130.780	130.699	130.617	130.533	130.449	130.363	130.277
Right Coping	131.893	131.824	131.757	131.690	131.621	131.551	131.481	131.409	131.335	131.261	131.186	131.109	131.031	130.952	130.872	130.791	130.709	130.625	130.541	130.455	130.373

NOTES:

1. Elevations given in the Tables on this Sheet are Top of Slab Finished Grade Elevations at the Coping Line, Gutter Lines, Centerline of Girders and PGL.

BRIDGE NO. 750743

REVISIONS

DATE	BY	DESCRIPTION	DATE	BY	DESCRIPTION

	NAMES	DATES
DRAWN BY	CAL	01-07
CHECKED BY	TED	01-07
DESIGNED BY	NJB	01-07
CHECKED BY	STP	01-07
APPROVED BY	T.E. Davidson P.E.	

ENGINEER OF RECORD:
PARSONS
2420 LAKEMONT AVE., SUITE 450, ORLANDO, FL 32814
PHONE: (407) 702-6800
CERTIFICATE OF AUTHORIZATION NO. 1838
THOMAS E. DAVIDSON, P.E. LIC. NO. 47131

EXPRESSWAY AUTHORITY

ROAD NO.	SR 414
COUNTY	ORANGE
FINANCIAL PROJECT ID	414-211

SHEET TITLE: FINISH GRADE ELEVATIONS (2 OF 2)

PROJECT NAME: MAITLAND BLVD. EXTENSION
SR 414 OVER SR 500 (US 441)

SHEET NO. B3-17

33259 1/5/2007 4:15:45 PM P:\646262\646262\struct\3SR441\b3FinishGrEL02.dgn

PARSONS

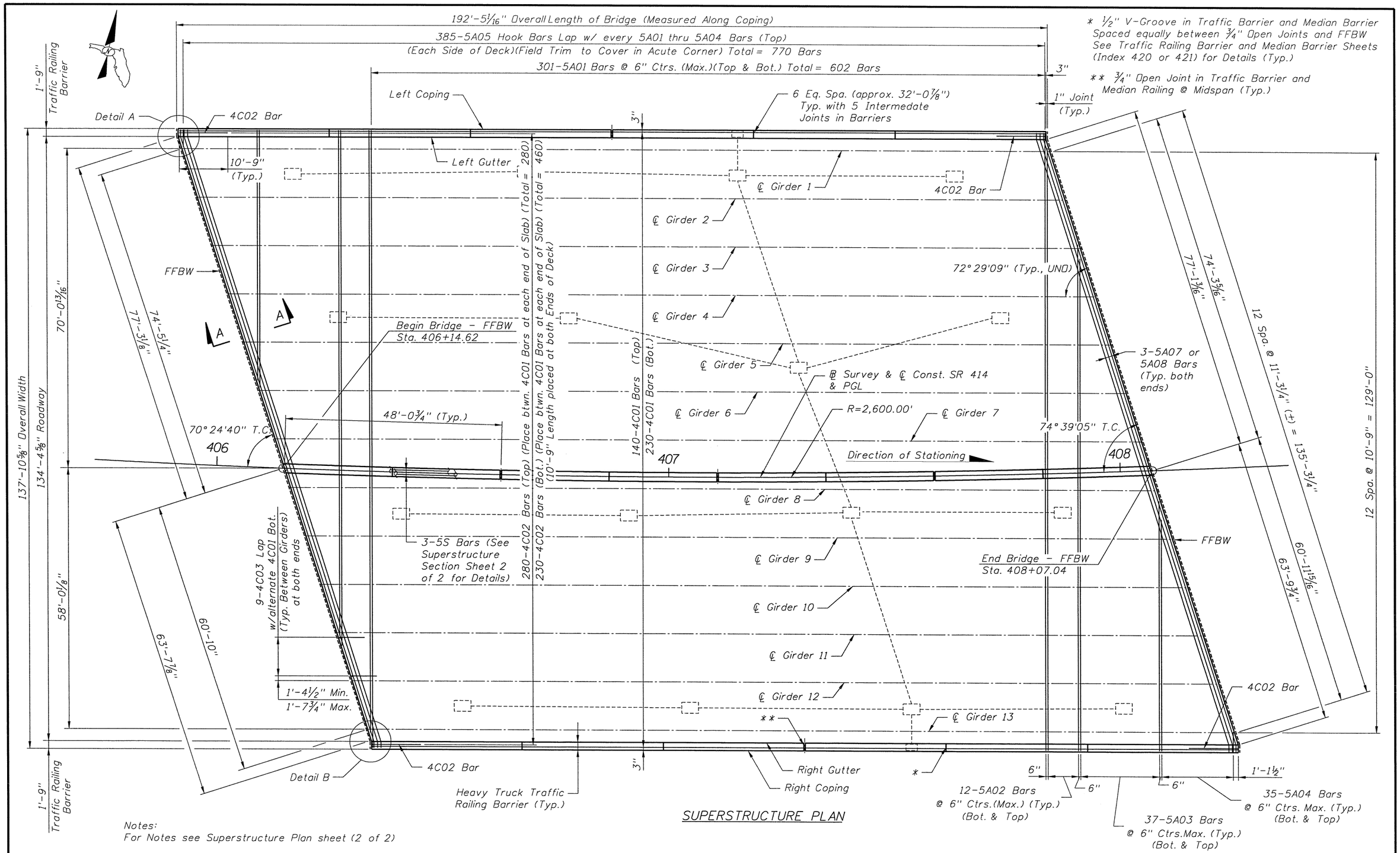

SUPERSTRUCTURE PLAN

Notes:
For Notes see Superstructure Plan sheet (2 of 2)

BRIDGE NO. 750743

REVISIONS					
DATE	BY	DESCRIPTION	DATE	BY	DESCRIPTION

	NAMES	DATES
DRAWN BY	CAL/SDM	01-07
CHECKED BY	HGL	01-07
DESIGNED BY	SDM	01-07
CHECKED BY	TED	01-07
APPROVED BY	T.E. Davidson P.E.	

ENGINEER OF RECORD:
PARSONS
2420 LAKEMONT AVE., SUITE 450, ORLANDO, FL 32814
PHONE: (407) 702-6800
CERTIFICATE OF AUTHORIZATION NO. 1838
THOMAS E. DAVIDSON, P.E. LIC. NO. 47131

EXPRESSWAY AUTHORITY

ROAD NO.	SR 414
COUNTY	ORANGE
FINANCIAL PROJECT ID	414-211

SHEET TITLE: SUPERSTRUCTURE PLAN (1 OF 2)

PROJECT NAME: MAITLAND BLVD. EXTENSION SR 414 OVER SR 500 (US 441)

SHEET NO. B3-18

33259 3/30/2007 3:43:18 PM P:\646262\646262\struct\3SR441\b3Superst01.dgn

PARSONS

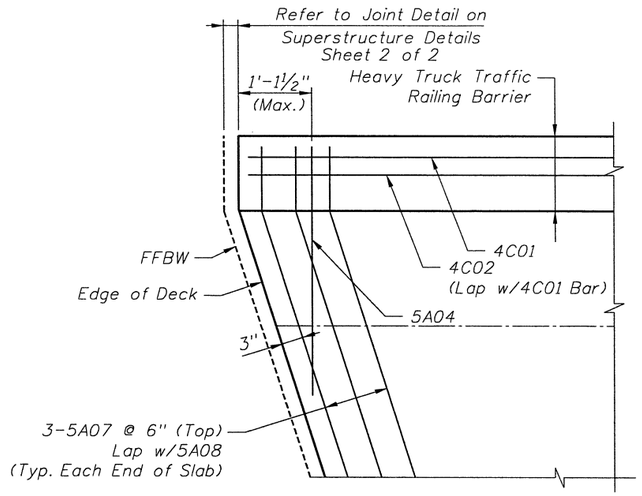

DETAIL A

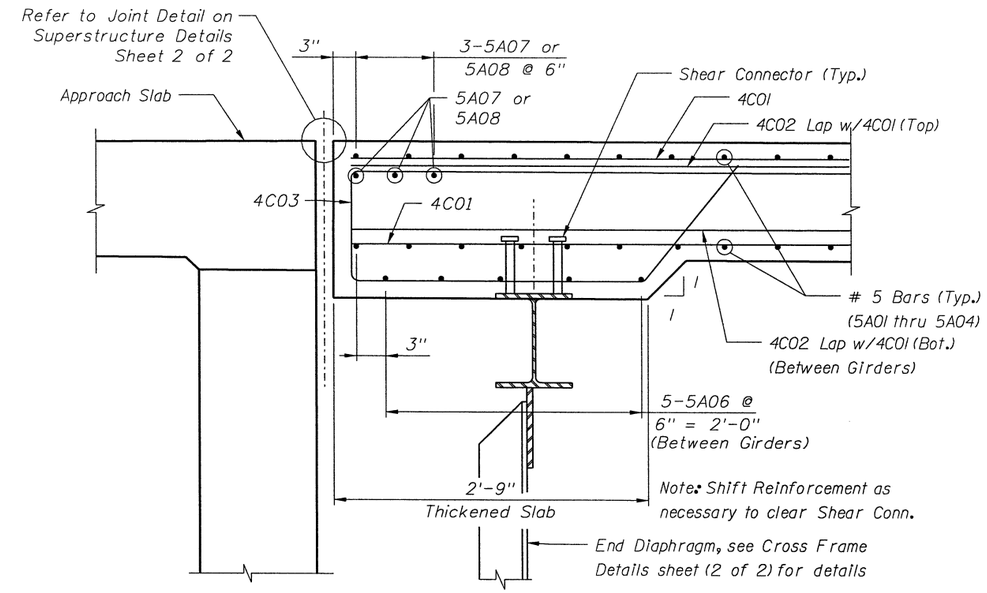

SECTION A-A

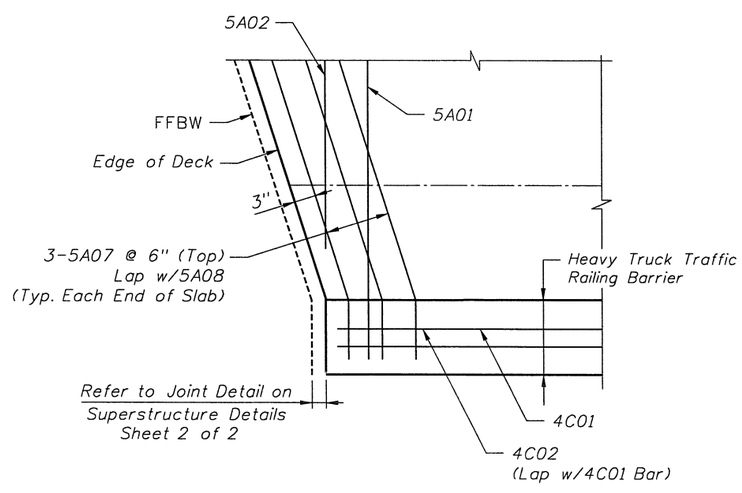

DETAIL B

SUPERSTRUCTURE NOTES:

1) All Reinforcing steel shall have 2 inch concrete cover, unless noted otherwise.
2) For Information on Superstructures, See Superstructure Section Sheets and Superstructure Detail Sheets.
3) For Rebar Listing See Reinforcing Bar List Sheet.
4) For additional rebar information See Standard Bar Bending Details, Sheet (Index 21300).
5) Placing Deck Slab Concrete:
   The slab shall be placed in one continuous pour beginning at one End Bent and proceeding toward the opposite End Bent.
6) Alternate location of lap splices for adjacent bars, thus:

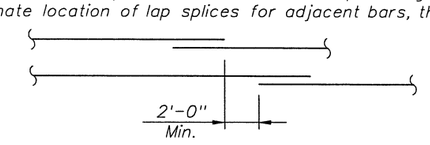

7) Contractor shall submit Shop Drawings for Method of Underdeck Lighting Attachment and Bracing.
8) Luminaire #UD-201 located at Sta. 406+14.50 offset 65.50' Left.
   Luminaire #UD-202 located at Sta. 406+25.80 offset 34.00' Left.
   Luminaire #UD-203 located at Sta. 406+41.00 offset 9.20' Right.
   Luminaire #UD-204 located at Sta. 406+55.30 offset 51.60' Right.
   Luminaire #UD-205 located at Sta. 406+67.40 offset 67.50' Left.
   Luminaire #UD-206 located at Sta. 406+77.50 offset 35.00' Left.
   Luminaire #UD-207 located at Sta. 406+91.20 offset 8.60' Right.
   Luminaire #UD-208 located at Sta. 407+04.70 offset 51.30' Right.
   Luminaire #UD-209 located at Sta. 407+15.50 offset 67.10' Left.
   Luminaire #UD-210 located at Sta. 407+29.00 offset 24.30' Left.
   Luminaire #UD-211 located at Sta. 407+40.30 offset 7.90' Right.
   Luminaire #UD-212 located at Sta. 407+52.80 offset 51.80' Right.
   Luminaire #UD-213 located at Sta. 407+64.80 offset 66.50' Left.
   Luminaire #UD-214 located at Sta. 407+74.30 offset 34.80' Left.
   Luminaire #UD-215 located at Sta. 407+86.90 offset 8.70' Right.
   Luminaire #UD-216 located at Sta. 407+98.90 offset 52.70' Right.
9) Luminaire locations identified are an Embedded Junction Box for Underdeck Luminaires. Shift Deck Reinforcing Steel around Junction Box as necessary. See Lighting Plans for Details of Box.
10) The Item identified is an 8"x8"x6" Deep Embedded Junction Box (in outside Traffic Railing Barriers) for Underdeck Luminaires. Shift Vertical Reinforcing Steel as necessary in Barrier.

BRIDGE NO. 750743

REVISIONS					
DATE	BY	DESCRIPTION	DATE	BY	DESCRIPTION

	NAMES	DATES
DRAWN BY	CAL	01-07
CHECKED BY	HGL	01-07
DESIGNED BY	SDM	01-07
CHECKED BY	TED	01-07
APPROVED BY	T.E. Davidson P.E.	

ENGINEER OF RECORD:
PARSONS
2420 LAKEMONT AVE., SUITE 450, ORLANDO, FL 32814
PHONE: (407) 702-6800
CERTIFICATE OF AUTHORIZATION NO. 1838
THOMAS E. DAVIDSON, P.E. LIC. NO. 47131

EXPRESSWAY AUTHORITY

ROAD NO.	SR 414
COUNTY	ORANGE
FINANCIAL PROJECT ID	414-211

SHEET TITLE: SUPERSTRUCTURE PLAN (2 OF 2)

PROJECT NAME: MAITLAND BLVD. EXTENSION
SR 414 OVER SR 500 (US 441)

SHEET NO. B3-19

PARSONS

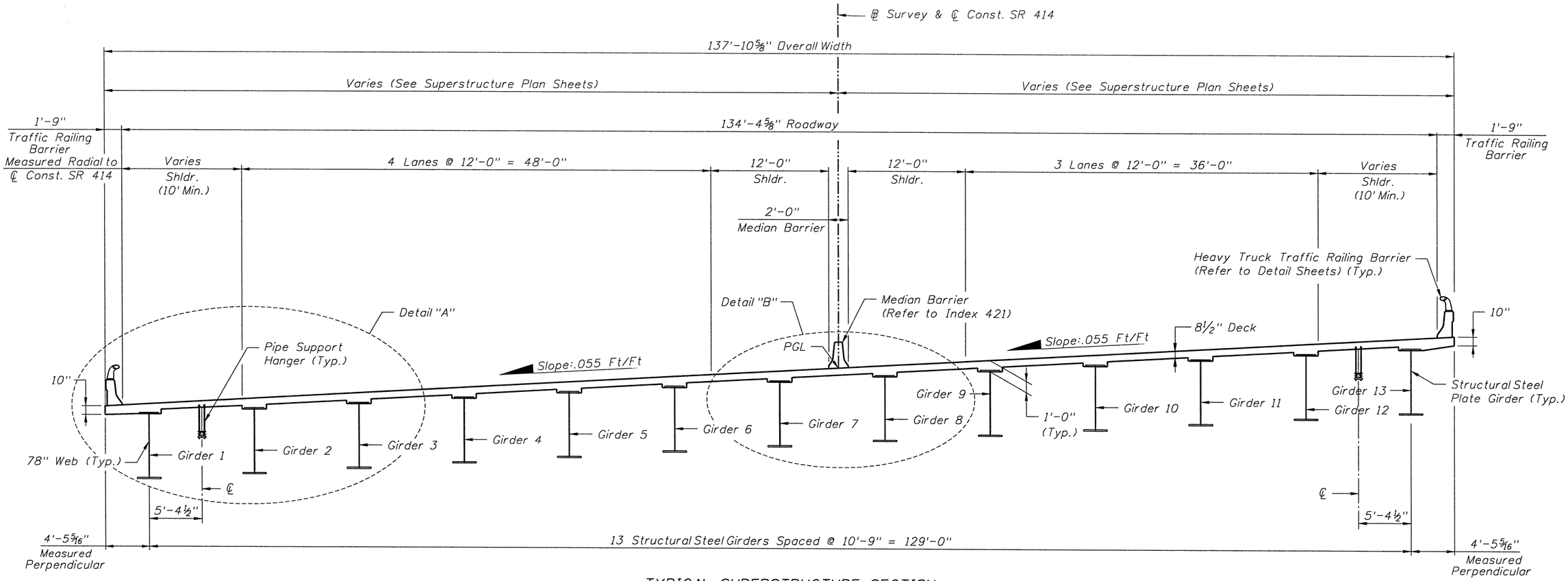

TYPICAL SUPERSTRUCTURE SECTION

GENERAL NOTES:

1. For Details A & B, see Superstructure Section Sheet (2 of 2).
2. All Transverse Dimensions Shown are Measured Perpendicular to ℄ Const. SR 441 Unless Noted Otherwise (UNO).
3. For Details of Traffic Railing Barriers and Median Barriers, Including Additional Reinforcing Originating in the Deck Slab, See Superstructure Section Sheet (2 of 2) and Heavy Truck Traffic Railing Barrier Details Sheets.
4. Refer to Superstructure Plan Sheets for layout of Deck Bars.
5. For Fiber Optic Pipe Hanger Details See Summary of Bridge Pay Items and Pipe Hanger Details Sheet.
6. See Framing Plan for Location of Crossframes, Diaphragms, and other Framing Details.

GIRDER JACKING NOTES (BEARING PAD REPLACEMENT):

1. Jacks, materials, labor and equipment necessary to remove and replace the bearing pads are not included in the contract to construct the bridge.
2. The girders shall be jacked at jacking Stiffener locations shown on the Superstructure Details Sheets.

Loads	Loads / Jack (End Bents)
DL	132k
LL+I	139k
DL+LL+I	271k
No. of Jacks	26 each End Bent

3. Loosen all nuts for Anchor Bolts prior to jacking. All Anchor Bolts shall be double nutted and jammed tight after bearing replacement is complete. Provide ½" gap between nut and washer for free movement of girder.
4. The Girders shall be jacked simultaneously.
5. All Jacks shall bear on steel bearing plates of sufficient thickness so as to prevent damage to the concrete substructure. All concrete surfaces beneath the bearing plates shall be ground flat, or high strength grout beds can be used. The Minimum Plate size for a each Jack is 1" x8"x8"
6. Refer to Superstructure Details Sheets for Location of Jacking Stiffeners.
7. Jacking loads are for each Jack. Twenty-six (26) Jacks are required at each End Bent.

BRIDGE NO. 750743

REVISIONS

DATE	BY	DESCRIPTION	DATE	BY	DESCRIPTION

	NAMES	DATES
DRAWN BY	MC/SDM	01-07
CHECKED BY	HGL	01-07
DESIGNED BY	SDM	01-07
CHECKED BY	TED	01-07
APPROVED BY	T.E. Davidson P.E.	

ENGINEER OF RECORD:
PARSONS
2420 LAKEMONT AVE., SUITE 450, ORLANDO, FL 32814
PHONE: (407) 702-6800
CERTIFICATE OF AUTHORIZATION NO. 1838
THOMAS E. DAVIDSON, P.E. LIC. NO. 47131

EXPRESSWAY AUTHORITY

ROAD NO.	SR 414
COUNTY	ORANGE
FINANCIAL PROJECT ID	414-211

SHEET TITLE: SUPERSTRUCTURE SECTION (1 OF 2)

PROJECT NAME: MAITLAND BLVD. EXTENSION SR 414 OVER SR 500 (US 441)

SHEET NO. B3-20

PARSONS

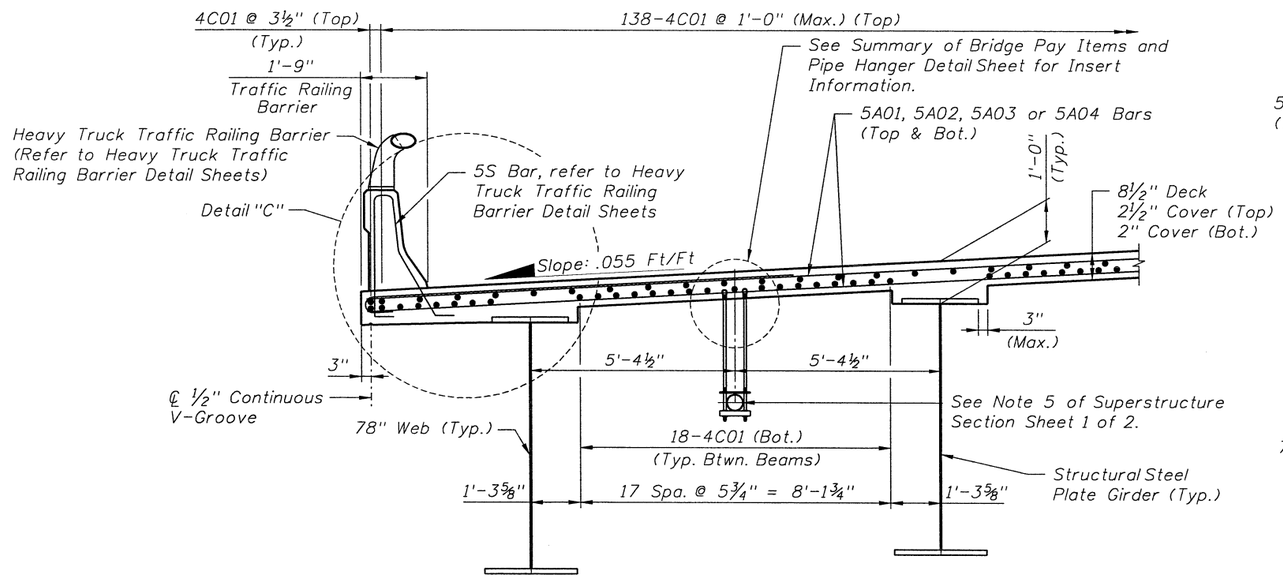

DETAIL "A"

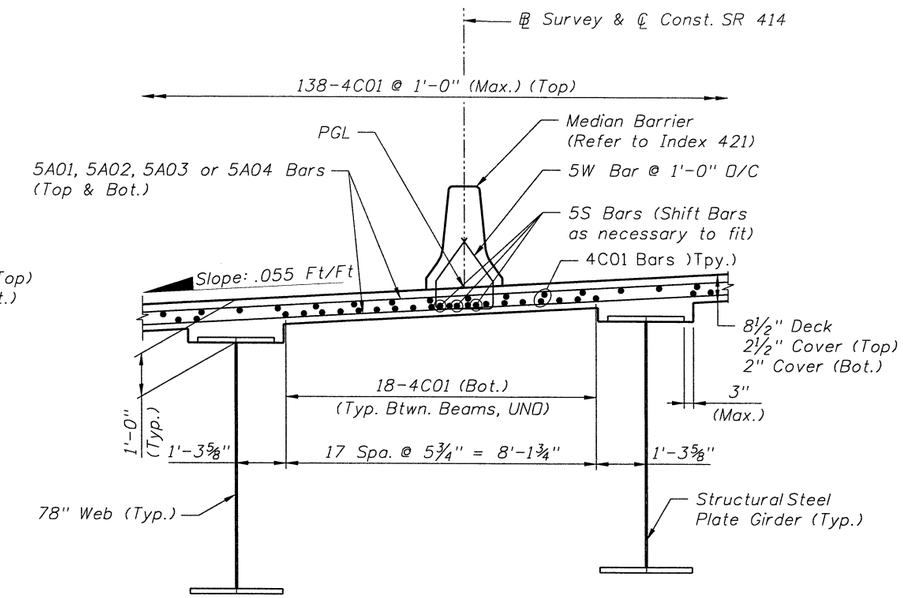

DETAIL "B"

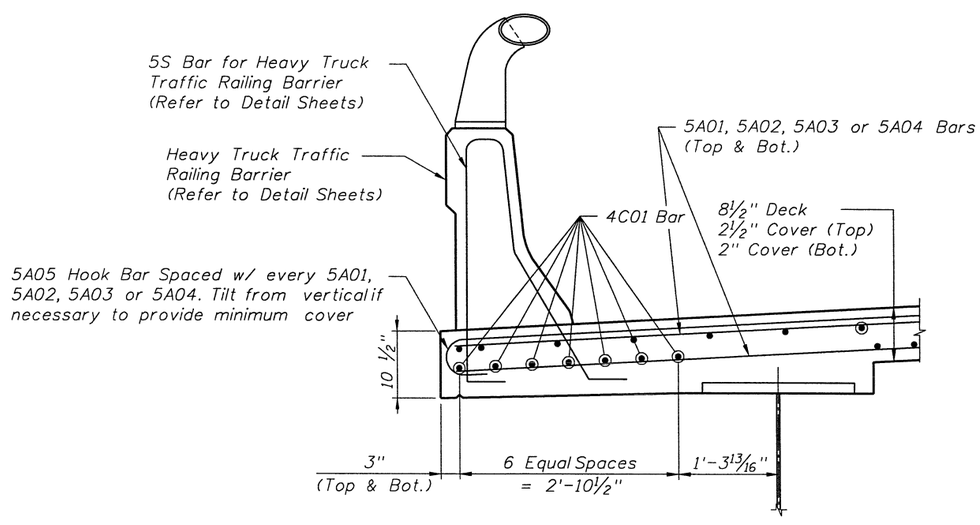

DETAIL "C"

ESTIMATED SUPERSTRUCTURE QUANTITIES		
ITEM	UNIT	QUANTITY
Class II (Bridge Deck) Concrete (Superstructure)	C.Y.	782.4
Reinforcing Steel (Superstructure)	L.B.	180.969
Median Traffic Railing Barrier (32" F-Shape) *	L.F.	257
Heavy Truck Traffic Railing Barrier	L.F.	512

* Railing along Approach slab included.

Note:
Refer to Superstructure Section (1 of 2) for General Notes and Jacking Information.

BRIDGE NO. 750743

REVISIONS

DATE	BY	DESCRIPTION	DATE	BY	DESCRIPTION

	NAMES	DATES
DRAWN BY	MC/SDM	01-07
CHECKED BY	HGL	01-07
DESIGNED BY	SDM	01-07
CHECKED BY	TED	01-07
APPROVED BY	T.E. Davidson P.E.	

ENGINEER OF RECORD:
PARSONS
2420 LAKEMONT AVE., SUITE 450, ORLANDO, FL 32814
PHONE: (407) 702-6800
CERTIFICATE OF AUTHORIZATION NO. 1838
THOMAS E. DAVIDSON, P.E. LIC. NO. 47131

EXPRESSWAY AUTHORITY

ROAD NO.	SR 414
COUNTY	ORANGE
FINANCIAL PROJECT ID	414-211

SHEET TITLE: SUPERSTRUCTURE SECTION (2 OF 2)

PROJECT NAME: MAITLAND BLVD. EXTENSION
SR 414 OVER SR 500 (US 441)

SHEET NO. B3-21

33259 1/5/2007 4:15:49 PM P:\646262\646262\struct\3SR441\b31typicalsection02.dgn

PARSONS

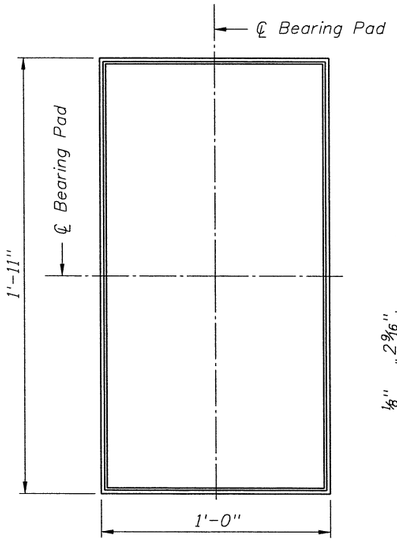

PLAN

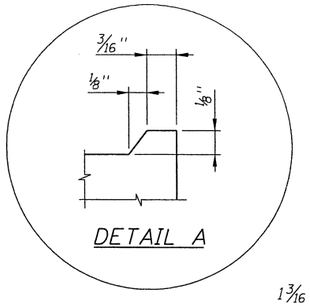

DETAIL A

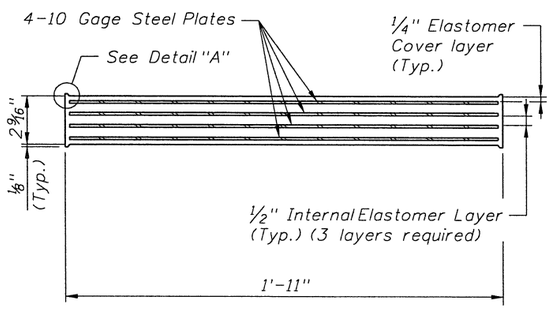

PAD SECTION

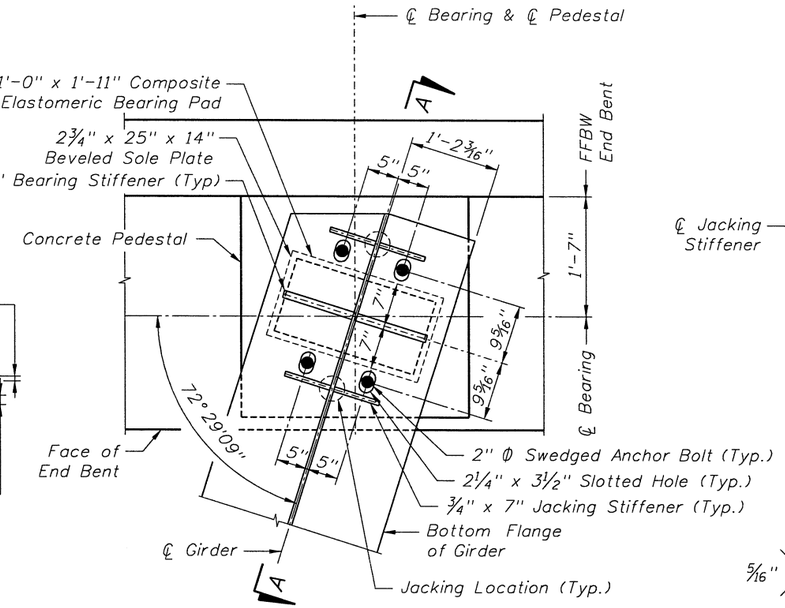

END BENT BEARING
(PARTIAL PLAN)

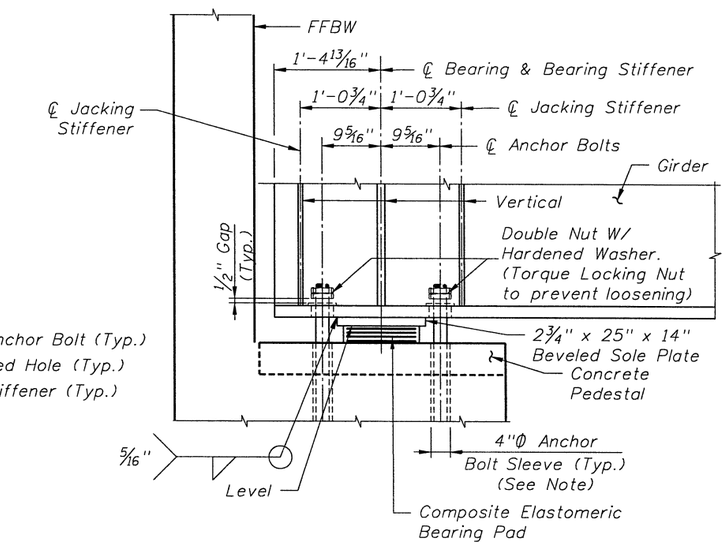

SECTION A-A

NON-STANDARD COMPOSITE BEARING QUANTITIES			
Bridge Number	Girder Type	Pad Type	Number of Required Pads
750743	78" Steel	Non-Standard	26

NON-STANDARD COMPOSITE BEARING

Note:
Anchor Bolts to have a minimum 15" Embedment Length from the top of the End Bent Cap.

NON-STANDARD COMPOSITE BEARING PAD NOTES:
1. Neoprene in all bearing pads shall have a minimum Grade 50 durometer hardness.
2. Steel Plates in bearing pads shall conform to ASTM A1011 Grade 36, Type 1.
3. Bearing Seat shall be finished level.
4. Non-Standard Composite Neoprene Bearing Pads shall be paid for under, Item No, 400-147.
5. Variations in pad dimensions will be allowed provided the revised pads meet the Specifications, and are approved by the Engineer.
6. See Bid Item Notes for quantities of Bearing pad.

BRIDGE NO. 750743

REVISIONS					
DATE	BY	DESCRIPTION	DATE	BY	DESCRIPTION

	NAMES	DATES
DRAWN BY	CAL	01-07
CHECKED BY	TED	01-07
DESIGNED BY	HGL	01-07
CHECKED BY	TED	01-07
APPROVED BY	T.E. Davidson P.E.	

ENGINEER OF RECORD:
PARSONS
2420 LAKEMONT AVE., SUITE 450, ORLANDO, FL 32814
PHONE: (407) 702-6800
CERTIFICATE OF AUTHORIZATION NO. 1838
THOMAS E. DAVIDSON, P.E. LIC. NO. 47131

EXPRESSWAY AUTHORITY

ROAD NO.	SR 414
COUNTY	ORANGE
FINANCIAL PROJECT ID	414-211

SHEET TITLE: SUPERSTRUCTURE DETAILS (1 OF 2)

PROJECT NAME: MAITLAND BLVD. EXTENSION SR 414 OVER SR 500 (US 441)

SHEET NO. B3-22

33259 1/5/2007 4:15:49 PM P:\646262\646262\struct\3SR441\b3SuperstDet01.dgn

PARSONS

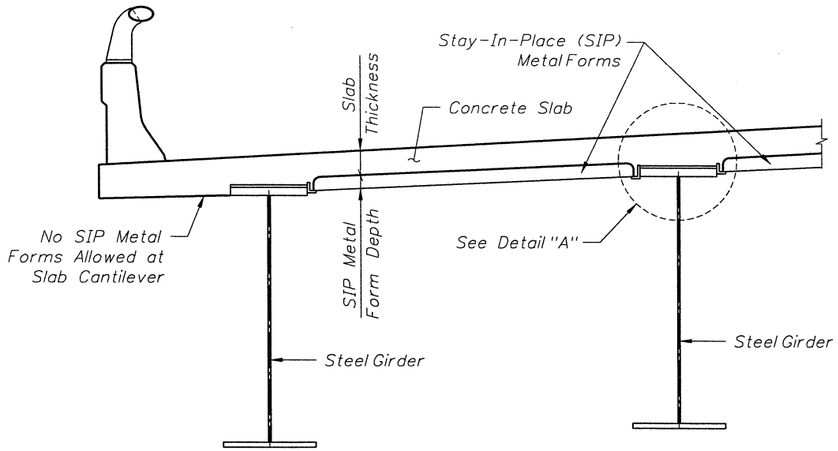

PARTIAL SECTION THRU SUPERSTRUCTURE

(Showing Typical Details & Notes for SIP Metal Forms)

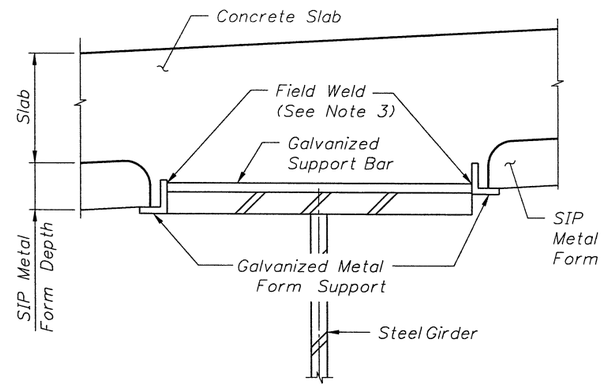

DETAIL "A"

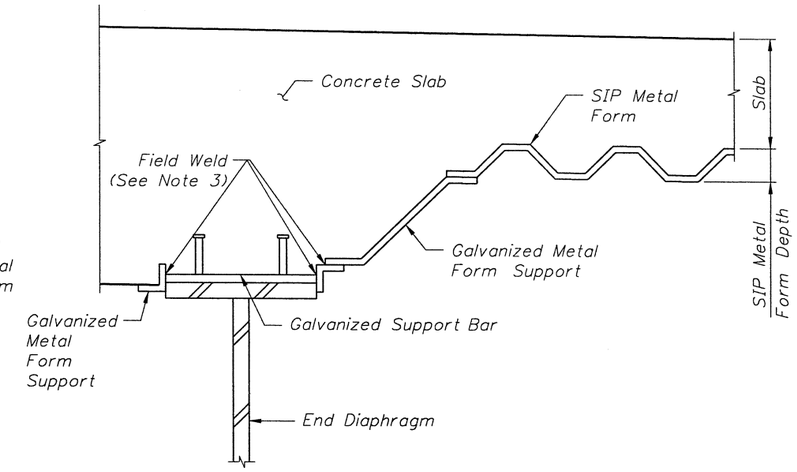

PARTIAL SECTION THRU END OF SPAN

STAY-IN-PLACE METAL FORM NOTES:

1. The Superstructure Concrete Quantities shown do not include the concrete required to fill the stay-in-place metal form flutes.
2. The cost of the stay-in-place metal forms, the concrete required to fill the flutes, the metal form attachments and accessories and all miscelleneous items required to install the forms shall be included in the contract Unit Price for the Superstructure Concrete.
3. Do not Weld to nor Permit Weld Spatter on Supporting Steel Girders, Diaphragm, Bracing, etc. Electrical Grounding to Structural Steel is Prohibited. See Section 400 of the Specifications for Field Welding of SIP Forms in Place and Painting of the Top Flange.

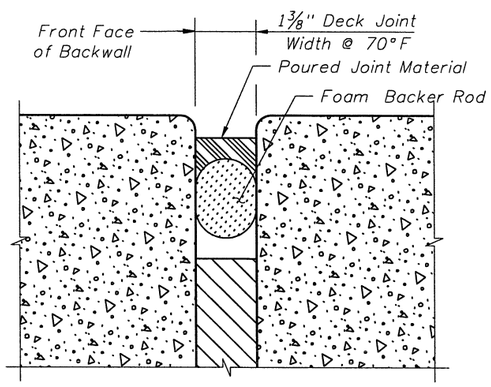

SECTION THRU DECK JOINT
JOINT DETAIL

Note:
Use Poured Joint with Backer Rod Expansion Joint System in conformance with Design Standards Index 21110.
The Cost of Joints Shall be included under the Contract Unit Price For Pay Items No. 400-2-4 "Concrete Class II (Superstructure)."

EXPANSION JOINT DATA TABLE (INDEX 21110)

Location	Skew Angle	Total Design Movement: In Dir. of Movement	Total Design Movement: Perpendicular to ℄ Joint: Along Skew	Total Design Movement: Perpendicular to ℄ Joint: At Barr.	Dim. 'A' * Adjustment per 10°F: Along Skewed Joint	Dim. 'A' * Adjustment per 10°F: At Barrier
End Bent 1	17.5°	0.47"	0.45"	0.47"	0.07"	0.07"
End Bent 2	17.5°	0.47"	0.45"	0.47"	0.07"	0.07"

*Adjustment Based on 1/2 Span Length Thermal Movement.

BRIDGE NO. 750743

REVISIONS

DATE	BY	DESCRIPTION	DATE	BY	DESCRIPTION

	NAMES	DATES
DRAWN BY	CAL	01-07
CHECKED BY	TED	01-07
DESIGNED BY	HGL	01-07
CHECKED BY	NJB	01-07
APPROVED BY	T.E. Davidson P.E.	

ENGINEER OF RECORD:
PARSONS
2420 LAKEMONT AVE., SUITE 450, ORLANDO, FL 32814
PHONE: (407) 702-6800
CERTIFICATE OF AUTHORIZATION NO. 1838
THOMAS E. DAVIDSON, P.E. LIC. NO. 47131

EXPRESSWAY AUTHORITY

ROAD NO.	SR 414
COUNTY	ORANGE
FINANCIAL PROJECT ID	414-211

SHEET TITLE: SUPERSTRUCTURE DETAILS (2 OF 2)

PROJECT NAME: MAITLAND BLVD. EXTENSION
SR 414 OVER SR 500 (US 441)

SHEET NO. B3-23

33259 1/5/2007 4:15:50 PM P:\646262\646262\struct\3SR441\b3SuperstDet02.dgn

PARSONS

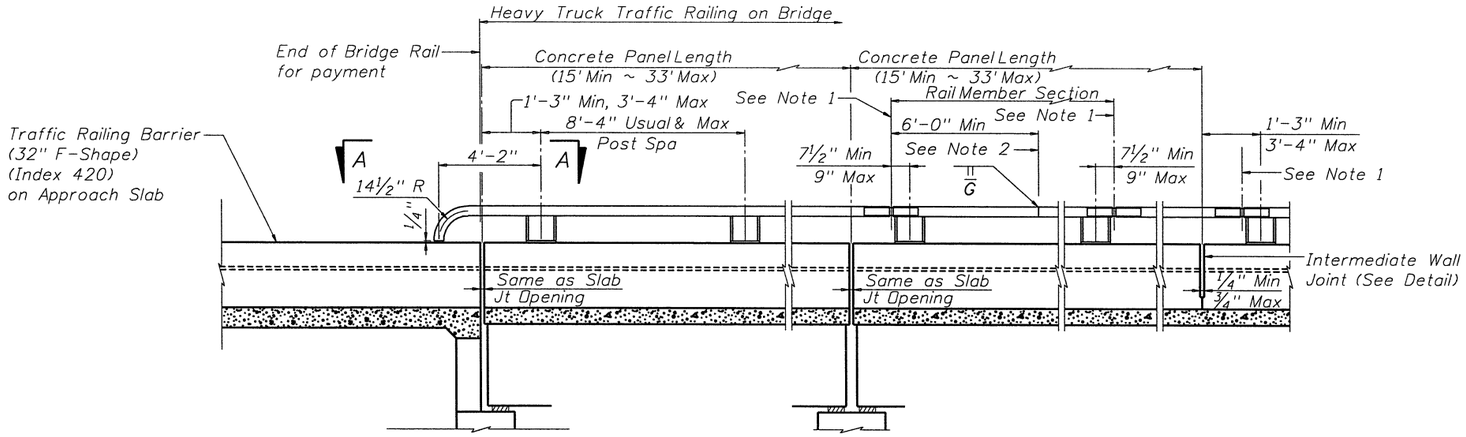

AT ABUTMENT BENTS AT SLAB EXP JOINTS AT INTERMEDIATE WALL JOINTS

ROADWAY ELEVATION OF RAIL

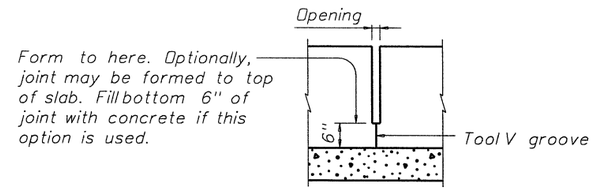

INTERMEDIATE WALL JOINT DETAIL

Note: Provide intermediate wall joints over all slab construction joints, over interior supports on continuous units, and at equal intervals in between as necessary to maintain a 33' maximum length of unbroken wall.

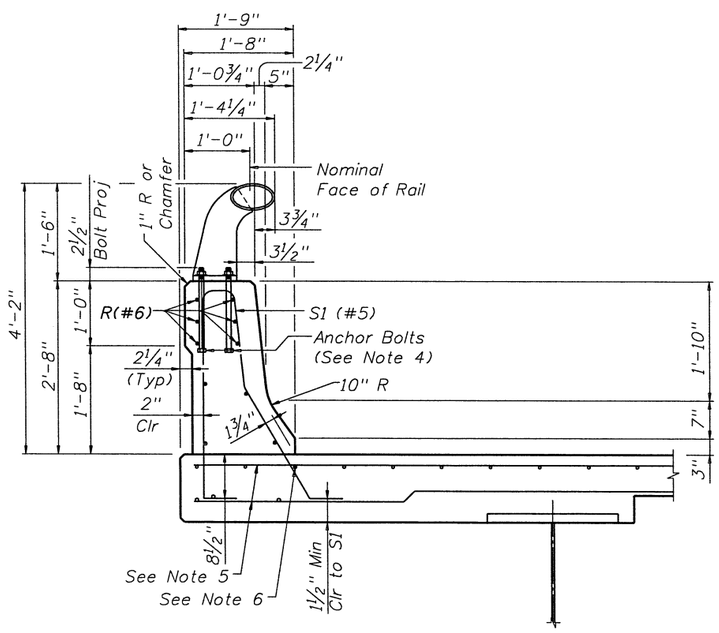

SECTION THRU RAIL
(See Note 3)

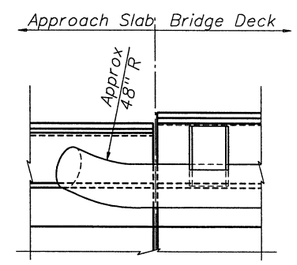

VIEW A-A
(Showing Rail Member turn-down)

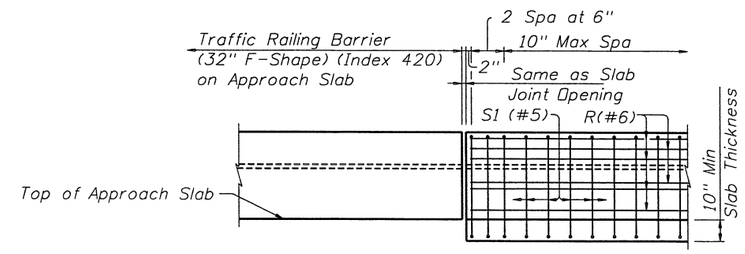

ELEVATION SHOWING TYPICAL REINFORCING PLACEMENT
(See Note 3)

NOTES

1) ℄ Exp Jt or Splice Jt as required.
2) One shop splice per panel is permitted with minimum 85 percent penetration. Weld flaws resulting in no less than 60 percent penetration are permissible in the upper and lower 90 degree quadrants of the members. The weld may be square groove, double vee groove, or single groove as shown on the approved weld procedure. Grind smooth.
3) The details on this sheet are intended for mounting on the bridge deck only.
4) Three R(#6) bars are placed outside of the anchor bolts.
5) Minimum of #5 bars at 3" Spa (Top) & Minimum of #5 bars at 7" Spa (Bott), or equivalent.
6) Top longitudinal slab bar may be adjusted laterally 3" ± to tie reinforcing.

BRIDGE NO. 750743

REVISIONS					
DATE	BY	DESCRIPTION	DATE	BY	DESCRIPTION

	NAMES	DATES
DRAWN BY	JDB	01-07
CHECKED BY	TED	01-07
DESIGNED BY	JDB	01-07
CHECKED BY	TED	01-07
APPROVED BY	T.E. Davidson P.E.	

ENGINEER OF RECORD:
PARSONS
2420 LAKEMONT AVE., SUITE 450, ORLANDO, FL 32814
PHONE: (407) 702-6800
CERTIFICATE OF AUTHORIZATION NO. 1838
THOMAS E. DAVIDSON, P.E. LIC. NO. 47131

EXPRESSWAY AUTHORITY

ROAD NO.	SR 414
COUNTY	ORANGE
FINANCIAL PROJECT ID	414-211

SHEET TITLE:
HEAVY TRUCK
TRAFFIC RAILING BARRIER DETAILS (1 OF 2)

PROJECT NAME:
MAITLAND BLVD. EXTENSION
SR 414 OVER SR 500 (US 441)

SHEET NO.
B3-24

PARSONS

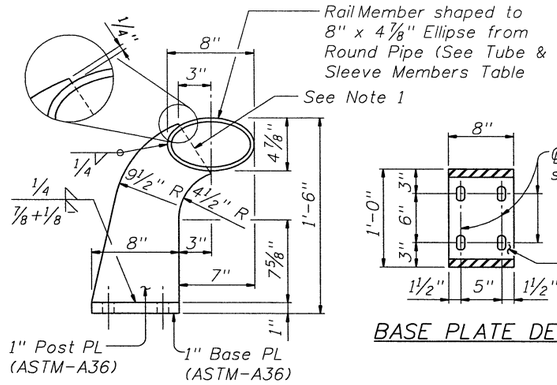

END VIEW OF POST

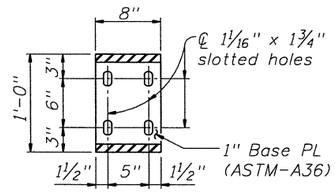

BASE PLATE DETAIL

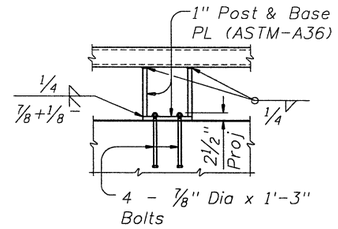

ELEVATION OF POST
(Showing Anchor Bolts)

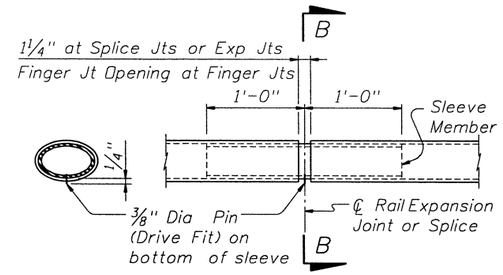

SECTION B-B AT SPLICE OR EXP JTS

TUBE SPLICE DETAIL

RAIL DATA FOR HORIZONTAL CURVES			
	RADIUS TO FACE OF RAIL	MAX CHORD LENGTH	CONSTRUCT OR FABRICATE
Rail Members	Over 2800'	29'-0"	Straight rail sections
	Over 1400' thru 2800'	14'-6"	To required radius or to chords shown (See Note 2)
	Over 700' thru 1400'	7'-3"	
	Thru 700'	Zero	To required radius (See Note 2)

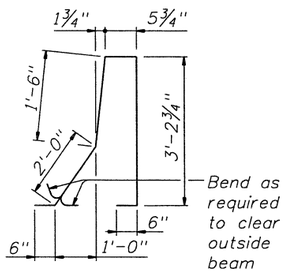

BARS S1 (#5)

TUBE & SLEEVE MEMBERS		
8" x 4 7/8" Ellipse	Splice Member	
Material	Material	Thickness
6" Dia Std Pipe ASTM-A53 E or S Gr B)	ASTM-A53 Gr B	0.353"
	A36 or A500 Gr B	0.339"
	API-5LX52	0.224"
6 5/8" O.D. Pipe x 0.188" API-5LX52	ASTM-A53 Gr B	0.339"
	A36 or A500 Gr B	0.325"
	API-5LX52	0.188"

Notes: Other sections of equal or greater strength are acceptable for sleeves. The major and minor diameters of the rail member may vary +/- 0.1875 inches from plan dimension. However, the difference between the outside diameters of the sleeve and the inside diameters of the rail shall not exceed 0.25 inches.

NOTES

1) Pipe may be slotted to fit Plates in lieu of cutting plates to fit pipe, except plates adjacent to tube splice.
2) Shop drawings required for tubular steel sections (may be submitted as 11"x 17" prints, provided they are clearly legible).

GENERAL NOTES

1) This rail is based on the Texas Heavy Truck Barrier (Type HT) which was evaluated based on the results of previous crash tests and approved for a NCHRP Report 350 TL-5 rating. This rail can be used for design speeds of 50 mph and greater when a TL-3 rated guard fence transition is used.
2) This rail requires a 10" Min slab thickness.
3) Rail anchorage details shown on this standard may require modification for select structure types. See appropriate details elsewhere in plans for these modifications.
4) All steel components except reinforcing shall be galvanized unless otherwise shown in the plans.
5) All concrete for railing shall be Class II (Bridge Deck).
6) All reinforcing steel shall be Grade 60. Welded Wire Fabric will not be permitted in this rail.
7) Dimensions relating to reinforcing steel spacing are to centers of bars except as shown.
8) Anchor bolts shall be 7/8" Dia ASTM A325 bolts (or A321 threaded rods with one tack welded hex nut each) with one hex nut and one 2 1/4" O.D. washer (0.193" Min thick) plus one 1 3/4" O.D. hardened steel washer (0.136" Min thick) at each bolt. Optionally use rectangular 3/8 x 2 x 0'-3" A36 plate with 15/16" Dia hole. Nuts shall conform to A563 requirements. The untapped blanks shall be galvanized prior to cutting the threads. Threads for bolts and nuts shall have Class 2A and 2B fit tolerances in accordance with ASME B1.1.
9) The back of railing shall be vertical unless otherwise approved by the Engineer or shown in plans. Rail posts shall be perpendicular to top of adjacent concrete parapet grade. Grout may be used under post base plates if necessary.
10) The Heavy Truck Rail may terminate on the structure if safety considerations so allow. In this case, there will be a transition between the HT rail and a normal traffic railing . See Bridge Layout for limits.
11) Slip-forming this rail is not allowed.
12) Erection drawings showing panel lengths, rail post spacing, and anchor bolt setting shall be submitted to the Engineer for approval.
13) Panel lengths of tube members shall be attached continuously to a minimum of three posts.
14) Average weight of railing with no overlay: 486 plf (Conc)
30 plf (Steel)
15) Heavy Truck Traffic Railing Barrier shall be paid for under Pay Item 521-5-9, Concrete Traffic Railing - Bridge (Special).

BRIDGE NO. 750743

REVISIONS

DATE	BY	DESCRIPTION	DATE	BY	DESCRIPTION

	NAMES	DATES
DRAWN BY	JDB	01-07
CHECKED BY	TED	01-07
DESIGNED BY	JDB	01-07
CHECKED BY	TED	01-07
APPROVED BY	T.E. Davidson P.E.	

ENGINEER OF RECORD:
PARSONS
2420 LAKEMONT AVE., SUITE 450, ORLANDO, FL 32814
PHONE: (407) 702-6800
CERTIFICATE OF AUTHORIZATION NO. 1838
THOMAS E. DAVIDSON, P.E. LIC. NO. 47131

EXPRESSWAY AUTHORITY

ROAD NO.	SR 414
COUNTY	ORANGE
FINANCIAL PROJECT ID	414-211

SHEET TITLE: HEAVY TRUCK TRAFFIC RAILING BARRIER DETAILS (2 OF 2)

PROJECT NAME: MAITLAND BLVD. EXTENSION SR 414 OVER SR 500 (US 441)

SHEET NO. B3-25

PARSONS

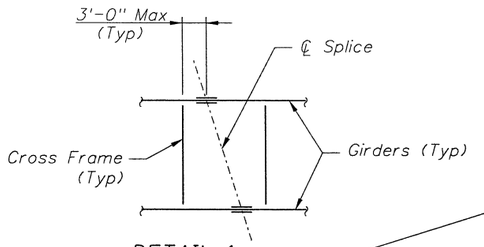

DETAIL 1

Optional Girder Cross Frame scheme at locations where X-Frames cross ℄ Splice. (See Note 14)

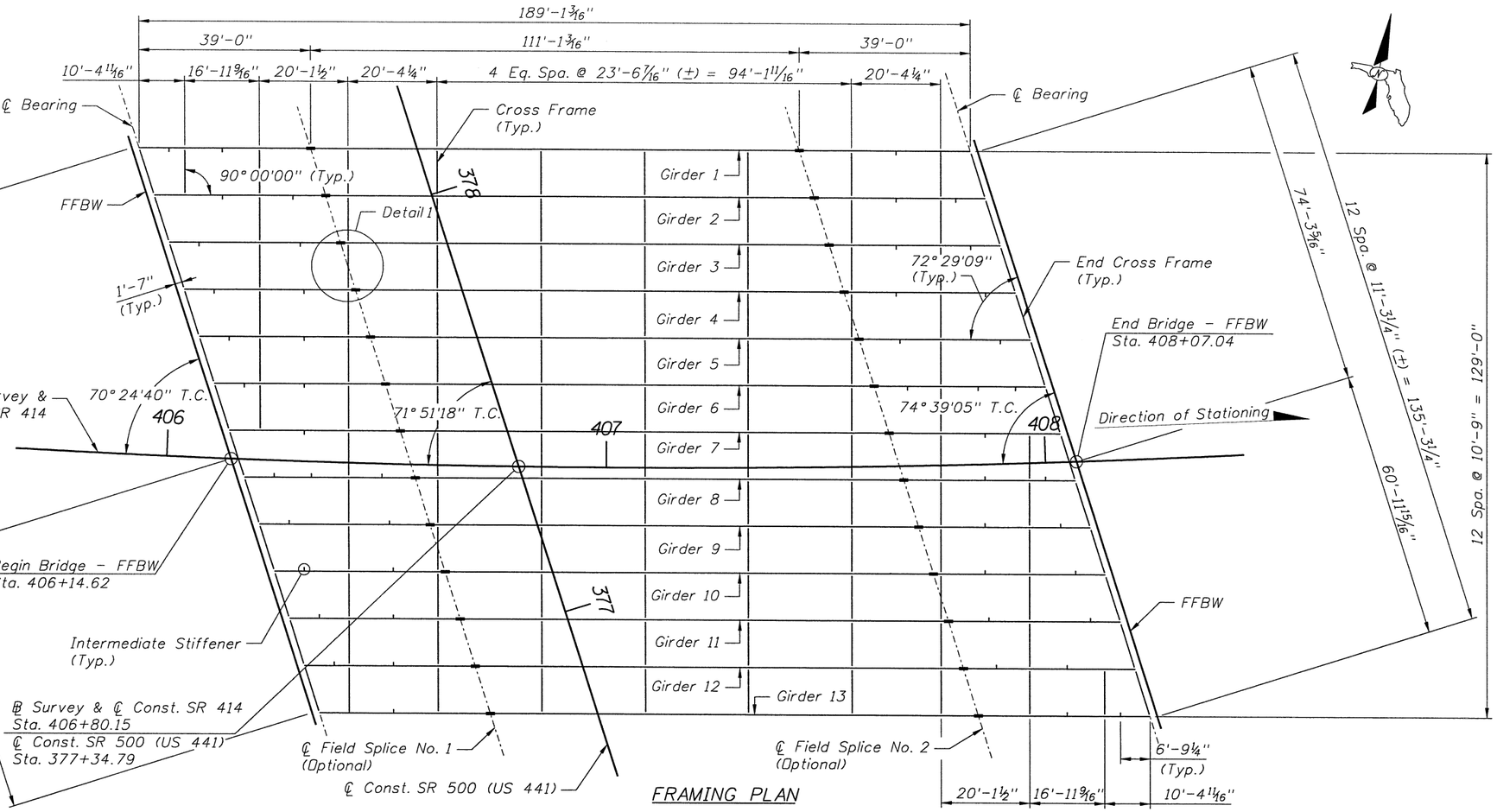

FRAMING PLAN

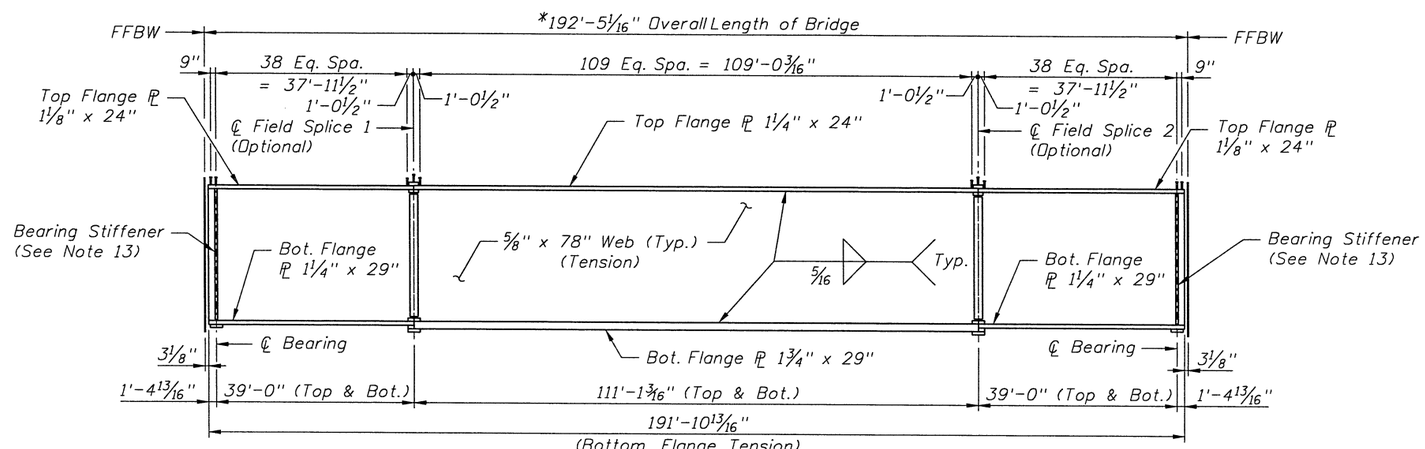

*Dimension Measured Along ℄ Girder on Horizontal Plane

GIRDER ELEVATION

NOTES:

1. Fabricator may shift Cross Frame up to 1' if needed for fit-up.
2. For Cross Frame Details refer to Cross Frame Details Sheets.
3. Intermediate Stiffeners are not shown on Girder Elevation.
4. Dimensions shown are not adjusted for Camber or Vertical Curve.
5. All Structural Steel framing components are considered redundant. Plates marked (Tension) shall meet minimum Charpy V-Notch requirements. Refer to General Notes and Specifications.
6. Place Bolt Heads on the outside of Exterior Girders and at the bottom of Flanges.
7. Bolt Holes for Cross Frames may be oversized in both Plies. All other Holes shall be Standard Size unless noted otherwise.
8. All Welds and Weld Types shall be shown on the Shop Drawings.
9. All Shop Welded Splices shall be Prequalified AWS Complete Joint Penetration (CJP) Groove Weld.
10. Cross Frame Connection Stiffener Plates are not shown on Framing Plan (See Framing Details & Cross Frame Details Sheets).
11. The first web stiffening component (transverse stiffener or cross frame connection stiffener) is located 6'-9 1/4" along girder from bearing centerline. All other intermediate transverse stiffeners as shown on framing plan, are located at the mid-point between adjacent web stiffening components such as transverse stiffeners, cross frame connection stiffeners or web splices.
12. For Jacking loads, see Superstructure Section Sheets.
13. Jacking Stiffeners (both ends of girders) omitted for clarity, see Framing Details, Cross Frame Details (2 of 2), and Superstructure Details (2 of 2) Sheets for information.
14. The Cross Frame layout as shown in Detail 1 is optional pending difficulties with connection details for the single Cross Frame across the Splice ℄. The cost of the added Cross Frame in this Detail shall be included in the cost of the Lump Sum Bid Item for Structural Steel.

BRIDGE NO. 750743

REVISIONS

DATE	BY	DESCRIPTION	DATE	BY	DESCRIPTION

	NAMES	DATES
DRAWN BY	CAL/SDM	01-07
CHECKED BY	TED	01-07
DESIGNED BY	NJB	01-07
CHECKED BY	TED	01-07
APPROVED BY	T.E. Davidson P.E.	

ENGINEER OF RECORD:
PARSONS
2420 LAKEMONT AVE., SUITE 450, ORLANDO, FL 32814
PHONE: (407) 702-6800
CERTIFICATE OF AUTHORIZATION NO. 1838
THOMAS E. DAVIDSON, P.E. LIC. NO. 47131

EXPRESSWAY AUTHORITY

ROAD NO.	SR 414
COUNTY	ORANGE
FINANCIAL PROJECT ID	414-211

SHEET TITLE: FRAMING PLAN AND GIRDER ELEVATION

PROJECT NAME: MAITLAND BLVD. EXTENSION
SR 414 OVER SR 500 (US 441)

SHEET NO. B3-26

33259 1/5/2007 4:15:54 PM P:\646262\646262\struct\3SR441\b3FramingPlan01.dgn

PARSONS

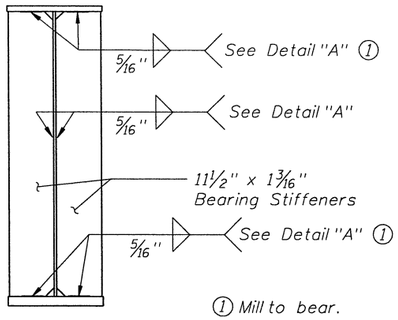

BEARING STIFFENER

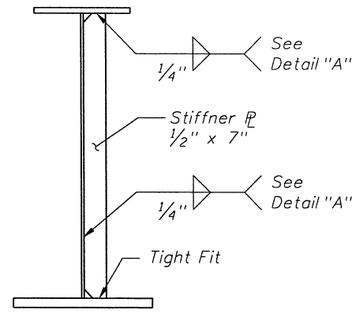

INTERMEDIATE STIFFENER

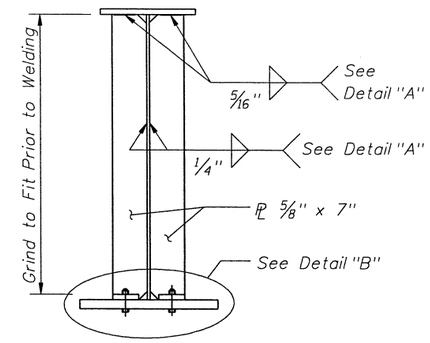

CROSS FRAME STIFFENER

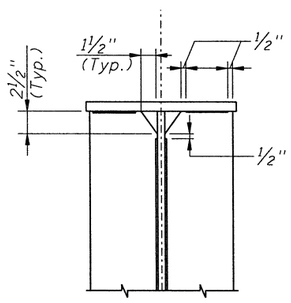

DETAIL "A"

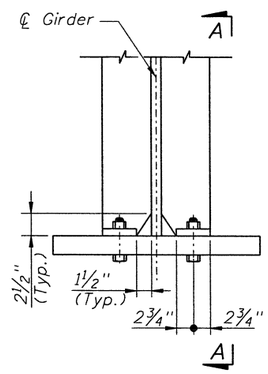

DETAIL "B"
(Typ. Conn. at locations of Tension)

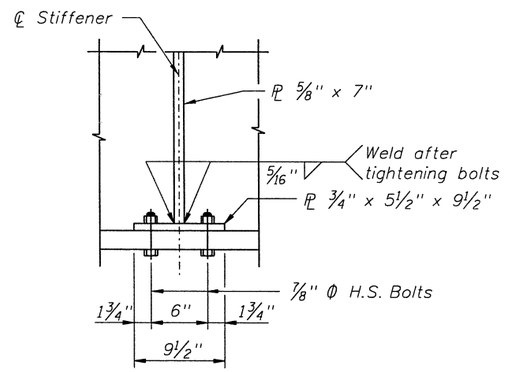

SECTION A-A

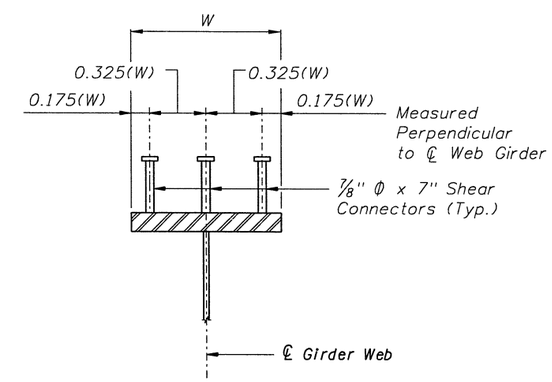

SHEAR CONNECTOR DETAILS

NOTE:
Shear Connectors shall conform to the requirements in the FDOT Standard Specifications, Section 502.

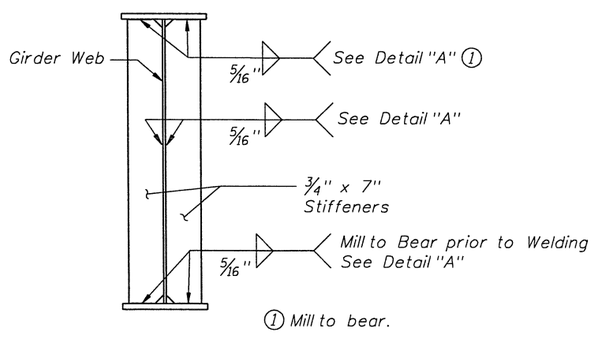

JACKING STIFFENER

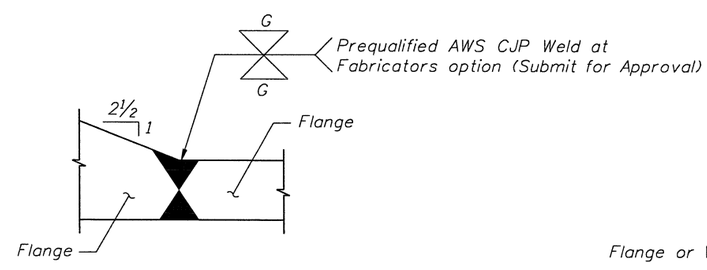

FLANGE BUTT WELD

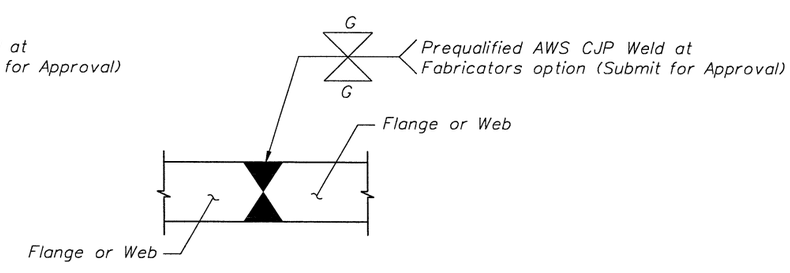

FLANGE OR WEB BUTT WELD

BRIDGE NO. 750743

REVISIONS					
DATE	BY	DESCRIPTION	DATE	BY	DESCRIPTION

	NAMES	DATES
DRAWN BY	CAL/SDM	01-07
CHECKED BY	TED	01-07
DESIGNED BY	HGL	01-07
CHECKED BY	TED	01-07
APPROVED BY	T.E. Davidson P.E.	

ENGINEER OF RECORD:
PARSONS
2420 LAKEMONT AVE., SUITE 450, ORLANDO, FL 32814
PHONE: (407) 702-6800
CERTIFICATE OF AUTHORIZATION NO. 1838
THOMAS E. DAVIDSON, P.E. LIC. NO. 47131

EXPRESSWAY AUTHORITY

ROAD NO.	SR 414
COUNTY	ORANGE
FINANCIAL PROJECT ID	414-211

SHEET TITLE: FRAMING DETAILS

PROJECT NAME: MAITLAND BLVD. EXTENSION
SR 414 OVER SR 500 (US 441)

SHEET NO. B3-27

33259 1/5/2007 4:15:54 PM P:\646262\646262\struct\3SR441\b3StiffenerOl.dgn

PARSONS

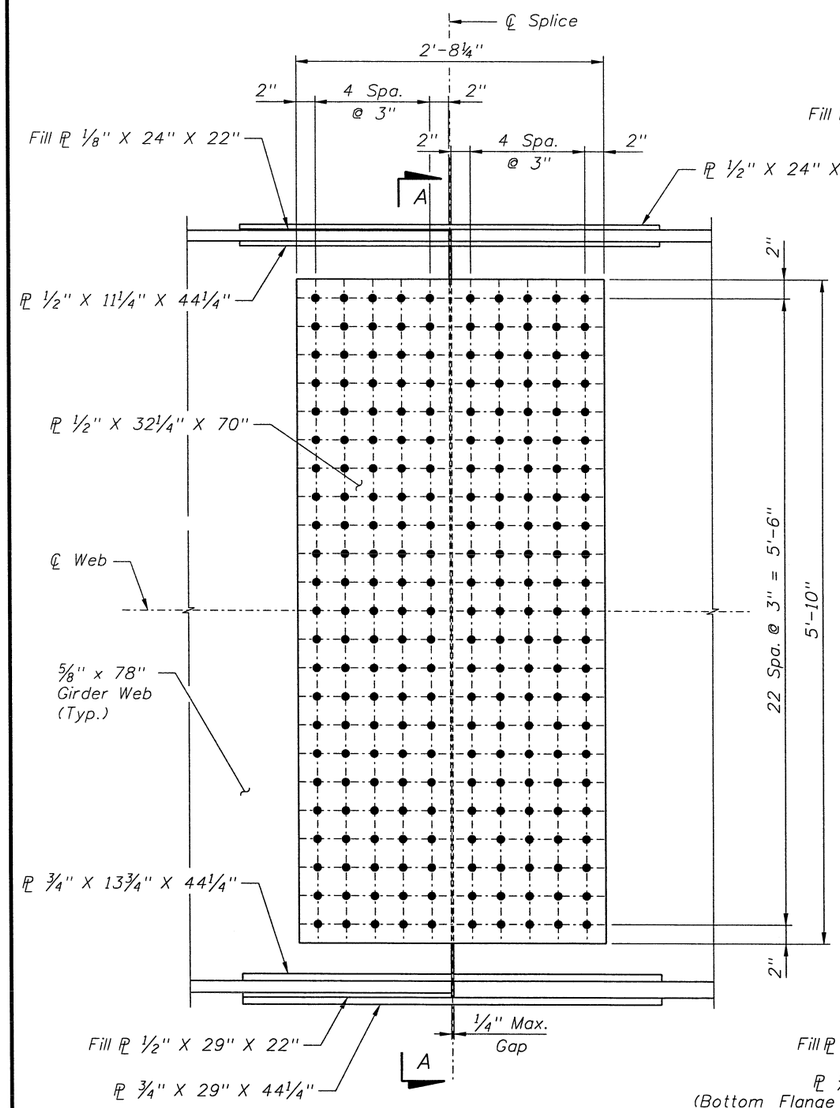

ELEVATION

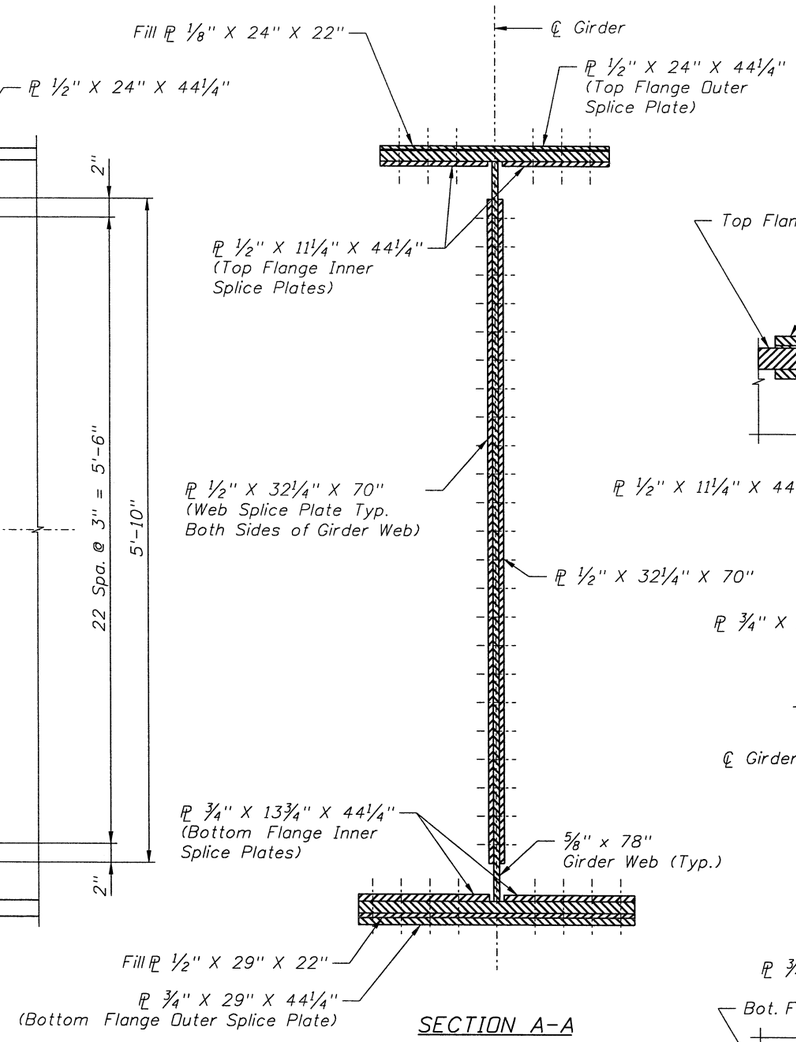

SECTION A-A

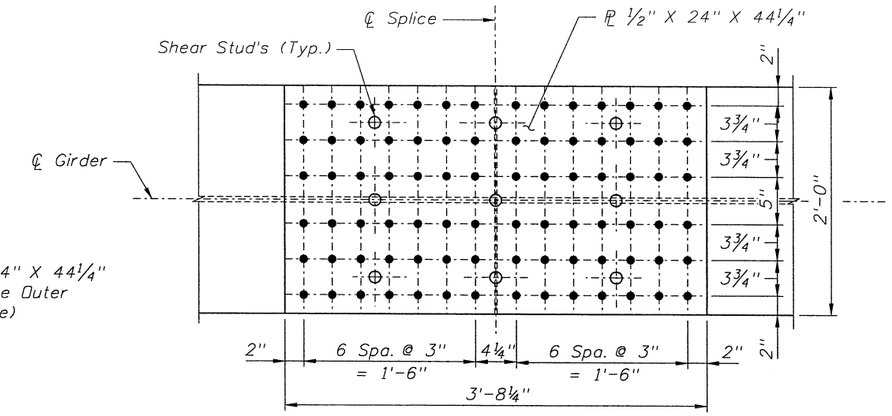

TOP FLANGE SPLICE PLAN

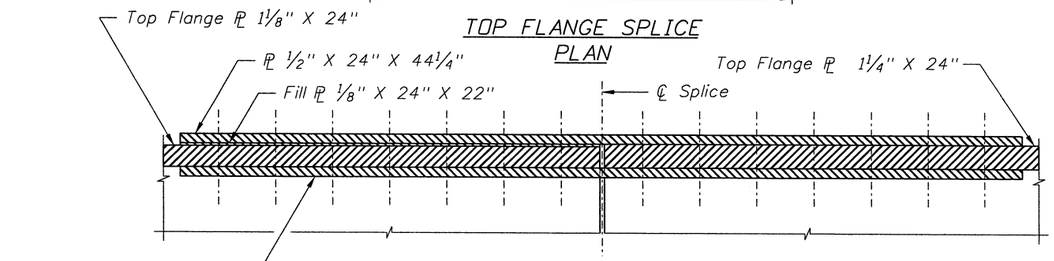

TOP FLANGE SPLICE ELEVATION

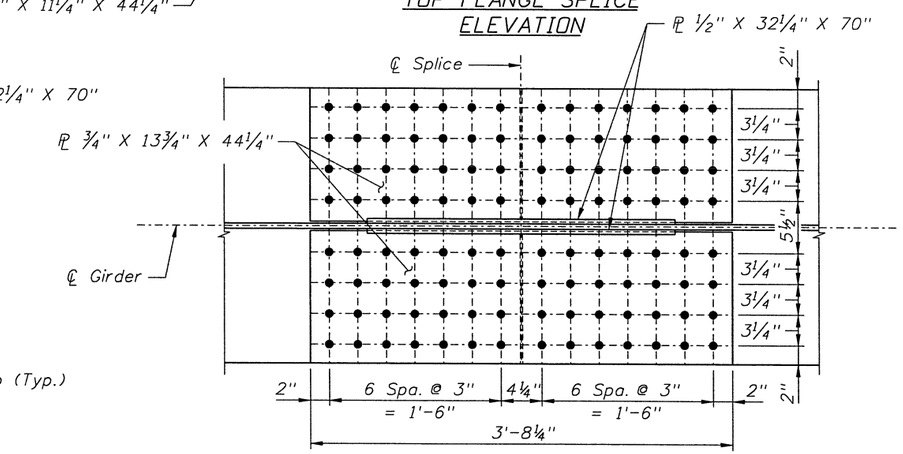

BOTTOM FLANGE SPLICE PLAN

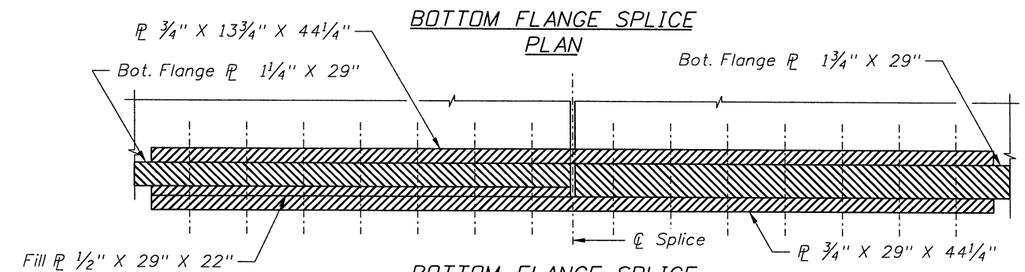

BOTTOM FLANGE SPLICE ELEVATION

BRIDGE NO. 750743

REVISIONS					
DATE	BY	DESCRIPTION	DATE	BY	DESCRIPTION

	NAMES	DATES
DRAWN BY	SDM/CAL	01-07
CHECKED BY	TED	01-07
DESIGNED BY	HGL	01-07
CHECKED BY	TED	01-07
APPROVED BY	T.E. Davidson P.E.	

ENGINEER OF RECORD:
PARSONS
2420 LAKEMONT AVE., SUITE 450, ORLANDO, FL 32814
PHONE: (407) 702-6800
CERTIFICATE OF AUTHORIZATION NO. 1838
THOMAS E. DAVIDSON, P.E. LIC. NO. 47131

EXPRESSWAY AUTHORITY

ROAD NO.	SR 414
COUNTY	ORANGE
FINANCIAL PROJECT ID	414-211

SHEET TITLE: BOLTED FIELD SPLICE

PROJECT NAME: MAITLAND BLVD. EXTENSION
SR 414 OVER SR 500 (US 441)

SHEET NO. B3-28

33259 1/5/2007 4:15:56 PM P:\646262\646262\struct\3SR441\b3FieldSplice01.dgn

PARSONS

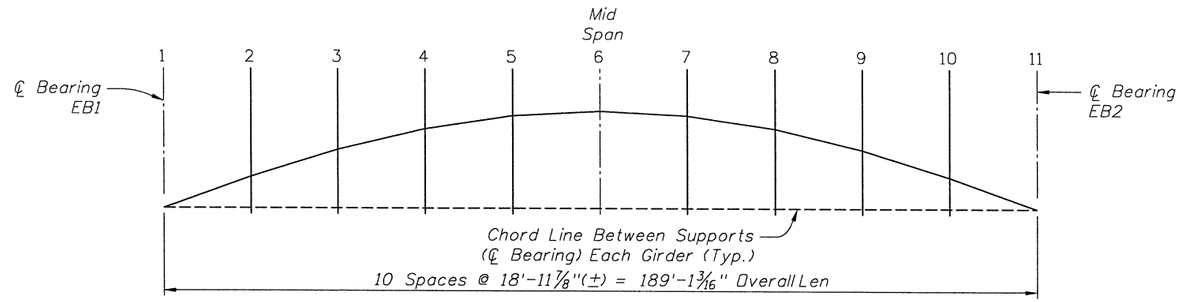

Girder	Item	℄ Bridge EB1					Mid Span					℄ Bridge EB2
		1	2	3	4	5	6	7	8	9	10	11
1	Steel DL	0.000	1.049	1.962	2.671	3.118	3.271	3.118	2.674	1.965	1.052	0.000
	Slab DL	0.000	3.143	5.875	7.989	9.319	9.774	9.318	7.993	5.879	3.151	0.000
	Superimposed DL	0.000	0.166	0.311	0.423	0.493	0.518	0.494	0.424	0.312	0.167	0.000
	Geometric Camber	0.000	0.287	0.512	0.671	0.766	0.797	0.765	0.669	0.509	0.285	0.000
	Total Camber	0.000	4.645	8.660	11.753	13.696	14.360	13.695	11.759	8.665	4.656	0.000
2	Steel DL	0.000	1.042	1.951	2.655	3.098	3.249	3.097	2.653	1.951	1.044	0.000
	Slab DL	0.000	3.147	5.883	7.998	9.332	9.784	9.331	7.998	5.887	3.156	0.000
	Superimposed DL	0.000	0.165	0.309	0.421	0.491	0.515	0.491	0.421	0.309	0.166	0.000
	Geometric Camber	0.000	0.283	0.504	0.660	0.755	0.785	0.753	0.659	0.501	0.282	0.000
	Total Camber	0.000	4.638	8.648	11.734	13.676	14.333	13.672	11.730	8.649	4.648	0.000
3	Steel DL	0.000	1.037	1.943	2.643	3.086	3.235	3.085	2.641	1.943	1.039	0.000
	Slab DL	0.000	3.151	5.899	8.017	9.356	9.808	9.357	8.015	5.903	3.160	0.000
	Superimposed DL	0.000	0.165	0.308	0.419	0.489	0.513	0.489	0.419	0.308	0.165	0.000
	Geometric Camber	0.000	0.280	0.497	0.651	0.745	0.774	0.742	0.650	0.494	0.278	0.000
	Total Camber	0.000	4.632	8.648	11.730	13.676	14.330	13.674	11.724	8.648	4.642	0.000
4	Steel DL	0.000	1.034	1.939	2.635	3.079	3.227	3.079	2.637	1.939	1.035	0.000
	Slab DL	0.000	3.159	5.916	8.034	9.382	9.834	9.384	8.042	5.919	3.162	0.000
	Superimposed DL	0.000	0.164	0.308	0.418	0.488	0.512	0.488	0.419	0.308	0.164	0.000
	Geometric Camber	0.000	0.275	0.488	0.641	0.732	0.762	0.731	0.638	0.486	0.272	0.000
	Total Camber	0.000	4.632	8.651	11.728	13.681	14.335	13.682	11.736	8.652	4.633	0.000
5	Steel DL	0.000	1.035	1.936	2.633	3.075	3.224	3.076	2.636	1.937	1.032	0.000
	Slab DL	0.000	3.174	5.930	8.057	9.402	9.857	9.406	8.066	5.933	3.166	0.000
	Superimposed DL	0.000	0.165	0.308	0.418	0.488	0.512	0.488	0.419	0.308	0.164	0.000
	Geometric Camber	0.000	0.270	0.481	0.632	0.722	0.751	0.720	0.630	0.479	0.269	0.000
	Total Camber	0.000	4.644	8.655	11.740	13.686	14.342	13.690	11.751	8.656	4.631	0.000
6	Steel DL	0.000	1.036	1.936	2.634	3.072	3.223	3.074	2.636	1.936	1.033	0.000
	Slab DL	0.000	3.183	5.940	8.076	9.414	9.873	9.419	8.081	5.942	3.174	0.000
	Superimposed DL	0.000	0.165	0.308	0.418	0.488	0.512	0.488	0.419	0.308	0.164	0.000
	Geometric Camber	0.000	0.267	0.475	0.622	0.711	0.740	0.709	0.620	0.471	0.264	0.000
	Total Camber	0.000	4.652	8.658	11.750	13.685	14.348	13.690	11.754	8.656	4.635	0.000
7	Steel DL	0.000	1.036	1.936	2.635	3.071	3.224	3.073	2.635	1.936	1.036	0.000
	Slab DL	0.000	3.186	5.944	8.084	9.416	9.884	9.423	8.084	5.944	3.186	0.000
	Superimposed DL	0.000	0.165	0.308	0.419	0.488	0.512	0.488	0.419	0.308	0.165	0.000
	Geometric Camber	0.000	0.264	0.467	0.613	0.700	0.728	0.698	0.610	0.464	0.261	0.000
	Total Camber	0.000	4.651	8.655	11.751	13.674	14.348	13.682	11.747	8.651	4.648	0.000

Girder	Item	℄ Bridge EB1					Mid Span					℄ Bridge EB2
		1	2	3	4	5	6	7	8	9	10	11
8	Steel DL	0.000	1.036	1.936	2.636	3.074	3.224	3.073	2.634	1.936	1.036	0.000
	Slab DL	0.000	3.184	5.942	8.080	9.419	9.877	9.415	8.076	5.940	3.183	0.000
	Superimposed DL	0.000	0.165	0.308	0.419	0.488	0.512	0.488	0.418	0.308	0.165	0.000
	Geometric Camber	0.000	0.258	0.460	0.603	0.689	0.717	0.687	0.601	0.457	0.257	0.000
	Total Camber	0.000	4.643	8.645	11.737	13.671	14.330	13.663	11.729	8.640	4.641	0.000
9	Steel DL	0.000	1.033	1.937	2.636	3.076	3.225	3.075	2.633	1.936	1.035	0.000
	Slab DL	0.000	3.168	5.933	8.066	9.406	9.861	9.402	8.057	5.930	3.174	0.000
	Superimposed DL	0.000	0.164	0.308	0.419	0.488	0.512	0.488	0.418	0.308	0.165	0.000
	Geometric Camber	0.000	0.255	0.453	0.594	0.678	0.706	0.677	0.592	0.449	0.253	0.000
	Total Camber	0.000	4.620	8.631	11.715	13.648	14.304	13.641	11.700	8.623	4.627	0.000
10	Steel DL	0.000	1.035	1.939	2.637	3.079	3.228	3.079	2.635	1.939	1.034	0.000
	Slab DL	0.000	3.162	5.919	8.042	9.384	9.835	9.382	8.034	5.916	3.159	0.000
	Superimposed DL	0.000	0.164	0.308	0.419	0.488	0.512	0.488	0.418	0.308	0.164	0.000
	Geometric Camber	0.000	0.251	0.446	0.586	0.667	0.695	0.666	0.582	0.442	0.248	0.000
	Total Camber	0.000	4.612	8.611	11.683	13.619	14.271	13.614	11.670	8.604	4.606	0.000
11	Steel DL	0.000	1.039	1.943	2.641	3.085	3.235	3.086	2.643	1.943	1.036	0.000
	Slab DL	0.000	3.161	5.903	8.015	9.357	9.806	9.356	8.017	5.899	3.148	0.000
	Superimposed DL	0.000	0.165	0.308	0.419	0.489	0.513	0.489	0.419	0.308	0.164	0.000
	Geometric Camber	0.000	0.247	0.439	0.576	0.658	0.685	0.656	0.573	0.435	0.245	0.000
	Total Camber	0.000	4.612	8.593	11.650	13.590	14.238	13.587	11.652	8.586	4.593	0.000
12	Steel DL	0.000	1.044	1.951	2.653	3.097	3.248	3.098	2.655	1.951	1.042	0.000
	Slab DL	0.000	3.156	5.887	7.998	9.331	9.780	9.332	7.998	5.883	3.147	0.000
	Superimposed DL	0.000	0.166	0.309	0.421	0.491	0.514	0.491	0.421	0.309	0.165	0.000
	Geometric Camber	0.000	0.243	0.433	0.568	0.648	0.674	0.647	0.565	0.429	0.240	0.000
	Total Camber	0.000	4.609	8.580	11.640	13.567	14.217	13.567	11.638	8.572	4.595	0.000
13	Steel DL	0.000	1.052	1.965	2.674	3.118	3.270	3.118	2.671	1.962	1.049	0.000
	Slab DL	0.000	3.151	5.879	7.993	9.316	9.770	9.319	7.989	5.875	3.143	0.000
	Superimposed DL	0.000	0.167	0.312	0.424	0.494	0.517	0.493	0.423	0.311	0.166	0.000
	Geometric Camber	0.000	0.239	0.426	0.558	0.637	0.663	0.636	0.556	0.423	0.237	0.000
	Total Camber	0.000	4.609	8.581	11.648	13.565	14.220	13.566	11.638	8.571	4.596	0.000

Note: Camber Information is based on a Grid Analysis which assumes the Cross frames are rigidly connected to the Girders during the one continuous Wet Pour for entire deck.

BRIDGE NO. 750743

REVISIONS

DATE	BY	DESCRIPTION	DATE	BY	DESCRIPTION

	NAMES	DATES
DRAWN BY	MC	01-07
CHECKED BY	HGL	01-07
DESIGNED BY	NJB	01-07
CHECKED BY	TED	01-07
APPROVED BY	T.E. Davidson P.E.	

ENGINEER OF RECORD:
PARSONS
2420 LAKEMONT AVE., SUITE 450, ORLANDO, FL 32814
PHONE: (407) 702-6800
CERTIFICATE OF AUTHORIZATION NO. 1838
THOMAS E. DAVIDSON, P.E. LIC. NO. 47131

EXPRESSWAY AUTHORITY

ROAD NO.	SR 414
COUNTY	ORANGE
FINANCIAL PROJECT ID	414-211

SHEET TITLE: CAMBER DIAGRAM

PROJECT NAME: MAITLAND BLVD. EXTENSION
SR 414 OVER SR 500 (US 441)

SHEET NO. B3-29

PARSONS

33259 1/5/2007 4:15:58 PM P:\646262\646262\struct\3SR441\B3CAMBER01.DGN

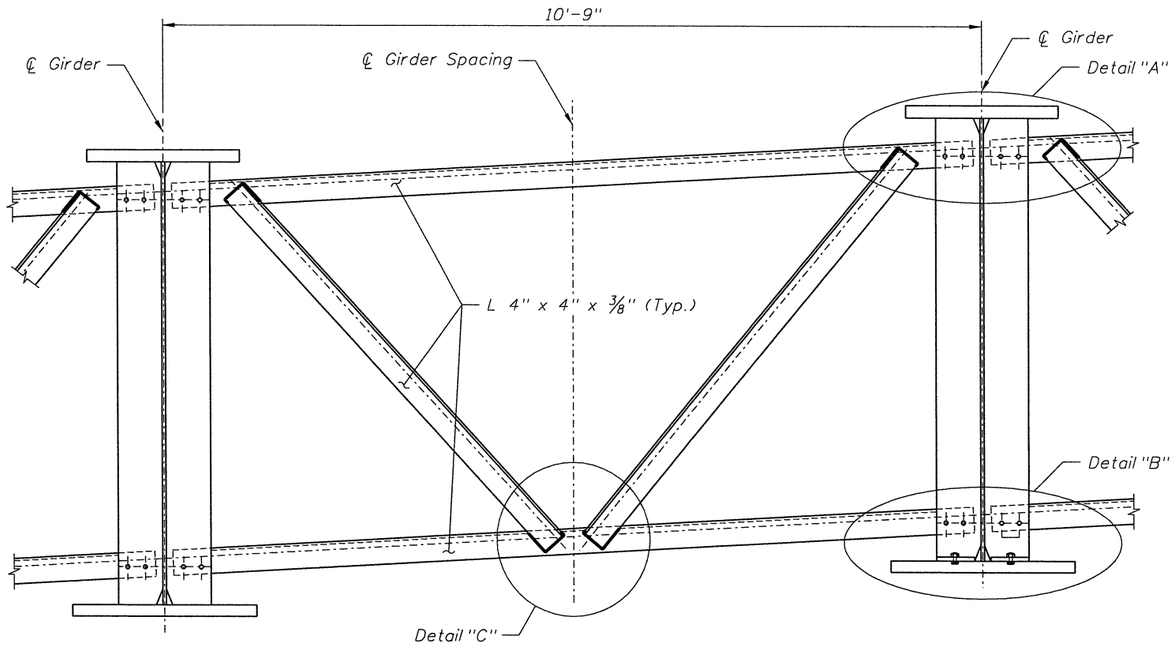

CROSS FRAME CONNECTION

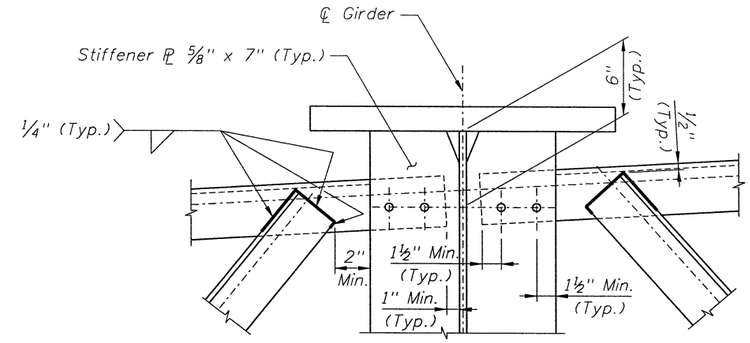

DETAIL "A"

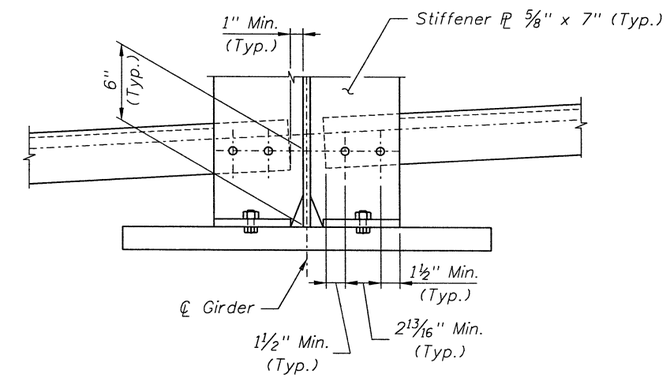

DETAIL "B"

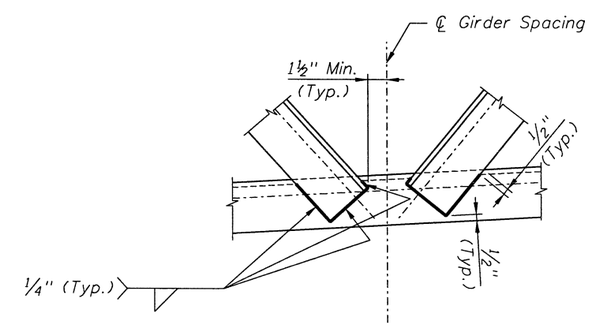

DETAIL "C"

Notes:

1. Refer to Framing Plan and Girder Elevation Sheet for Crossframe spacing.
2. Refer to Framing Detail Sheet for additional connection detals.

BRIDGE NO. 750743

REVISIONS					
DATE	BY	DESCRIPTION	DATE	BY	DESCRIPTION

	NAMES	DATES
DRAWN BY	SDM	01-07
CHECKED BY	TED	01-07
DESIGNED BY	HGL	01-07
CHECKED BY	TED	01-07
APPROVED BY	T.E. Davidson P.E.	

ENGINEER OF RECORD:
PARSONS
2420 LAKEMONT AVE., SUITE 450, ORLANDO, FL 32814
PHONE: (407) 702-6800
CERTIFICATE OF AUTHORIZATION NO. 1838
THOMAS E. DAVIDSON, P.E. LIC. NO. 47131

EXPRESSWAY AUTHORITY

ROAD NO.	SR 414
COUNTY	ORANGE
FINANCIAL PROJECT ID	414-211

SHEET TITLE: CROSS FRAME DETAILS (1 OF 2)

PROJECT NAME: MAITLAND BLVD. EXTENSION
SR 414 OVER SR 500 (US 441)

SHEET NO. B3-30

33259 1/5/2007 4:15:58 PM P:\646262\646262\struct\3SR441\b3CrossFrameDet01.dgn

PARSONS

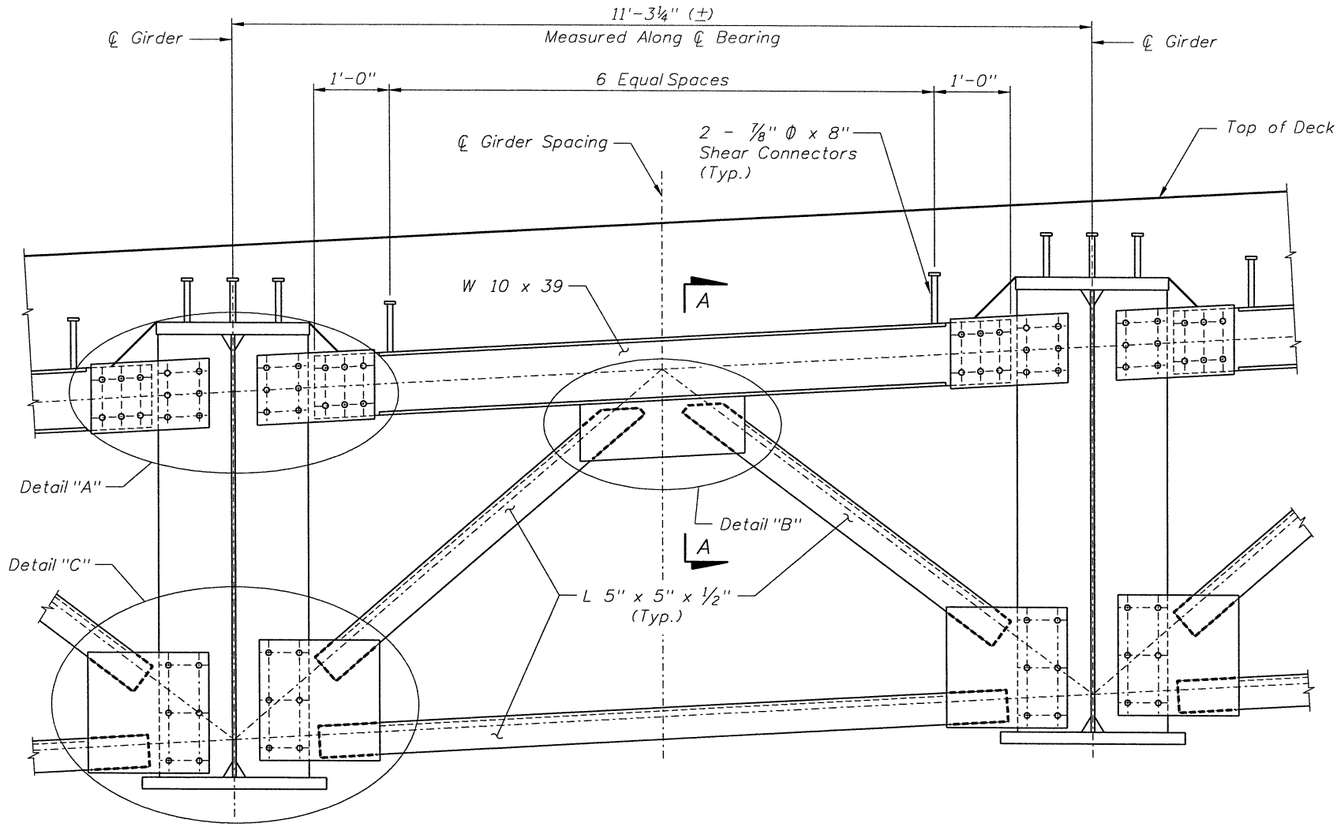

END CROSS FRAME CONNECTION

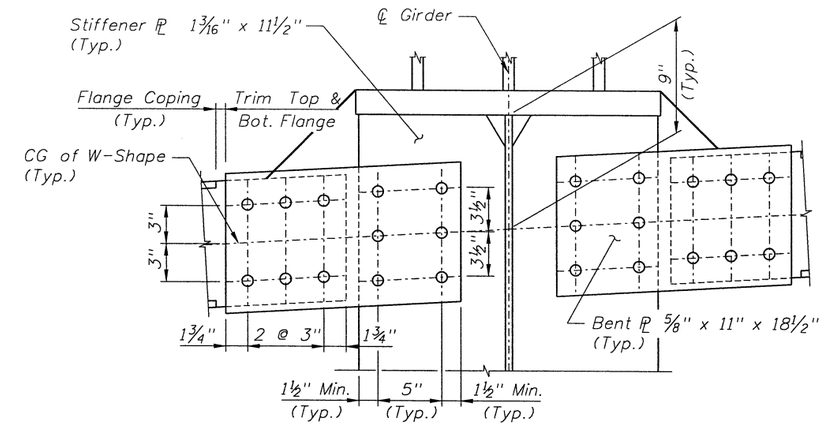

DETAIL "A"

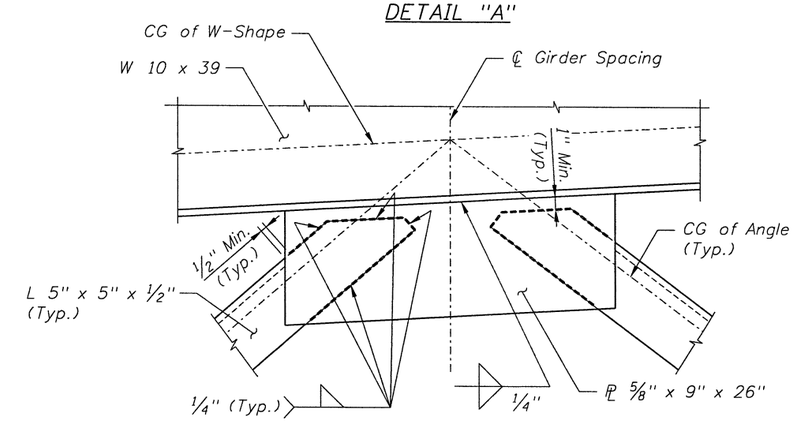

DETAIL "B"

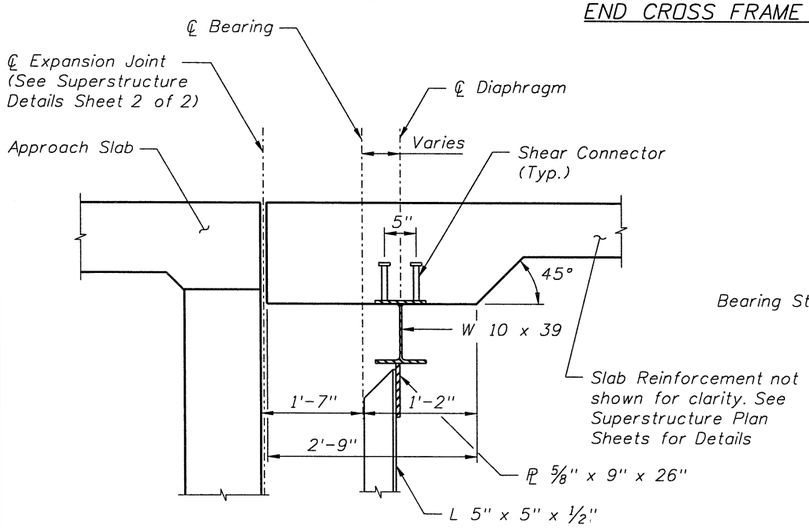

SECTION A-A

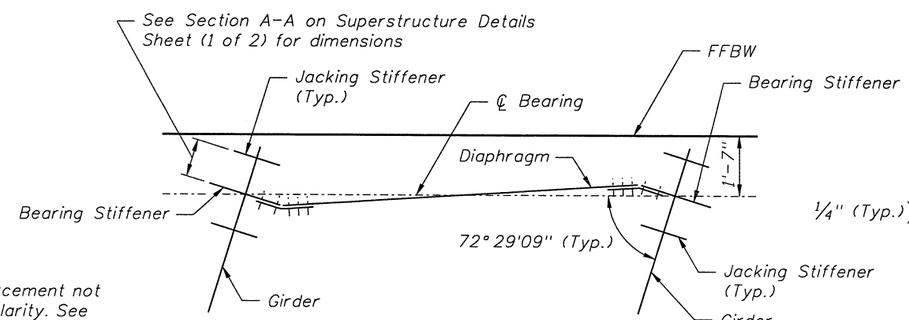

PLAN
(Schematic)

Notes:
1. For General Notes, see Framing Plan and Girder Elevation sheet.
2. For Jacking Loads, see Superstructure Section sheets.

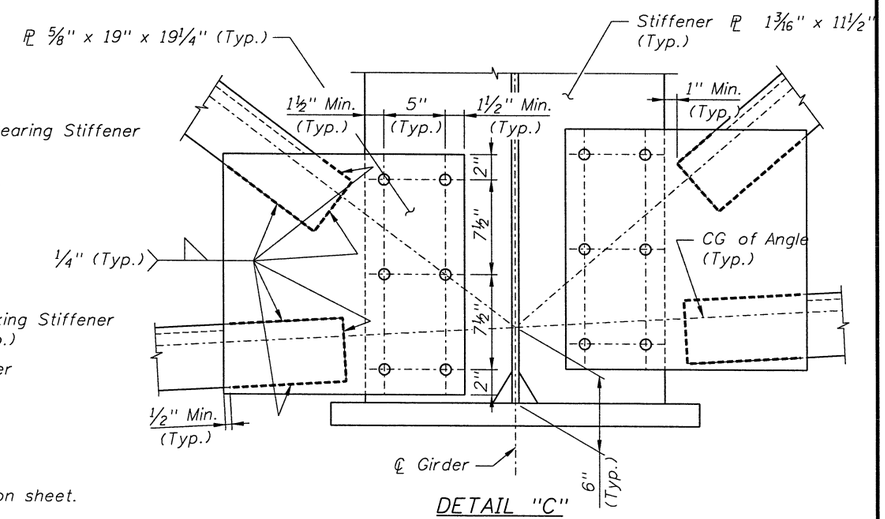

DETAIL "C"

BRIDGE NO. 750743

REVISIONS					
DATE	BY	DESCRIPTION	DATE	BY	DESCRIPTION

	NAMES	DATES
DRAWN BY	SDM	01-07
CHECKED BY	TED	01-07
DESIGNED BY	HGL	01-07
CHECKED BY	TED	01-07
APPROVED BY	T.E. Davidson P.E.	

ENGINEER OF RECORD:
PARSONS
2420 LAKEMONT AVE., SUITE 450, ORLANDO, FL 32814
PHONE: (407) 702-6800
CERTIFICATE OF AUTHORIZATION NO. 1838
THOMAS E. DAVIDSON, P.E. LIC. NO. 47131

EXPRESSWAY AUTHORITY

ROAD NO.	SR 414
COUNTY	ORANGE
FINANCIAL PROJECT ID	414-211

SHEET TITLE: CROSS FRAME DETAILS (2 OF 2)

PROJECT NAME: MAITLAND BLVD. EXTENSION
SR 414 OVER SR 500 (US 441)

SHEET NO. B3-31

33259 1/5/2007 4:15:59 PM P:\646262\646262\struct\3SR441\b3CrossFrameDet02.dgn

PARSONS

MARK SIZE	MARK DES	FT/IN LENGTH	NO BARS	TYP BARS	STY A	STY G	FT/IN B	C	D	E	F	H	J	K	NO N	ANG Ø
LOCATION: END BENTS 1 & 2														REQUIRED = 02		
9	H01	150'-11"	12	2	3	3	5'-0"	140 '-11"	1'-7½"	0'-6½"					2	
9	H02	5'-7"	38	18			2'-4¾"		1'-5"						2	
5	H03	145'-3"	12	2			2'-2"	140'-11"								
5	H04	3'-8"	24	12			2'-2"	1'-6"								
9	H05	6'-6"	24	12			5'-0"	1'-6"								
5	H06	5'-4"	1	1			5'-3½"									
5	H07	6'-5"	7	1			6'-4¼"									
5	H08	4'-3"	1	1			4'-2¾"									
5	H09	5'-4"	7	1			5'-3¼"									
5	V01	6'-10"	376	1			6'-9½"									
5	V02	3'-9"	376	1			3'-9"									
6	V03	2'-3"	30	1			2'-3"									
5	V04	10'-4"	8	1			10'-3½"									
5	V05	10'-7"	16	1			10'-6½"									
					4	4										
5	W01	14'-0"	198	4			2'-11"	3'-7"								
5	W02	11'-7"	39	5			2'-11"	3'-7"								
4	W03	2'-6"	65	1			2'-6"									
4	W04	5'-1"	78	11	4	4	2'-3"	1'-5"								
5	W05	14'-5"	4	4			2'-11"	3'-9½"								
4	M07	3'-6"	16	1			3'-6"									
LOCATION: DECK														REQUIRED = 01		
5	A01	141'-11"	602	2			2'-2"	137'-6¾"							2	18
5	A02	From	48	2			2'-2"	From							2	
		139'-0"						134'-7½"								
		to						to								
		122'-9"						118'-4¾"								
5	A03	From	148	2			2'-2"	From							1	
		120'-0"						117'-10"								
		to						to								
		62'-9"						60'-6¾"			4'-1¼"					
5	A04	From	140	1			From		1'-0½"	1'-0½"						
		60'-0"					60'-0"									
		to					to									
		5'-0"			1		5'-0"									
5	A05	11'-3"	770	17			10'-7¾"									
5	A06	8'-3"	120	1			8'-2¾"								2	
5	A07	60'-0"	12	12			58'-5"	1'-7"								
5	A08	28'-5"	6	1			28'-5"									
4	C01	197'-6"	370	2			1'-9"	192'-3"							3	
4	C02	10'-9"	740	1			10'-9"									
4	C03	9'-4"	216	25			1'-0½"	2'-8¾"								
LOCATION: BEGIN & END APPROACH SLABS														REQUIRED = 02		
5	A1	31'-0"	138	1			30'-11½"									
8	A2	31'-0"	184	1			30'-11½"									
								144'-1"							2	
5	B	148'-5"	71	2			2'-2"									
5	C	5'-0"	62	1			5'-0"									

MARK SIZE	MARK DES	FT/IN LENGTH	NO BARS	TYP BARS	STY A	STY G	FT/IN B	C	D	E	F	H	J	K	NO N	ANG Ø
LOCATION:														REQUIRED =		

BRIDGE NO. 750743

REVISIONS

DATE	BY	DESCRIPTION	DATE	BY	DESCRIPTION

	NAMES	DATES
DRAWN BY	JDB	01-07
CHECKED BY	STP	01-07
DESIGNED BY	NJB	01-07
CHECKED BY	TED	01-07
APPROVED BY	T.E. Davidson P.E.	

ENGINEER OF RECORD:
PARSONS
2420 LAKEMONT AVE., SUITE 450, ORLANDO, FL 32814
PHONE: (407) 702-6800
CERTIFICATE OF AUTHORIZATION NO. 1838
THOMAS E. DAVIDSON, P.E. LIC. NO. 47131

EXPRESSWAY AUTHORITY

ROAD NO.	SR 414
COUNTY	ORANGE
FINANCIAL PROJECT ID	414-211

SHEET TITLE: REINFORCING BAR LIST

PROJECT NAME: MAITLAND BLVD. EXTENSION
SR 414 OVER SR 500 (US 441)

SHEET NO. B3-32

PARSONS

Load Rating Summary for Steel Girder Bridges

Table 1 - LRFR using Appendix D.6 (LFD or ASD)

Level	Vehicle	Weight (tons)	Load Factors		Minimum. Rating Factor	Moment (Strength) or Stress (Service)						Shear (Strength)				Comments: Interior/exterior beam DF method if other than Standard Spec. Other appropriate comments
			LL	DL		Distribution Factor (DF)	Rating Factor	Tons	Location	Dimension	Distribution Factor (DF)	Rating Factor	Tons	Location	Dimension	
Inventory (Inv)	HS-20	36.0	2.17	1.30	N/A	N/A	N/A	N/A	N/A	N/A	N/A	N/A	N/A	N/A	N/A	
Operating (Op)	HS-20	36.0	1.30	1.30	N/A	N/A	N/A	N/A	N/A	N/A	N/A	N/A	N/A	N/A	N/A	
	SU4	35.0	1.30	1.30	N/A	N/A	N/A	N/A	N/A	N/A	N/A	N/A	N/A	N/A	N/A	
	C5	36.6	1.30	1.30	N/A	N/A	N/A	N/A	N/A	N/A	N/A	N/A	N/A	N/A	N/A	
	ST5	40.0	1.30	1.30	N/A	N/A	N/A	N/A	N/A	N/A	N/A	N/A	N/A	N/A	N/A	

Load Rating Summary for Steel Girder Bridges

Table 2 - LRFR w/o Appendix D.6 (LFD)

Level	Limit State	Vehicle	Weight (tons)	Load Factors			Minimum. Rating Factor	Moment (Strength) or Stress (Service)					Shear (Strength)					Comments: Interior/exterior beam DF method if other than LRFD. Other appropriate comments
				LL	DC	DW		Distribution Factor (DF)	Rating Factor	Tons	Location	Dimension	Distribution Factor (DF)	Rating Factor	Tons	Location	Dimension	
Design Load Rating	Strength I (Inv)	HL-93	N/A	1.75	1.25	1.50	1.00	0.942	1.25	N/A	B	X = 94.55'	1.001	1.12	N/A	A	W = 28.36'	Exterior Beam controls for Moment, Interior Beam controls for Shear *
	Strength I (Op)	HL-93	N/A	1.35	1.25	1.50	1.00	0.942	1.62	N/A	B	X = 94.55'	1.001	1.45	N/A	A	W = 28.36'	
	Sevice II (Inv)	HL-93	N/A	1.30	1.00	1.00	1.00	0.942	1.19	N/A	B	X = 94.55'	N/A	N/A	N/A	N/A	N/A	
	Service II (Op)	HL-93	N/A	1.00	1.00	1.00	1.00	0.942	1.55	N/A	B	X = 94.55'	N/A	N/A	N/A	N/A	N/A	
Legal Load Rating	Strength I	SU4	35.0	1.35	1.25	1.50	N/A	N/A	N/A	N/A	N/A	N/A	N/A	N/A	N/A	N/A	N/A	
	Strength I	C5	36.6	1.35	1.25	1.50	N/A	N/A	N/A	N/A	N/A	N/A	N/A	N/A	N/A	N/A	N/A	
	Strength I	ST5	40.0	1.35	1.25	1.50	N/A	N/A	N/A	N/A	N/A	N/A	N/A	N/A	N/A	N/A	N/A	Note: Legal Load Not Required
	Service II	SU4	35.0	1.30	1.00	1.00	N/A	N/A	N/A	N/A	N/A	N/A	N/A	N/A	N/A	N/A	N/A	
	Service II	C5	36.6	1.30	1.00	1.00	N/A	N/A	N/A	N/A	N/A	N/A	N/A	N/A	N/A	N/A	N/A	
	Service II	ST5	40.0	1.30	1.00	1.00	N/A	N/A	N/A	N/A	N/A	N/A	N/A	N/A	N/A	N/A	N/A	
Permit Load Rating	Strength II	FL120	60.0	1.35	1.25	1.50	1.00	0.942	1.64	98.4	B	X = 94.55'	1.001	1.37	82.2	A	W = 28.36'	
	Service II	FL120	60.0	0.90	1.00	1.00	1.00	0.942	1.57	94.2	B	X = 94.55'	N/A	N/A	N/A	N/A	N/A	

General Notes:
1. This table is based on the requirements established in the Jan/July 2006 "Structures Manual".

Table 2 Notes:
1. Permit capacity is determined by using the permit vehicle in all lanes.
2. If the Design Operating Load Rating is greater than 1, Load Rating using Legal Vehicles SU4, C5, and ST5 is not required.

Notes to Designer:
1. Modify the Rating Location sketch to resemble the bridge being rated.
2. Fill in the date in General Note number 1 above.
3. For Girder, Floorbeam, Stringer Bridges, use one Summary sheet for each member type."
4. Design Service Limit State ratings are only required for compact members.
5. See Volume 8 of the "Structures Manual" for appropriate rating methods.

* Exterior Beam includes 500 lb/ft Superimposed Load for Aesthetics.

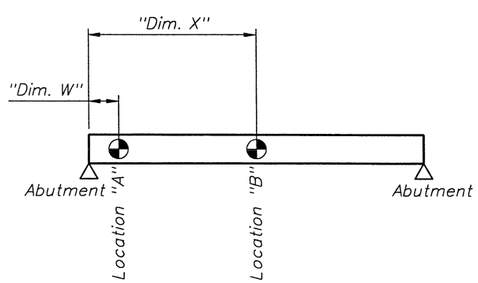

RATING LOCATIONS

Abbreviations:

Inv - Inventory

Op - Operating

Controlling Load Rating			
Limit State	Vehicle	Weight (Tons)	Rating Factor
Strength I (Inv)	HL-93	N/A	1.12

BRIDGE NO. 750743

REVISIONS

DATE	BY	DESCRIPTION	DATE	BY	DESCRIPTION

	NAMES	DATES
DRAWN BY	CAL	01-07
CHECKED BY	HGL	01-07
DESIGNED BY	TED	01-07
CHECKED BY	HGL	01-07
APPROVED BY	T.E. Davidson P.E.	

ENGINEER OF RECORD:
PARSONS
2420 LAKEMONT AVE., SUITE 450, ORLANDO, FL 32814
PHONE: (407) 702-6800
CERTIFICATE OF AUTHORIZATION NO. 1838
THOMAS E. DAVIDSON, P.E. LIC. NO. 47131

EXPRESSWAY AUTHORITY

ROAD NO.	SR 414
COUNTY	ORANGE
FINANCIAL PROJECT ID	414-211

SHEET TITLE: LRFR - BRIDGE LOAD RATING SUMMARY

PROJECT NAME: MAITLAND BLVD. EXTENSION SR 414 OVER SR 500 (US 441)

SHEET NO. B3-33

33259 1/5/2007 4:16:01 PM P:\646262\646262\struct\3SR441\b3MlscStr_LRFR.dgn

PARSONS

INDEX OF BRIDGE SHEETS

GENERAL SHEETS

A-1 Index of Bridge Sheets
A-2 General Notes
A-3 Typical Notes And Details For AASHTO Type II, III And IV Prestressed Beams-Index 100
A-4 Typical Notes And Details For Florida Bulb T-54,63&72 Prestressed Beams-Index 110
A-5 Composite Neoprene Bearing Pads-Index 200
A-6 12", 14", 18", 20", 24" And 30" Prestressed Concrete Piles (1 Of 2)-Index 600
A-7 12", 14", 18", 20", 24" And 30" Prestressed Concrete Piles (2 Of 2)-Index 600
A-8 Traffic Railing Barrier-Index 700
A-9 Pedestrian / Bicycle Railing-Index 720
A-10 Standard Bar Bending Details - Index 1300

MAITLAND BOULEVARD OVER LAKE BOSSE (NO. 770074)

B-1 General Plan and Elevation
B-2 Temporary Construction Road
B-3 Construction Sequence (Scheme I)
B-4 Construction Sequence (Scheme II)
B-5 Bridge Hydraulic Recommendations
B-6 Report of Core Borings
B-7 Report of Core Borings
B-8 Report of Core Borings
B-9 Generalized Subsurface Soil Conditions
B-10 Foundation Layout (1 Of 1)
B-11 Foundation Layout (2 Of 2)
B-12 End Bent No. 1 (1 of 2)
B-13 End Bent No. 1 (2 of 2)
B-14 End Bent No. 7 (1 of 2)
B-15 End Bent No. 7 (2 of 2)
B-16 End Bent Details
B-17 Pier No. 2 (1 Of 2)
B-18 Pier No. 2 (2 Of 2)
B-19 Pier No. 3 (1 Of 2)
B-20 Pier No. 3 (2 Of 2)
B-21 Pier No. 4 (1 Of 2)
B-22 Pier No. 4 (2 Of 2)
B-23 Pier No. 5 (1 Of 2)
B-24 Pier No. 5 (2 Of 2)
B-25 Pier No. 6 (1 Of 2)
B-26 Pier No. 6 (2 Of 2)
B-27 Pier Details (1 Of 2)
B-28 Pier Details (2 Of 2)
B-29 Finish Grade Elevations (1 Of 3)
B-30 Finish Grade Elevations (2 Of 3)
B-31 Finish Grade Elevations (3 Of 3)
B-32 Superstructure Plan - Span 1 And 2
B-33 Superstructure Plan - Span 3
B-34 Superstructure Plan - Span 4 And 5
B-35 Superstructure Plan - Span 6
B-36 Superstructure Section Spans 1,2,4,5&6
B-37 Superstructure Section Span 3
B-38 Superstructure Details
B-39 Framing Plan - Span 3
B-40 Girder Elevation
B-41 Girder Details (1 Of 2)
B-42 Girder Details (2 Of 2)
B-43 Bearing Details - Span 3
B-44 Miscellaneous Details (1 Of 4)
B-45 Miscellaneous Details (2 Of 4)
B-46 Miscellaneous Details (3 Of 4)
B-47 Miscellaneous Details (4 Of 4)
B-48 Florida Bulb-T 72
B-49 Reinforcing Bar List (1 Of 3)
B-50 Reinforcing Bar List (2 Of 3)
B-51 Reinforcing Bar List (3 Of 3)

MAITLAND BOULEVARD OVER LITTLE WEKIVA RIVER (NO. 770075)

C-1 General Plan and Elevation
C-2 Bridge Hydraulic Recommendations
C-3 Report of Core Borings
C-4 Report of Core Borings
C-5 Foundation Layout
C-6 End Bent No. 1 (1 of 2)
C-7 End Bent No. 1 (2 of 2)
C-8 End Bent No. 2 (1 of 2)
C-9 End Bent No. 2 (2 of 2)
C-10 End Bent Details
C-11 Finish Grade Elevations
C-12 Superstructure Plan
C-13 Superstructure Section
C-14 Superstructure Details
C-15 Miscellaneous Bridge Details (1 Of 2)
C-16 Miscellaneous Bridge Details (2 Of 2)
C-17 AASHTO Type IV Beams - Index S-105
C-18 Reinforcing Bar List

20930-1
RECEIVED
AUG 25 1995
4-095-050SAG
RECORDS
ORLANDO

RETAINING WALLS

W-1 General Notes And Section
W-2 Report Of Core Borings
W-3 Report Of Core Borings
W-4 Report Of Core Borings
W-5 Report Of Core Borings
W-6 Retaining Wall No. 1 Alignment
W-7 Retaining Wall No. 2 Alignment
W-8 Retaining Wall No. 1 & No. 2 Details (1 Of 2)
W-9 Retaining Wall No. 1 & No. 2 Details (2 Of 2)
W-10 Retaining Wall No. 3 Alignment
W-11 Retaining Wall No. 4 Alignment
W-12 Retaining Wall No. 3 & No. 4 Details
W-13 Thru W-22 Tensar Retaining Wall Standard Details

W.P.I. 5117676

GENERAL NOTES

A. SPECIFICATIONS

1. CONSTRUCTION:
   a) Florida Department Of Transportation Standard Specifications For Road And Bridge Construction, (1991 Edition) And Supplements Thereto.
2. DESIGN:
   a) AASHTO Standard Specifications For Highway Bridges, (1992 Edition), And Applicable Interims Through 1993.
   b) Florida Department Of Transportation Structures Design Guidelines, 1987, Through 1994 Revision.
   c) "INSITU Soil Improvement Techniques" AASHTO – AGC – ARTBA Task Force 27 Ground Modifications Techniques Janurary 1990.

B. DESIGN LOADINGS

1. DEAD LOADS:
   a) Unit Weight Of Reinforced Concrete: 150 PCF
   b) Future Wearing Surface: 15 PSF
   c) Traffic Railing: 418 PLF
   d) Pedestrian Railing: 200 PLF
   e) Stay In Place Forms: Design Includes An Allowance For 20 PSF Over The Projected Plan Area For The Unit Weight Of Metal Forms And Concrete Required To Fill The Form Flutes. Stay In Place Forms Shall Not Be Used For Cantilever Portions Of The Deck Slab.
2. LIVE LOADS:
   HS 20–44 With Impact (Prestressed Beams Designed For An Additional 5% Live Load). See Also Sheet B–3 For Crane Loads.
3. WIND LOADS:
   a) Basic Wind: In Accordance With AASHTO Specifications.
4. DESIGN TEMPERATURES:

SUPERSTRUCTURE:	MEAN	RISE FROM MEAN	FALL FROM MEAN	RANGE
–Concrete Beams	70°F	+25°F	–25°F	50°F
–Composite Steel Beams	70°F	+35°F	–35°F	70°F

   –Concrete Thermal Coefficient = 0.000005 Per Degree F
   (Based On Florida Limerock Aggregate)
   –Steel Thermal Coefficient = 0.0000065 Per Degree F
5. EARTHQUAKE:
   a) Seismic Performance Category B
      Acceleration Coefficient = 0.025
      Little Wekiva River – Per AASHTO 4.5 Of Division 1–A
      Lake Bosse – Category B
6. DISTRIBUTION VALUES:

	INTERIOR BEAMS	EXTERIOR BEAMS
a) Live Load (As Function Of Beam Spacing, S)	S/5.5	S/5.5
b) Traffic Barrier (PLF)	Per Structures Design Guidelines 10.12	

C. DESIGN METHOD

a) Strength Design Method (Load Factor Design) Except That The Design Of Prestressed Concrete Piles, Spread Footing And The Loads On Piles Have Been Computed For Service Loads. Prestressed Beams Are Service Load Design And Checked For Ultimate Capacity.

D. FOUNDATION

a) All Piles And Pile Driving Operations Shall Be In Accordance With F.D.O.T. Supplemental Specification Section 455.
b) Pile Loads:

Location	Pile Type	Adjusted Design Capacity	Design Service Load
Little Wekiva River	18"Sq. Prestressed Conc.	87 Tons	92 Tons
Lake Bosse	20"ø Steel Pipe (Conc. Filled)	115 Tons	130 Tons

c) Pile Design At Little Wekiva River Includes 5 Ton Per Pile Allowance Due To Negative Skin Friction.
   Pile Design At Lake Bosse Includes 15 Ton Per Pile Allowance Due To Negative Skin Friction.
d) Where MSE Walls Are To Be Used, End Bent Piles Shall Be Driven Prior To Placing The MSE Embankment.
e) The Portion Of The Piles Within The MSE Embankment (Above Existing Grade) Shall Be Wrapped With Two Independent Sheets Of 6 Mil Polyethylene In Accordance With F.D.O.T. Supplemental Specification 459.

E. DECK SEQUENCE POURING AND SCREEDING

a) Decks Shall Be Placed As Follows: After Pouring The First Unit Succeeding Pours Shall Begin At The End Away From And Proceed Toward The Previously Placed Unit.
b) The Riding Surface Of Bridge Deck Shall Be Screeded To Finish Grade With No Allowance For Permanent Camber.

F. END BENTS

a) All Exposed Edges Shall Be Chamfered 3/4" Unless Otherwise Noted.
b) Top Of Traffic Railing Shall Be Constructed Parallel To Grade.

G. MATERIALS

1. CONCRETE:
   Concrete Shall Be In Accordance With F.D.O.T. Supplemental Specification Section 346.
   a)

CLASS	Maximum Design Compressive Stress (psi)	Minimum 28–Day Compressive Strength (psi)	Design Unit Weight Incl. Reinforcing (pcf)	Modulus Of Elasticity (ksi)	Location Of Concrete In Structure
II (BRIDGE DECK)	fc = 1,800	f'c = 4,500	150	4,500	C.I.P. Conc. For Superstructure In Slightly Aggressive Environment Only
III	fc = 2000	f'c = 5000	150	3,700	MSE Walls
IV	fc = 2,200	f'c = 5,500	150	3,900	All C.I.P. Concrete In Extremely Aggressive Environment (Substructure)
IV	fc = 2,200	f'c = 5,500	150	3,900	Prestressed Conc. Beams @ Little Wekiva River
V	fc = 2,600	f'c = 6,500	150	4,200	Prestressed Conc. Beams @ Lake Bosse
V (SPECIAL)	fc = 2,400	f'c = 6,000	150	4,000	Prestressed Conc. Piles

   NOTE: Class V (Special) Concrete Shall Conform To All The Requirements Of Class V Concrete Except For The Minimum 28–Day Compressive Strength.
   b) Provide 3/4" Chamfers On All Exposed Edges Except As Otherwise Noted.
   c) Construction Joints Will Be Permitted Only At Location Indicated On Plans. Additional Construction Joints Or Alterations To Those Shown Shall Require Approval Of The Engineer.
2. REINFORCING STEEL:
   a) Prestressing Strands Used For Precast Beams Shall Be 270KSI, Low Relaxation, 1/2" Diameter Strands With With Nominal Steel Area Equal To 0.153 Sq. In. Prestressing Strands Used For Precast Piles Shall Be In Accordance With Index 600 (See Sheet A–4 & A–5).
   b) Reinforcement Shall Be ASTM A615, Grade 60, (f_s= 24,000 psi).
   c) All Dimensions Pertaining To The Location Of Reinforcing Are To The Centerline Of Bar Except Where The Clear Dimension Is Shown To Face Of Concrete.
   d) Reinforcement Detail Dimensions Are Out To Out Of Bars.
   e) E.F. Denotes "Each Face",
      N.F. Denotes "Near Face",
      F.F. Denotes "Far Face".
      F.F.B.W. Denotes "Front Face Of Back Wall".
   f) Concrete Cover For Reinforcement Shall Be:
      –Superstructure (CIP): 2"
      –Substructure (CIP): 4"
      –Precast, Pretensioned Piling: 3"
      –Concrete Cast Against Earth: 4 1/2"
   g) Concrete Covers Shown In The Plans Do Not Include Placement And Fabrication Tolerances Unless Shown As "Minimum Cover". See FDOT Standard Specifications For Allowable Tolerances.
3. STRUCTURAL STEEL:
   a) All Structural Steel Shall Be Made From ASTM A–709, Grade 50W (Weathering Steel).
   b) All Connection Bolts, Nuts And Washers Are To Be 7/8" Diameter, High Strength Bolts, ASTM A–325 (Type 3).
   c) All Anchor Bolts Shall Be In Accordance With AASHTO M 314 Grade 55. The Anchor Bolts, Nuts And Washers Shall Be Hot Dip Galvanized In Accordance With ASTM A–123 (For Plate) Or A–153 (For Hardware) Specifications.
   d) Contractor Is Responsable For Providing Proper Cross Bracing, Top Flange Bracing, etc. During All Phases Of Construction. Include The Method Of Bracing In The Shop Drawing Submittal.
4. PIPE PILES:
   a) See Foundation Layout Sheet For Details.

H. WELDING

a) Weld Details And The Welding Operation Shall Be In Accordance With The Current Edition Of The ANSI–AASHTO–AWS Bridge Welding Code. Welds Requiring Nondestructive Testing Shall Be Radiographically Inspected, Except Where The Geometry Of The Region Of The Weld Will Not Permit Satisfactory Information To Be Secured For Verification Of The Weld Quality. When Such Geometrical Conditions Exist, Other Inspection Procedures Or Combination Of Procedures Such As Ultrasonic Inspection, Dye Penetrant Inspection, And/Or Magnetic Particle Inspection May Be Required.

J. PREVENTION OF RUST STAINS FROM WEATHERING STEEL

a) Pier Cap No. 3 And 4 Shall Be Completely Wrapped With A Minimum Of Two Layers Of 6 Mil. Polyethylene Sheeting In Order To Provide A Watertight Seal. Joints In Sheeting Must Be Watertight. The Sheeting Shall Remain In Place, Without Tears Or Other Damage, Until All Construction Is Complete And Accepted. Only Then Shall The Contractor Remove The Sheeting.

K. CONSTRUCTION SEQUENCE

a) Phase Construction Is Required At Lake Bosse Bridge Only. See Construction Sequence Sheet For Details.

L. REMOVAL OF EXISTING BRIDGE

a) See Oranole Road Bridge Existing Bridge Plans.

M. ENVIRONMENT

1. Location – Inland
2. Description
   a) Superstructures: Slightly Aggressive For All Bridges.
   b) Substructure: Extremely Aggressive For All Bridges

N. JACKING LOAD NOTES

a) Jacking Loads Include Dead Load And Live Load Plus Impact. Jacking Equipment Is Not A Part Of This Contract And Does Not Need To Be Provided By The Bridge Contractor.
b) Jacks Shall Be Equipped With Locking Rings Which Will Prevent Movement In The Event Hydraulic Pressure Is Lost. Jacks Shall Be Locked Off Prior To Removal Of Any Bearing Assemblies.
c) Jacking Shall Continue Until Pads Can Be Freed, But the Amount Of Lift Shall Not Exceed 1/4 Inches.
d) Properly Sized Shim Plates Shall Be Provided To Limit The Ultimate Load Bearing Stressed On Concrete In Accordance With Article 8.16.7 Of AASHTO Standard Specifications.

O. DATUM

a) All Elevations Refer To NGVD 1929 Datum.

P. UTILITIES

a) Existing Utilities Shown At Approximate Locations. Exact Locations Shall Be Determined By The Contractor Prior To The Start Of Construction.
b) Contractor Shall Reference Utility Adjustment Plans In Roadway Set For Utility Relocation. Utility Relocations In Bridge Vicinity Not Shown In Bridge Plans.
c) Proposed Storm Sewer Utilities On Bridge:

Location:	Utility:
Little Wekiva River – Under Right Overhang	36"øD.I.P.
Lake Bosse – Under Left Overhang	30"øD.I.P.

   See Miscellaneous Detail Sheets.

Q. BRIDGE FLOOR GROOVING

All Roadway Riding Surfaces Of The Bridge Deck Slabs Shall Be Grooved In Accordance With The Requirements Of Class 4 Floor Finish In FDOT General Specification (Section 400–15.2.5)

R. STAY–IN–PLACE FORMS

All Embedded Items And Accessories Required For Stay–In–Place Forms Shall Be Included In The Shop Drawing Submittal.

S. SURFACE FINISH

The Top And Both Faces Of Traffic Railing (Barrier) And End Post, The Top And Both Faces Of The Sidewalk Parapet, And The Exterior Vertical Face Of The Bridge Deck Shall Recieve A "Class V Applied Finish Coating" In Accordance With The Specifications. See The "Surface Finish Details" On This Sheet.

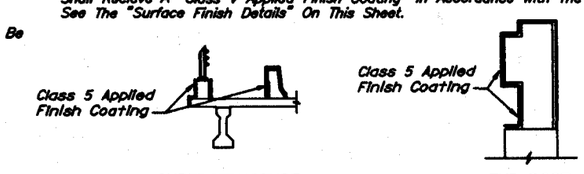

SUPERSTRUCTURE END POST

SURFACE FINISH DETAILS

BID ITEMS NOTES

1) Payment For Incidental Items Not Specifically Covered In The Individual Bid Items Shall Be Included In The Contract Prices For The Bid Items.
2) The Following Numbers Of Standard And Non–Standard Composite Neoprene Bearing Pads (Pay Item No. 400–147) Are Required:
   Little Wekiva River – 22 Type IV Composite Pads For A Total Volume Of 3.7 C.F.
   Lake Bosse – 110 Type V Composite Pads For A Total Volume Of 30.6 C.F.
   22 Non–Standard Composite Pads For A Total Volume Of 13.8 C.F.
   Neoporene Bearing Pads Shall Be Furnished And Installed By The Contractor.
3) Bid Item No. 400–7 Bridge Floor Grooving Shall Not Include Approach Slab Grooving. (See Roadway Plans) The Area Of Bridge Floor Grooving Shall Be Determined By Measurement Of Area Bounded By The Gutter Lines And The Beginning And End Of The Bridge Deck Slab.
4) The Total Plan Area Of Approach Slabs Required:
   Little Wekiva River – ____
   Lake Bosse – ____
   See Miscellaneous Bridge Details Sheet For Details. Additional Details Of Approach Slabs And Payment Are Included In The Roadway Plans.
5) The Removal Of The Existing Oranole Road Bridge Over The Little Wekiva River Shall Be Paid For Under Pay Item 110–3 Removal Of Existing Structures.

REVISIONS

Date	By	Description	Date	By	Description

	Names	Dates
Drawn by	JLA	9/94
Checked by	MKA	9/94
Designed by	MKA	9/94
Checked by	PM	9/94
Approved by	Peeter Mannik, P.E.	

ENGINEER OF RECORD: DYER, RIDDLE, MILLS AND PRECOURT, INC. 1505 EAST COLONIAL DRIVE ORLANDO, FLORIDA 32803

LOGO: DYER, RIDDLE, MILLS AND PRECOURT, INC. ENGINEERS - SURVEYORS 1505 EAST COLONIAL DRIVE ORLANDO, FLORIDA 32803

SEAL:

FLORIDA DEPARTMENT OF TRANSPORTATION
STRUCTURES DESIGN OFFICE

ROAD NO.	COUNTY	PROJECT NO.
SR414	SEMINOLE	77002–3503

SHEET TITLE: GENERAL NOTES

Drawing No.

PROJECT NAME: MAITLAND BOULEVARD

Index No.

FED. ROAD DIV. NO.	STATE	PROJECT NO.	FISCAL YEAR	SHEET NO.
3	FLA.		98	A-3

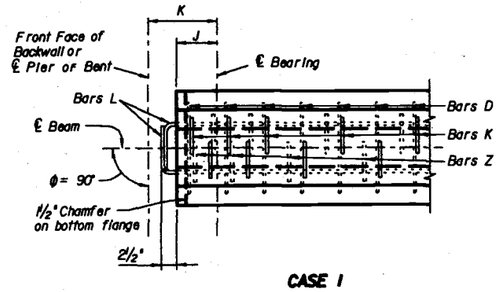

CASE 1

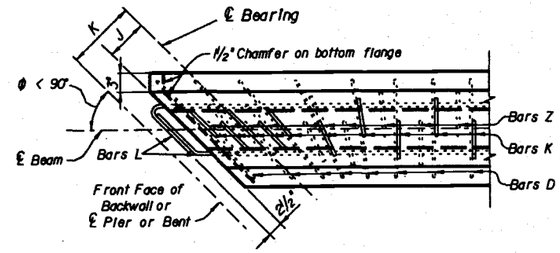

CASE 2
(See Note)

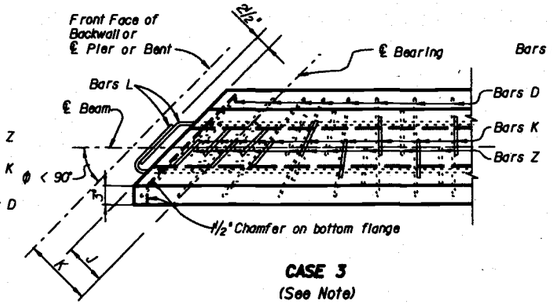

CASE 3
(See Note)

PLAN ENDS OF BEAMS

Note: For both Plan Views Case 2 and Case 3, the first Bar Z and the first two Bars K shall be placed parallel to the skewed end of the Beam. The remainder of the Bars Z & K shall be placed so as to transition from an axis parallel to the skewed end to an axis perpendicular to the centerline of the beam. Bars D in the bottom flange shall be rotated along with Bars Z & K. Bar spacing may be adjusted to miss welded studs for bearing plates. See also "End Elevations of Beams", this sheet.

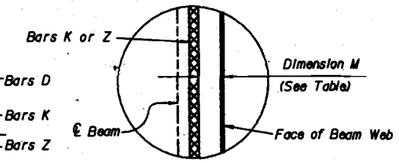

SECTION THRU BEAM WEB
(Showing Cover on Stirrups)

TABLE OF DIMENSIONS M	
BEAM TYPE	DIMENSION M
II	2"
III	2½"
IV	3"

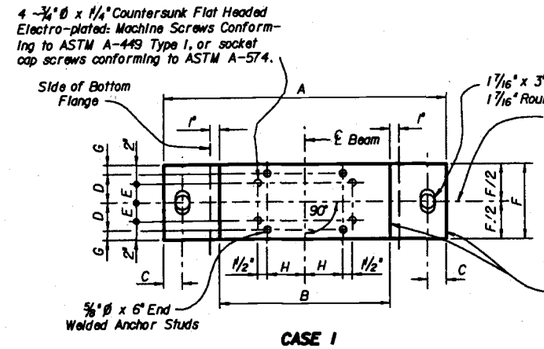

CASE 1

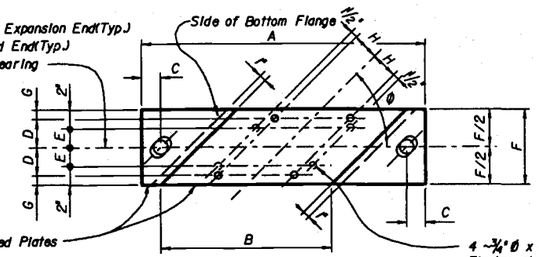

CASE 2

BEARING PLATE DETAILS

NOTE: Bearing Plates required on Beams only as scheduled in the Table of Beam Variables.

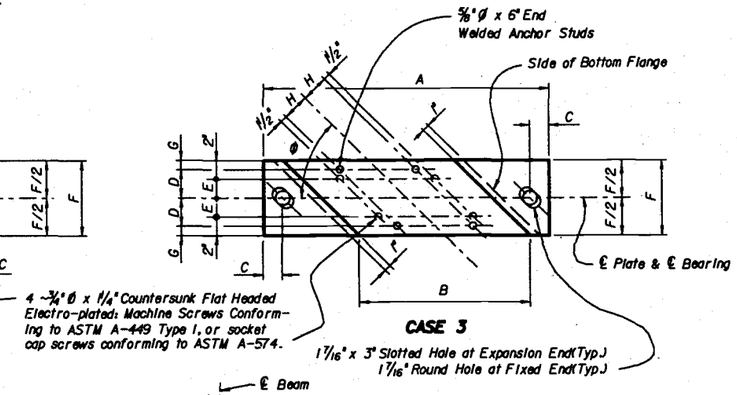

CASE 3

TABLE OF BEARING PLATE DIMENSIONS								
BEAM TYPE	DIMENSIONS (INCHES)							
	A	B	C	D	E	F	G	H
II	B+2C+(6/SINφ)	16/SIN φ	2+0.78KCOSφ	3	2½	9	1½	3
III		20/SIN φ			2	8	1	5
IV		24/SIN φ			3	10	2	7

NOTE: All bearing plate dimensions are measured along the bottom of the beam.

NOTE: Insert shall be 1"Ø, zinc-electroplated, ferrule wing nut, UNC threads, 1/0 minimum gage wire, not more than 4" in depth and shall have a minimum ultimate tensile strength of 11,400 lbs. in 4,000 p.s.i. concrete.

NOTE: If inserts are needed on both sides (faces) of beam webs an assembly as long as the thickness of the beam web, consisting of two (2) Ferrule Inserts attached by two (2) or more struts may be utilized. The connecting struts shall have a minimum ultimate tensile strength of 22,800 lbs.

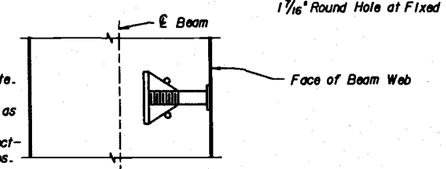

SECTION THRU BEAM WEB AT INSERT FOR DIAPHRAGM REINFORCING
(When Intermediate Diaphragms are Required)

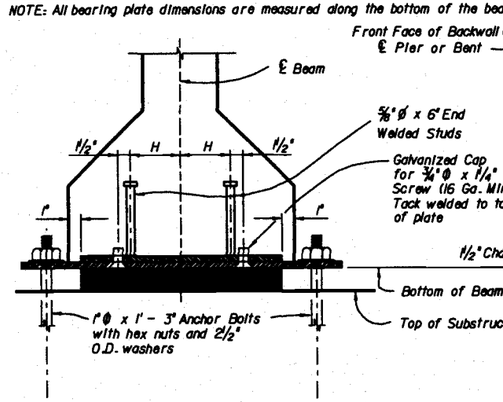

END ELEVATION-SECTION OF BEARING ASSEMBLY
(Perpendicular to ℄ Beam)

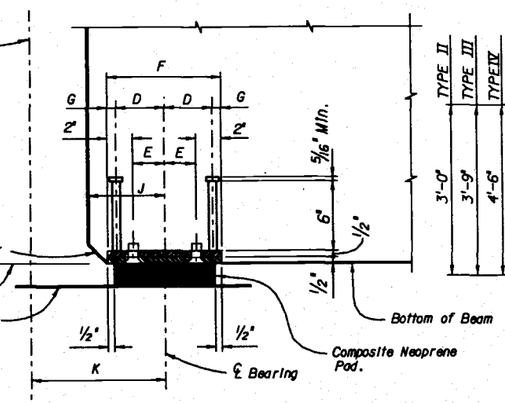

SIDE ELEVATION-SECTION OF BEARING ASSEMBLY
(Perpendicular To ℄ Bearing)

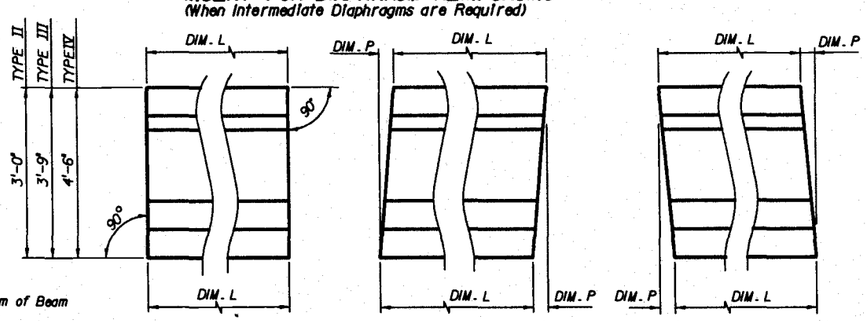

CONDITION 1
(P = 0'-0")

CONDITION 2

CONDITION 3

END ELEVATIONS OF BEAMS
(Showing Vertical Bevel of Beam End)

BEAM NOTES

MORTAR LEAKAGE: Any mortar leakage that occurs and stains resulting from leakage shall be removed so that beams have a uniform appearance.

STRANDS: At the option of the Contractor, other types, sizes and/or configurations of strands may be used in lieu of the stranding shown on these sheets. Calculations shall be submitted showing the substitution meets the following requirements:

1. The strands meet all the requirements of ASTM-A416 for the grade of strands proposed.
2. The net compressive stress in the concrete due to prestressing acting alone, after all losses, is at least as large as that provided by the stranding shown on these sheets.
3. The ultimate strength of the structure with the proposed stranding is at least equal to the ultimate strength of the original design.
4. The proposed stranding complies in all respects with the Department's Structures Design Guidelines.

FINISH: The top surface of the beam shall be rough floated and then scrubbed transversely with a coarse wire brush to remove all laitance and to produce a roughened surface for bonding. All beams shall receive a Class 3 surface finish.

SUBMITTALS: The Specifications stipulate the conditions for which Shop Drawings are not required. If each and every condition can not be met, then a formal Shop Drawing submittal is required. Supplemental reinforcing provided by the Contractor to facilitate fabrication of prestressed beams do not require Shop Drawings.

STRAND DETENSIONING: Strand detensioning shall be based upon the following priority, from first to last:

1. Top dormant strands (Bars N)
2. Fully bonded strands
3. Partially debonded (shielded) strands

FORMS AND PALLETS: All beams shall be cast on concrete based pallets and in metal forms.

HANDLING: In the handling of beams, they must be maintained in an upright position at all times and must be picked up from points located a maximum distance of 3 ft. from the ends of the beam.

STORAGE AND TRANSPORTATION: Beams shall be stored on adequate dunnage and supported during transit within 18" from ends of beam.

STRAND EXTENSION: All strands shall extend 2½" beyond ends of beams.

CONCRETE: Refer to Table of Beam Variables on the individual beam sheets for the class of concrete, 28-day strength (f'c) and cylinder strength at transfer of the tensioning load (f'ci).

REINFORCING STEEL: All reinforcing steel shall be Grade 60.

BEARING PADS: The cost of installing bearing pads shall be included in the contract unit price of prestressed beams. The composite neoprene pads may or may not be furnished to the contractor by FDOT. See the General Notes for the bridge, or the Bid Item Notes, for additional information regarding who the pads provider will be.

MISCELLANEOUS: Bearing plates, anchor bolts, nuts and washers shall be hot dip galvanized in accordance with requirements of A.S.T.M. Specification A123 or A153. Bearing plates shall conform to A.S.T.M. Specification A709, Grade 36. Anchor bolts shall conform to A709, Grade 36 or A307. The cost of bearing plates, anchor bolts, nuts, washers, premoulded expansion material at bearings and inserts for diaphragm tie bars shall be included in the contract unit prices for prestressed beams.

NOTES: Work this sheet with individual beam sheets, Type II, III and IV only.

See "TABLE OF BEAM VARIABLES" on individual beam sheets for angle "φ"s and dimensions "J", "K", "L" and "P".

For beams with vertically bevelled ends, such as conditions 2 & 3, the first Bar K shall be placed parallel to the end bevel. Adjacent Bars Z and K shall be placed so as to transition from an axis parallel to the end bevel to a vertical axis. The spacing of Bars K and Z shown shall apply along the top flange of the beam and the spacing along the bottom of the beam shall be adjusted by not more than ½ inch (±) until the vertical position is attained.

REVISIONS					
Date	By	Description	Date	By	Description
			92R		

	Names	Dates
Drawn by	WEH	1-89
Checked by	DCP	1-89
Designed by	DCP	1-89
Checked by	WEH	1-89
Approved by	REN	

ENGINEER OF RECORD:
STRUCTURES DESIGN OFFICE
CENTRAL OFFICE
605 Suwannee Street, MS 33
Tallahassee, Florida 32399-0450

LOGO:
DYER, RIDDLE, MILLS AND PRECOURT, INC.
ENGINEERS - SURVEYORS
1505 EAST COLONIAL DRIVE
ORLANDO, FLORIDA 32803

SEAL:

FLORIDA DEPARTMENT OF TRANSPORTATION
STRUCTURES DESIGN OFFICE

ROAD NO.	COUNTY	PROJECT NO.
SR 414	SEMINOLE	77002-3503

SHEET TITLE:
TYPICAL NOTES AND DETAILS FOR AASHTO TYPE II, III AND IV PRESTRESSED BEAMS

PROJECT NAME:
MAITLAND BOULEVARD

Drawing No. 1 of 1

Index No. 100

MAITDD_.DGN

FED. ROAD DIV. NO.	STATE	PROJECT NO.	FISCAL YEAR	SHEET NO.
3	FLA.		98	A-4

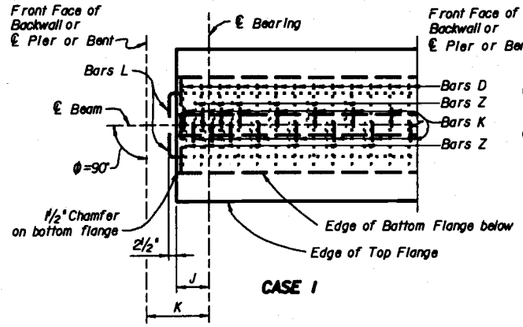

CASE 1

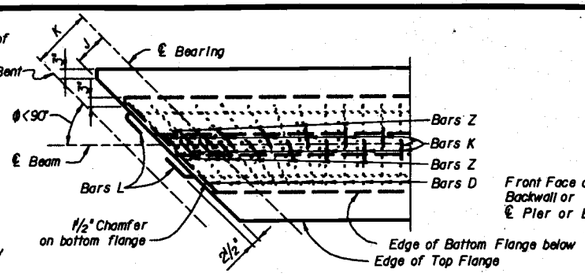

CASE 2
(See Note)

PLAN ENDS OF BEAMS
(Bars M in top flange omitted for clarity)

Note: For both Plan Views Case 2 and Case 3, the first Bar Z and the first two Bars K shall be placed parallel to the skewed end of the Beam. The remainder of the Bars Z & K shall be placed so as to transition from an axis parallel to the skewed end to an axis perpendicular to the centerline of the beam. Bars D in the bottom flange shall be rotated along with Bars Z & K. Bar spacing may be adjusted to miss welded studs for bearing plates. See also "End Elevations of Beams", this sheet.

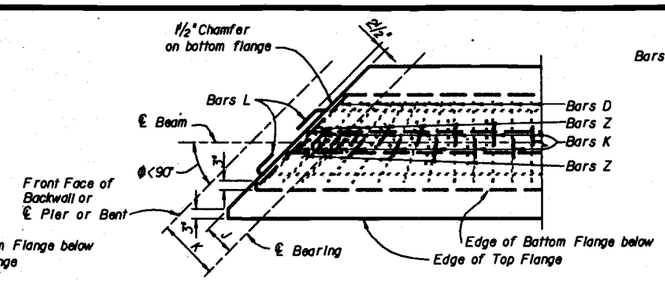

CASE 3
(See Note)

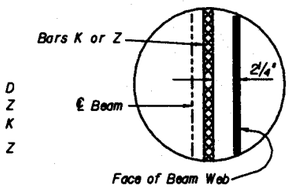

SECTION THRU BEAM WEB
(Showing Cover on Stirrups)

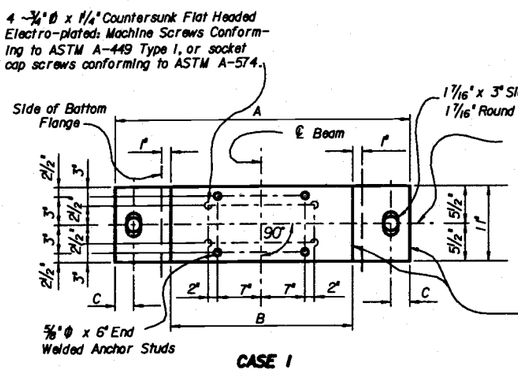

CASE 1

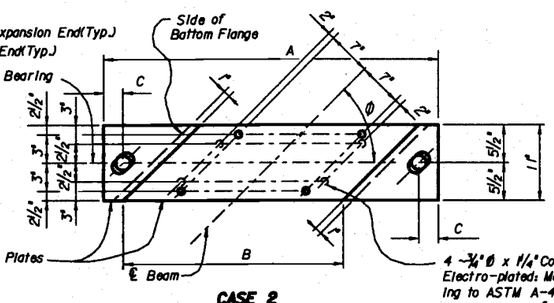

CASE 2

BEARING PLATE DETAILS
NOTE: Bearing Plates required on Beams only as scheduled in the Table of Beam Variables.

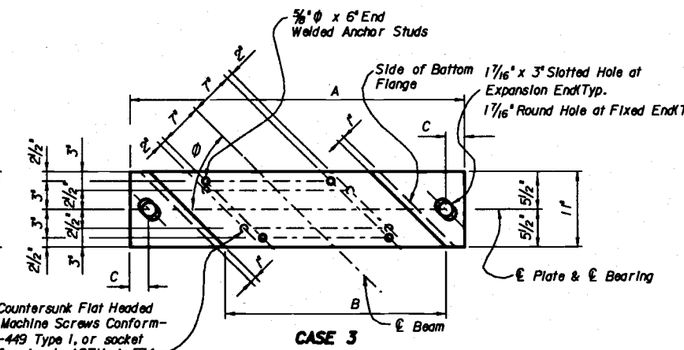

CASE 3

TABLE OF BEARING PLATE DIMENSIONS			
BEAM TYPE	DIMENSIONS (INCHES)		
	A	B	C
FBT54 FBT63 FBT72	$B+2C+\left(\frac{6}{\sin\phi}\right)$	$26/\sin\phi$	$2+0.78K\cos\phi)$

NOTE: All bearing plate dimensions are measured along the bottom of the beam.

NOTE: Insert shall be 1"Φ, zinc-electroplated, ferrule wing nut, UNC threads, 1/0 minimum gage wire, not more than 4" in depth and shall have a minimum ultimate tensile strength of 11,400 lbs. in 4,000 p.s.i. concrete.

NOTE: If inserts are needed on both sides (faces) of beam webs an assembly as long as the thickness of the beam web, consisting of two (2) ferrule inserts attached by two (2) or more struts may be utilized. The connecting struts shall have a minimum ultimate tensile strength of 22,800 lbs.

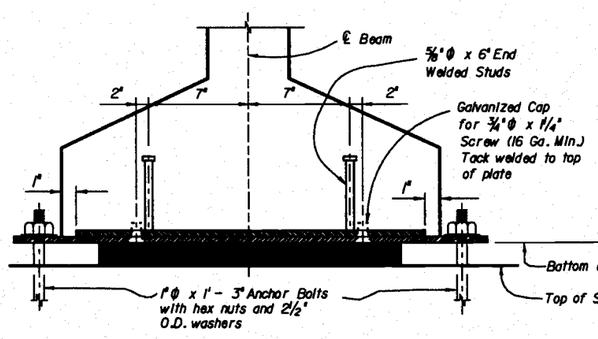

END ELEVATION-SECTION OF BEARING ASSEMBLY
(Perpendicular to ℄ Beam)

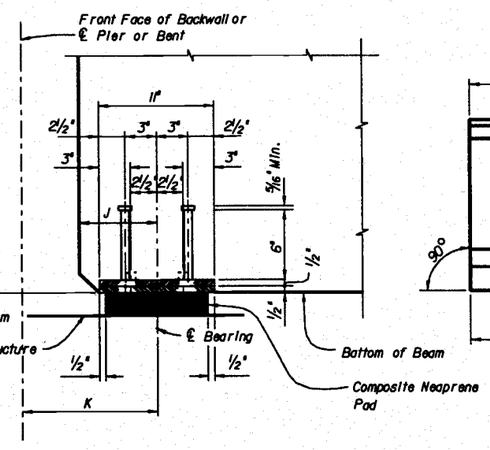

SIDE ELEVATION-SECTION OF BEARING ASSEMBLY
(Perpendicular To ℄ Bearing)

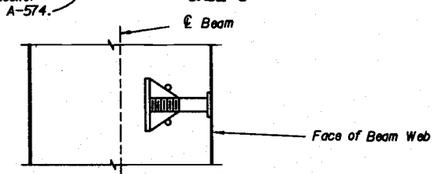

SECTION THRU BEAM WEB AT INSERT FOR DIAPHRAGM REINFORCING
(When Intermediate Diaphragms are Required)

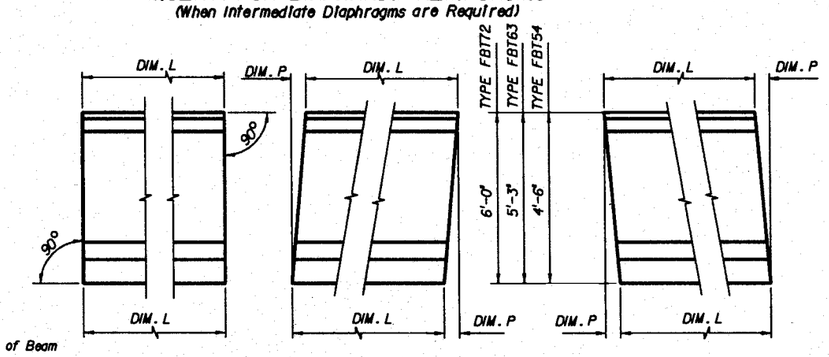

CONDITION 1 (P = 0'-0")

CONDITION 2

CONDITION 3

END ELEVATIONS OF BEAMS
(Showing Vertical Bevel of Beam End)

BEAM NOTES

MORTAR LEAKAGE: Any mortar leakage that occurs and stains resulting from leakage shall be removed so that beams have a uniform appearance.

STRANDS: At the option of the Contractor, other types, sizes and/or configurations of strands may be used in lieu of the stranding shown on these sheets. Calculations shall be submitted showing the substitution meets the following requirements:

1. The strands meet all the requirements of ASTM-A416 for the grade
2. The net compressive stress in the concrete due to prestressing acting alone, after all losses, is at least as large as that provided by the stranding shown on these sheets.
3. The ultimate strength of the structure with the proposed stranding is at least equal to the ultimate strength of the original design.
4. The proposed stranding complies in all respects with the Department's Structures Design Guidelines.

FINISH: The top surface of the beam shall be rough floated and then scrubbed transversely with a coarse wire brush to remove all laitance and to produce a roughened surface for bonding. All beams shall receive a Class 3 surface finish.

SUBMITTALS: The Specifications stipulate the conditions for which Shop Drawings are not required. If each and every condition can not be met, then a formal Shop Drawing submittal is required. Supplemental reinforcing provided by the Contractor to facilitate fabrication of prestressed beams do not require Shop Drawings

STRAND DETENSIONING: Strand detensioning shall be based upon the following priority, from first to last:

1. Top dormant strands (Bars N)
2. Fully bonded strands
3. Partially debonded (shielded) strands

FORMS AND PALLETS: All beams shall be cast on concrete based pallets and in metal forms.

HANDLING: In the handling of beams, they must be maintained in an upright position at all times and must be picked up from points located a maximum distance of 3 ft. from the ends of the beam.

STORAGE AND TRANSPORTATION: Beams shall be stored on adequate dunnage and supported during transit within 18" from ends of beam.

STRAND EXTENSION: All strands shall extend 2 1/2" beyond ends of beams.

CONCRETE: Refer to Table of Beam Variables on the individual beam sheets for the class of concrete, 28-day strength (f'c) and cylinder strength at transfer of the tensioning load (f'ci).

REINFORCING STEEL: All reinforcing steel shall be Grade 60.

BEARING PADS: The cost of installing bearing pads shall be included in the contract unit price of prestressed beams. The composite neoprene pads may or may not be furnished to the contractor by FDOT. See the General Notes for the bridge, or the Bid Item Notes, for additional information regarding who the pads provider will be.

MISCELLANEOUS: Bearing plates, anchor bolts, nuts and washers shall be hot dip galvanized in accordance with requirements of A.S.T.M. Specification A123 or A153. Bearing plates shall conform to A.S.T.M. Specification A709, Grade 36. Anchor bolts shall conform to A.S.T.M. A709, Grade 36 or to A307. The cost of bearing plates, anchor bolts, nuts, washers, premoulded expansion material at bearings and inserts for diaphragm tie bars shall be included in the contract unit prices for prestressed beams.

NOTES: Work this sheet with individual beam sheets, Bulb-T 54, 63 & 72.

See "TABLE OF BEAM VARIABLES" on individual beam sheets for angle "Φ"s and dimensions "J", "K", "L" and "P".

For beams with vertically bevelled ends, such as conditions 2 & 3, the first Bar K shall be placed parallel to the end bevel. Adjacent Bars Z and K shall be placed so as to transition from an axis parallel to the end bevel to a vertical axis. The spacing of Bars K and Z shown shall apply along the top flange of the beam and the spacing along the bottom of the beam shall be adjusted by not more than 1/2 inch (±) until the vertical position is attained.

REVISIONS					
Date	By	Description	Date	By	Description
			92R		

	Names	Dates
Drawn by	WEH	1-89
Checked by	DCP	1-89
Designed by	DCP	1-89
Checked by	WEH	1-89
Approved by	REN	

ENGINEER OF RECORD:
STRUCTURES DESIGN OFFICE
CENTRAL OFFICE
605 Suwannee Street, MS 33
Tallahassee, Florida 32399-0450

LOGO:
DYER, RIDDLE, MILLS AND PRECOURT, INC.
ENGINEERS - SURVEYORS
1505 EAST COLONIAL DRIVE
ORLANDO, FLORIDA 32803

SEAL:

FLORIDA DEPARTMENT OF TRANSPORTATION
STRUCTURES DESIGN OFFICE

ROAD NO.	COUNTY	PROJECT NO.
SR 414	SEMINOLE	77002-3503

SHEET TITLE: TYPICAL NOTES AND DETAILS FOR FLORIDA BULB-T 54, 63 & 72 PRESTRESSED BEAMS

PROJECT NAME: MAITLAND BOULEVARD

Drawing No. 1 of 1

Index No. 110

MAITHO . DGN

FED. ROAD DIV. NO.	STATE	PROJECT NO.	FISCAL YEAR	SHEET NO.
3	FLA.		98	A-5

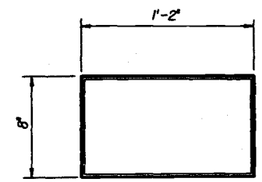

PLAN

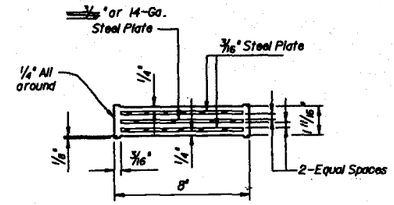

TYPICAL SECTION

COMPOSITE PAD TYPE II

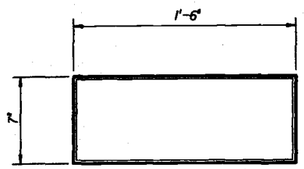

PLAN

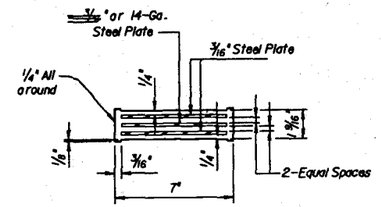

TYPICAL SECTION

COMPOSITE PAD TYPE III

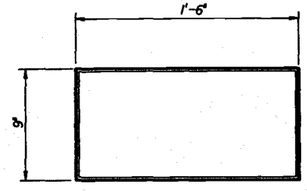

PLAN

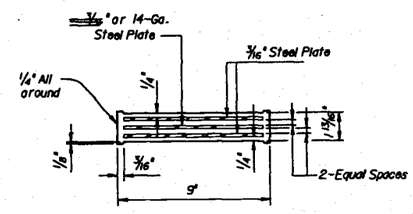

TYPICAL SECTION

COMPOSITE PAD TYPE IV

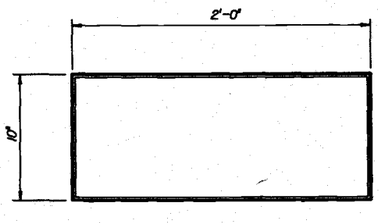

PLAN

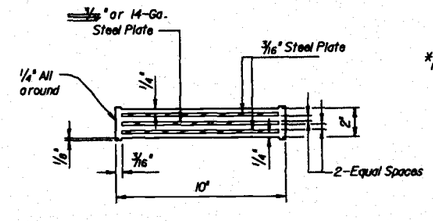

TYPICAL SECTION

COMPOSITE PAD TYPE V

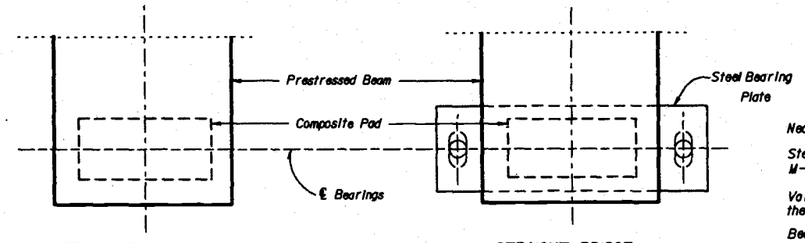

STRAIGHT BRIDGE

STRAIGHT BRIDGE (With Bearing Pl.)

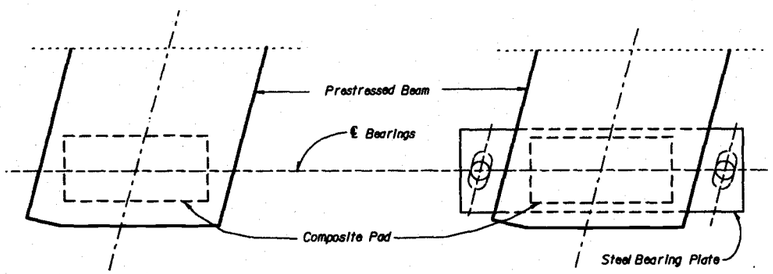

SKEWED BRIDGE

SKEWED BRIDGE (With Bearing Pl.)

PART PLAN

BEARING PAD NOTES

Neoprene in all Bearing Pads shall have a Grade 50 durometer hardness.

Steel Plates in composite pads shall conform to AASHTO Specifications M-251.

Variations in pad dimensions will be allowed provided revised pads will meet the current specifications and are approved by the Engineer.

Bearing seat shall be finished parallel to the bottom of Beam.

For Bearing Plate requirements and details, see Beam Sheets.

NOTE TO DESIGNER: Utilization of the standard composite neoprene bearing pads shown on this sheet shall be limited to applications that do not exceed the following values:

PAD TYPE	MAX. REACTION (DL + LL)	MAX. SHEAR DEFLECTION (Δ's)
II	90 Kips	0.60"
III	115 Kips	0.55"
IV	130 Kips	0.67"
V	192 Kips	0.75"

Prestressed Beam applications shall be as follows:

PAD TYPE	BEAM TYPE
II	Type II AASHTO Shape
III	Type III AASHTO Shape
IV	Type IV AASHTO Shape
V	Type V & VI AASHTO Shapes & Florida Bulb-T Shapes

NOTE: The above Maximum Reaction Limitations apply to Prestressed Concrete Beam applications. These Standard Composite Pads may also be utilized as Bearings for other types of beams such as Structural Steel Beams; however, in this event the Designer shall verify that the Design meets the requirements of the AASHTO Specifications.

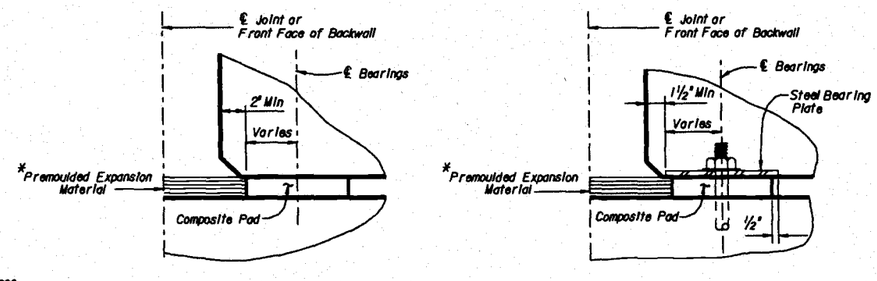

TYPICAL PAD DETAIL

TYPICAL PAD DETAIL (With Bearing Pl.)

PART ELEVATION

* Premoulded Expansion Material is required for Cast-In-Place Beam Extension.

REVISIONS					
Date	By	Description	Date	By	Description
			92		

	Names	Dates
Drawn by	HRF	11-85
Checked by	RDS	1-86
Designed by	BR	2-89
Checked by	TJB	2-89
Approved by	AJG	

ENGINEER OF RECORD: STRUCTURES DESIGN OFFICE, CENTRAL OFFICE, 605 Suwannee Street, MS 33, Tallahassee, Florida 32399-0450

LOGO: DYER, RIDDLE, MILLS AND PRECOURT, INC. ENGINEERS - SURVEYORS, 1505 EAST COLONIAL DRIVE, ORLANDO, FLORIDA 32803

SEAL:

FLORIDA DEPARTMENT OF TRANSPORTATION
STRUCTURES DESIGN OFFICE

ROAD NO.	COUNTY	PROJECT NO.
SR 414	SEMINOLE	77002-3503

SHEET TITLE: COMPOSITE NEOPRENE BEARING PADS

PROJECT NAME: MAITLAND BOULEVARD

Drawing No. 1 of 1

Index No. 200

MAIT200.DGN

FED. ROAD DIV. NO.	STATE	PROJECT NO.	FISCAL YEAR	SHEET NO.
3	FLA.		98	A-6

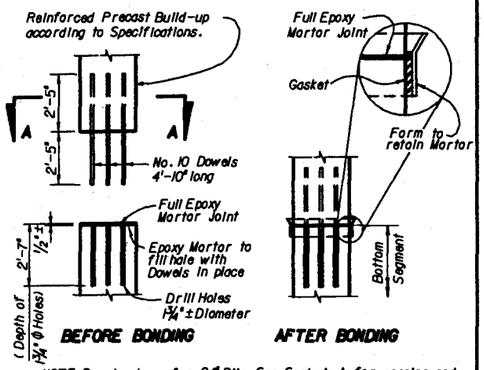

NOTE: Dowels shown for 24" Pile. See Sect. A-A for spacing and number of Dowels for each Pile.

REINFORCED PRECAST SPLICES
(Extensions 2' Min. but less than 5') (Not Drivable)

TABLE OF BONDED SPLICE DATA		
Drivable Splice	Min. Splice Length	No. 10 Dowel Length
YES	10'-0"	7'-5"
NO *	5'-0"	4'-10"

* For Splices less than 5'-0" (not Drivable), use the Reinforced Precast Splice.

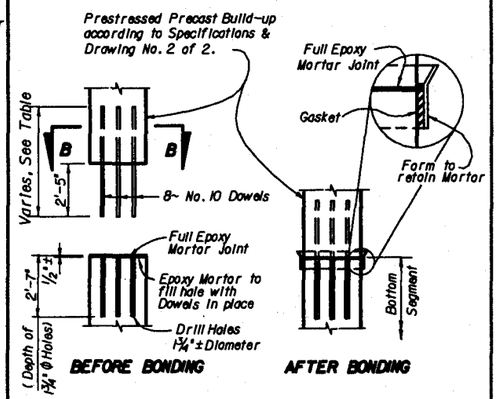

NOTE: Dowels shown for 24" Pile. See SECTION B-B for spacing & Number of Dowels for each Pile.

PRESTRESSED PRECAST SPLICES
(Extensions 5' or longer)

DETAILS FOR REINFORCED PRECAST & PRESTRESSED PRECAST PILE SPLICES

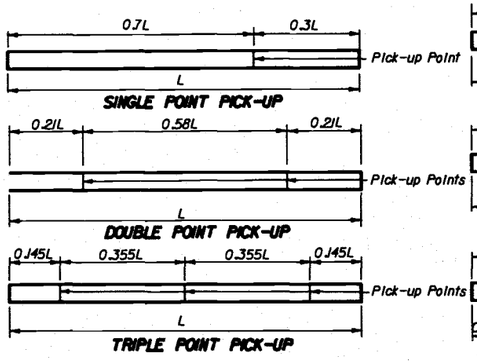

PILE PICK-UP DETAILS

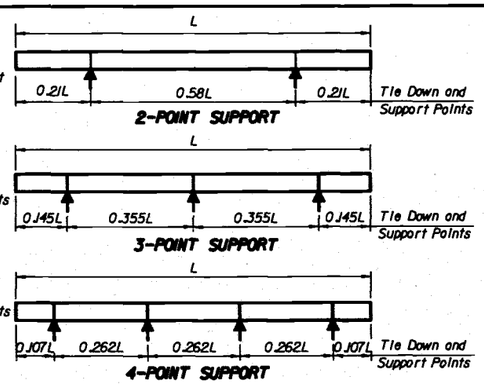

STORAGE AND TRANSPORTATION SUPPORT DETAILS

PILE SIZE	MAX. LENGTH "L" FOR PICK-UP		
	SINGLE POINT	DOUBLE POINT	TRIPLE POINT
12"	50'	70'	L > 70'
14"	55'	75'	L > 75'
18"	60'	90'	L > 90'
20"	65'	95'	L > 95'
24"	70'	100'	L > 100'
30"	90'	125'	L > 125'

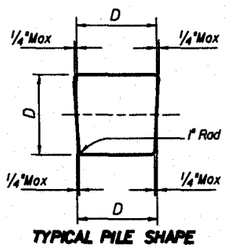

TYPICAL PILE SHAPE FOR MOLD FORMS

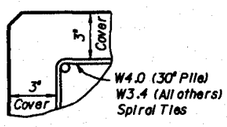

TYPICAL DETAIL SHOWING COVER DIMENSION

* For actual prestressing strand pattern, see Drawing 2 of 2.

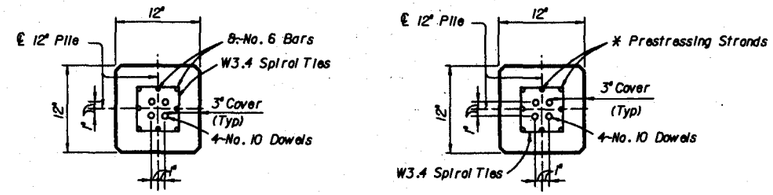

SECTION A-A
(See Reinf. Precast Splice Detail)

SECTION B-B
(See Prstr. Precast Splice Detail)

12" PILE

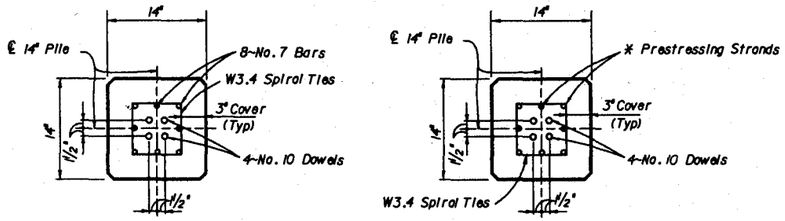

SECTION A-A
(See Reinf. Precast Splice Detail)

SECTION B-B
(See Prstr. Precast Splice Detail)

14" PILE

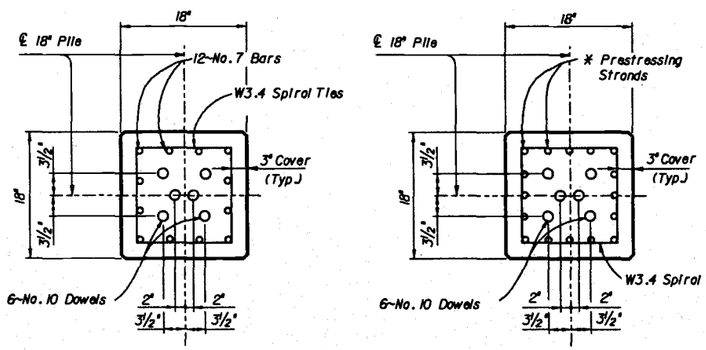

SECTION A-A
(See Reinf. Precast Splice Detail)

SECTION B-B
(See Prstr. Precast Splice Detail)

18" PILE

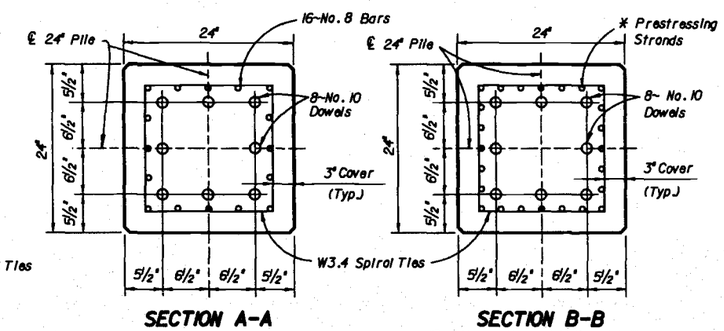

SECTION A-A
(See Reinf. Precast Splice Detail)

SECTION B-B
(See Prstr. Precast Splice Detail)

24" PILE

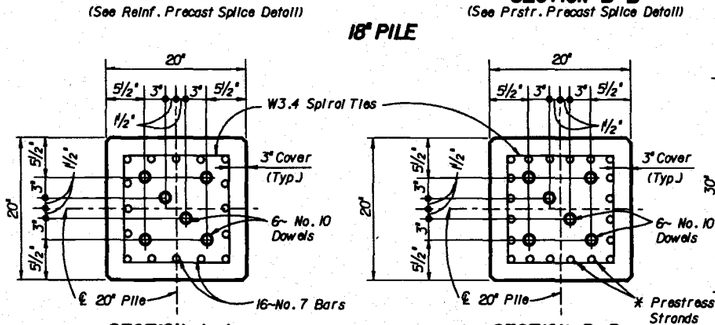

SECTION A-A
(See Reinf. Precast Splice Detail)

SECTION B-B
(See Prstr. Precast Splice Detail)

20" PILE

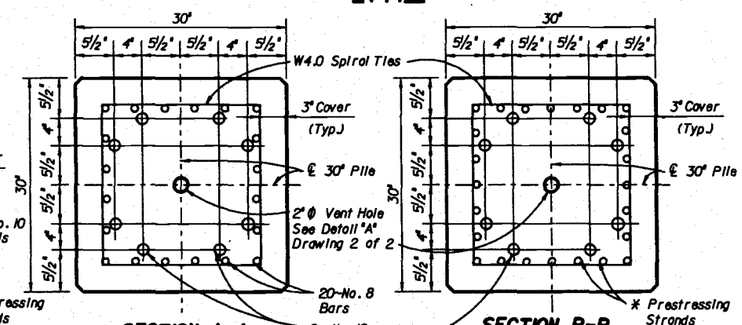

SECTION A-A
(See Reinf. Precast Splice Detail)

SECTION B-B
(See Prstr. Precast Splice Detail)

30" PILE

PILE NOTES

SPIRAL TIES: Each wrap of spirals shall be tied to at least two corner strands or bars. One turn required for spiral splices. Spirals shall be manufactured from cold-drawn steel wire meeting the requirements of ASTM A 82.

PILE CUT OFF: Piles required to be cut off shall be sawcut at the pile cut off elevation shown on the plans with an abrasive saw. Unless otherwise noted on the plans, the cut shall be made to the depth into the pile necessary to cleanly cut through the prestressing strands.

CONCRETE CLASS: Concrete for all piles shall be Class V (Special). Class V (Special) Concrete shall conform to all requirements for Class V Concrete except for the 28-day strength as noted below.

CONCRETE STRENGTH: The cylinder strength shall be 6,000 p.s.i. minimum at 28 days and 4,000 p.s.i. minimum at transfer of the Prestressing Force.

SPLICED PILES: Piles may be spliced in accordance with Section 455-5.12 of the standard specifications. Precast buildups shall be prestressed or reinforced according to pile details for the "head" section of the pile shown on this Standard. Drivable spliced piles may be driven after splice is two days old.

PICK-UP POINTS: Piles shall be marked at the pick-up points to indicate proper points for attaching handling lines.

STORAGE AND TRANSPORTATION: Piles shall be supported on adequate dunnage both in the precasting yard and at the jobsite and shall be supported and tied down during transit in accordance with the following schedule:

Type Pickup Required by Pile Length	Type Storage and Transportation Support Detail
Single or Double	2,3 or 4 Point Support
Triple	3 or 4 Point Support

REINFORCING STEEL: All Reinforcing Steel except spiral ties shall be Grade 60.

STRAND NOMENCLATURE:
S.R. = Stress Relieved Strand
L.R.S. = Low-Relaxation Strand

REVISIONS					
Date	By	Description	Date	By	Description
			92R		

	Names	Dates
Drawn by	TGA	1-91
Checked by	AJG	5-91
Designed by		
Checked by		
Approved by	NICHOLS/AJG	

ENGINEER OF RECORD: STRUCTURES DESIGN OFFICE
CENTRAL OFFICE
605 Suwannee Street, MS 33
Tallahassee, Florida 32399-0450

LOGO: DYER, RIDDLE, MILLS AND PRECOURT, INC.
ENGINEERS - SURVEYORS
1505 EAST COLONIAL DRIVE
ORLANDO, FLORIDA 32803

SEAL:

FLORIDA DEPARTMENT OF TRANSPORTATION
STRUCTURES DESIGN OFFICE

ROAD NO.	COUNTY	PROJECT NO.
SR 414	SEMINOLE	77002-3503

SHEET TITLE: 12", 14", 18", 20", 24", AND 30" PRESTRESSED CONCRETE PILES

PROJECT NAME: MAITLAND BOULEVARD

Drawing No. 1 of 2

Index No. 600

MAITBOD.DGN

FISCAL YEAR BEGIN.	STATE	PROJECT NO.	FISCAL YEAR	SHEET NO.
3	FLA.		98	A-7

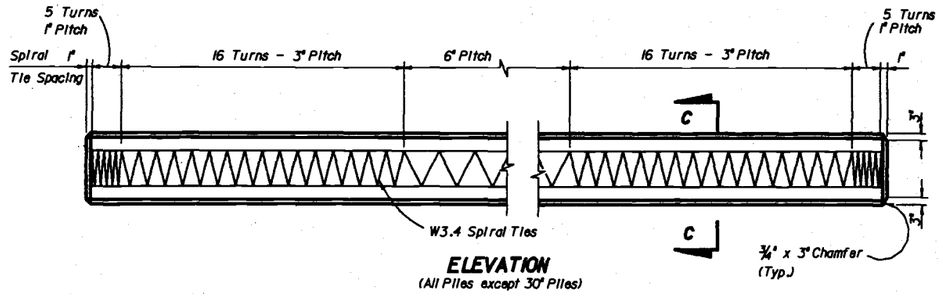

ELEVATION
(All Piles except 30" Piles)

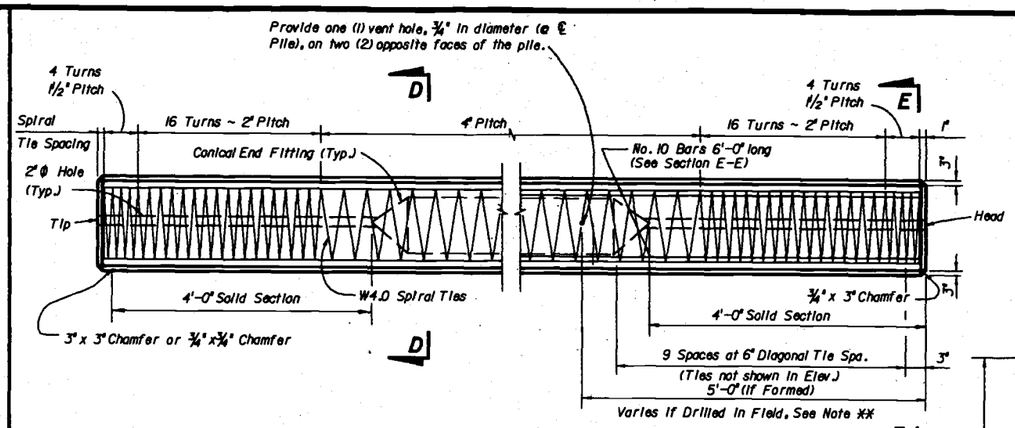

ELEVATION
(30" Piles)

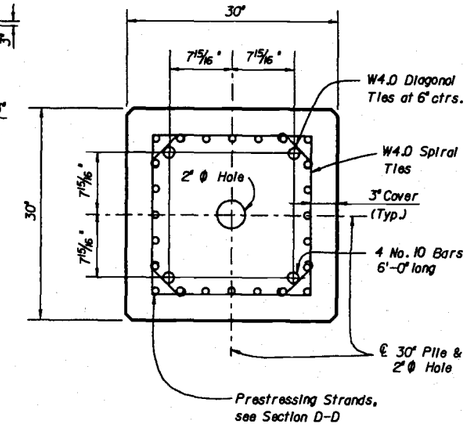

SECTION E-E
30" PILE

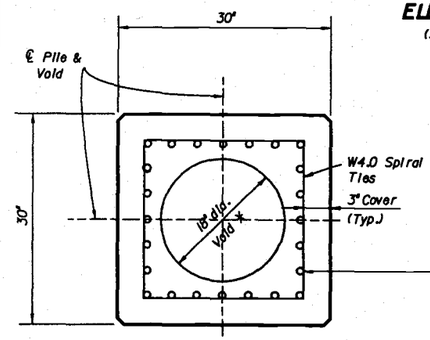

* Omit Void at Ends, see Elevation View

SECTION D-D
30" PILE

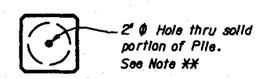

DETAIL "A"

ALTERNATE STRAND PATTERN ***

20 ~ 9/16" Ø (Spec.) L.R.S. -As = 0.196 In.² - 270K at 38,600# ea.
20 ~ 9/16" Ø L.R.S. -As = 0.192 In.² - 270K at 38,880# ea.
24 ~ 1/2" Ø (Spec.) L.R.S. -As = 0.167 In.² - 270K at 32,300# ea.
24 ~ 9/16" Ø S.R. -As = 0.192 In.² - 270K at 35,000# ea.
24 ~ 9/16" Ø (Spec.) S.R. -As = 0.196 In.² - 270K at 35,200# ea.
28 ~ 1/2" Ø L.R.S. -As = 0.153 In.² - 270K at 28,100# ea.
28 ~ 1/2" Ø (Spec.) S.R. -As = 0.167 In.² - 270K at 30,200# ea.

** NOTE:
The 18" Ø Void in the pile shall be positively vented to water or air after the final pile installation. If the 3/4" Ø vents are included in the pile cut-off section, two (2) new holes, 3/4" in diameter, shall be drilled on two (2) opposite faces of the pile below the bottom of substructure elevation. If the pile void can not be vented directly to water or air, then venting shall be provided by the use of a 1" Ø P.V.C. conduit through the 2" Ø hole(s) or the the 18" Ø void to the outside. This might involve venting through a substructure cap or column. Voids between segments of spliced piles shall be connected by 2" Ø hole(s). See Detail "A".

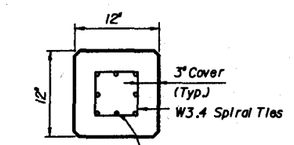

ALTERNATE STRAND PATTERN ***

8 ~ 7/16" Ø L.R.S. -As = 0.115 In.² - 270K at 21,700# ea.
8 ~ 1/2" Ø S.R. -As = 0.144 In.² - 250K at 24,100# ea.
12 ~ 3/8" Ø L.R.S. -As = 0.085 In.² - 270K at 14,800# ea.
12 ~ 3/8" Ø S.R. -As = 0.085 In.² - 270K at 15,600# ea.

SECTION C-C
12" PILE

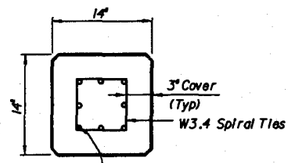

ALTERNATE STRAND PATTERN ***

8 ~ 1/2" Ø (Spec.) L.R.S. - As=0.167 In.² - 270K at 30,000# ea.
8 ~ 1/2" Ø (Spec.) S.R. - As=0.167 In.² - 270K at 31,570# ea.
8 ~ 1/2" Ø L.R.S. - As=0.153 In.² - 270K at 29,500# ea.
12 ~ 7/16" Ø S.R. - As=0.115 In.² - 270K at 21,200# ea.
12 ~ 1/2" Ø S.R. - As=0.144 In.² - 250K at 22,600# ea.
16 ~ 3/8" Ø S.R. - As=0.085 In.² - 270K at 16,070# ea.

SECTION C-C
14" PILE

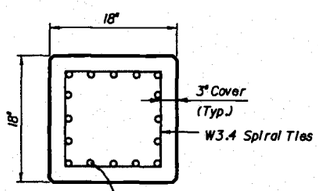

ALTERNATE STRAND PATTERN ***

12 ~ 1/2" Ø (Spec.) L.R.S. -As = 0.167 In.² - 270K at 32,400# ea.
12 ~ 9/16" Ø S.R. -As = 0.192 In.² - 270K at 35,100# ea.
16 ~ 1/2" Ø S.R. -As = 0.153 In.² - 270K at 26,800# ea.
20 ~ 7/16" Ø L.R.S. -As = 0.115 In.² - 270K at 20,000# ea.
20 ~ 7/16" Ø S.R. -As = 0.115 In.² - 270K at 21,100# ea.
24 ~ 3/8" Ø L.R.S. -As = 0.085 In.² - 270K at 16,300# ea.

SECTION C-C
18" PILE

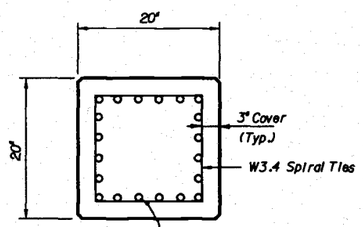

ALTERNATE STRAND PATTERN ***

16 ~ 1/2" Ø L.R.S. -As = 0.153 In.² - 270K at 30,000# ea.
16 ~ 1/2" Ø (Spec.) S.R. -As = 0.167 In.² - 270K at 31,570# ea.
20 ~ 1/2" Ø S.R. -As = 0.153 In.² - 270K at 26,500# ea.
24 ~ 7/16" Ø L.R.S. -As = 0.115 In.² - 270K at 20,500# ea.
24 ~ 7/16" Ø S.R. -As = 0.115 In.² - 270K at 21,740# ea.

SECTION C-C
20" PILE

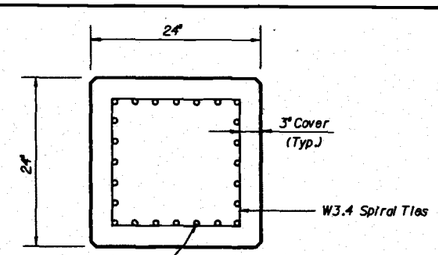

ALTERNATE STRAND PATTERN ***

20 ~ 1/2" Ø (Spec.) L.R.S. -As = 0.167 In.² - 270K at 33,820# ea.
20 ~ 9/16" Ø S.R. -As = 0.192 In.² - 270K at 36,290# ea.
20 ~ 9/16" Ø (Spec.) S.R. -As = 0.196 In.² - 270K at 37,050# ea.
24 ~ 1/2" Ø L.R.S. -As = 0.153 In.² - 270K at 29,000# ea.
24 ~ 1/2" Ø (Spec.) S.R. -As = 0.167 In.² - 270K at 31,570# ea.

SECTION C-C
24" PILE

*** NOTE:
Any of the given Alternate Strand Patterns may be utilized. The strands shall be located as follows: place one strand at each corner and place the remaining strands equally spaced between the corner strands.
The Total strand pattern shall be concentric with the nominal concrete section of the pile.

REVISIONS					
Date	By	Description	Date	By	Description
			92R		

	Names	Dates
Drawn by	TGA	1-91
Checked by	AJG	5-91
Designed by		
Checked by		
Approved by	NICHOLS/AJG	

ENGINEER OF RECORD:
STRUCTURES DESIGN OFFICE
CENTRAL OFFICE
605 Suwannee Street, MS 33
Tallahassee, Florida 32399-0450

LOGO:
DYER, RIDDLE, MILLS AND PRECOURT, INC.
ENGINEERS - SURVEYORS
1505 EAST COLONIAL DRIVE
ORLANDO, FLORIDA 32803

SEAL:

FLORIDA DEPARTMENT OF TRANSPORTATION
STRUCTURES DESIGN OFFICE

ROAD NO.	COUNTY	PROJECT NO.
SR 414	SEMINOLE	77002-3503

SHEET TITLE: 12", 14", 18", 20", 24", AND 30" PRESTRESSED CONCRETE PILES

PROJECT NAME: MAITLAND BOULEVARD

Drawing No. 2 of 2

Index No. 600

MAIT600.DGN

FED. ROAD DIST. NO.	STATE	PROJECT NO.	FISCAL YEAR	SHEET NO.
3	FLA.		98	A-8

(*) NOTE: See Superstructure Drawings for actual dimensions and Joint orientation.

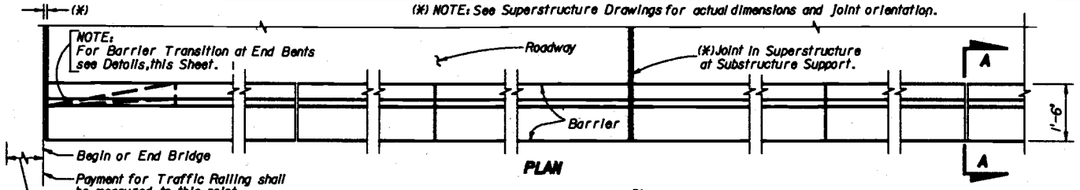

PLAN

** NOTE: ¾" Open Joints shall be provided at:
1 - Substructure supports where superstructure slab is continuous.
2 - Midspan where span length exceeds 90 feet.
3 - Intermediate locations (equally spaced) between midspan and substructure support where span length exceeds 180 feet.

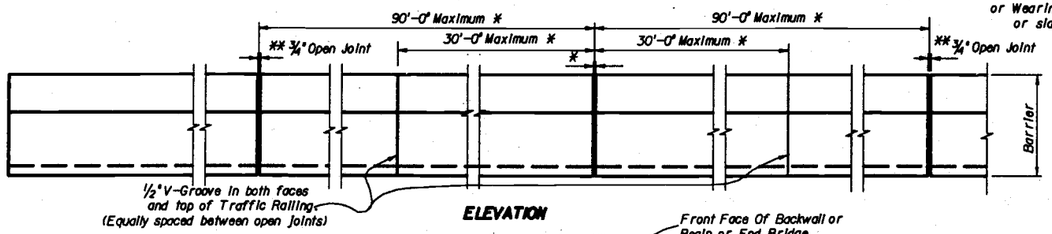

ELEVATION

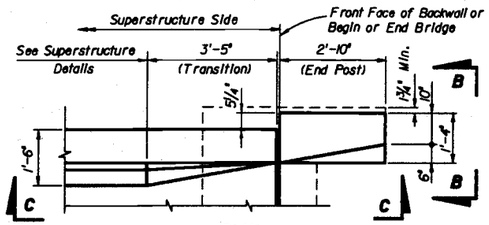

PLAN
(See Note 'A')

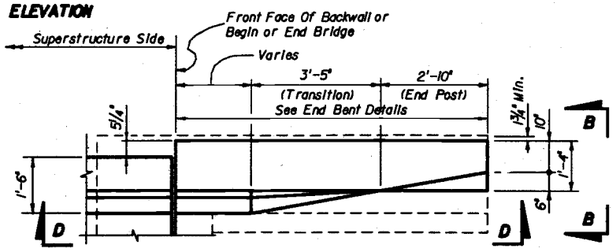

PLAN
(See Note 'B')

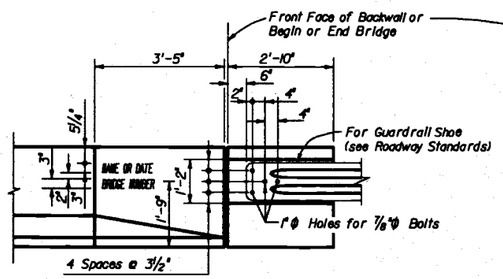

VIEW C-C

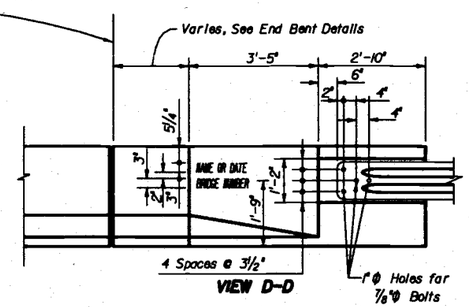

VIEW D-D

NOTE 'A':
If Barrier Transition is required and the Superstructure Depth (thickness) is 25 inches or less, the Transition shall be provided on the Superstructure side. To accommodate the Transition on the Superstructure the Reinforcement (Bars 5V, 5P & 4S) will need adjusting. The 1'-2" portion of Bars 5V shall be bent to fit and the horizontal 10" portion along the bottom shall be cut at the center.

NOTE 'B':
If Barrier Transition is required and the Superstructure Depth (thickness) exceeds 25 inches, the Barrier Transition shall be provided on the End Bent side.

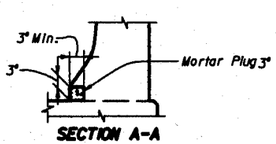

SECTION A-A

NOTE: When open joint in Barrier is not coincident with joint in the superstructure, the lower 3" portion of the open joint shall be plugged by filling with mortar in accordance with Article 400-15.1.

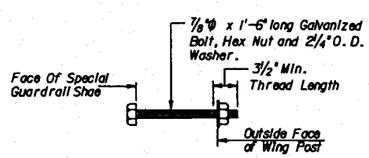

BOLT DETAIL

NOTE: The Cost of Bolts is to be included in the Contract Unit Price for Guardrail

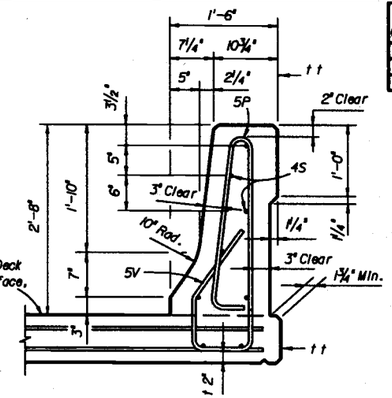

TYPICAL SECTION THRU TRAFFIC RAILING

t For Slabs 8" thick or less. If Slab is thicker than 8" or Barrier is located on a Retaining Wall, embed Bar 5V 6".

t t Where Barriers of adjacent bridges are to be built back to back, the outside vertical plane of the Barrier and Slab may coincide if so shown on the Superstructure Plans.

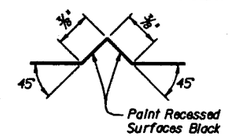

SECTION THRU RECESSED 'V' GROOVE TO FORM INSCRIBED LETTERS AND FIGURES

ROADWAY CROSS-SLOPE	LOW GUTTER Ø1	LOW GUTTER Ø2	HIGH GUTTER Ø1	HIGH GUTTER Ø2
0.00 to 0.02	90°	90°	90°	90°
0.02+ to 0.06	93°	81°	81°	93°
0.06+ to 0.10	96°	84°	84°	96°

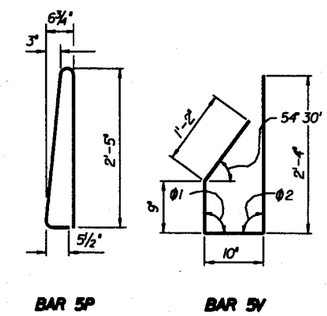

BAR 5P BAR 5V

BENDING DIAGRAMS

BAR BENDING NOTES

1. All bar dimensions in the bending diagrams are out to out.
2. Bars 5P and 5V shall be bent around a pin diameter = 2½".
3. The 9" and the 2'-4" vertical dimensions shown for bar 5V are based on a bridge slab 8" thick or greater and without raised sidewalk or wearing surface. If the slab thickness is less than 8" decrease these dimensions by an amount equal to the difference in the thicknesses; and if a wearing surface or a raised sidewalk is to be provided, increase the dimensions by an amount equal to the wearing surface thickness or sidewalk thickness.
4. Reinforcement for Barrier on Retaining Wall shall be the same as detailed above for an 8" slab with Ø1 = Ø2 = 90°.

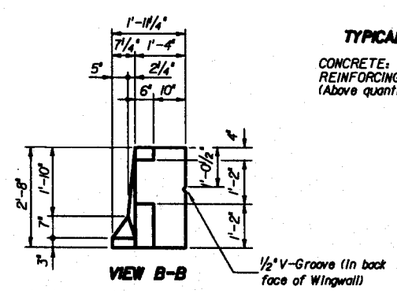

VIEW B-B

TYPICAL TRAFFIC RAILING QUANTITIES

CONCRETE: 0.1030 C.Y. per linear foot.
REINFORCING STEEL: 20.49 lbs. per linear foot.
(Above quantities are based on 8" slab and 0.02 '/' cross-slope)

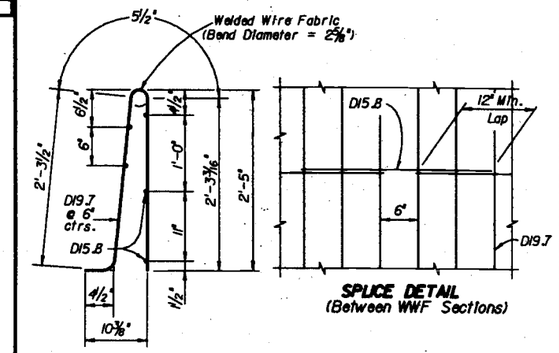

SPLICE DETAIL
(Between WWF Sections)

WELDED WIRE FABRIC

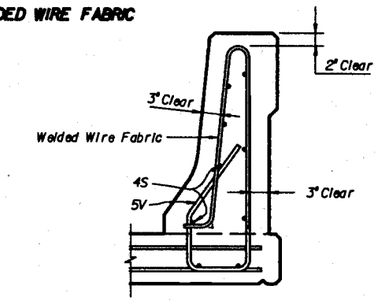

ALTERNATE REINFORCING DETAILS

The Contractor may utilize Welded Wire Fabric in lieu of all Bars 5P and Four (4) of the Bars 4S. Welded Wire Fabric shall conform to ASTM A497.

REINFORCING STEEL NOTES

Place longitudinal steel in bottom of slab as shown above to facilitate tying bars 5V. Do not add reinforcing steel for tie purposes.

All vertical reinforcing steel in Traffic Railing shall be No. 5 Bars spaced at 8" c.c. and all longitudinal reinforcing steel shall be No. 4 Bars. At all open joints all reinforcing shall have 2" minimum cover. At all construction joints Bars 4S may be continuous or spliced. All splices in Bars 4S shall be 1'-4" minimum.

TRAFFIC RAILING NOTES

CONCRETE AND REINFORCING STEEL: See General Notes.
PAYMENT: Traffic Railing on Bridges shall be paid for per linear foot (Item No. 400-148-1), which shall include all Concrete and Reinforcing Steel. Traffic Railing shall be measured along the centerline of the top surface of the concrete barrier.
MARKERS: Markers recording the elevation shall be placed on top of the Traffic Railing at End Bents. On bridges longer than 100 ft., one marker shall be placed at each end of the bridge. On bridges 100 ft. or less, one marker shall be placed at one end of the bridge only. Markers are to be furnished by the Florida Department of Transportation and installed by the Contractor. The cost of installing the markers shall be included in the Contract Unit Price for Traffic Railing (Barrier).
TRAFFIC RAIL CONSTRUCTION: The contractor may construct the railing by the use of stationary removable forms or by the use of slip forms without altering the rail dimensions shown above.
SUPERELEVATED BRIDGES: At the option of the Contractor, Traffic Railing and End Bent Wing Posts on superelevated bridges, may be constructed perpendicular to the roadway surface. The cost of modifications shall be at the Contractor's expense.
BOLTS: Bolts, Nuts, and Washers shall be hot dip galvanized in accordance with A.S.T.M. A-153.
RETAINING WALL: If the Barrier is to be provided on a retaining wall, the Barrier Section shall be as shown above. Other details such as transition for guardrail attachment, maximum spacing of ¾" open joint and ½" V-Groove shall also apply. See Wall Plans for Payment.
NAME AND BRIDGE NUMBER: The Name and Bridge Number to be placed on the Traffic Railing shall be seen on the driver's right when approaching bridge. The date is to be placed on the driver's left when approaching the bridge. The date shall be the year the bridge is constructed. Black plastic letters and figures 3" in height, as approved by the Engineer, may be used, in lieu of letters and figures formed by ⅜" V-Grooves. V-Grooves shall be formed by preformed letters and figures.

REVISIONS					
Date	By	Description	Date	By	Description
			92R		

	Names	Dates
Drawn by	WEH	2-89
Checked by	AJG	2-89
Designed by	—	—
Checked by	—	—
Approved by	AJG	

ENGINEER OF RECORD:
STRUCTURES DESIGN OFFICE
CENTRAL OFFICE
605 Suwannee Street, MS 33
Tallahassee, Florida 32399-0450

LOGO:
DYER, RIDDLE, MILLS AND PRECOURT, INC.
ENGINEERS - SURVEYORS
1505 EAST COLONIAL DRIVE
ORLANDO, FLORIDA 32803

SEAL:

FLORIDA DEPARTMENT OF TRANSPORTATION
STRUCTURES DESIGN OFFICE

ROAD NO.	COUNTY	PROJECT NO.
SR 414	SEMINOLE	77002-3503

SHEET TITLE: TRAFFIC RAILING BARRIER
Drawing No. 1 of 1
PROJECT NAME: MAITLAND BOULEVARD
Index No. 700

MAITTOO.DGN

FED. ROAD DIV. NO.	STATE	PROJECT NO.	FISCAL YEAR	SHEET NO.
3	FLA.		98	A-9

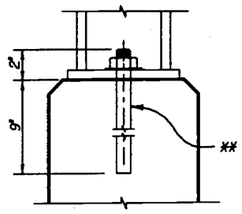

DETAIL 'A'

** 2 ~ 3/4"Φ x 11" Adhesive Anchor Bolts with hex nuts and washers set in 7/8" Φ holes filled with Epoxy Bonding Compound (Qualified Products List Class IV) in accordance with the manufacturer's specifications.

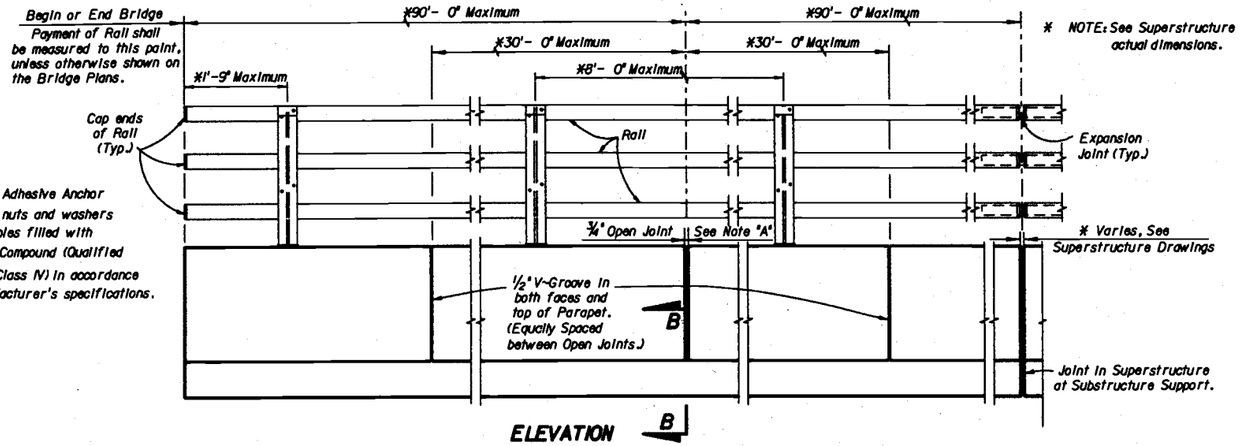

ELEVATION B

* NOTE: See Superstructure Drawing for actual dimensions.

Note "A": 3/4" Open Joints shall be provided at:
1. Substructure Supports where Superstructure Slab is continuous.
2. Mid-Span where Span length exceeds 90 feet.
3. Intermediate locations (equally spaced) between Mid-Span and Superstructure Support where Span length exceeds 180 feet.
4. Locations Coinciding with Joints for the Traffic Railing Barrier.

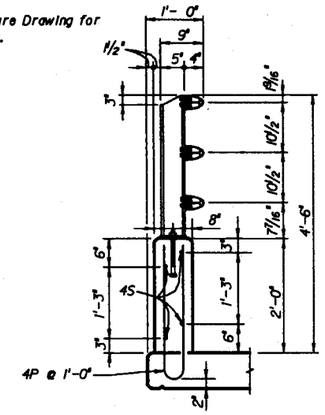

TYPICAL SECTION THRU PARAPET AND RAIL

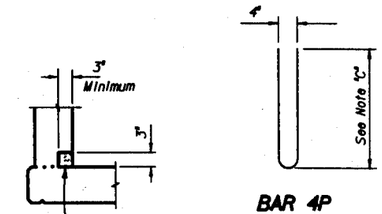

BAR 4P

Plug Open Joint with mortar in accordance with Article 400-15.1 to prevent water leakage.

SECTION B-B

Note "C": Designer shall fully detail reinforcement in Parapet and include concrete and reinforcing in the Superstructure quantities.

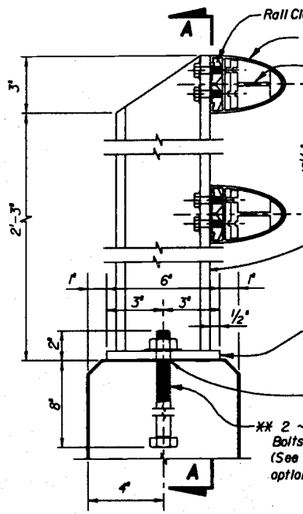

SECTION THRU RAIL

(Bottom rail element not shown)

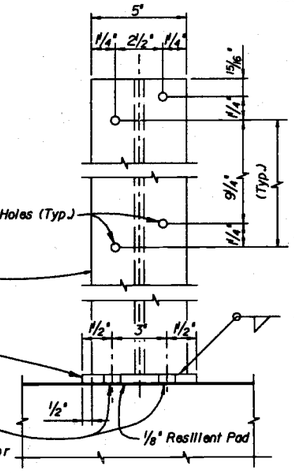

SECTION A-A

** NOTE: After nuts have been tightened the threads shall be nicked to prevent removal of nuts.

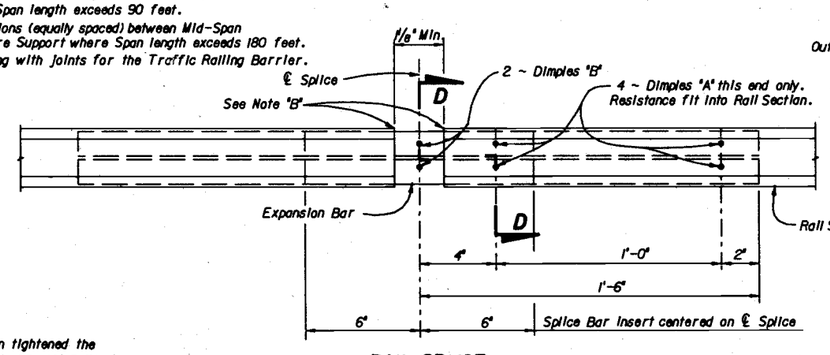

RAIL SPLICE

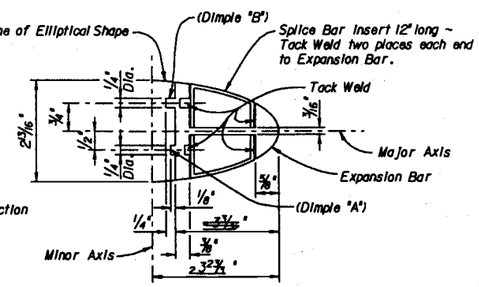

SECTION D-D

RAIL COMPONENTS

NOTE: Rail shall be continuous over a minimum of three posts before splicing.

NOTES

PAYMENT: The cost of all materials in Parapet shall be included in Concrete (Superstructure) and Reinforcing Steel (Superstructure). Aluminum Rail shall be paid for per linear foot and shall be measured along the centerline of the top surface of the rail. Payment includes Anchor Bolts, Nuts, Resilient Pads, and all incidental materials and labor required to complete the installation. Payment for the rail shall be made under Item No. 400-5-3.

SPECIFICATIONS FOR BRIDGE RAIL

POST: Fabricated wrought aluminum; A.S.T.M. B221, alloy 6061-T6 or alloy 6351-T5 with welding using filler wire 4043.

RAIL & RAIL SPLICE: Aluminum; A.S.T.M. B221, alloy 6061-T6 or alloy 6351-T-5.

RAIL CLAMP BAR: Aluminum; A.S.T.M. B221, alloy 6061-T6 or alloy 6351-T5.

ANCHOR BOLTS: Anchor Bolts shall be in accordance with A.S.T.M. A-36 or A-307. Anchor Bolts, nuts and washers shall be hot-dip galvanized in accordance with A.S.T.M. Designation A-153.

RAIL END CAP: A.S.T.M.B-26 sand cast aluminum alloy, SG 70A-F (Aluminum Association alloy designation A-356-F).

RAIL INSTALLATION: Rail Post shall be normal to Profile Grade. Posts shall be seated on 1/8" thick resilient pads in accordance with Article 932-2.1. The dimension shall be the same as the post base.
Rail expansion joints shall occur in the panel between posts on either side of Bridge expansion joints. Rail expansion joints shall be similar to rail splices with provision for movement equal to 1 1/2 times the bridge joint opening.

SHOP DRAWINGS: Complete details and description of materials of the proposed bridge rail shall be submitted by the contractor for the Engineer's approval prior to fabrication.

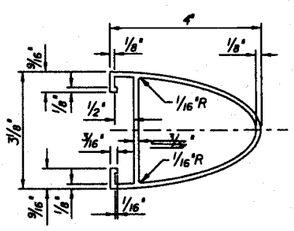

RAIL

NOTE "B" ~ Rough cut ends and edges of aluminum rails shall be ground or filed smooth to remove all sharp edges, nicks or burrs that would be injurious to the human touch.

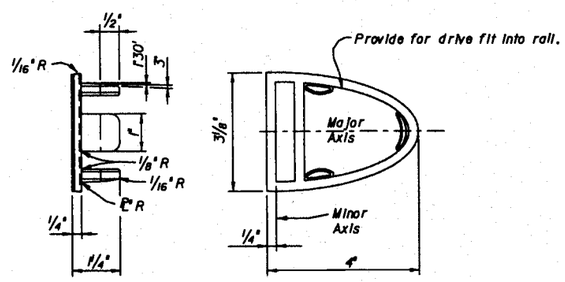

RAIL END CAP

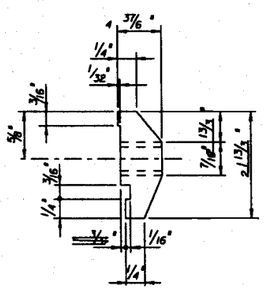

VIEW C-C

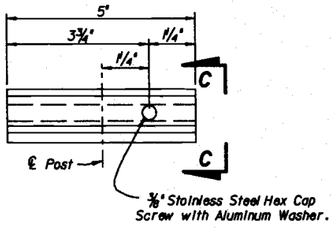

RAIL CLAMP BAR

REVISIONS					
Date	By	Description	Date	By	Description
			93R		

	Names	Dates
Drawn by	LFC	12-85
Checked by	RDS	1-86
Designed by	—	—
Checked by	—	—
Approved by	AJG	

ENGINEER OF RECORD: STRUCTURES DESIGN OFFICE, CENTRAL OFFICE, 605 Suwannee Street, MS 33, Tallahassee, Florida 32399-0450

LOGO: DYER, RIDDLE, MILLS AND PRECOURT, INC. ENGINEERS - SURVEYORS, 1505 EAST COLONIAL DRIVE, ORLANDO, FLORIDA 32803

SEAL:

FLORIDA DEPARTMENT OF TRANSPORTATION
STRUCTURES DESIGN OFFICE

ROAD NO.	COUNTY	PROJECT NO.
SR 414	SEMINOLE	77002-3503

SHEET TITLE: PEDESTRIAN/BICYCLE RAILING

PROJECT NAME: MAITLAND BOULEVARD

Drawing No. 1 of 1

Index No. 720

MAITRD.DGN

FED. ROAD DIV. NO.	STATE	PROJECT NO.	FISCAL YEAR	SHEET NO.
3	FLA.		98	A-10

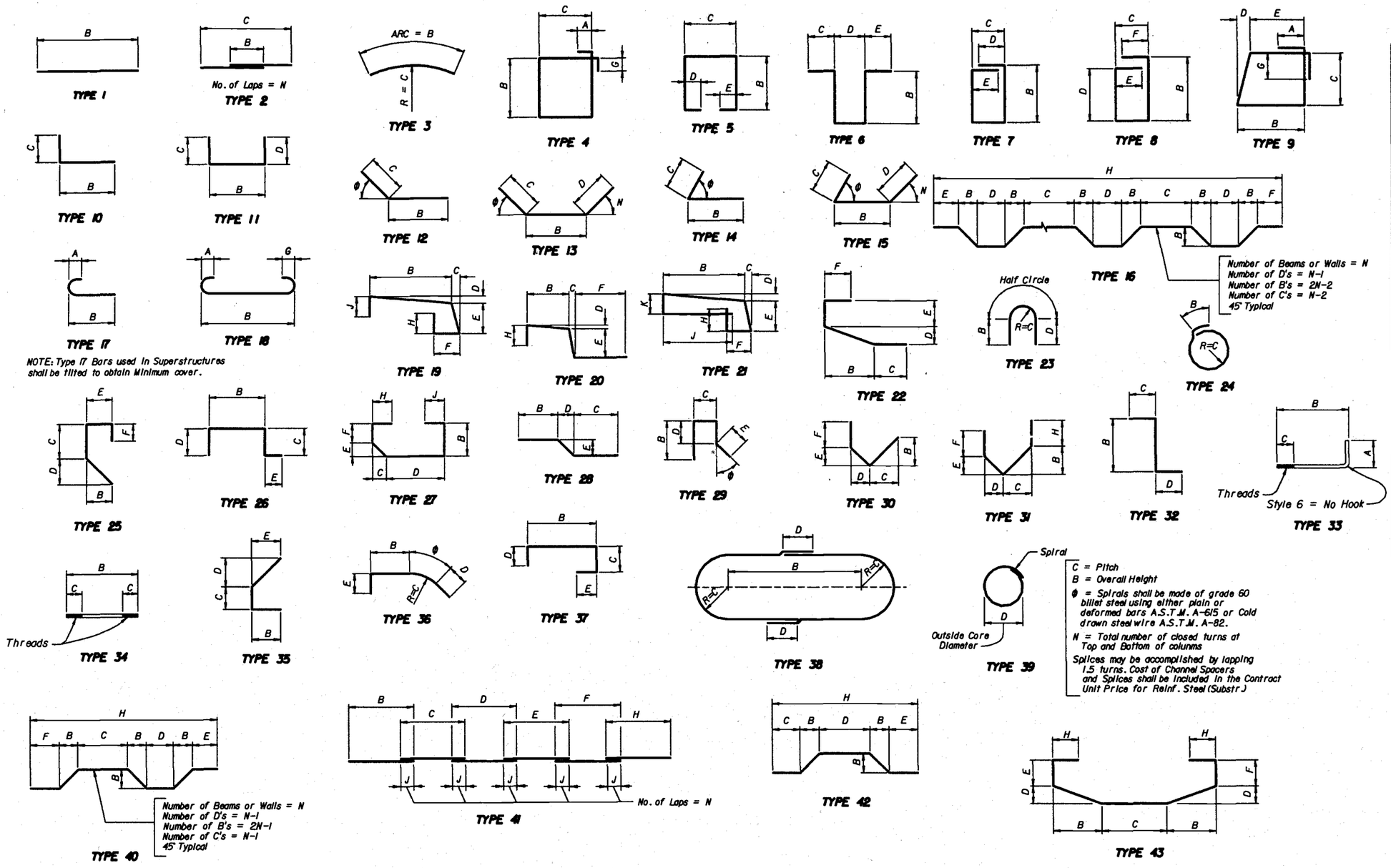

NOTE: For Bar Dimensions See REINFORCING BAR LIST Sheet.

HOOK DETAILS

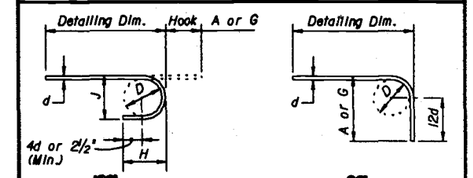

RECOMMENDED END HOOKS
ALL GRADES
D = 6d for #3 thru #8
D = 8d for #9, #10 and #11
D = 10d for #14 and #18

BAR SIZE	180° HOOKS		90° HOOKS
	A OR G	J	A OR G
#3	5"	3"	6"
#4	6"	4"	8"
#5	7"	5"	10"
#6	8"	6"	1'-0"
#7	10"	7"	1'-2"
#8	11"	8"	1'-4"
#9	1'-3"	11¾"	1'-7"
#10	1'-5"	1'-1¼"	1'-10"
#11	1'-7"	1'-2¾"	2'-0"
#14	2'-3"	1'-9¾"	2'-7"
#18	3'-0"	2'-4½"	3'-5"
STYLE	1		3

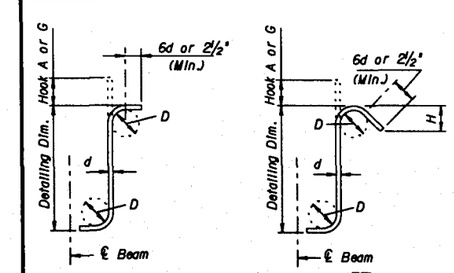

STIRRUPS
(TIES SIMILAR)

RECOMMENDED STIRRUP & TIE HOOK DIMENSIONS

BAR SIZE	D (IN.)	90° HOOKS	135° HOOKS	
		HOOK A or G	HOOK A or G	APPROX. H
#3	1½"	4"	4"	2½"
#4	2"	4½"	4½"	3"
#5	2½"	6"	5½"	3¾"
#6	4½"	1'-0"	7¾"	4½"
#7	5½"	1'-2"	9"	5¼"
#8	6"	1'-4"	10¼"	6"
STYLE		4	5	
STYLE 6 = NO HOOK				

Hook Styles Detailed on this sheet are for Illustration Only.
Actual Hook Style for any particular bar will be shown under A or G Heading on REINFORCING BAR LIST sheet.
All Dimensions are out to out.

REVISIONS						
Date	By	Description	Date	By	Description
			92		

	Names	Dates
Drawn by	RDH	1-86
Checked by	RDS	1-86
Designed by		
Checked by		
Approved by	AGM	

ENGINEER OF RECORD:
STRUCTURES DESIGN OFFICE
CENTRAL OFFICE
605 Suwannee Street, MS 33
Tallahassee, Florida 32399-0450

LOGO:
DYER, RIDDLE, MILLS AND PRECOURT, INC.
ENGINEERS - SURVEYORS
1505 EAST COLONIAL DRIVE
ORLANDO, FLORIDA 32803

SEAL:

FLORIDA DEPARTMENT OF TRANSPORTATION
STRUCTURES DESIGN OFFICE

ROAD NO.	COUNTY	PROJECT NO.
SR 414	SEMINOLE	77002-3503

SHEET TITLE: STANDARD BAR BENDING DETAILS
Drawing No. 1 of 1
PROJECT NAME: MAITLAND BOULEVARD
Index No. 1300

MAIT1300.DGN

FED. ROAD DIV. NO.	STATE	PROJECT NO.	FISCAL YEAR	SHEET NO.
3	FLA.	77002-3503		122

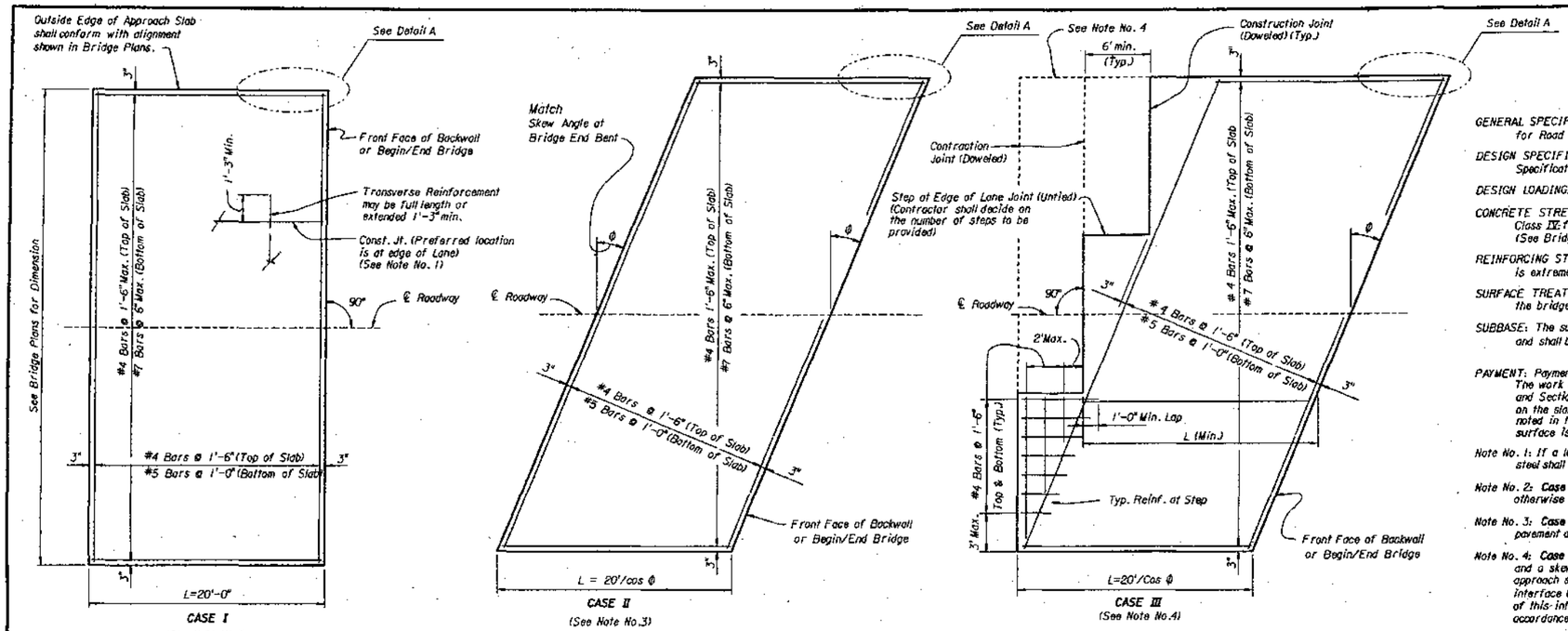

GENERAL NOTES

GENERAL SPECIFICATIONS: Florida Department of Transportation Standard Specifications for Road & Bridge Construction (1986) and Supplements thereto.

DESIGN SPECIFICATIONS: Designed in accordance with the 1989 edition of the AASHTO Specifications for Highway Bridges and Approved Revisions.

DESIGN LOADING: HS 20-44

CONCRETE STRESSES: Class II f'c = 3400 psi (If environment is slightly aggressive). Class IV f'c = 3400 psi (If environment is moderately or extremely aggressive). (See Bridge Plans for Environment Classification).

REINFORCING STEEL: Reinforcing Steel shall be Grade 60 (epoxy coated if the environment is extremely aggressive).

SURFACE TREATMENT: The top of the approach slab shall be given the same treatment as the bridge deck.

SUBBASE: The subbase shall consist of the same material shown in the Roadway Plans, and shall be placed parallel to the bottom of the Approach Slab.

PAYMENT: Payment shall be made under: Item No. 360-1 Concrete Approach Slab-each. The work shall comply with the details on this sheet, the Bridge and Roadway Plans, and Section 360. The bid price for approach Slab shall include all items placed on the slab, such as sidewalks, barriers, raised median etc., unless otherwise noted in the Bridge or Roadway Plans. Grooving of the Approach Slab riding surface is a Bridge Pay Item. See Bridge Plans.

Note No. 1: If a longitudinal joint is necessary or allowed by the Engineer, the transverse steel shall be extended as shown.

Note No. 2: **Case I** indicates an approach slab adjacent to a nonskewed bridge. Unless otherwise indicated, all details shown apply to **Cases II** and **III** also.

Note No. 3: **Case II** indicates an approach slab between a flexible roadway approach pavement and a skewed bridge.

Note No. 4: **Case III** indicates an approach slab between a rigid roadway approach pavement and a skewed bridge. The Contractor may at his option construct the entire approach slab trapezoidal or provide steps as shown. If steps are selected, the interface (transverse) between the approach slab and roadway pavement, and extension of this interface across the roadway pavement shall be doweled (contraction joint) in accordance with Index No. 305 (Roadway Standards).

Note No. 5: If the bridge or roadway plans indicate a raised sidewalk, this shall be provided on the approach slab.

Note No. 6: If the bridge or roadway plans indicate a barrier wall or a raised median, this shall be provided on the approach slab.

Note No. 7: If the bridge or roadway plans indicate a traffic railing (barrier), this shall be provided on the approach slab. If guardrail connection is required the barrier shall be transitioned as indicated on the standard drawings.

* ESTIMATED QUANTITIES		
ITEM	UNIT	QUANTITY
Concrete	C.Y.	0.333
Reinforcing Steel	LB.	54.200

* Quantities shown are per square yard (plan area), and do not include items placed on the slab such as: sidewalks, raised median and barriers.

NOTE: Total area of Approach Slab is given in the Bridge Plans.

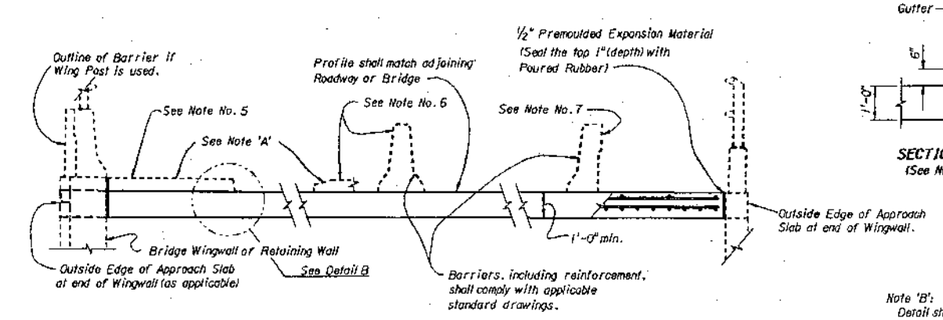

TRANSVERSE SECTION

Note 'A':
Raised Sidewalks and raised median shall be built using plain (unreinforced) concrete. The sidewalk width shall be extended to the outside edge of approach slab at areas beyond wingwall. See Roadway Plans for additional details.

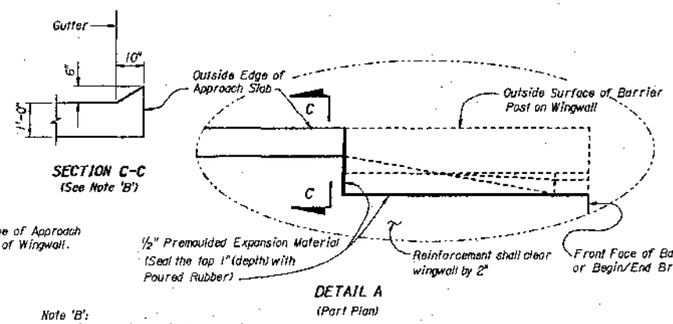

Note 'B':
Detail shown on Section C-C applies beyond Wing Post for Traffic Railing Barrier along the edge of the Bridge. This detail does not apply at raised sidewalk.

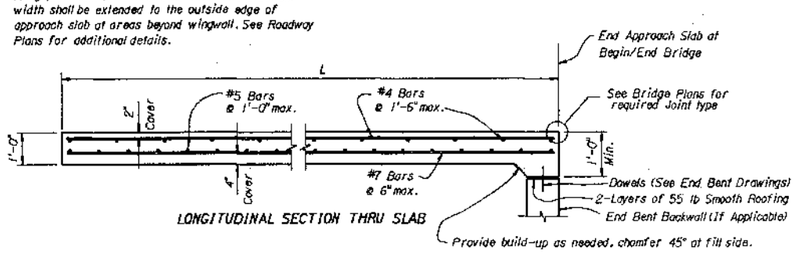

LONGITUDINAL SECTION THRU SLAB

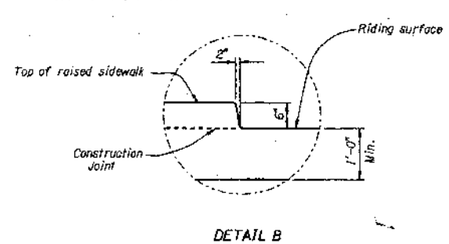

DETAIL B

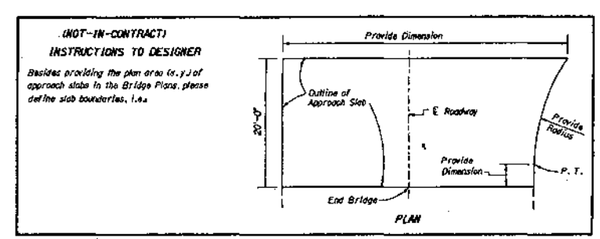

BR. NO.S 770074 & 770075

REVISIONS					
Date	By	Description	Date	By	Description
			90R		

	Names	Dates
Drawn by	SHM	2-89
Checked by	AJG	2-89
Designed by	AJG	3-89
Checked by	TJB	3-89
Approved by	AJG	

ENGINEER OF RECORD:
STRUCTURES DESIGN OFFICE
605 Suwannee Street, MS 33
Tallahassee, Florida 32399-0450

LOGO:

SEAL:

FLORIDA DEPARTMENT OF TRANSPORTATION
STRUCTURES DESIGN OFFICE

ROAD NO.	COUNTY	PROJECT NO.
	SEMINOLE	77002-3503

SHEET TITLE: APPROACH SLABS

PROJECT NAME: MAITLAND BOULEVARD OVER LAKE BOSSE

Drawing No. 1 of 1

Index No. 900

14-AUG-1990 10:46 ST2d120.151JASLAB.DGN:2

FED. ROAD DIV. NO.	STATE	PROJECT NO.	FISCAL YEAR	SHEET NO.
3	FLA.	77002-3503		123

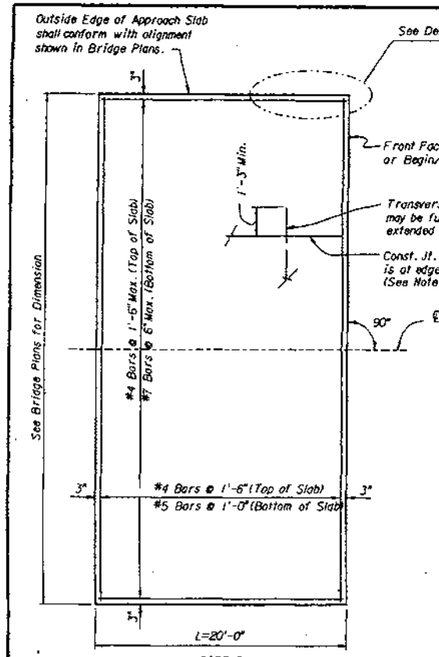

CASE I
(See Note No.2)

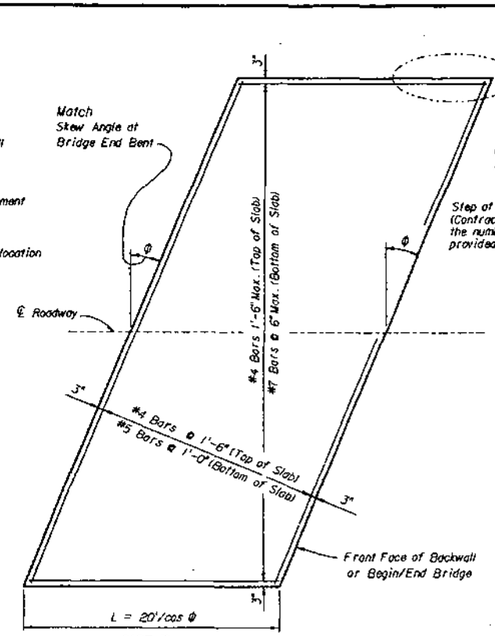

CASE II
(See Note No.3)

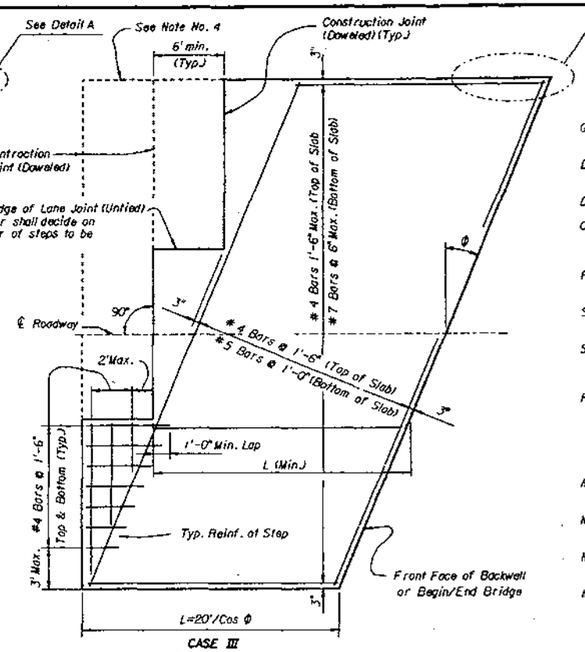

CASE III
(See Note No.4)

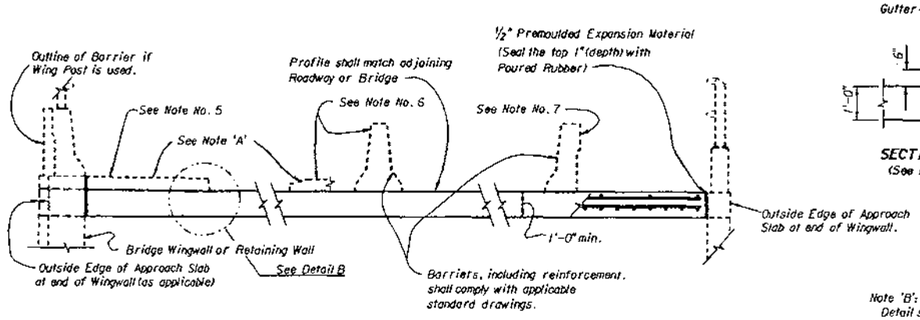

TRANSVERSE SECTION

Note 'A':
Raised Sidewalks and raised median shall be built using plain (unreinforced) concrete. The sidewalk width shall be extended to the outside edge of approach slab at areas beyond wingwall. See Roadway Plans for additional details.

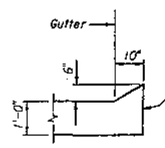

SECTION C-C
(See Note 'B')

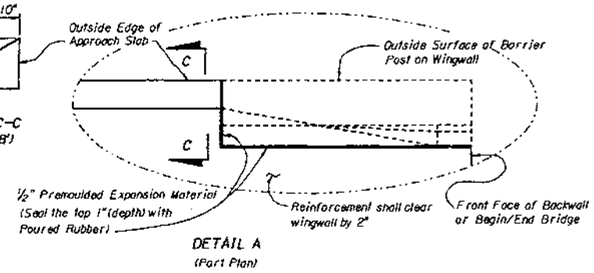

DETAIL A
(Part Plan)

Note 'B':
Detail shown on Section C-C applies beyond Wing Post for Traffic Railing Barrier along the edge of the Bridge. This detail does not apply at raised sidewalk.

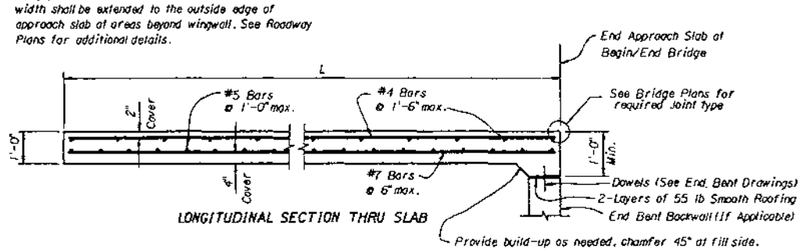

LONGITUDINAL SECTION THRU SLAB

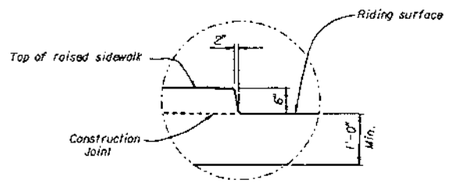

DETAIL B

GENERAL NOTES

GENERAL SPECIFICATIONS: Florida Department of Transportation Standard Specifications for Road & Bridge Construction (1986) and Supplements thereto.

DESIGN SPECIFICATIONS: Designed in accordance with the 1989 edition of the AASHTO Specifications for Highway Bridges and Approved Revisions.

DESIGN LOADING: HS 20-44

CONCRETE STRESSES: Class II: f'c = 3400 psi (If environment is slightly aggressive). Class IV: f'c = 3400 psi (If environment is moderately or extremely aggressive). (See Bridge Plans for Environment Classification).

REINFORCING STEEL: Reinforcing Steel shall be Grade 60 (epoxy coated if the environment is extremely aggressive).

SURFACE TREATMENT: The top of the approach slab shall be given the same treatment as the bridge deck.

SUBBASE: The subbase shall consist of the same material shown in the Roadway Plans, and shall be placed parallel to the bottom of the Approach Slab.

PAYMENT: Payment shall be made under: Item No. 360-1 Concrete Approach Slab-each. The work shall comply with the details on this sheet, the Bridge and Roadway Plans, and Section 360. The bid price for approach Slab shall include all items placed on the slab, such as sidewalks, barriers, raised median etc., unless otherwise noted in the Bridge or Roadway Plans. Grooving of the Approach Slab riding surface is a Bridge Pay Item, See Bridge Plans.

Note No. 1: If a longitudinal joint is necessary or allowed by the Engineer, the transverse steel shall be extended as shown.

Note No. 2: **Case I** indicates an approach slab adjacent to a nonskewed bridge. Unless otherwise indicated, all details shown apply to **Cases II** and **III** also.

Note No. 3: **Case II** indicates an approach slab between a flexible roadway approach pavement and a skewed bridge.

Note No. 4: **Case III** indicates an approach slab between a rigid roadway approach pavement and a skewed bridge. The Contractor may at his option construct the entire approach slab trapezoidal or provide steps as shown. If steps are selected, the interface (transverse) between the approach slab and roadway pavement, and extension of this interface across the roadway pavement shall be doweled (contraction joint) in accordance with Index No. 305 (Roadway Standards).

Note No. 5: If the bridge or roadway plans indicate a raised sidewalk, this shall be provided on the approach slab.

Note No. 6: If the bridge or roadway plans indicate a barrier wall or a raised median, this shall be provided on the approach slab.

Note No. 7: If the bridge or roadway plans indicate a traffic railing (barrier), this shall be provided on the approach slab. If guardrail connection is required the barrier shall be transitioned as indicated on the standard drawings.

* ESTIMATED QUANTITIES

ITEM	UNIT	QUANTITY
Concrete	C.Y.	0.333
Reinforcing Steel	LB.	54.200

* Quantities shown are per square yard (plan area), and do not include items placed on the slab such as: sidewalks, raised median and barriers.

NOTE: Total area of Approach Slab is given in the Bridge Plans.

(NOT-IN-CONTRACT)
INSTRUCTIONS TO DESIGNER

Besides providing the plan area (s.y.) of approach slabs in the Bridge Plans, please define slab boundaries, i.e.:

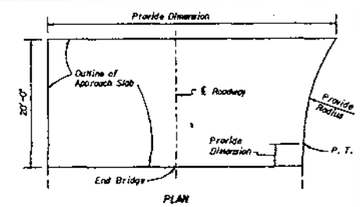

PLAN

REVISIONS									
Date	By	Description	Date	By	Description		Notes	Dates
			90R			Drawn by	SHM	2-89
						Checked by	AJG	2-89
						Designed by	AJG	3-89
						Checked by	TJB	3-89
						Approved by	AJG	

ENGINEER OF RECORD:
STRUCTURES DESIGN OFFICE
605 Suwannee Street, MS 33
Tallahassee, Florida 32399-0450

LOGO:

SEAL:

FLORIDA DEPARTMENT OF TRANSPORTATION
STRUCTURES DESIGN OFFICE

ROAD NO.	COUNTY	PROJECT NO.
	SEMINOLE	77002-3503

SHEET TITLE: APPROACH SLABS

PROJECT NAME: MAITLAND BOULEVARD OVER LITTLE WEKIVA RIVER

Drawing No. 1 of 1

Index No. 900

FED. ROAD DIV. NO.	STATE	PROJECT NO.	FISCAL YEAR	SHEET NO.
3	FLA.		98	A-7

INDEX OF BRIDGE SHEETS

GENERAL SHEETS

A-1 Index of Bridge Sheets
A-2 General Notes
A-3 Typical Notes And Details For AASHTO Type II, III And IV Prestressed Beams-Index 100
A-4 Typical Notes And Details For Florida Bulb T-72 Prestressed Beams
A-5 Composite Neoprene Bearing Pads
A-6 12", 14", 18", 20", 24" And 30" Prestressed Concrete Piles (1 Of 2)-Index 600
A-7 12", 14", 18", 20", 24" And 30" Prestressed Concrete Piles (2 Of 2)-Index 600
A-8 Traffic Railing Barrier-Index 700
A-9 Pedestrian / Bicycle Railing-Index 720
A-10 Standard Bar Bending Details - Index 1300 Mod.

MAITLAND BOULEVARD OVER LAKE BOSSE (NO. 770074)

B-1 General Plan and Elevation
B-2 Construction Sequence
B-3 NOT USED
B-4 Bridge Hydraulic Recommendations
B-5 Report of SPT Borings For Structure
B-6 Report of SPT Borings For Structure
B-7 Report of SPT Borings For Structure
B-8 Report of SPT Borings For Structure
B-9 Report of SPT Borings For Structure
B-10 Report of SPT Borings For Structure
B-11 Report of SPT Borings For Structure
B-12 Report of SPT Borings For Structure
B-13 Report of SPT Borings For Structure
B-14 Foundation Layout (1 Of 1)
B-15 Foundation Layout (2 Of 2)
B-16 End Bent No. 1 (1 of 2)
B-17 End Bent No. 1 (2 of 2)
B-18 End Bent No. 7 (1 of 2)
B-19 End Bent No. 7 (2 of 2)
B-20 End Bent Details
B-21 Pier No. 2 (1 Of 2)
B-22 Pier No. 2 (2 Of 2)
B-23 Pier No. 3 (1 Of 2)
B-24 Pier No. 3 (2 Of 2)
B-25 Pier No. 4 (1 Of 2)
B-26 Pier No. 4 (2 Of 2)
B-27 Pier No. 5 (1 Of 2)
B-28 Pier No. 5 (2 Of 2)
B-29 Pier No. 6 (1 Of 2)
B-30 Pier No. 6 (2 Of 2)
B-31 Pier Details (1 Of 2)
B-32 Pier Details (2 Of 2)
B-33 Finish Grade Elevations (1 Of 3)
B-34 Finish Grade Elevations (2 Of 3)
B-35 Finish Grade Elevations (3 Of 3)
B-36 Superstructure Plan - Span 1 And 2
B-37 Superstructure Plan - Span 3
B-38 Superstructure Plan - Span 4 And 5
B-39 Superstructure Plan - Span 6
B-40 Superstructure Section Spans 1,2,4,5&6
B-41 Superstructure Section Span 3
B-42 Superstructure Details
B-43 Framing Plan - Span 3
B-44 Girder Elevation
B-45 Girder Details (1 Of 2)
B-46 Girder Details (2 Of 2)
B-47 Bearing Details - Span 3
B-48 Miscellaneous Details (1 Of 5)
B-49 Miscellaneous Details (2 Of 5)
B-50 Miscellaneous Details (3 Of 5)
B-51 Miscellaneous Details (4 Of 5)
B-52 Miscellaneous Details (5 Of 5)
B-53 Florida Bulb-T 72
B-54 Reinforcing Bar List (1 Of 3)
B-55 Reinforcing Bar List (2 Of 3)
B-56 Reinforcing Bar List (3 Of 3)

MAITLAND BOULEVARD OVER LITTLE WEKIVA RIVER (NO. 770075)

C-1 General Plan and Elevation
C-2 Bridge Hydraulic Recommendations
C-3 Report of SPT Borings For Structure
C-4 Report of SPT Borings For Structure
C-5 Foundation Layout
C-6 End Bent No. 1 (1 of 2)
C-7 End Bent No. 1 (2 of 2)
C-8 End Bent No. 2 (1 of 2)
C-9 End Bent No. 2 (2 of 2)
C-10 End Bent Details
C-11 Finish Grade Elevations
C-12 Superstructure Plan
C-13 Superstructure Section
C-14 Superstructure Details
C-15 Miscellaneous Bridge Details (1 Of 2)
C-16 Miscellaneous Bridge Details (2 Of 2)
C-17 AASHTO Type IV Beams - Index S-105
C-18 Reinforcing Bar List
C-19 Oranole Road Bridge Removal

RETAINING WALLS

W-1 General Notes And Section
W-2 Report Of SPT Borings For Structure
W-3 Report Of SPT Borings For Structure
W-4 Report Of SPT Borings For Structure
W-5 Report Of SPT Borings For Structure
W-6 Report Of SPT Borings For Structure
W-7 Report Of SPT Borings For Structure
W-8 Report Of SPT Borings For Structure
W-8A Report Of SPT Borings For Structure
W-9 Retaining Wall No. 1 Alignment
W-10 Retaining Wall No. 2 Alignment
W-11 Retaining Wall No. 1 & No. 2 Details (1 Of 2)
W-12 Retaining Wall No. 1 & No. 2 Details (2 Of 2)
W-13 Retaining Wall No. 3 Alignment
W-14 Retaining Wall No. 4 Alignment
W-15 Retaining Wall No. 3 & No. 4 Details
W-16 Retaining Wall No. 5 Alignment And Details
W-17 Thru W-21 Tensor Retaining Wall Standard Details

SOUND WALLS

X-1 Sound Wall Alignment Key Plan
X-2 Sound Wall General Notes
X-3 Report Of SPT Borings For Structure
X-4 Report Of SPT Borings For Structure
X-5 Report Of SPT Borings For Structure
X-6 Report Of SPT Borings For Structure
X-7 Report Of SPT Borings For Structure
X-8 Report Of SPT Borings For Structure
X-9 Report Of SPT Borings For Structure
X-10 Report Of SPT Borings For Structure
X-11 Report Of SPT Borings For Structure
X-12 Sound Wall No. 3
X-13 Sound Wall No. 3
X-14 Sound Wall No. 3
X-15 Sound Wall No. 4
X-16 Sound Wall No. 4
X-17 Sound Wall No. 4
X-18 Sound Wall No. 4
X-19 Sound Wall No. 4
X-20 Sound Wall No. 2
X-21 Sound Wall No. 2
X-22 Sound Wall No. 2
X-23 Sound Wall No. 6
X-24 Sound Wall No. 6
X-25 Sound Wall No. 5
X-26 Sound Wall Details (1 OF 3)
X-27 Sound Wall Details (2 OF 3)
X-28 Sound Wall Details (3 OF 3)

W.P.I. 5114599 (ORANGE COUNTY)
W.P.I. 5117676 (SEMINOLE COUNTY)

REVISIONS

Date	By	Description	Date	By	Description

	Names	Dates
Drawn by	JLA/JJS	3/96
Checked by	MKA	3/96
Designed by	MKA	3/96
Checked by	PM	3/96
Approved by	Peeter Mannik, P.E.	

ENGINEER OF RECORD:
DYER, RIDDLE, MILLS AND PRECOURT, INC.
1508 EAST COLONIAL DRIVE
ORLANDO, FLORIDA 32803

LOGO: DRMP

SEAL: 3/4/98

FLORIDA DEPARTMENT OF TRANSPORTATION
STRUCTURES DESIGN OFFICE

ROAD NO.	COUNTY	PROJECT NO.
SR414	ORANGE SEMINOLE	75011-3508 77002-3503

SHEET TITLE: INDEX OF BRIDGE SHEETS

PROJECT TITLE: MAITLAND BOULEVARD

Drawing No.

Index No.

JA/JS04/07/97 07:50AM M:\000BRK\RET\MAITNDEX.DWG

GENERAL NOTES

FED. ROAD DIV. NO.	STATE	PROJECT NO.	FISCAL YEAR	SHEET NO.
3	FLA.		98	A-2

A. SPECIFICATIONS

1. CONSTRUCTION:
 a) Florida Department Of Transportation Standard Specifications For Road And Bridge Construction, (1991 Edition) And Supplements Thereto.
2. DESIGN:
 a) AASHTO Standard Specifications For Highway Bridges, (1992 Edition), And Applicable Interims Through 1995.
 b) Florida Department Of Transportation Structures Design Guidelines - Revision Date April 3, 1995.
 c) "INSITU Soil Improvement Techniques" AASHTO - AGC - ARTBA Task Force 27 Ground Modifications Techniques Janurary 1990.

B. DESIGN LOADINGS

1. DEAD LOADS:
 a) Unit Weight Of Reinforced Concrete: 150 PCF
 b) Future Wearing Surface: 15 PSF
 c) Traffic Railing: 418 PLF
 d) Pedestrian Railing: 200 PLF
 e) Stay In Place Forms: Design Includes An Allowance For 20 PSF Over The Projected Plan Area For The Unit Weight Of Metal Forms And Concrete Required To Fill The Form Flutes. Stay In Place Forms Shall Not Be Used For Cantilever Portions Of The Deck Slab Including The Temporary Cantilever Portions Due To The Phased Construction Of Span 3 Of Lake Bosse Bridge.
 f) Utility Pipe Weight (Water Included)
  36" ø -Little Wekiva River Bridge-653 PLF
  30" ø -Lake Bosse Bridge-466 PLF
2. LIVE LOADS:
 HS 20-44 With Impact (Prestressed Beams Designed For An Additional 5% Live Load). See Also Sheet B-2 For Crane Loads.
3. WIND LOADS:
 a) Basic Wind: In Accordance With AASHTO Specifications.
4. DESIGN TEMPERATURES:

SUPERSTRUCTURE:	MEAN	RISE FROM MEAN	FALL FROM MEAN	RANGE
-Concrete Beams	70°F	+25°F	-25°F	50°F
-Composite Steel Beams	70°F	+35°F	-35°F	70°F

 -Concrete Thermal Coefficient = 0.000005 Per Degree F (Based On Florida Limerock Aggregate)
 -Steel Thermal Coefficient = 0.0000065 Per Degree F
5. EARTHQUAKE:
 a) Seismic Performance Category B
  Acceleration Coefficient = 0.025
  Little Wekiva River - Per AASHTO 3.11 Of Division 1-A
  Lake Bosse - Category B
6. DISTRIBUTION VALUES:

	INTERIOR BEAMS	EXTERIOR BEAMS
a) Live Load (As Function Of Beam Spacing, S)	S/5.5	S/5.5
b) Traffic Barrier (PLF)	Per Structures Design Guidelines 10.12	

C. DESIGN METHOD

a) Strength Design Method (Load Factor Design) Except That The Design Of Prestressed Concrete Piles, And The Loads On Piles Have Been Computed For Service Loads. Prestressed Beams Are Service Load Design And Checked For Ultimate Capacity.

D. FOUNDATION

Location	Pile Type
Little Wekiva River Bridge	18"Sq. Prestressed Conc.
Lake Bosse Bridge	20"ø Steel Pipe (Sand/Concrete Filled. See Pile Notes)

For Pile Information See Foundation Layout Sheets & Technical Special Provisions.

E. DECK SEQUENCE POURING AND SCREEDING

a) Decks Shall Be Placed As Follows: After Pouring The First Unit Succeeding Pours Shall Begin At The End Away From And Proceed Toward The Previously Placed Unit.

b) The Riding Surface Of Bridge Deck Shall Be Screeded To Finish Grade With No Allowance For Permanent Camber.

F. END BENTS

a) Top Of Traffic Railing Shall Be Constructed Parallel To Grade.

G. MATERIALS

1. CONCRETE:
 Concrete Shall Be In Accordance With F.D.O.T. Specification Section 346.

a)

CLASS	Maximum Design Compressive Stress (psi)	Minimum 28-Day Compressive Strength (psi)	Design Unit Weight Incl. Reinforcing (pcf)	Modulus Of Elasticity (ksi)	Location Of Concrete In Structure
II (BRIDGE DECK)	fc = 1,800	f'c = 4,500	150	4,500	C.I.P. Conc. For Superstructure In Slightly Aggressive Environment Only
III	fc = 2000	f'c = 5000	150	3,700	MSE Walls
IV	fc = 2,200	f'c = 5,500	150	3,900	All C.I.P. Concrete In Extremely Aggressive Environment (Substructure)
IV	fc = 2,200	f'c = 5,500	150	3,900	Prestressed Conc. Beams @ Little Wekiva River
V	fc = 2,600	f'c = 6,500	150	4,200	Prestressed Conc. Beams @ Lake Bosse
V (SPECIAL)	fc = 2,400	f'c = 6,000	150	4,000	Prestressed Conc. Piles

 b) Construction Joints Will Be Permitted Only At Location Indicated On Plans. Additional Construction Joints Or Alterations To Those Shown Shall Require Approval Of The Engineer.
2. REINFORCING STEEL:
 a) Prestressing Strands Used For Precast Beams Shall Be 270KSI, Low Relaxation, 1/2" Diameter Strands With With Nominal Steel Area Equal To 0.153 Sq. In. Prestressing Strands Used For Precast Piles Shall Be In Accordance With Index 600 (See Sheet A-6 & A-7).
 b) Reinforcement Shall Be ASTM A615, Grade 60.
 c) All Dimensions Pertaining To The Location Of Reinforcing Are To The Centerline Of Bar Except Where The Clear Dimension Is Shown To Face Of Concrete.
 d) Reinforcement Detail Dimensions Are Out To Out Of Bars.
 e) E.F. Denotes "Each Face".
  N.F. Denotes "Near Face".
  F.F. Denotes "Far Face".
  F.F.B.W. Denotes "Front Face Of Back Wall".
  U.N.O. Denotes "Unless Noted Otherwise".
  C.I.P. Denotes "Cast-In-Place".
  D.I.P. Denotes "Ductile Iron Pipe".
 f) Concrete Cover For Reinforcement Shall Be:
  -Superstructure (CIP): 2"
  -Substructure (CIP): 4"
  -Precast, Pretensioned Piling: 3"
  -Concrete Cast Against Earth: 4 1/2"
 g) Concrete Covers Shown In The Plans Do Not Include Placement And Fabrication Tolerances Unless Shown As "Minimum Cover". See FDOT Standard Specifications For Allowable Tolerances.
3. STRUCTURAL STEEL:
 a) All Structural Steel Shall Be In Accordance With ASTM A709, Grade 50W (Weathering Steel).
 b) All Connection Bolts Are To Be 7/8" Diameter, High Strength Bolts, ASTM A325 (Type 3). Nuts Shall Be In Accordance With ASTM A563 Grade C3. Washers Shall Be In Accordance With ASTM F436. All Connections Have Been Designed As Slip Critical Connections (Class A-Clean Mill Scale). Any Loose Rust And Loose Mill Scale Plus Any Oil, Grease, Dirt, Etc. On the Joint Contact Or Faying Surfaces Must Be Removed Prior To Bolting.
 c) All Anchor Bolts Shall Be In Accordance With AASHTO M314, Grade 55. The Anchor Bolts, Nuts And Washers Shall Be Hot Dip Galvanized In Accordance With ASTM A153 Specifications. Bearing Plates Shall Be ASTM A709, Grade 50W.
 d) Contractor Is Responsible For Providing Proper Cross Bracing, Top Flange Bracing, etc. During All Phases Of Construction. Include The Method Of Bracing, Etc. In The Shop Drawing Submittal.
 e) All Structural Steel For Girder Framing (Including Pile Girders, Diaphragms, Cross Bracing, Etc.) Shall Be Fabricated By a Certified Shop Meeting The Requirements Of AISC Category III Certification.
 f) Jacking Support Plates (See Sheet B-20) Shall Be ASTM A666, Type 304, 1/16 Hard (fy=45,000psi) Stainless Steel.
4. PIPE PILES:
 a) See Foundation Layout Sheet For Details (Sheet No. B-14 & B-15).

H. WELDING

a) Weld Details And The Welding Operation Shall Be In Accordance With The Current Edition Of The ANSI-AASHTO-AWS (D1.5) Bridge Welding Code. Welds Requiring Nondestructive Testing Shall Be Radiographically Inspected, Except Where The Geometry Of The Region Of The Weld Will Not Permit Satisfactory Information To Be Secured For Verification Of The Weld Quality. When Such Geometrical Conditions Exist, Other Inspection Procedures Or Combination Of Procedures Such As Ultrasonic Inspection, Dye Penetrant Inspection, And/Or Magnetic Particle Inspection May Be Required. No Field Welding Is Allowed Except For Pipe Pile Splices.

J. PREVENTION OF RUST STAINS FROM WEATHERING STEEL

a) Pier Cap No. 3 And 4 Shall Be Completely Wrapped With A Minimum Of Two Layers Of 6 Mil Polyethylene Sheeting In Order To Provide A Watertight Seal. Joints In Sheeting Must Be Watertight. The Sheeting Shall Remain In Place, Without Tears Or Other Damage, Until The Deck Has Been Poured And The Expansion Joints Are In Place. Only Then Shall The Contractor Remove The Sheeting.

K. CONSTRUCTION SEQUENCE

a) Phase Construction Is Anticipated At Lake Bosse Bridge Only. See Construction Sequence Sheet For Details.

L. REMOVAL OF EXISTING BRIDGE

a) See Oranole Road Bridge Removal Plan Sheet C-19.

M. PAINTING

Painting Shall Be In Accordance With Specification 561.

N. ENVIRONMENTAL CLASSIFICATION

a) Superstructures: Slightly Aggressive For All Bridges.
b) Substructure: Extremely Aggressive For All Bridges (Soil-pH =4.3)

O. JACKING LOAD NOTES

a) Jacking Loads Include Dead Load And Live Load Plus Impact. Jacking Equipment Is Not A Part Of This Contract And Does Not Need To Be Provided By The Bridge Contractor.
b) Jacks Shall Be Equipped With Locking Rings Which Will Prevent Movement In The Event Hydraulic Pressure Is Lost. Jacks Shall Be Locked Off Prior To Removal Of Any Bearing Assemblies.
c) Jacking Shall Continue Until Pads Can Be Freed, But the Amount Of Lift Shall Not Exceed 1/4 Inches Above The Top Of Pad.
d) Properly Sized Shim Plates Shall Be Provided To Limit The Ultimate Load Bearing Stresses On Concrete In Accordance With Article 8.16.7 Of AASHTO Standard Specifications.

P. DATUM

a) All Elevations Refer To NGVD 1929 Datum.

Q. UTILITIES

a) Existing Utilities Shown At Approximate Locations. Exact Locations Shall Be Determined By The Contractor Prior To The Start Of Construction.
b) Contractor Shall Reference The Utility JPA & Utility Adjustment Plans In Roadway Set For Utility Relocation. Utility Relocations In Bridge Vicinity Not Shown In Bridge Plans.
c) Proposed Storm Sewer Utilities On Bridge:

Location:	Utility:
Little Wekiva River - Under Right Overhang	36"øD.I.P.
Lake Bosse Bridge - Under Left Overhang	30"øD.I.P.

 See Miscellaneous Bridge Details Sheets.

R. BRIDGE FLOOR GROOVING

All Roadway Riding Surfaces Of The Bridge Deck Slabs Shall Be Grooved In Accordance With The Requirements Of Class 4 Floor Finish In FDOT Specification (Section 400-15.2.5)

S. STAY-IN-PLACE FORMS

All Embedded Items And Accessories Required For Stay-In-Place Forms Shall Be Included In The Shop Drawing Submittal.

T. SURFACE FINISH

The Top And Both Faces Of Traffic Railing (Barrier) And End Post, The Top And Both Faces Of The Sidewalk Parapet, And The Exterior Vertical Face Of The Bridge Deck Shall Recieve A "Class V Applied Finish Coating" In Accordance With The Specifications. See The "Surface Finish Details" On This Sheet. Color Of The Class V Applied Finish Shall Match The Color Specified For The Sound Barrier Walls.

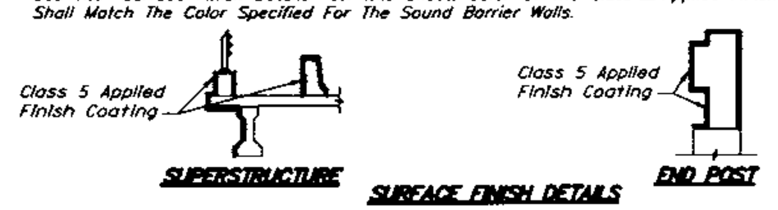

SURFACE FINISH DETAILS

BID ITEMS NOTES

1) Payment For Incidental Items Not Specifically Covered In The Individual Bid Items Shall Be Included In The Contract Prices For The Bid Items.
2) The Following Numbers Of Standard And Non-Standard Composite Neoprene Bearing Pads (Pay Item No. 400-147) Are Required:
 Little Wekiva River Bridge -22 Type IV Composite Pads For A Total Volume Of 3.7 C.F.
 Lake Bosse Bridge- 132 Non-Standard Composite Pads For A Total Volume Of 55.9 C.F.
 Neoporene Bearing Pads Shall Be Furnished And Installed By The Contractor.
3) Bid Item No. 400-7 Bridge Floor Grooving Shall Not Include Approach Slab Grooving. (See Roadway Plans) The Area Of Bridge Floor Grooving Shall Be Determined By Measurement Of Area Bounded By The Gutter Lines And The Beginning And End Of The Bridge Deck Slab.
4) The Total Plan Area Of Approach Slabs Required:
 Little Wekiva River Bridge- 4,910 Ft^2
 Lake Bosse Bridge - 4,660 Ft^2
 See Miscellaneous Bridge Details Sheet For Details. Additional Details Of Approach Slabs And Payment Are Included In The Roadway Plans.
5) The Removal Of The Existing Oranole Road Bridge Over The Little Wekiva River Shall Be Paid For Under Pay Item 110-3 Removal Of Existing Structures. (Approx. Deck Area = 1560 S.F.)
6) Total Quanity Of Preformed Pile Holes Required: Lake Bosse = 118 (Ea.) Little Wekiva River = 22 (Ea.) See Foundation Layout Sheet & Technical Special Provisions For Preformed Pile Hole Requirements.
7) Total Quantity Of Structural Steel, Pay Item No. 460-2-20 = 1,132,741 lbs.
8) For Additional Bid Item Information See The Following Sheets: B-2, B-14, B-47, B-48, B-49, B-51, C-14, C-15, W-1 And X-2.
9) The Temporary Cofferdam System Shall Be Paid For Under Pay Item 400-95-3, Cofferdam, Each. The Total Estimated Horizontal Plan Length Of Cofferdam Is 964 Ft. See Sheet W-1, Note 23 For Temporary Cofferdam Cut Off Requirements.

REVISIONS

Date	By	Description	Date	By	Description

	Names	Dates
Drawn by	JLA/JJS	3/96
Checked by	MKA	3/96
Designed by	MKA	3/96
Checked by	PM	3/96
Approved by	Peeter Mannik, P.E.	

ENGINEER OF RECORD:
DYER, RIDDLE, MILLS AND PRECOURT, INC.
1505 EAST COLONIAL DRIVE
ORLANDO, FLORIDA 32803

LOGO: DRMP

SEAL: 3/4/98

FLORIDA DEPARTMENT OF TRANSPORTATION
STRUCTURES DESIGN OFFICE

ROAD NO.	COUNTY	PROJECT NO.
SR414	SEMINOLE	77002-3503

SHEET TITLE: GENERAL NOTES
PROJECT NAME: MAITLAND BOULEVARD
Drawing No.
Index No.

JS/JS02/24/98 1:27PM M:\000BR\RET\MAINOTE.DWG

FED. ROAD DIV. NO.	STATE	PROJECT NO.	FISCAL YEAR	SHEET NO.
3	FLA.		98	A-3

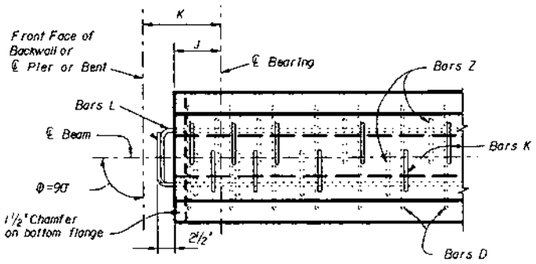

CASE 1

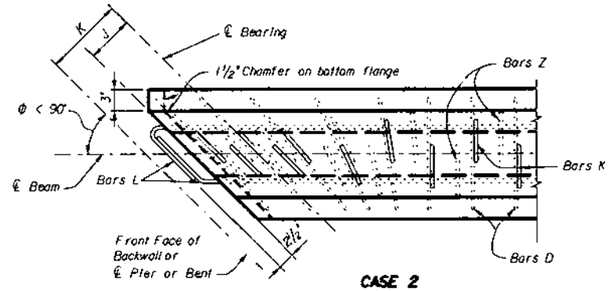

CASE 2
(See Note)

PLAN ENDS OF BEAMS

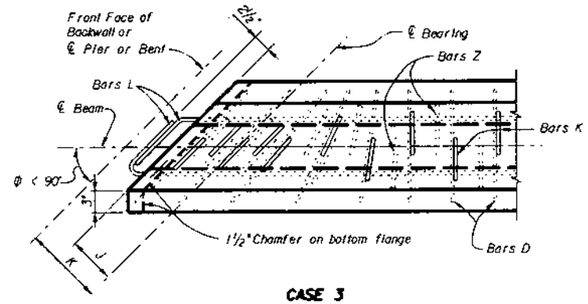

CASE 3
(See Note)

Note: For both Plan Views Case 2 and Case 3, the first Bar Z and the first two Bars K shall be placed parallel to the skewed end of the Beam. The remainder of the Bars Z & K shall be placed so as to transition from the skewed end to an axis perpendicular to the centerline of the beam. Bars D in the bottom flange shall be rotated along with Bars Z & K. Bar spacing may not agree with Beam Sheets.

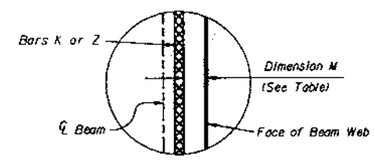

SECTION THRU BEAM WEB
(Showing Concrete Cover)

TABLE OF DIMENSIONS M	
BEAM TYPE	DIMENSION M
II	2"
III	2½"
IV	3"

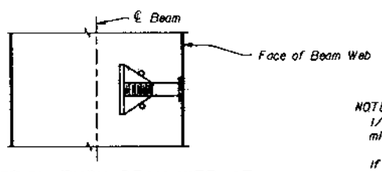

SECTION THRU BEAM WEB AT INSERT FOR PIPE HANGER ATTACHMENT

NOTE: Insert shall be 1"Φ, zinc-electroplated, ferrule wing nut, UNC threads. 1/0 minimum gage wire, not more than 4" in depth and shall have a minimum ultimate tensile strength of 11,400 lbs. in 4000 psi concrete.

If inserts are needed on both sides of web an assembly as long as the the thickness of the web, consisting of two (2) Ferrule Inserts attached by two (2) or more struts may be utilized. The connecting struts shall have a minimum ultimate tensile strength of 22,800 lbs. .

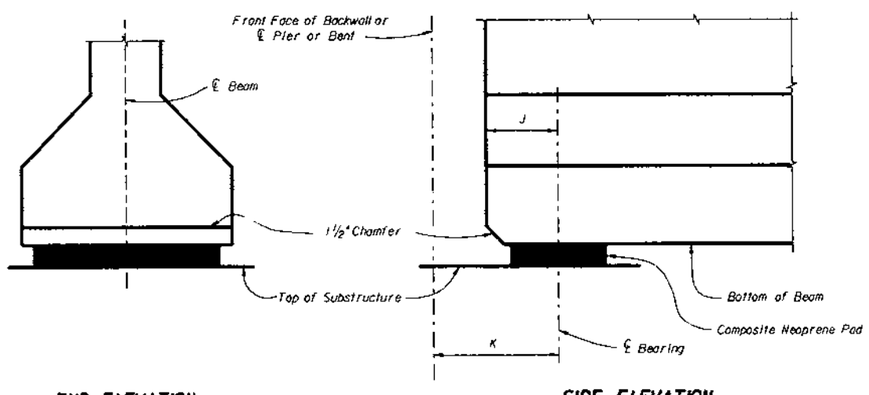

END ELEVATION
(Perpendicular to ℄ Beam)

SIDE ELEVATION
(Perpendicular To ℄ Bearing)

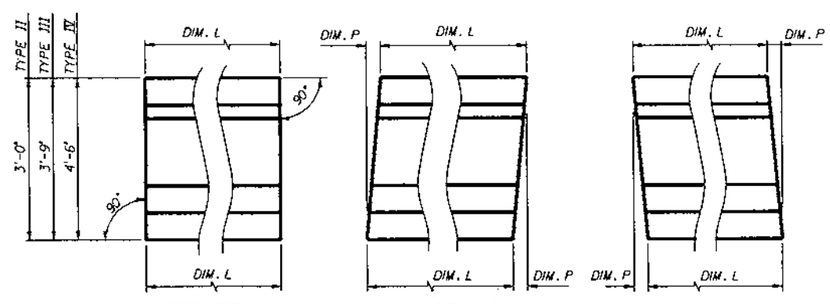

CONDITION 1
(P = 0'-0")

CONDITION 2

CONDITION 3

END ELEVATIONS OF BEAMS
(Showing Vertical Bevel of Beam End)

BEAM NOTES

MORTAR LEAKAGE: Any mortar leakage that occurs and stains resulting from leakage shall be removed so that beams have a uniform appearance.

STRANDS: At the option of the Contractor, other types, sizes and/or configurations of strands may be used in lieu of the stranding shown on these sheets. Calculations shall be submitted showing the substitution meets the following requirements:

1. The strands meet all the requirements of ASTM A416 for the grade of strands proposed.
2. The net compressive stress in the concrete due to prestressing acting alone, after all losses, is not less than that provided by the stranding shown on these sheets.
3. The ultimate strength of the structure with the proposed stranding is not less than the ultimate strength of the original design.
4. The proposed stranding complies in all respects with the Department's Structures Design Guidelines.

FINISH: The top surface of the beam shall be rough floated and then scrubbed transversely with a coarse wire brush to remove all laitance and to produce a roughened surface for bonding. All beams shall receive a Class 3 surface finish.

SUBMITTALS: The Specifications stipulate the conditions for which Shop Drawings are not required. If each and every condition cannot be met, then a formal Shop Drawing submittal is required. Supplemental reinforcing provided by the Contractor to facilitate fabrication of prestressed beams do not require Shop Drawings.

STRAND DETENSIONING: Strand detensioning shall be based upon the following priority, from first to last:

1. Top dormant strands (Bars N)
2. Fully bonded strands
3. Partially debonded (shielded) strands

FORMS AND PALLETS: All beams shall be cast on concrete based pallets and in metal forms.

HANDLING: In the handling of beams, they must be maintained in an upright position at all times and must be picked up from points located a maximum distance of 3 ft. from the ends of the beam.

STORAGE AND TRANSPORTATION: Beams shall be stored on adequate dunnage and supported during transit within 18" from ends of beam.

STRAND EXTENSION: All strands shall extend 2½" beyond ends of beams.

CONCRETE: Refer to Table of Beam Variables on the individual beam sheets for the class of concrete, 28-day strength (f'c) and cylinder strength at transfer of the tensioning load (f'ci).

REINFORCING STEEL: All reinforcing steel shall be ASTM A615 Grade 60.

BEARING PADS: The cost of installing bearing pads shall be included in the contract unit price of prestressed beams. The composite neoprene pads may or may not be furnished to the contractor by FDOT. See the General Notes for the bridge, or the Bid Item Notes, for additional information regarding who the pads provider will be.

MISCELLANEOUS: The cost of inserts for pipe hanger attachment shall be included in the contract unit prices for prestressed beams.

NOTES: Work this sheet with individual beam sheets, Type II, III and IV only.

See "TABLE OF BEAM VARIABLES" on individual beam sheets for angle "Φ's and dimensions "J", "K", "L" and "P".

For beams with vertically bevelled ends, such as conditions 2 & 3, the first Bar K shall be placed parallel to the end bevel. Adjacent Bars Z and K shall be placed so as to transition from the end bevel to a vertical axis. The spacing of Bars K and Z shown shall apply along the top flange of the beam and the spacing along the bottom of the beam shall be adjusted by not more than ½" (±) until the vertical position is attained.

REVISIONS					
Date	By	Description	Date	By	Description
			94R		

	Names	Dates
Drawn by	JJS	3/96
Checked by	MKA	3/96
Designed by	MKA	3/96
Checked by	MN	3/96
Approved by	Peeter Mannik, P.E.	

ENGINEER OF RECORD: DYER, RIDDLE, MILLS AND PRECOURT, INC. 1000 EAST COLONIAL DRIVE ORLANDO, FLORIDA 32803

LOGO: DRMP DYER, RIDDLE, MILLS & PRECOURT, INC. ENGINEERS · SURVEYORS

SEAL: Peter Mannik 3/4/96

FLORIDA DEPARTMENT OF TRANSPORTATION
STRUCTURES DESIGN OFFICE

ROAD NO.	COUNTY	PROJECT NO.
S.R. 414	SEMINOLE	77002-3503

SHEET TITLE: TYPICAL NOTES AND DETAILS FOR AASHTO TYPE II, III AND IV PRESTRESSED BEAMS

PROJECT NAME: MAITLAND BOULEVARD

Drawing No. 1 of 1

Index No.

MAITIOO.DGN

FED. ROAD DIV. NO.	STATE	PROJECT NO.	FISCAL YEAR	SHEET NO.
3	FLA.			A-4

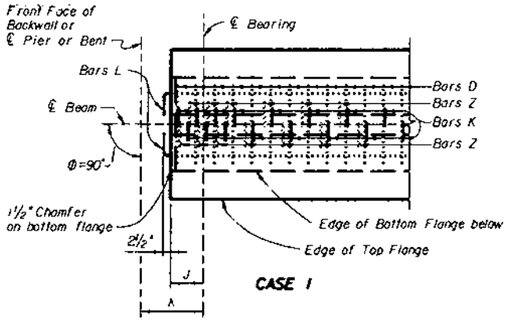

PLAN ENDS OF BEAMS

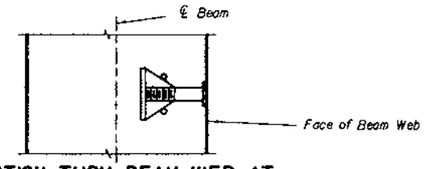

SECTION THRU BEAM WEB AT INSERT FOR PIPE HANGER ATTACHMENT

NOTE: Insert shall be 1"Φ, zinc-electroplated, ferrule wing nut, UNC threads, 1/0 minimum gage wire, not more than 4" in depth and shall have a minimum ultimate tensile strength of 11,400 lbs. in 4,000 p.s.i. concrete.

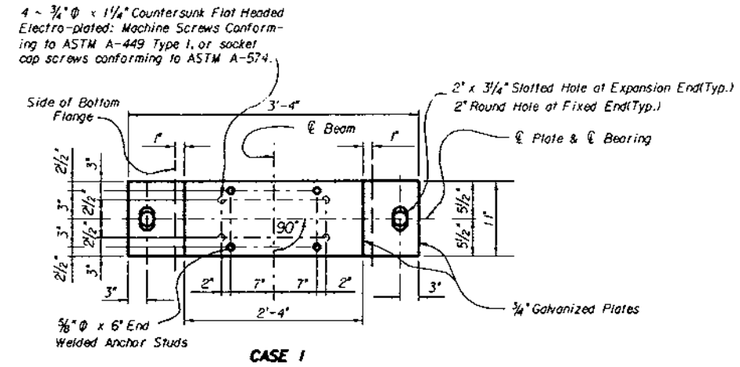

BEARING PLATE DETAILS

NOTE: Bearing Plates Required On All Beams. See The Plan And Elevation Sheet For Location Of Fixed And Expansion Beam Ends.

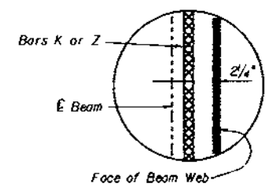

SECTION THRU BEAM WEB

(Showing Cover on Stirrups)

BEAM NOTES

MORTAR LEAKAGE: Any mortar leakage that occurs and stains resulting from leakage shall be removed so that beams have a uniform appearance.

STRANDS: At the option of the Contractor, other types, sizes and/or configurations of strands may be used in lieu of the stranding shown on these sheets. Calculations shall be submitted showing the substitution meets the following requirements:

1. The strands meet all the requirements of ASTM-A416 for the grade
2. The net compressive stress in the concrete due to prestressing acting alone, after all losses, is at least as large as that provided by the stranding shown on these sheets.
3. The ultimate strength of the structure with the proposed stranding is at least equal to the ultimate strength of the original design.
4. The proposed stranding complies in all respects with the Department's Structures Design Guidelines.

FINISH: The top surface of the beam shall be rough floated and then scrubbed transversely with a coarse wire brush to remove all laitance and to produce a roughened surface for bonding. All beams shall receive a Class 3 surface finish.

SUBMITTALS: The Specifications stipulate the conditions for which Shop Drawings are not required. If each and every condition can not be met, then a formal Shop Drawing submittal is required. Supplemental reinforcing provided by the Contractor to facilitate fabrication of prestressed beams do not require Shop Drawings.

STRAND DETENSIONING: Strand detensioning shall be based upon the following priority, from first to last:

1. Top dormant strands (Bars N)
2. Fully bonded strands
3. Partially debonded (shielded) strands

FORMS AND PALLETS: All beams shall be cast on concrete based pallets and in metal forms.

HANDLING: In the handling of beams, they must be maintained in an upright position at all times and must be picked up from points located a maximum distance of 3 ft. from the ends of the beam.

STORAGE AND TRANSPORTATION: Beams shall be stored on adequate dunnage and supported during transit within 18" from ends of beam.

STRAND EXTENSION: All strands shall extend 2½" beyond ends of beams.

CONCRETE: Refer to Table of Beam Variables on the individual beam sheets for the class of concrete, 28-day strength (f'c) and cylinder strength at transfer of the tensioning load (f'ci).

REINFORCING STEEL: All reinforcing steel shall be ASTM A615, Grade 60.

BEARING PADS: The cost of installing bearing pads shall be included in the contract unit price of prestressed beams. The composite neoprene pads may or may not be furnished to the contractor by FDOT. See the General Notes for the bridge, or the Bid Item Notes, for additional information regarding who the pads provider will be.

MISCELLANEOUS: Bearing plates (for concrete beams only), anchor bolts, nuts and washers shall be hot dip galvanized in accordance with requirements of A.S.T.M. Specification A123 or A153. Bearing plates shall conform to A.S.T.M. Specification A709, Grade 36. Anchor bolts shall conform to AASHTO M 314 Grade 55. The cost of bearing plates, anchor bolts, nuts, washers, premoulded expansion material at bearings and inserts for pipe hanger attachment shall be included in the contract unit prices for prestressed beams.

NOTES: Work this sheet with individual beam sheets, Bulb-T 72.

See "TABLE OF BEAM VARIABLES" on individual beam sheets for angle "Φ"s and dimensions "J", "K", "L" and "P".

For beams with vertically bevelled ends, such as conditions 2 & 3, the first Bar K shall be placed parallel to the end bevel. Adjacent Bars Z and K shall be placed so as to transition from an axis parallel to the end bevel to a vertical axis. The spacing of Bars K and Z shown shall apply along the top flange of the beam and the spacing along the bottom of the beam shall be adjusted by not more than ½ inch (±) until the vertical position is attained.

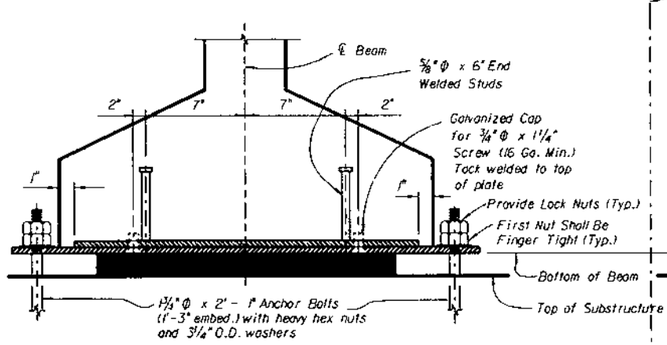

END ELEVATION-SECTION OF BEARING ASSEMBLY

(Perpendicular to ℄ Beam)

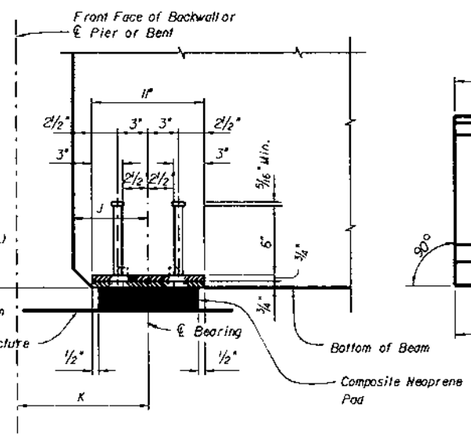

SIDE ELEVATION-SECTION OF BEARING ASSEMBLY

(Perpendicular To ℄ Bearing)

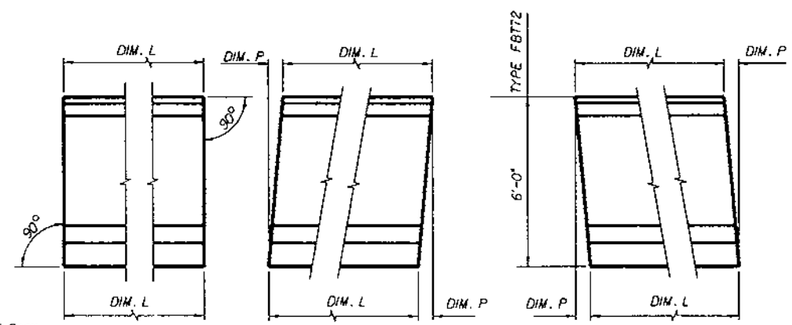

CONDITION 1 (P = 0'-0")

CONDITION 2

CONDITION 3

END ELEVATIONS OF BEAMS

(Showing Vertical Bevel of Beam End)

REVISIONS					
Date	By	Description	Date	By	Description
			94R		

	Names	Dates
Drawn by	JLA	3/96
Checked by	MN	3/96
Designed by	MN	3/96
Checked by	MKA	3/96
Approved by	Peeter Mannik, P.E.	

ENGINEER OF RECORD: DYER, RIDDLE, MILLS AND PRECOURT, INC. 1905 EAST COLONIAL DRIVE ORLANDO, FLORIDA 32803

LOGO: DRMP DYER, RIDDLE, MILLS & PRECOURT, INC. ENGINEERS · SURVEYORS

SEAL: Peeter Mannik 3/4/98

FLORIDA DEPARTMENT OF TRANSPORTATION
STRUCTURES DESIGN OFFICE

ROAD NO.	COUNTY	PROJECT NO.
SR414	SEMINOLE	77002-3503

SHEET TITLE: TYPICAL NOTES AND DETAILS FOR FLORIDA BULB-T 72 PRESTRESSED BEAMS

PROJECT NAME: MAITLAND BOULEVARD

Drawing No. 1 of 1

Index No.

MODIFIED . DGN

FED. ROAD DIV. NO.	STATE	PROJECT NO	FISCAL YEAR	SHEET NO.
3	FLA.		98	A-5

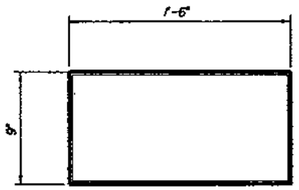

PLAN

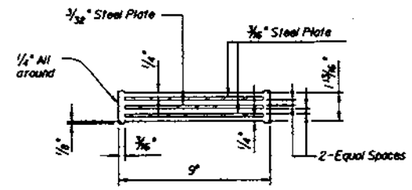

TYPICAL SECTION

COMPOSITE PAD
TYPE IV

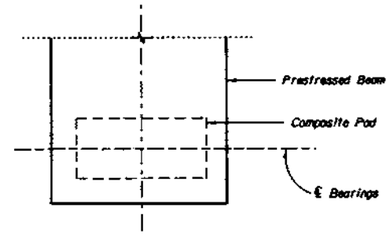

STRAIGHT BRIDGE

PART PLAN

BEARING PAD NOTES

Neoprene in all Bearing Pads shall have a Grade 50 durometer hardness.

Steel Plates in composite pads shall conform to ASTM A36 or ASTM A570 Grade 36.

Variations in pad dimensions will be allowed provided revised pads will meet the current specifications and are approved by the Engineer.

Bearing seat shall be finished parallel to the bottom of Beam.

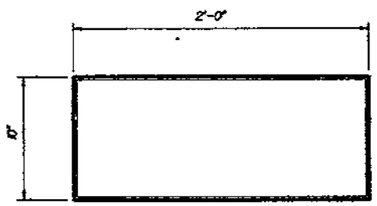

PLAN

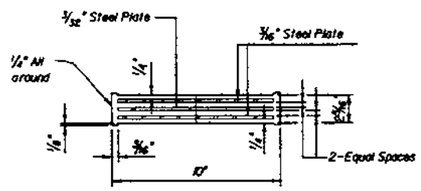

TYPICAL SECTION

COMPOSITE PAD
TYPE V
MODIFIED

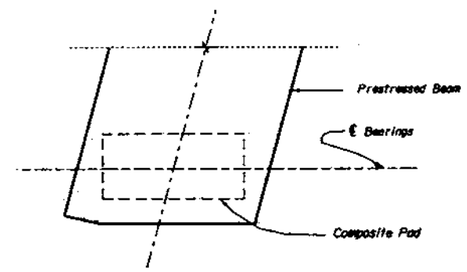

SKEWED BRIDGE

PART PLAN

BEARING PAD LOCATION			
BRIDGE	TYPE	BEAM MARK	NO. OF PADS
LITTLE WEKIVA RIVER	IV	B-1 THRU B-11	22
LAKE BOSSE	V MOD.	B-1 THRU B-22 B-34 THRU B-66	110
LAKE BOSSE	*	G-23 THRU G-33	22

* SEE SHEET B-47 FOR DETAILS

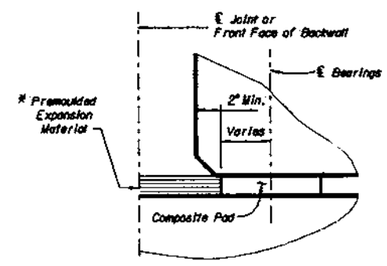

TYPICAL PAD DETAIL

PART ELEVATION

* Premoulded Expansion Material is required for Cast-In-Place Beam Extension.

REVISIONS					
Date	By	Description	Date	By	Description
			94R		

	Names	Dates
Drawn by	JLA	3/96
Checked by	MN	3/96
Designed by	MN	3/96
Checked by	MKA	3/96
Approved by	Peeter Mannik, P.E.	

ENGINEER OF RECORD:
DYER, RIDDLE, MILLS AND PRECOURT, INC.
1005 EAST COLONIAL DRIVE
ORLANDO, FLORIDA 32803

LOGO: DRMP
DYER, RIDDLE, MILLS & PRECOURT, INC.
ENGINEERS · SURVEYORS

SEAL: Peeter Mannik 3/4/98

FLORIDA DEPARTMENT OF TRANSPORTATION
STRUCTURES DESIGN OFFICE

ROAD NO.	COUNTY	PROJECT NO.
S.R. 414	SEMINOLE	77002-3503

SHEET TITLE: COMPOSITE NEOPRENE BEARING PADS

PROJECT NAME: MAITLAND BOULEVARD

Drawing No. 1 of 1

Index No.

MCD...DGN

FED. ROAD DIV. NO.	STATE	PROJECT NO.	FISCAL YEAR	SHEET NO.
3	FLA.		98	A-6

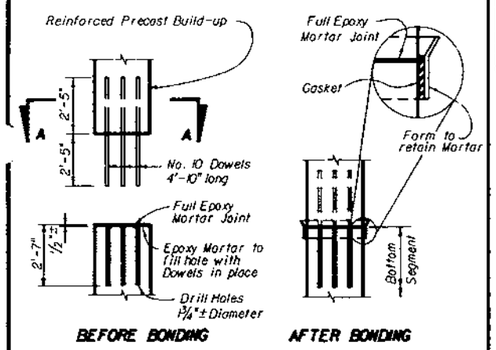

NOTE: Dowels shown for 24" Pile. See Sect. A-A for spacing and number of Dowels for each Pile.

REINFORCED PRECAST SPLICES
(Extensions 2' Min. but less than 5') (Not Drivable)

NOTE: The reinforced precast Build-up shall conform with the Specifications and Section A-A. Spiral ties pitch shall be 6" Max.

TABLE OF BONDED SPLICE DATA

Drivable Splice	Min. Splice Length	No. 10 Dowel Length
YES	10'-0"	7'-5"
NO *	5'-0"	4'-10"

* For Splices less than 5'-0" (not Drivable), use the Reinforced Precast Splice.

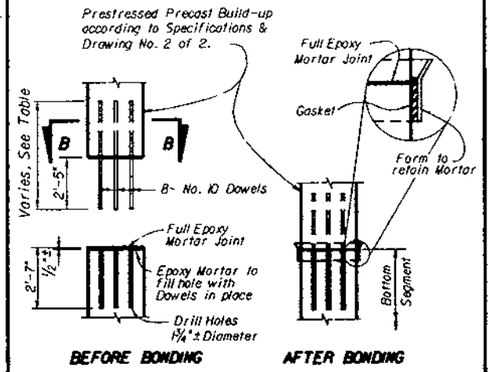

NOTE: Dowels shown for 24" Pile. See SECTION B-B for spacing & Number of Dowels for each Pile.

PRESTRESSED PRECAST SPLICES
(Extensions 5' or longer)

DETAILS FOR REINFORCED PRECAST & PRESTRESSED PRECAST PILE SPLICES

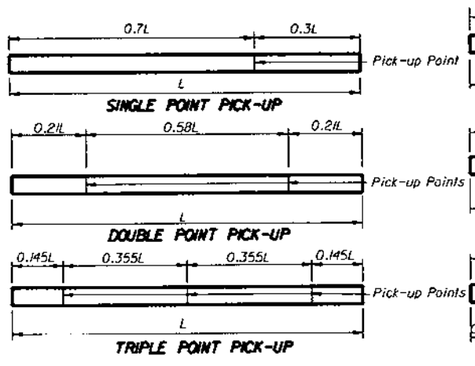

PILE PICK-UP DETAILS

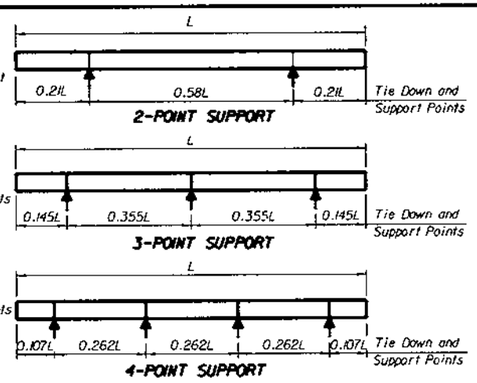

STORAGE AND TRANSPORTATION SUPPORT DETAILS

PILE SIZE	MAX. LENGTH "L" FOR PICK-UP		
	SINGLE POINT	DOUBLE POINT	TRIPLE POINT
12"	50'	70'	L > 70'
14"	55'	75'	L > 75'
18"	60'	90'	L > 90'
20"	65'	95'	L > 95'
24"	70'	100'	L > 100'
30"	90'	125'	L > 125'

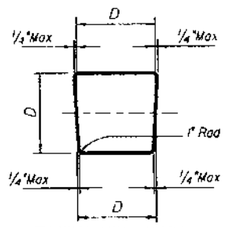

TYPICAL PILE SHAPE FOR MOLD FORMS

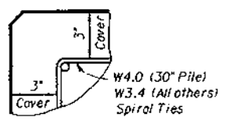

TYPICAL DETAIL SHOWING COVER DIMENSION

* For actual prestressing strand pattern, see Drawing 2 of 2.

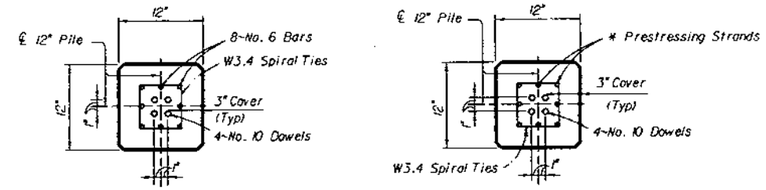

SECTION A-A
(See Reinf. Precast Splice Detail)

SECTION B-B
(See Prstr. Precast Splice Detail)

12" PILE

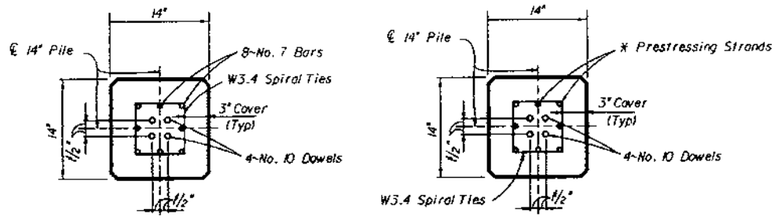

SECTION A-A
(See Reinf. Precast Splice Detail)

SECTION B-B
(See Prstr. Precast Splice Detail)

14" PILE

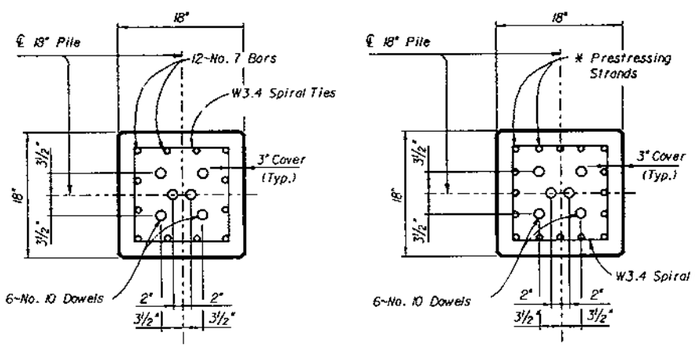

SECTION A-A
(See Reinf. Precast Splice Detail)

SECTION B-B
(See Prstr. Precast Splice Detail)

18" PILE

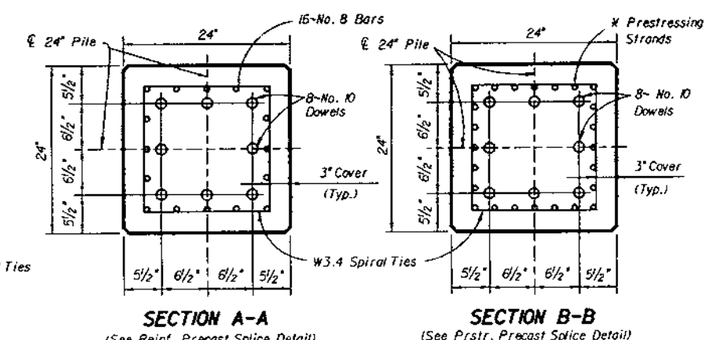

SECTION A-A
(See Reinf. Precast Splice Detail)

SECTION B-B
(See Prstr. Precast Splice Detail)

24" PILE

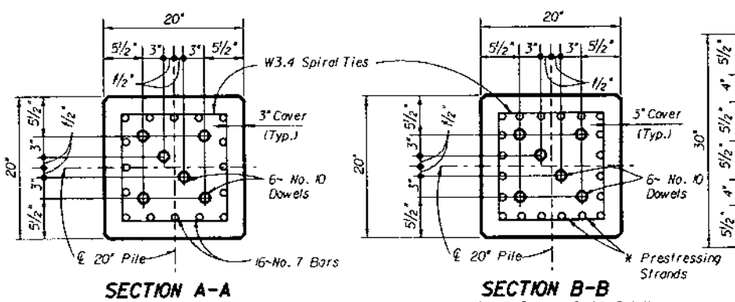

SECTION A-A
(See Reinf. Precast Splice Detail)

SECTION B-B
(See Prstr. Precast Splice Detail)

20" PILE

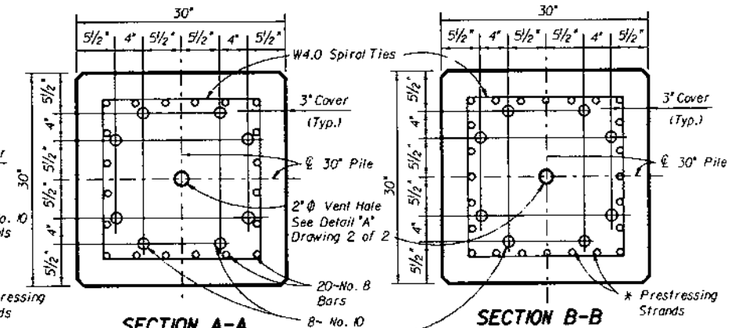

SECTION A-A
(See Reinf. Precast Splice Detail)

SECTION B-B
(See Prstr. Precast Splice Detail)

30" PILE

PILE NOTES

SPIRAL TIES: Each wrap of spirals shall be tied to at least two corner strands or bars. One turn required for spiral splices. Spirals shall be manufactured from cold-drawn steel wire meeting the requirements of ASTM A 82.

PILE CUT OFF: Piles required to be cut off shall be sawcut at the pile cut off elevation shown on the plans with an abrasive saw. Unless otherwise noted on the plans, the cut shall be made to the depth into the pile necessary to cleanly cut through the prestressing strands.

CONCRETE CLASS: Concrete for all piles shall be Class V (Special). Class V (Special) Concrete shall conform to all requirements for Class V Concrete except for the 28-day strength as noted below.

CONCRETE STRENGTH: The cylinder strength shall be 6,000 p.s.i. minimum at 28 days and 4,000 p.s.i. minimum at transfer of the Prestressing Force.

SPLICED PILES: Piles may be spliced in accordance with Section 455-5.12 of the specifications. Precast buildups shall be prestressed or reinforced according to pile details for the "head" section of the pile shown on this Standard. Drivable spliced piles may be driven after splice is two days old.

PICK-UP POINTS: Piles shall be marked at the pick-up points to indicate proper points for attaching handling lines.

STORAGE AND TRANSPORTATION: Piles shall be supported an adequate dunnage both in the precasting yard and at the jobsite and shall be supported and tied down during transit in accordance with the following schedule:

Type Pickup Required by Pile Length	Type Storage and Transportation Support Detail
Single or Double	2, 3 or 4 Point Support
Triple	3 or 4 Point Support

REINFORCING STEEL: All Reinforcing Steel except spiral ties shall be ASTM A 615, Grade 60.

STRAND NOMENCLATURE:
S.R. = Stress Relieved Strand
L.R.S. = Low-Relaxation Strand
1/2" Φ (Spec.): A_s = 0.167 in^2
9/16" Φ (Spec.): A_s = 0.196 in^2

REVISIONS					
Date	By	Description	Date	By	Description
			94R		

	Names	Dates
Drawn by	TGA	1-91
Checked by	AJG	5-91
Designed by		
Checked by		
Approved by	NICHOLS/AJG	

ENGINEER OF RECORD:
STRUCTURES DESIGN OFFICE
CENTRAL OFFICE
605 Suwannee Street, MS 33
Tallahassee, Florida 32399-0450

LOGO:
DYER, RIDDLE, MILLS AND PRECOURT, INC.
ENGINEERS - SURVEYORS
1605 EAST COLONIAL DRIVE
ORLANDO, FLORIDA 32803

SEAL:

FLORIDA DEPARTMENT OF TRANSPORTATION
STRUCTURES DESIGN OFFICE

ROAD NO.	COUNTY	PROJECT NO.
S.R. 414	SEMINOLE	77002-3503

SHEET TITLE: 12", 14", 18", 20", 24", AND 30" PRESTRESSED CONCRETE PILES

PROJECT NAME: MAITLAND BOULEVARD

Drawing No. 1 of 2

Index No. 600

MAITL600A.DGN

FED. ROAD DIV. NO.	STATE	PROJECT NO.	FISCAL YEAR	SHEET NO.
3	FLA.		98	A-7

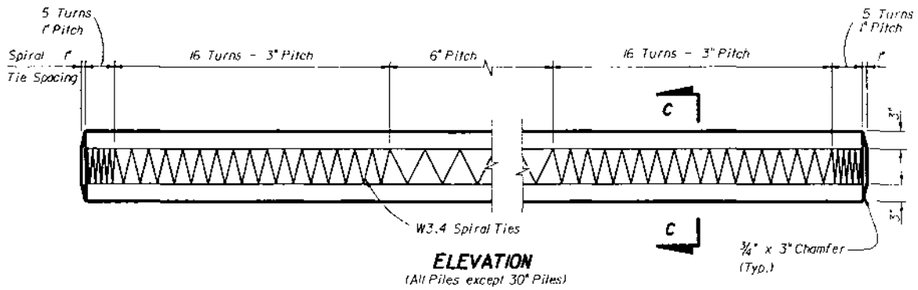

ELEVATION
(All Piles except 30" Piles)

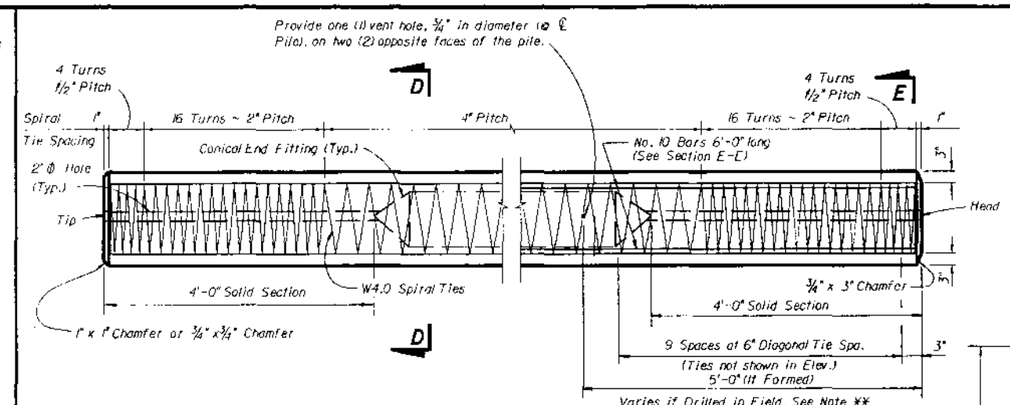

ELEVATION
(30" Piles)

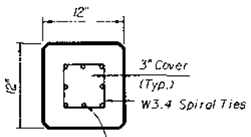

ALTERNATE STRAND PATTERN ***

8 ~ 7/16"Φ, Grade 270 L.R.S. at 21,700# each
8 ~ 1/2"Φ, Grade 250 S.R. at 24,100# each
12 ~ 3/8"Φ, Grade 270 L.R.S. at 14,800# each
12 ~ 3/8"Φ, Grade 270 S.R. at 15,600# each

SECTION C-C
12" PILE

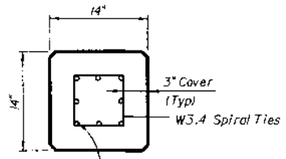

ALTERNATE STRAND PATTERN ***

8 ~ 1/2"Φ, Grade 270 (Spec.)L.R.S. at 30,000# each
8 ~ 1/2"Φ, Grade 270 (Spec.)S.R. at 31,570# each
8 ~ 1/2"Φ, Grade 270 L.R.S. at 29,500# each
12 ~ 7/16"Φ, Grade 270 S.R. at 21,200# each
12 ~ 1/2"Φ, Grade 250 S.R. at 22,600# each
16 ~ 3/8"Φ, Grade 270 S.R. at 16,070# each

SECTION C-C
14" PILE

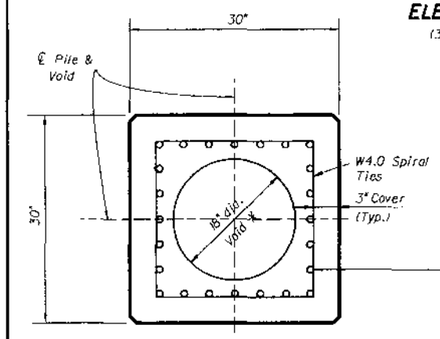

* Omit Void at Ends, see Elevation View

SECTION D-D
30" PILE

ALTERNATE STRAND PATTERN ***

20 ~ 9/16"Φ, Grade 270 (Spec.)L.R.S. at 38,600# each
20 ~ 9/16"Φ, Grade 270 L.R.S. at 38,880# each
24 ~ 1/2"Φ, Grade 270 (Spec.)L.R.S. at 32,300# each
24 ~ 9/16"Φ, Grade 270 S.R. at 35,000# each
24 ~ 9/16"Φ, Grade 270 (Spec.)S.R. at 35,200# each
28 ~ 1/2"Φ, Grade 270 L.R.S. at 28,100# each
28 ~ 1/2"Φ, Grade 270 (Spec.)S.R. at 30,200# each

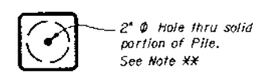

DETAIL "A"

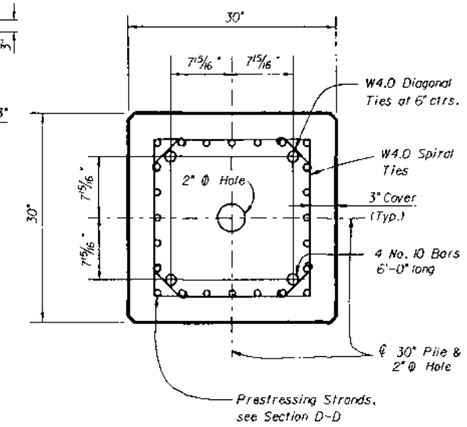

SECTION E-E
30" PILE

** NOTE:
The 18" Φ Void in the pile shall be positively vented to water or air after the final pile installation. If the 3/4" Φ vents are included in the pile cut-off section, two (2) new holes, 3/4" in diameter , shall be drilled on two (2) opposite faces of the pile below the bottom of substructure elevation. If the pile void can not be vented directly to water or air, then venting shall be provided by the use of a 1" Φ P.V.C. conduit through the 2" Φ hole(s) or the the 18" Φ void to the outside. This might involve venting through a substructure cap or column. Voids between segments of spliced piles shall be connected by 2" Φ hole(s). See Detail "A".

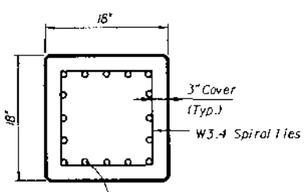

ALTERNATE STRAND PATTERN ***

12 ~ 1/2"Φ, Grade 270 (Spec.)L.R.S. at 32,400# each
12 ~ 9/16"Φ, Grade 270 S.R. at 35,100# each
16 ~ 1/2"Φ, Grade 270 S.R. at 26,800# each
20 ~ 7/16"Φ, Grade 270 L.R.S. at 20,000# each
20 ~ 7/16"Φ, Grade 270 S.R. at 21,100# each
24 ~ 3/8"Φ, Grade 270 L.R.S. at 16,300# each

SECTION C-C
18" PILE

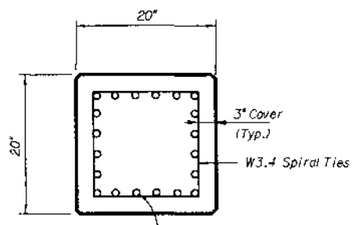

ALTERNATE STRAND PATTERN ***

16 ~ 1/2"Φ, Grade 270 L.R.S. at 30,000# each
16 ~ 1/2" Φ, Grade 270 (Spec.) S.R. at 31,570# each
20 ~ 1/2"Φ, Grade 270 S.R. at 26,500# each
24 ~ 7/16"Φ, Grade 270 L.R.S. at 20,500# each
24 ~ 7/16"Φ, Grade 270 S.R. at 21,740# each

SECTION C-C
20" PILE

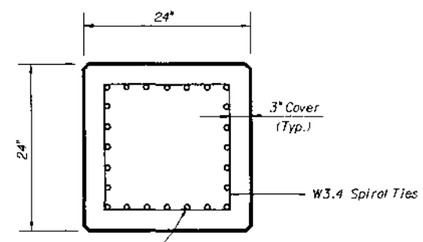

ALTERNATE STRAND PATTERN ***

20 ~ 1/2"Φ, Grade 270 (Spec.)L.R.S. at 33,820# each
20 ~ 9/16"Φ, Grade 270, S.R. 270 at 36,290# each
20 ~ 9/16"Φ, Grade 270 (Spec.)S.R. at 37,050# each
24 ~ 1/2"Φ, Grade 270 L.R.S. at 29,000# each
24 ~ 1/2"Φ, Grade 270 (Spec.)S.R. at 31,570# each

SECTION C-C
24" PILE

*** NOTE:
Any of the given Alternate Strand Patterns may be utilized. The strands shall be located as follows : place one strand at each corner and place the remaining strands equally spaced between the corner strands.
The Total strand pattern shall be concentric with the nominal concrete section of the pile.

NOTE:
CONTRACTOR OPTION: The 30" pile may be cast SOLID by omitting the 18" void, the 2" holes, and the 3/4" vent holes. In this event, the Contractor shall submit for approval calculations and a proposed strand configuration that provide net prestressing after losses equal to 1000 psi.

REVISIONS						
Date	By	Description	Date	By	Description
			94R		

	Names	Dates
Drawn by	TGA	1-91
Checked by	AJG	5-91
Designed by		
Checked by		
Approved by	NICHOLS/AJG	

ENGINEER OF RECORD:
STRUCTURES DESIGN OFFICE
CENTRAL OFFICE
605 Suwannee Street, MS 33
Tallahassee, Florida 32399-0450

LOGO:
DYER, RIDDLE, MILLS AND PRECOURT, INC.
ENGINEERS - SURVEYORS
1505 EAST COLONIAL DRIVE
ORLANDO, FLORIDA 32803

SEAL:

FLORIDA DEPARTMENT OF TRANSPORTATION
STRUCTURES DESIGN OFFICE

ROAD NO.	COUNTY	PROJECT NO.
S.R. 414	SEMINOLE	77002-3503

SHEET TITLE: 12", 14", 18", 20", 24", AND 30" PRESTRESSED CONCRETE PILES

PROJECT NAME: MAITLAND BOULEVARD

Drawing No. 2 of 2

Index No. 600

MAITBOUB.DGN

FED. ROAD DIV. NO.	STATE	PROJECT NO.	FISCAL YEAR	SHEET NO.
3	FLA.		98	A-8

(*) NOTE: See Superstructure Drawings for actual dimensions and joint orientation.

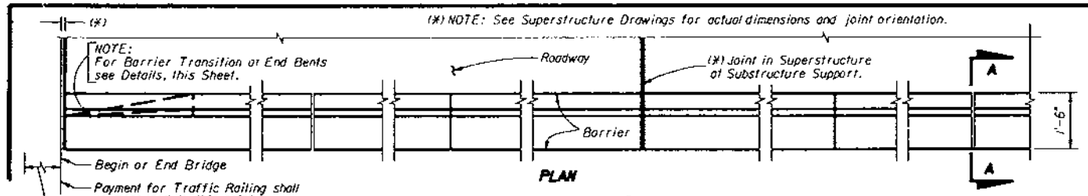

PLAN

** NOTE: 3/4" Open Joints shall be provided at:
1 - Substructure supports where superstructure slab is continuous.
2 - Midspan where span length exceeds 90 feet.
3 - Intermediate locations (equally spaced) between midspan and substructure support where span length exceeds 180 feet.

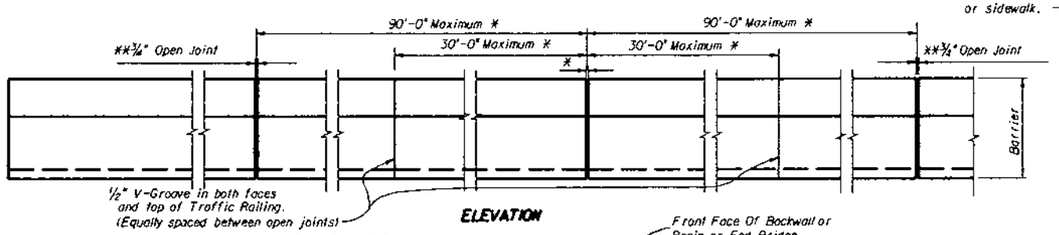

ELEVATION

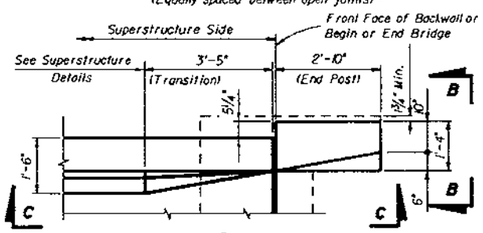

PLAN
(See Note 'A')

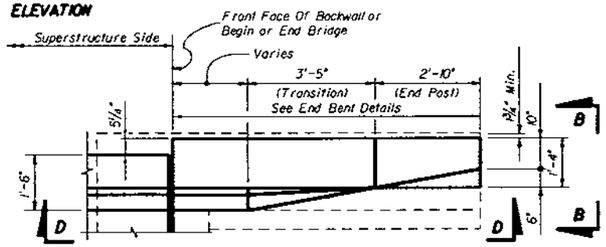

PLAN
(See Note 'B')

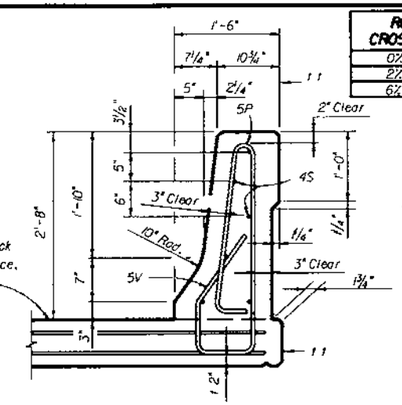

TYPICAL SECTION THRU TRAFFIC RAILING

1 For Slabs 8" thick or less. If Slab is thicker than 8" or Barrier is located on a Retaining Wall, embed Bar 5V 6".

1 1 Where Barriers of adjacent bridges are to be built back to back, the outside vertical plane of the Barrier and Slab may coincide if so shown on the Superstructure Plans.

ROADWAY CROSS-SLOPE	LOW GUTTER Ø1	LOW GUTTER Ø2	HIGH GUTTER Ø1	HIGH GUTTER Ø2
0% to 2%	90°	90°	90°	90°
2%* to 6%	93°	87°	87°	93°
6%* to 10%	96°	84°	84°	96°

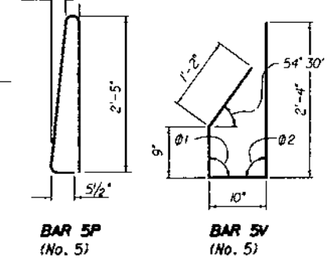

BAR 5P (No. 5)

BAR 5V (No. 5)

BENDING DIAGRAMS

BAR BENDING NOTES

1. All bar dimensions in the bending diagrams are out to out.
2. Bars 5P and 5V shall be bent around a pin diameter = 2 1/2".
3. The 9" and the 2'-4" vertical dimensions shown for Bar 5V are based on a bridge slab 8" thick or greater and without raised sidewalk or wearing surface. If the slab thickness is less than 8" decrease these dimensions by an amount equal to the difference in the thicknesses; and if a wearing surface or a raised sidewalk is to be provided, increase the dimensions by an amount equal to the wearing surface thickness or sidewalk thickness.
4. Reinforcement for Barrier on Retaining Wall shall be the same as detailed above for a 8" slab with Ø1 = Ø2 = 90°.

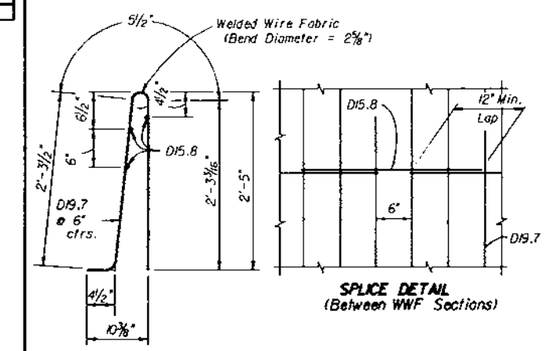

SPLICE DETAIL
(Between WWF Sections)

WELDED WIRE FABRIC

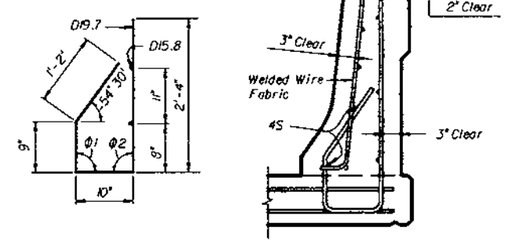

ALTERNATE REINFORCING DETAILS

The Contractor may utilize Welded Wire Fabric in lieu of all Bars 5P and 5V and Four (4) of the Bars 4S. Welded Wire Fabric shall conform to ASTM A497.

REINFORCING STEEL NOTES

Place longitudinal steel in bottom of slab as shown above to facilitate tying bars 5V. Do not add reinforcing steel for tie purposes.

All vertical reinforcing steel in Traffic Railing shall be No. 5 Bars spaced at 8" c.c. and all longitudinal reinforcing steel shall be No. 4 Bars. At all open joints all reinforcing shall have 2" minimum cover. At all construction joints Bars 4S (No. 4) may be continuous or spliced. All splices in Bars 4S shall be 1'-4" minimum.

TRAFFIC RAILING NOTES

CONCRETE AND REINFORCING STEEL: See General Notes.
PAYMENT: Traffic Railing on Bridges shall be paid for per linear foot (Item No. 400-148-1), which shall include all Concrete and Reinforcing Steel. Traffic Railing shall be measured along the centerline of the top surface of the concrete barrier.
MARKERS: Markers recording the elevation shall be placed on top of the Traffic Railing at End Bents. On bridges longer than 100 ft. one marker shall be placed at each end of the bridge. On bridges 100 ft or less, one marker shall be placed at one end of the bridge only. Markers are to be furnished by the Florida Department of Transportation and installed by the Contractor. The cost of installing the markers shall be included in the Contract Unit Price for Traffic Railing (Barrier).
TRAFFIC RAIL CONSTRUCTION: The contractor may construct the railing by the use of stationary removable forms or by the use of slip forms without altering the rail dimensions shown above.
SUPERELEVATED BRIDGES: At the option of the Contractor, Traffic Railing and End Bent Wing Posts on superelevated bridges, may be constructed perpendicular to the roadway surface. The cost of modifications shall be at the Contractor's expense.
BOLTS: Bolts, Nuts, and Washers shall be hot dip galvanized in accordance with ASTM A153.
RETAINING WALL: If the Barrier is to be provided on a retaining wall, the Barrier Section shall be as shown above. Other details such as transition for guardrail attachment, maximum spacing of 3/4" open joint and 1/2" V-Groove shall also apply. See Wall Plans for Payment.
NAME AND BRIDGE NUMBER: The Name and Bridge Number to be placed on the Traffic Railing shall be seen on the driver's right when approaching bridge. The date is to be placed on the driver's left when approaching the bridge. The date shall be the year the bridge is constructed. Black plastic letters and figures 3" in height, as approved by the Engineer, may be used, in lieu of letters and figures formed by 3/8" V-Grooves. V-Grooves shall be formed by preformed letters and figures.

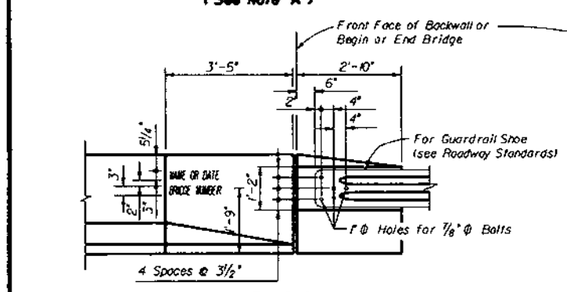

VIEW C-C

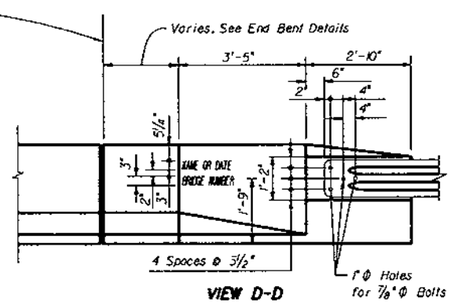

VIEW D-D

NOTE 'A':
If Barrier Transition is required and the Superstructure Depth (thickness) is 25" or less, the Transition shall be provided on the Superstructure side. To accommodate the Transition on the Superstructure the Reinforcement (Bars 5V, 5P & 4S) will need adjusting. The 1'-2" portion of Bars 5V shall be bent to fit and the horizontal 10" portion along the bottom shall be cut at the center.

NOTE 'B':
If Barrier Transition is required and the Superstructure Depth (thickness) exceeds 25 ", the Barrier Transition shall be provided on the End Bent side.

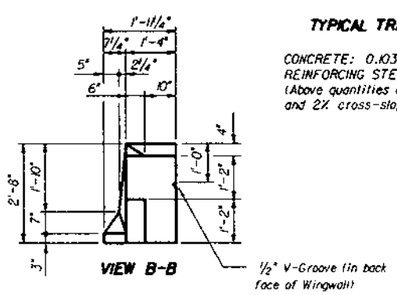

VIEW B-B

TYPICAL TRAFFIC RAILING QUANTITIES

CONCRETE: 0.103 c.y. per linear foot
REINFORCING STEEL: 20.49 lbs per linear foot
(Above quantities are based on 8" slab and 2% cross-slope).

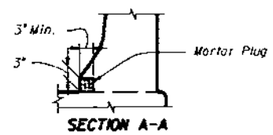

SECTION A-A

NOTE: When open joint in Barrier is not coincident with joint in the superstructure, the lower 3" portion of the open joint shall be plugged by filling with mortar in accordance with Article 400-15.1.

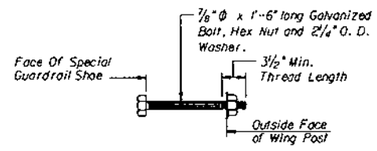

BOLT DETAIL

NOTE: The Cost of Bolts is to be included in the Contract Unit Price for Guardrail

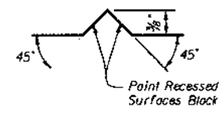

SECTION THRU RECESSED "V" GROOVE TO FORM INSCRIBED LETTERS AND FIGURES

REVISIONS					
Date	By	Description	Date	By	Description
			94R		

	Names	Dates
Drawn by	WEH	2-89
Checked by	AJG	2-89
Designed by		
Checked by		
Approved by	AJG	

ENGINEER OF RECORD:
STRUCTURES DESIGN OFFICE
605 Suwannee Street, MS 33
Tallahassee, Florida 32399-0450

LOGO:
DYER, RIDDLE, MILLS AND PRECOURT, INC.
ENGINEERS - SURVEYORS
1505 EAST COLONIAL DRIVE
ORLANDO, FLORIDA 32803

SEAL:

FLORIDA DEPARTMENT OF TRANSPORTATION
STRUCTURES DESIGN OFFICE

ROAD NO.	COUNTY	PROJECT NO.
S.R. 414	SEMINOLE	77002-3503

SHEET TITLE: TRAFFIC RAILING BARRIER

Drawing No. 1 of 1

PROJECT NAME: MAITLAND BOULEVARD

Index No. 700

MAITTOO.DGN

FED. ROAD DIV. NO.	STATE	PROJECT NO.	FISCAL YEAR	SHEET NO.
3	FLA.		98	A-9

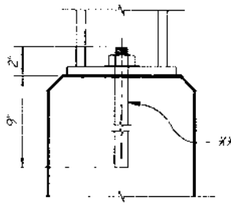

- ** 2 - 3/4"Φ x 11" Adhesive Anchor Bolts with hex nuts and washers set in 7/8" Φ holes filled with Epoxy Bonding Compound (Qualified Products List Class IV) in accordance with the manufacturer's specifications.

DETAIL 'A'

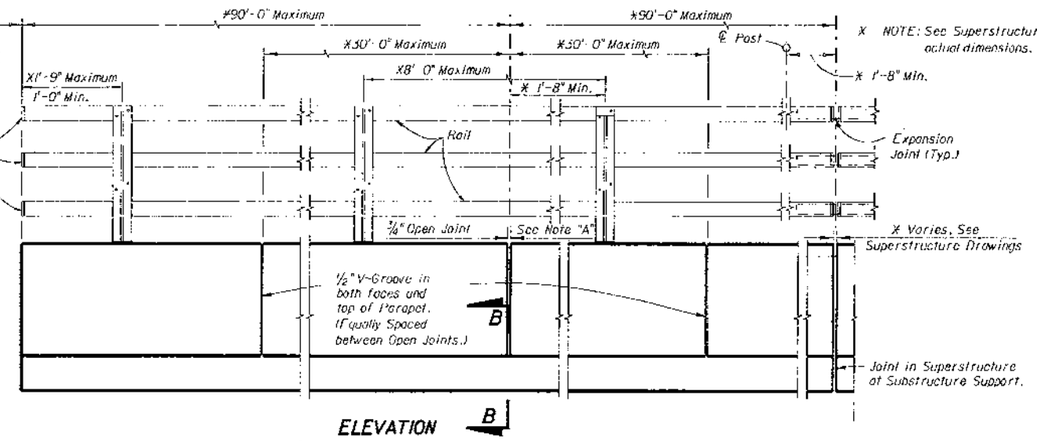

* NOTE: See Superstructure Drawing for actual dimensions.

ELEVATION B

Note "A": 3/4" Open Joints shall be provided at:

1. Substructure Supports where Superstructure Slab is continuous.
2. Mid-Span where Span length exceeds 90 feet.
3. Intermediate locations (equally spaced) between Mid-Span and Superstructure Support where Span length exceeds 180 feet.
4. Locations Coinciding with joints for the Traffic Railing Barrier.

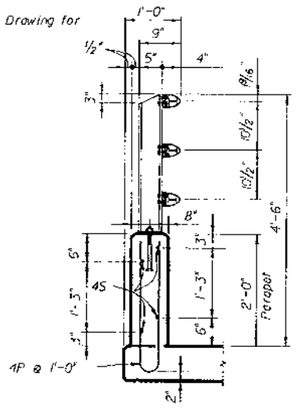

TYPICAL SECTION THRU PARAPET AND RAIL

Note: Bars 4P and 4S are No. 4 Bars.

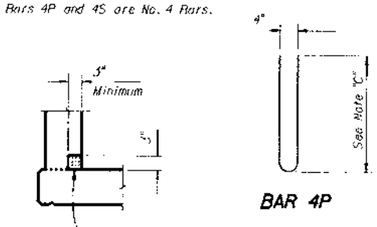

BAR 4P

- Plug Open Joint with mortar in accordance with Article 400-15.1 to prevent water leakage.

SECTION B-B

Note "C": Designer shall fully detail reinforcement in Parapet in the Superstructure Drawings and include concrete and reinforcing steel in the Superstructure quantities.

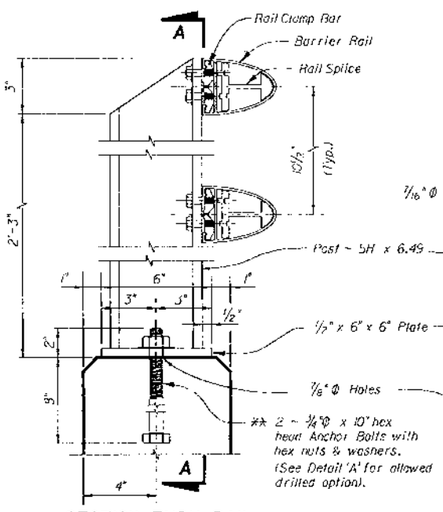

SECTION THRU RAIL

(Bottom rail element not shown)

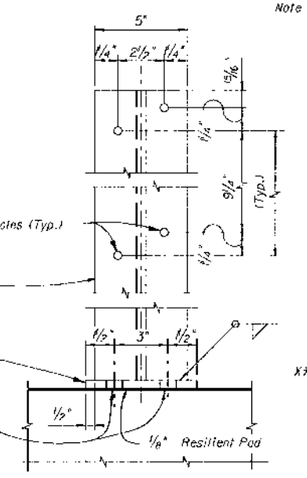

** NOTE: After nuts have been tightened the threads shall be nicked to prevent removal of nuts.

SECTION A-A

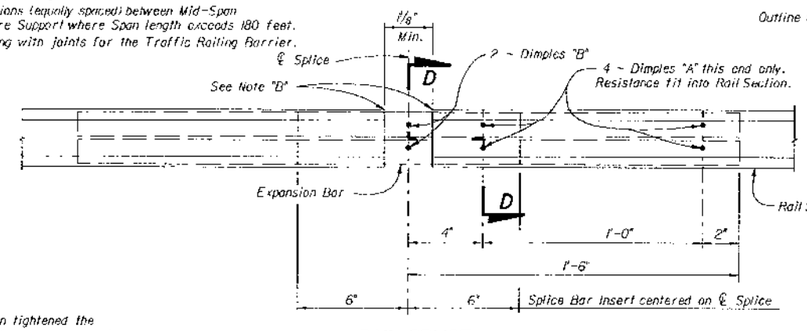

RAIL SPLICE

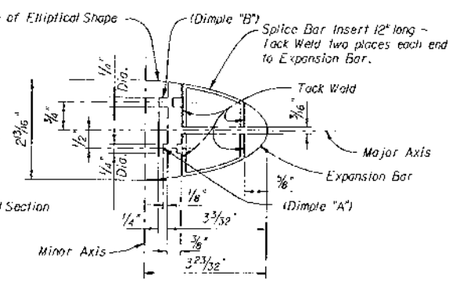

SECTION D-D

RAIL COMPONENTS

NOTE: Rail shall be continuous over a minimum of three posts before splicing.

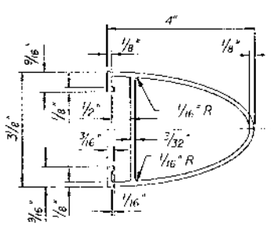

RAIL

NOTE "B" - Rough cut ends and edges of aluminum rails shall be ground or filed smooth to remove all sharp edges, nicks or burrs that would be injurious to the human touch.

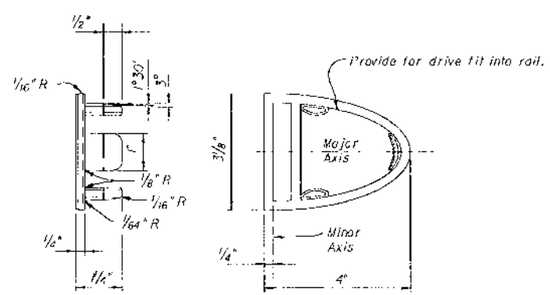

RAIL END CAP

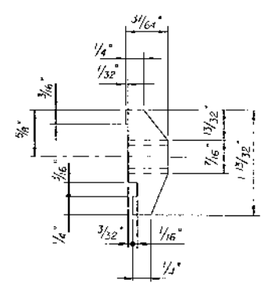

VIEW C-C

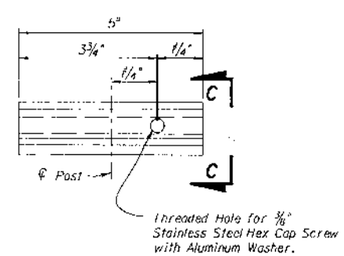

RAIL CLAMP BAR

NOTES

NOTE: The Railing shown on this drawing conforms with the requirements of the American with Disabilities Act (ADA), provided that the gradient does not exceed 5%.

PAYMENT: The cost of all materials in Parapet shall be included in Concrete (Superstructure) and Reinforcing Steel (Superstructure). Aluminum Rail shall be paid for per linear foot and shall be measured along the centerline of the top surface of the parapet. Payment includes Anchor Bolts, Nuts, Resilient Pads, and all incidental materials and labor required to complete the installation. Payment for the rail shall be made under Item No. 400-5-3.

SPECIFICATIONS FOR BRIDGE RAIL

POST: Fabricated wrought aluminum: ASTM B221, alloy 6061 T6 or alloy 6351-T5 with welding using filler wire 4043.

RAIL & RAIL SPLICE: Aluminum: ASTM B221, alloy 6061-T6 or alloy 6351-T-5.

RAIL CLAMP BAR: Aluminum: ASTM B221, alloy 6061-T6 or alloy 6351-T5.

ANCHOR BOLTS: Anchor Bolts shall be in accordance with ASTM A36 or F568, Class 4.6. Anchor Bolts, nuts and washers shall be hot-dip galvanized in accordance with ASTM Designation A153.

RAIL END CAP: ASTM B26 sand cast aluminum alloy, SG 70A-F (Aluminum Association alloy designation A 356-F).

RAIL INSTALLATION: Rail Post shall be normal to Profile Grade. Posts shall be seated on 1/8" thick resilient pads in accordance with Article 932-2.1. The dimension shall be the same as the post base. Rail expansion joints shall occur in the panel between posts on either side of Bridge expansion joints. Rail expansion joints shall be similar to rail splices with provision for movement equal to 1.5 times the bridge joint opening.

SHOP DRAWINGS: Complete details and description of materials of the proposed bridge rail shall be submitted by the contractor for the Engineer's approval prior to fabrication.

REVISIONS					
Date	By	Description	Date	By	Description
			94R		

	Names	Dates
Drawn by	LFC	12-85
Checked by	RDS	1-86
Designed by	—	—
Checked by		—
Approved by	AJG	

ENGINEER OF RECORD:
STRUCTURES DESIGN OFFICE
CENTRAL OFFICE
605 Suwannee Street, MS 33
Tallahassee, Florida 32399-0450

LOGO:
DYER, RIDDLE, MILLS AND PRECOURT, INC.
ENGINEERS - SURVEYORS
505 EAST COLONIAL DRIVE
ORLANDO, FLORIDA 32803

SEAL:

FLORIDA DEPARTMENT OF TRANSPORTATION
STRUCTURES DESIGN OFFICE

ROAD NO.	COUNTY	PROJECT NO.
S.R. 414	SEMINOLE	77002-3503

SHEET TITLE: PEDESTRIAN/BICYCLE RAILING

PROJECT NAME: MAITLAND BOULEVARD

Drawing No. 1 of 1

Index No. 720

MAIT720.DGN

FED. ROAD DIV. NO.	STATE	PROJECT NO.	FISCAL YEAR	SHEET NO.
3	FLA.		FLA.	A-10

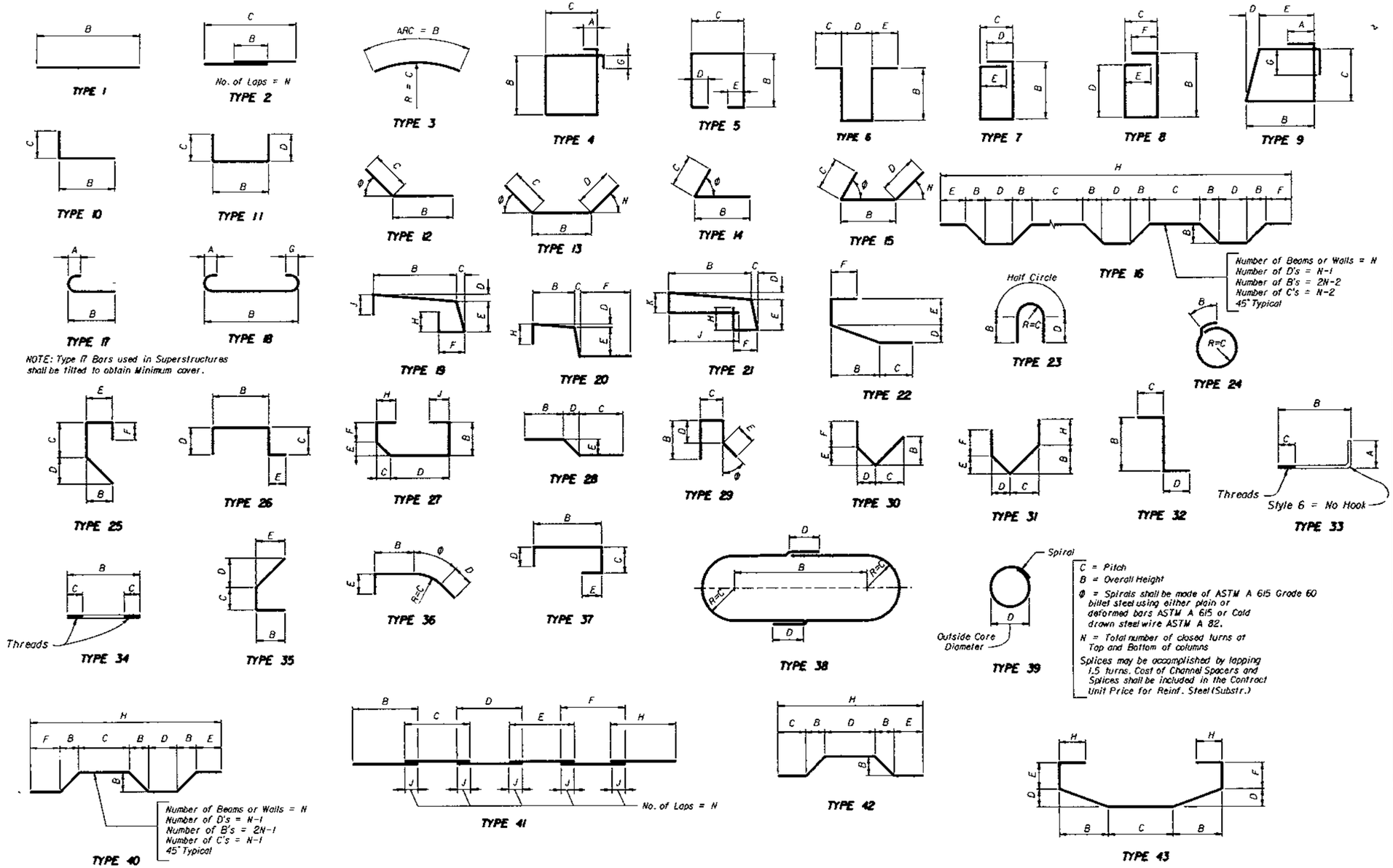

NOTES AND MODIFICATION:

1. For Bar Dimensions See REINFORCING BAR LIST Sheet.
2. See Sheet B-56 For Type 44 Bar

HOOK DETAILS

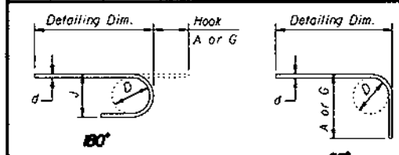

BAR SIZE	D	180° HOOKS		90° HOOKS
		A OR G	J	A OR G
#3	2¼"	5"	3"	6"
#4	3"	6"	4"	8"
#5	3¾"	7"	5"	10"
#6	4½"	8"	6"	1'-0"
#7	5¼"	10"	7"	1'-2"
#8	6"	11"	8"	1'-4"
#9	9½"	1'-3"	11¾"	1'-7"
#10	10¾"	1'-5"	1'-1¼"	1'-10"
#11	12"	1'-7"	1'-2¾"	2'-0"
#14	18¼"	2'-3"	1'-9¾"	2'-7"
#18	24"	3'-0"	2'-4½"	3'-5"
STYLE		1		3

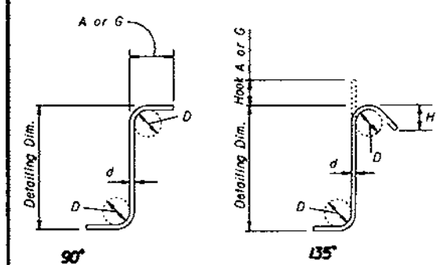

STIRRUPS
(TIES SIMILAR)

RECOMMENDED STIRRUP & TIE HOOK DIMENSIONS

BAR SIZE	D	90° HOOKS	135° HOOKS	
		HOOK A or G	HOOK A or G	APPROX. H
#3	1½"	4"	4"	2½"
#4	2"	4½"	4½"	3"
#5	2½"	6"	5½"	3¾"
#6	4½"	1'-0"	7¾"	4½"
#7	5¼"	1'-2"	9"	5¼"
#8	6"	1'-4"	10¼"	6"
STYLE		4	5	

STYLE 6 = NO HOOK

Hook Styles Detailed on this sheet are for Illustration Only.

Actual Hook Style for any particular bar will be shown under A or G Heading on REINFORCING BAR LIST sheet.

All Dimensions are out-to-out.

REVISIONS					
Date	By	Description	Date	By	Description
			94R		

	Names	Dates
Drawn by	JSP	11-93
Checked by	AJG	11-93
Designed by		
Checked by		
Approved by	AJG	

ENGINEER OF RECORD:
STRUCTURES DESIGN OFFICE
CENTRAL OFFICE
605 Suwannee Street, MS 33
Tallahassee, Florida 32399-0450

LOGO:
DYER, RIDDLE, MILLS AND PRECOURT, INC.
ENGINEERS · SURVEYORS
1505 EAST COLONIAL DRIVE
ORLANDO, FLORIDA 32803

SEAL:

FLORIDA DEPARTMENT OF TRANSPORTATION
STRUCTURES DESIGN OFFICE

ROAD NO.	COUNTY	PROJECT NO.
S.R. 414	SEMINOLE	77002-3503

SHEET TITLE: STANDARD BAR BENDING DETAILS

PROJECT NAME: MAITLAND BOULEVARD

Drawing No. 1 of 1

Index No. 1300 MOD.

MAIT1300.DGN

FED. ROAD DIV. NO.	STATE	PROJECT NO.	FISCAL YEAR	SHEET NO.
3	FLA.		98	B-1

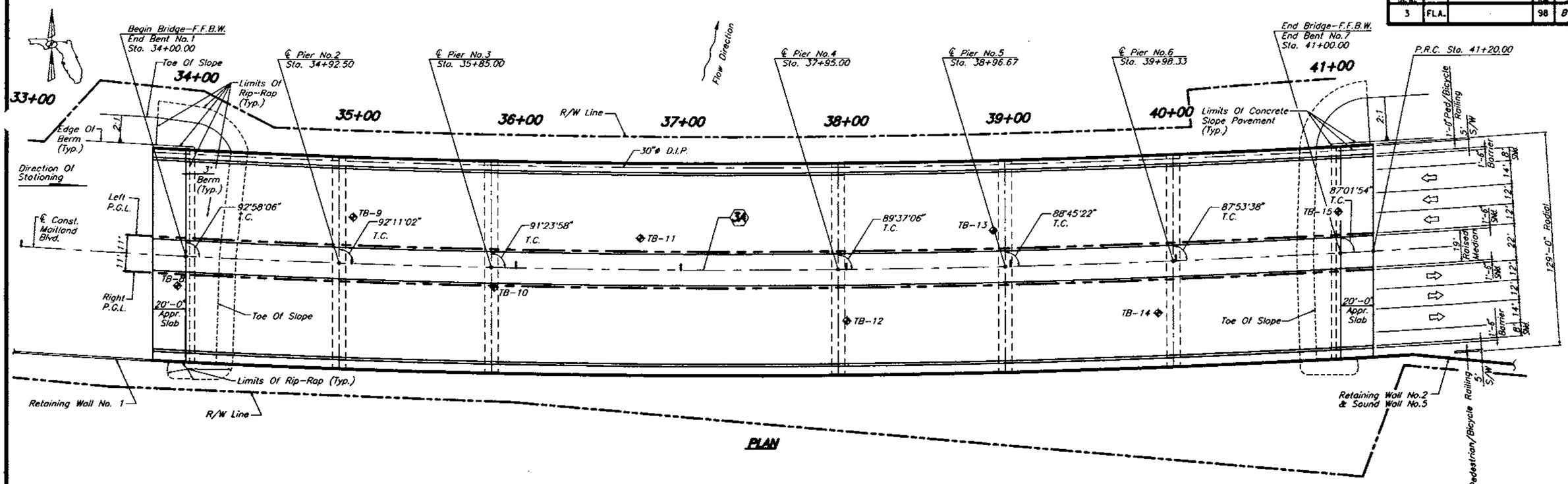

PLAN

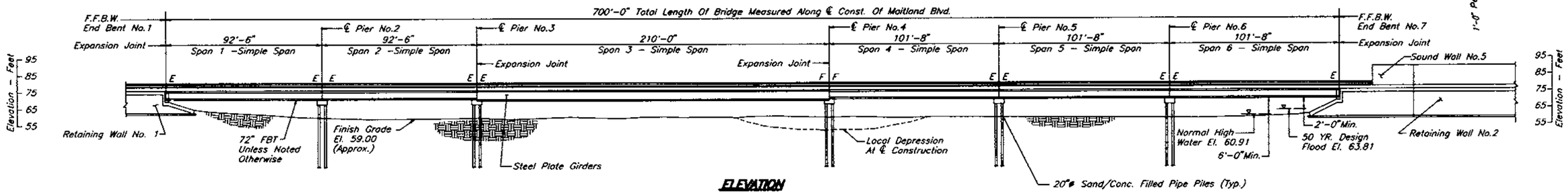

ELEVATION

NOTE:

1. All Bents Parallel S 04°48'45" E
2. ◆ Indicates Approximate Soil Borings.
3. See Miscellaneous Details Sheet For Approach Slab, Conc. Slope Pavement Details And Rip-Rap Details.

CURVE DATA 3A

Δ = 07°43'27" Lt.
D = 00°50'51"
T = 456.08'
L = 910.77'
R = 6755.80'
e = Normal/Crown
P.C. Sta. = 32+08.39 (Back)
32+09.23 (Ahead)
P.I. Sta. = 36+65.30
P.R.C. Sta. = 41+20.00

TRAFFIC DATA MAITLAND BLVD.

Est. 1998 ADT = 28,989 EST
Est. 2008 ADT = 31,961 EST
Est. 2018 ADT = 38,978
K = 9.0%
D = 55%
T = 5% (24 HR)
Design Speed = 45 MPH

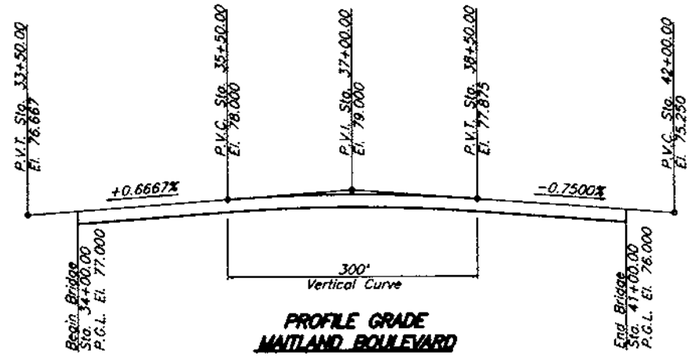

PROFILE GRADE MAITLAND BOULEVARD

Bridge # 770074

REVISIONS					
Date	By	Description	Date	By	Description

	Names	Dates
Drawn by	JLA/JJS	3/96
Checked by	MKA	3/96
Designed by	MKA	3/96
Checked by	PM	3/96
Approved by	Peeter Mannik, P.E.	

ENGINEER OF RECORD:
DYER, RIDDLE, MILLS AND PRECOURT, INC.
1505 EAST COLONIAL DRIVE
ORLANDO, FLORIDA 32803

LOGO: DRMP DYER, RIDDLE, MILLS & PRECOURT, INC. ENGINEERS · SURVEYORS

SEAL: Peter Mannik 3/4/98

FLORIDA DEPARTMENT OF TRANSPORTATION
STRUCTURES DESIGN OFFICE

ROAD NO.	COUNTY	PROJECT NO.
SR414	SEMINOLE	77002-3503

SHEET TITLE: GENERAL PLAN AND ELEVATION

PROJECT NAME: MAITLAND BOULEVARD OVER LAKE BOSSE BRIDGE NO. 770074

Drawing No.

Index No.

JA/JS02/07/97 4:09PM M:\000BR\LKB\LKBOPE.DWG

FED. ROAD DIV. NO.	STATE	PROJECT NO.	FISCAL YEAR	SHEET NO.
3	FLA.		98	B-2

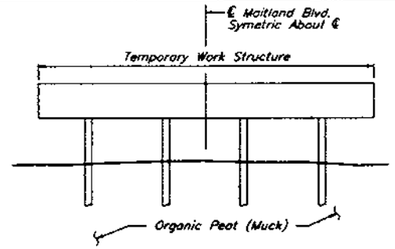

PHASE-I

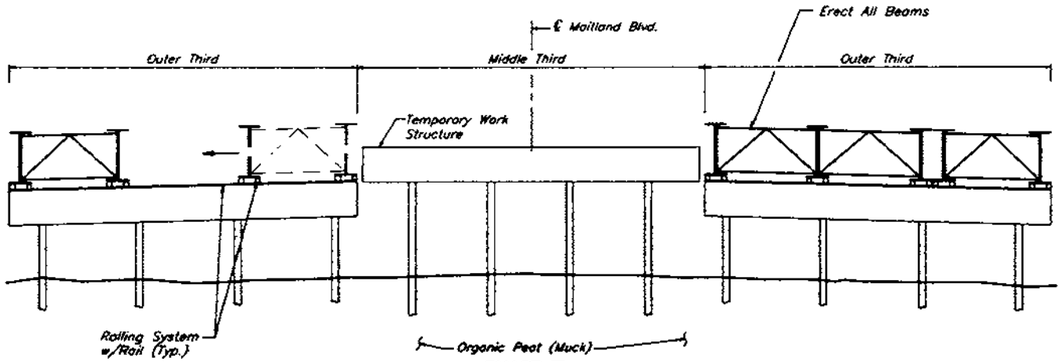

PHASE-II

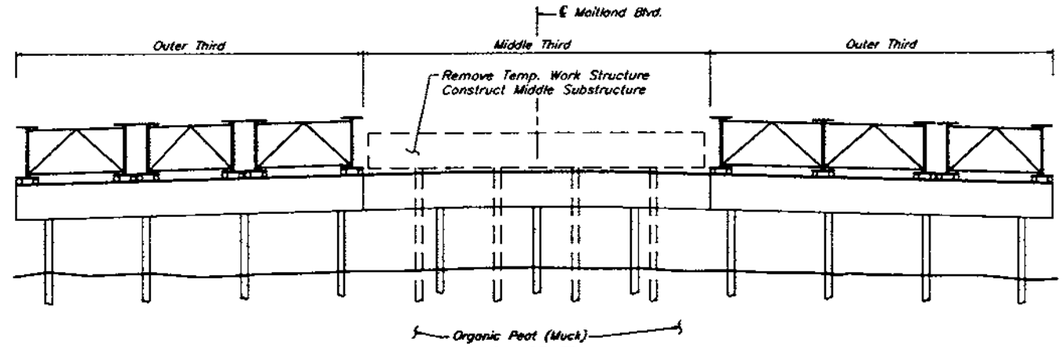

PHASE-III

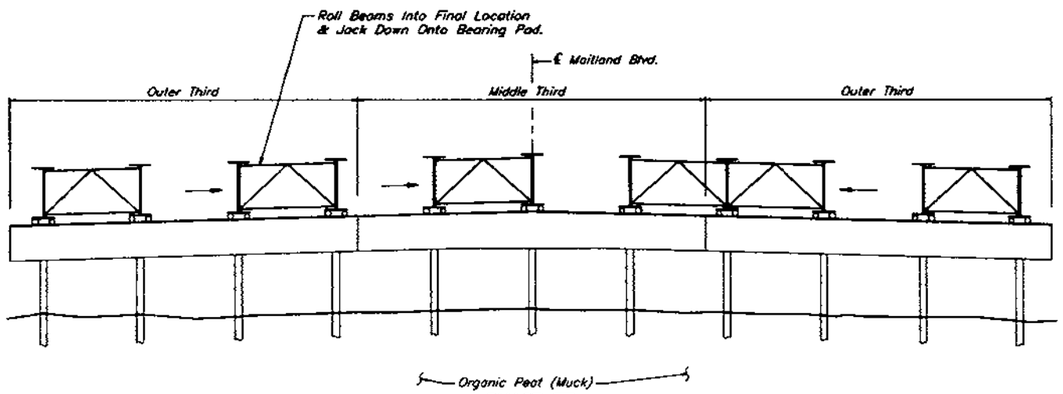

PHASE-IV

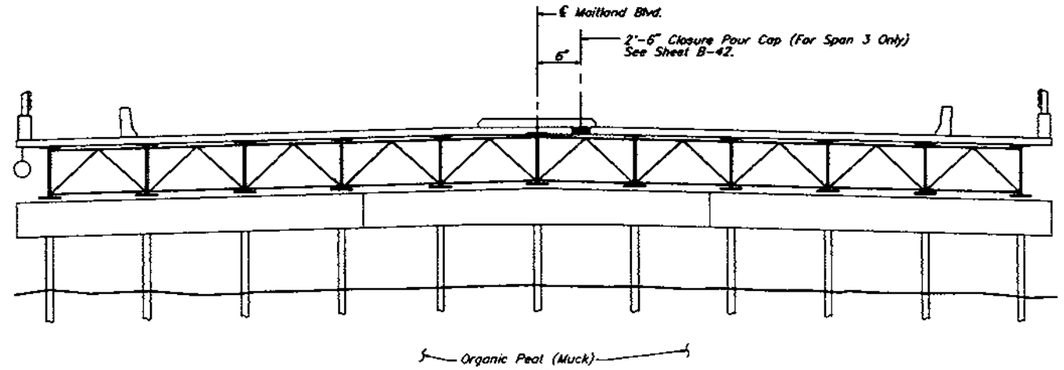

PHASE-V

PHASE-I

Construct Temporary Work Bridge. See Note 2.

PHASE-II

1. Construct Outer Thirds Of Substructures From Temporary Work Bridge. See Note 2.
2. Erect All Beams. Place Beam On Rolling System And Roll Beams To Pier Edge Or Closest To A Previously Erected Beam.

PHASE-III

Starting From A Bridge End, Construct Middle-Third Substructure. After The Completion Of One Substructure Pier Remove The Temporary Work Bridge From The Completed Substructure To The Next Proposed Substructure Pier. Follow This Process Until The Middle-Third Substructures And Temp. Work Bridge Removal Is Complete.

PHASE-IV

Roll Girders Into Final Design Position. By Use Of Jacks, Remove Rolling Devices And Lower Girders Onto Bearing Pads.

PHASE-V

Complete Bridge Construction.

GENERAL CONSTRUCTION NOTES

1. The Contractor Has The Option To Provide An Alternate Construction Sequence. For The Construction Method Chosen The Contractor Shall Submit, For Approval By The Engineer, Signed And Sealed Shop Drawings And Calculations Describing In Detail The Proposed Methods.
2. Temporary Work Structure:
   a. A Temporary Work Structure Is Required For Construction.
   b. The Construction Of The Temporary Work Structure Shall Be In Accordance With The Technical Special Provisions Section 103.
   c. Payment For Temporary Work Structure Shall Be Under Pay Item 103-1 Temporary Work Structure (Lump Sum).
3. Longitudinal Closure Pour Cap At The Steel Girder Span 3 Is Permitted. See Superstructure Detail Sheet. Longitudinal Contruction Joint At The Concrete Girder Spans Will Be Permitted Along The ℄ Of The Middle Beam Only.
4. Erection Of Steel Girder Span Is Shown. Erection Of Concrete Girder Spans Is Similar. Contractor To Provide Temporary Bracing At Concrete Girder Ends, Similar To The Steel Girder Bracing.
5. The Contractor Shall Submit Signed & Sealed Shop Drawings For The Proposed Rolling System.

REVISIONS

Date	By	Description	Date	By	Description

	Name	Date
Drawn by	JLA/JJS	3/96
Checked by	MKA	3/96
Designed by	MKA	3/96
Checked by	PM	3/96
Approved by	Peeter Mannik, P.E.	

ENGINEER OF RECORD:
DYER, RIDDLE, MILLS AND PRECOURT, INC.
1604 EAST COLONIAL DRIVE
ORLANDO, FLORIDA 32803

LOGO: DRMP DYER, RIDDLE, MILLS & PRECOURT, INC. ENGINEERS · SURVEYORS

SEAL: Peeter Mannik 3/4/98

FLORIDA DEPARTMENT OF TRANSPORTATION
STRUCTURES DESIGN OFFICE

ROAD NO.	COUNTY	PROJECT NO.
SR414	SEMINOLE	7-002-3503

SHEET TITLE: CONSTRUCTION SEQUENCE

PROJECT NAME: MAITLAND BOULEVARD OVER LAKE BOSSE

Drawing No.

Index No.

5/05/03/07/97 07:53AM M:\000BRK\LKBL\KBPHCON.DWG

STATE PROJ. NO.	SHEET NO.
77002-3503	8-4

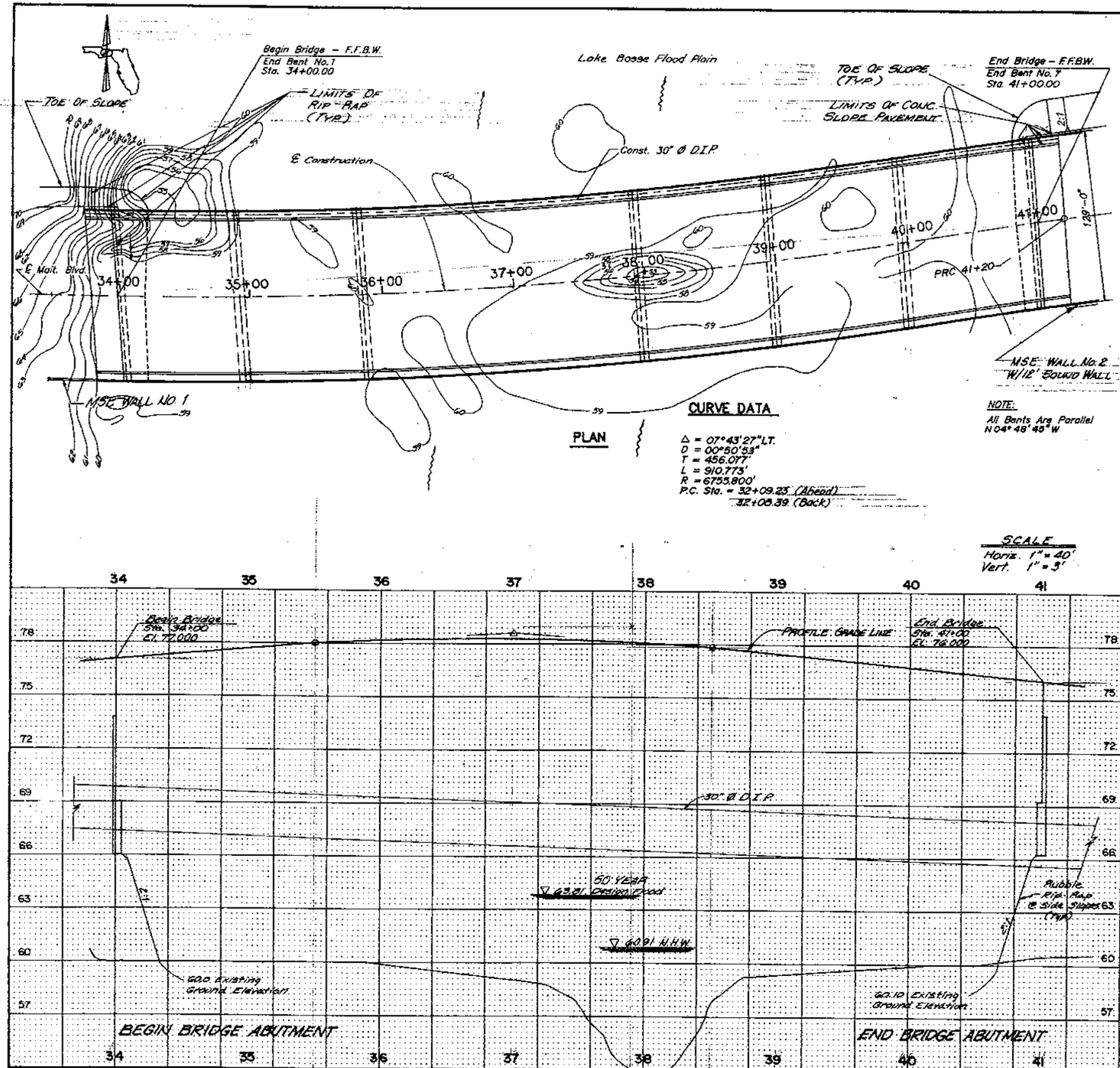

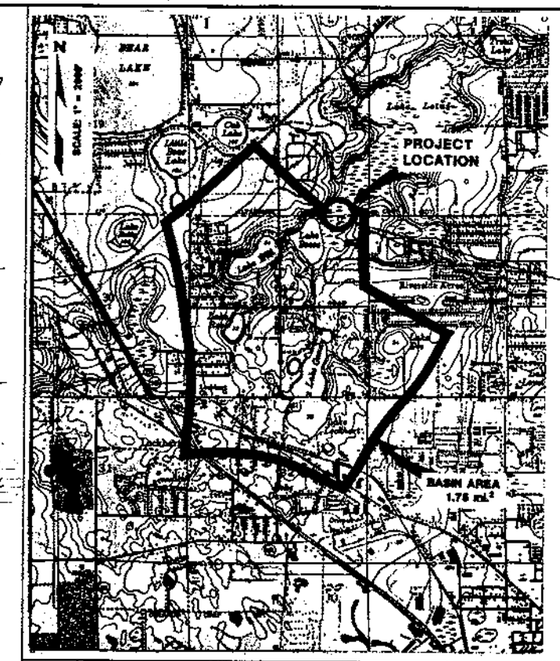

Larry L. Smith 3-5-98

(REFERENCE)	EXISTING STRUCTURES (1)	(2)	(3)	(4)	ASSUMED CONFIGURATION
FOUNDATION	N/A	N/A	N/A	N/A	2'0" Conc. Piling Pile Bents
OVERALL LENGTH					100'
SPAN LENGTH					Varies
TYPE CONSTRUCTION					Hybrid Beams
AREA OF OPENING @ H.W.					N/A
ROADWAY WIDTH					129'
ELEV. LOW MEMBER					66.96

HYDRAULIC DESIGN DATA

NOTE: The hydraulic data is shown for informational purposes only to indicate the flood discharges and water surface elevations which may be anticipated in any given year. This data was generated using highly variable factors determined by a study of the watershed. Many judgements and assumptions are required to establish these factors. The resultant hydraulic data is sensitive to changes, particularly antecedent conditions, urbanization, channelization and land use. Users of this data are cautioned against the assumption of precision which cannot be obtained.

DEFINITIONS:
Design Flood: The flood utilized to assure a desired level of hydraulic performance.
Base Flood: The flood having a 1% chance of being exceded in any year. (100 Year Frequency)
Overtopping Flood: The flood which causes flow over the highway, over a watershed divide or thru emergency relief structures.
Greatest Flood: The most severe flood which can be predicted where overtopping is not practicable.

WATER SURFACE ELEVATIONS: N.H.W. (Non-Tidal) N/A M.H.W. N/A M.L.W. N/A

FLOOD DATA:	MAX. EVENT OF RECORD	DESIGN FLOOD	BASE FLOOD	☐ OVERTOPPING FLOOD ☒ GREATEST FLOOD
STAGE ELEV. NGVD (FT.)	Not Available	63.81	65.00	65.78
DISCHARGE (CFS)	Not Available	392	459	579
AVERAGE VELOCITY (FPS)	Not Available	0.12	0.13	0.13
EXCEEDANCE PROB. (%)	Not Available	2.0	1.0	0.2
FREQUENCY (YR.)	Not Available	50	100	500

HYDRAULIC RECOMMENDATIONS

1. BEGIN BRIDGE STATION 34+00 END BRIDGE STATION 41+00 SKEW ANGLE Varies
2. CHANNEL SECTION: ℄ STATION * See Remarks BOTTOM WIDTH N/A ELEV. N/A SIDE SLOPE N/A
3. LIMITS OF CHANNEL EXCAVATION: RT. N/A LT. N/A
4. CLEARANCE: NAVAGATION: HORIZ. N/A VERT. N/A ABOVE EL. N/A DRIFT: HORIZ. 650' VERT. 3.15' ABOVE EL. 63.81
5. SCOUR PREDICTION: No Contraction Scour Is Predicted. 3.5 Feet Of Pier Scour Is Predicted For The 50 Yr. 100 Yr. & 500 Yr. Storm Events. Abutment Scour Will Be Prevented Through The Use Of Rubble Rip-Rap.
6. SLOPE PROTECTION: Rubble Rip-Rap At Spill Through Abutments.
7. DECK DRAINAGE: Runoff Will Be Directed To Inlets At Either End Of The Bridge Via Curb And Gutter Construction.
8. OTHER:

REMARKS: The Bridge Spans A Shallow Flood Plain With No Defined Channel.

REVISIONS											
DATE	BY	DESCRIPTION	DATE	BY	DESCRIPTION	DATE	BY	DESCRIPTION	DATE	BY	DESCRIPTION

	NAME	DATE		NAME	DATE
DESIGNED BY	M.K.A.	7-92	DRAWN BY	D.A.G.	7-92
CHECKED BY	J.O.C.	7-92	CHECKED BY	M.K.A.	7-92

SUPERVISED BY: LARRY L. SMITH, P.E.

FLORIDA DEPARTMENT OF TRANSPORTATION

APPROVED BY:

DATE:

BRIDGE HYDRAULIC RECOMMENDATIONS

FED. ROAD NO.	STATE	PROJECT NO.	FINAL	SHEET NO.
3	FLA.			B-5

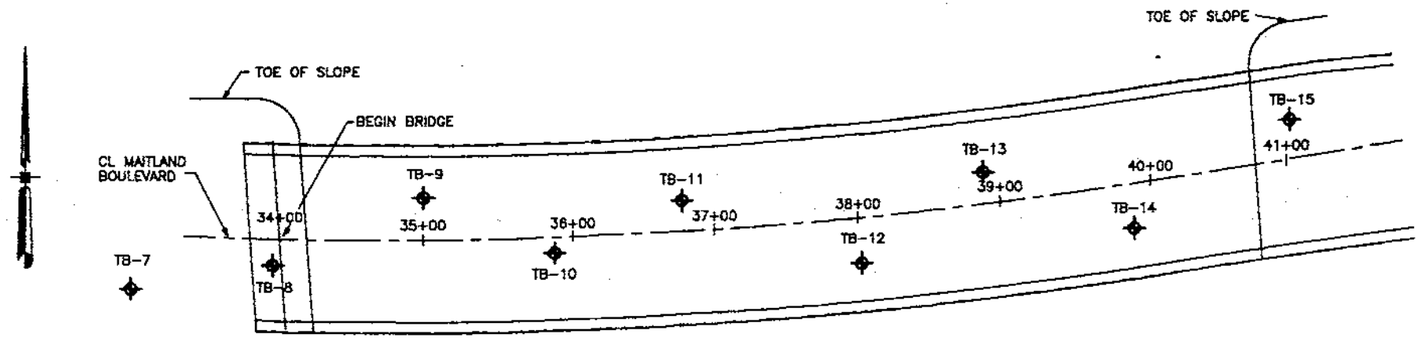

DISTANCE IN FEET
0 25 50 100

SECTION: 20
TOWNSHIP: 21 S
RANGE: 29 E

LEGEND

- SAND
- SILTY SAND
- CLAYEY SAND
- CLAY
- (SP) UNIFIED SOIL CLASSIFICATION GROUP SYMBOL
- (7-11-91) WATER (WITH DATE OF READING)
- N STANDARD PENETRATION RESISTANCE IN BLOWS PER FOOT UNLESS OTHERWISE NOTED
- LOCATION OF STANDARD PENETRATION TEST BORING
- SURVEY DATA TO BE CONSIDERED APPROXIMATE
- -200=0 LL=0 PL=0 — FINES PASSING #200 SIEVE IN PERCENT; LIQUID LIMIT IN PERCENT; PLASTIC LIMIT IN PERCENT

BOR. NO.: TB-7
* STA. 33+00, 25.0' RT.
ELEV. 66.0'

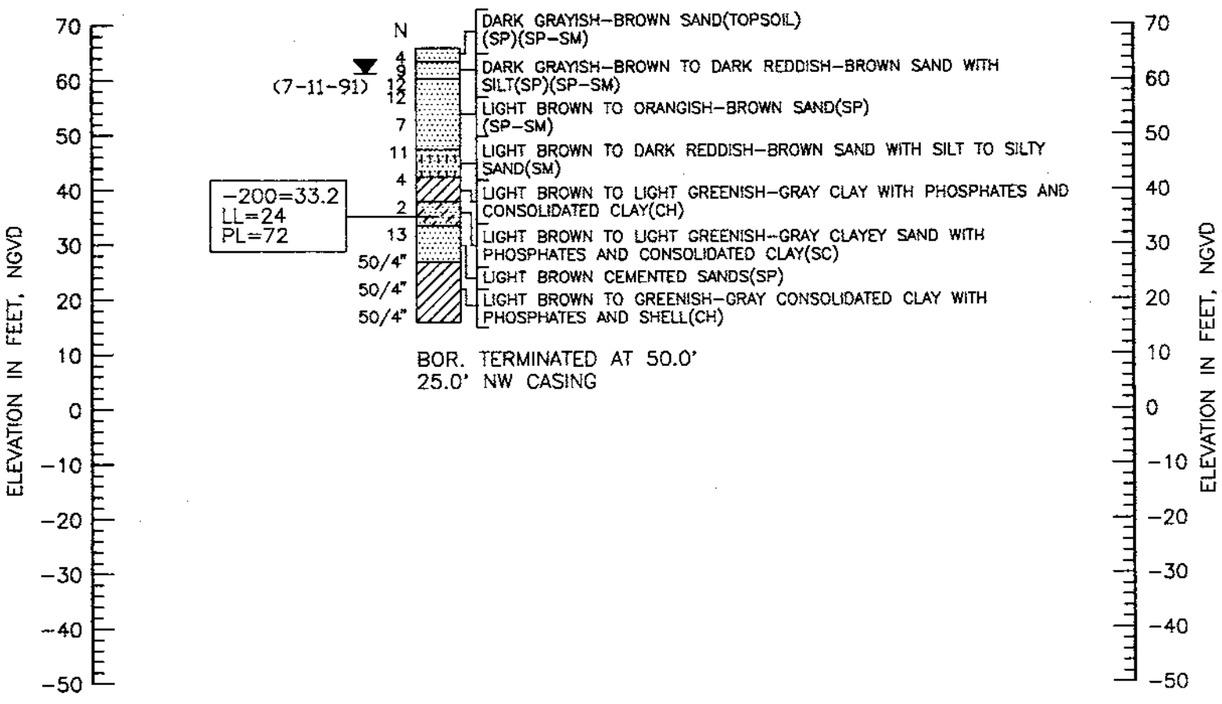

BOR. TERMINATED AT 50.0'
25.0' NW CASING

STANDARD PENETRATION TEST DATA

SPOON INSIDE DIA.	1 3/8 IN.
SPOON OUTSIDE DIA.	2 IN.
AVG. HAMMER DROP	30 IN.
HAMMER WEIGHT	140 LBS.
HAMMER TYPE	SAFETY

NOTE: STRATA BOUNDARIES ARE APPROXIMATE AND MAY VARY BETWEEN OR AWAY FROM BORING LOCATIONS.

GRANULAR MATERIALS

RELATIVE DENSITY	SPT (BLOWS/FT.)
VERY LOOSE	LESS THAN 4
LOOSE	4-10
MEDIUM DENSE	10-30
DENSE	30-50
VERY DENSE	GREATER THAN 50

SILTS AND CLAYS

CONSISTENCY	SPT (BLOWS/FT.)
VERY SOFT	LESS THAN 2
SOFT	2-4
FIRM	4-8
STIFF	8-15
VERY STIFF	15-30
HARD	GREATER THAN 30

NOTES: BASED ON A REVIEW OF THE ST. JOHNS RIVER WATER MANAGEMENT DISTRICT POTENTIOMETRIC MAP OF THE UPPER FLORIDIAN AQUIFER FOR THE PROJECT AREA, THE ESTIMATED ELEVATION OF THE ARTESIAN HEAD MAY RANGE FROM APPROXIMATELY ELEVATION +45 TO +50 FEET NGVD.

SOIL DESCRIPTIONS ARE BASED ON VISUAL EXAMINATION OF THE RECOVERED SAMPLES, SUPPLEMENTED BY LIMITED LABORATORY TESTING. STRATA BOUNDARIES ARE APPROXIMATE AND ACTUAL TRANSITION MAY BE MORE GRADUAL THAN INDICATED.

ENVIRONMENTAL CLASSIFICATION:

SUPERSTRUCTURE: SLIGHTLY AGGRESSIVE

SUBSTRUCTURE:
CONCRETE: EXTREMELY AGGRESSIVE (pH=4.3)
STEEL: EXTREMELY AGGRESSIVE (pH=4.3)

REVISIONS

Date	By	Description	Date	By	Description

	Name	Date
Drawn by	DJW	1-1-92
Checked by	GK	1-1-92
Designed by	N/A	N/A
Checked by	N/A	N/A
Approved by	LPM	

ENGINEER OF RECORD:
LARRY P. MOORE, P.E. #47673
PSI
1675 LEE ROAD
WINTER PARK, FLORIDA 32789

LOGO: PSI Environmental Geotechnical Construction Consulting • Engineering • Testing

SEAL: 3-4-98

FLORIDA DEPARTMENT OF TRANSPORTATION
GEOTECHNICAL DESIGN OFFICE

ROAD NO.	COUNTY	PROJECT NO.
SR 414	SEMINOLE	77002-3503

SHEET TITLE: REPORT OF SPT BORINGS FOR STRUCTURE

PROJECT NAME: MAITLAND BOULEVARD EXTENSION
S.R. 414 ; LAKE BOSSE BRIDGE

Drawing No.

Index No.

PSI PROJECT No. 754-05280
FIGURE: 3

FED. ROAD DIST. NO.	COUNTY	PROJECT NO.	CONTR. NO.	SHEET NO.
3	FLA.			B-6

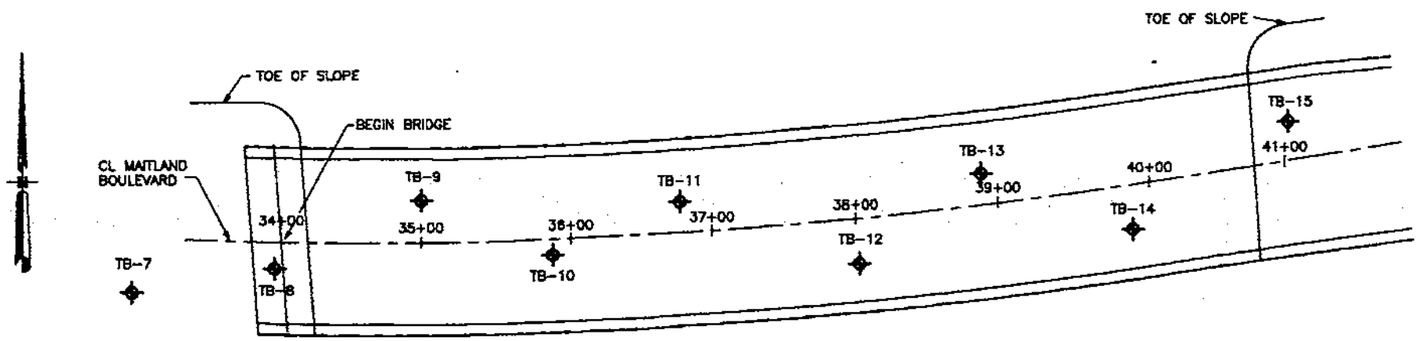

DISTANCE IN FEET
0 25 50 100

SECTION: 20
TOWNSHIP: 21 S
RANGE: 29 E

LEGEND

- SAND
- SILTY SAND
- CLAYEY SAND
- CLAY
- PEAT
- (SP) UNIFIED SOIL CLASSIFICATION GROUP SYMBOL
- (11-20-91) WATER (WITH DATE OF READING)
- N STANDARD PENETRATION RESISTANCE IN BLOWS PER FOOT UNLESS OTHERWISE NOTED
- WR FELL UNDER WEIGHT OF ROD
- CIRCULATION LOSS
- LOCATION OF STANDARD PENETRATION TEST BORING

-200=0	FINES PASSING #200 SIEVE IN PERCENT
W=0	NATURAL MOISTURE CONTENT IN PERCENT
OC=0	ORGANIC CONTENT IN PERCENT
LL=0	LIQUID LIMIT IN PERCENT
PL=0	PLASTIC LIMIT IN PERCENT

BOR. NO.: TB-8
STA. 33+96, 18.0' RT.
ELEV. 60.1'

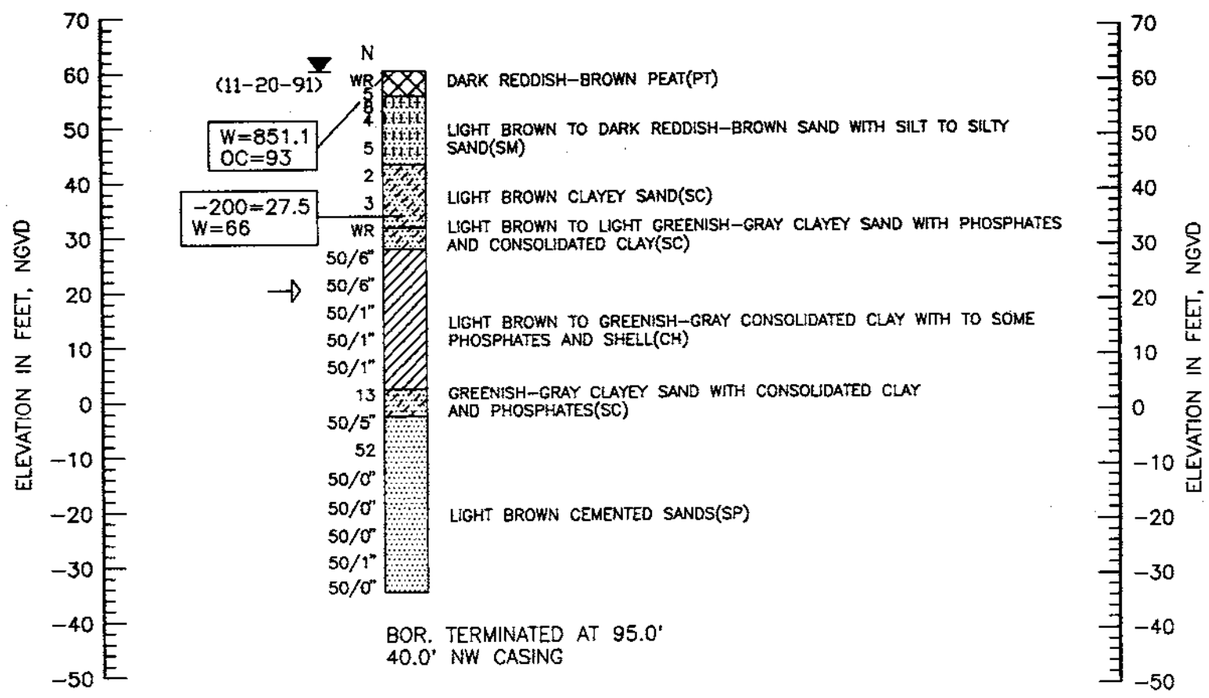

BOR. TERMINATED AT 95.0'
40.0' NW CASING

STANDARD PENETRATION TEST DATA

SPOON INSIDE DIA.	1 3/8 IN.
SPOON OUTSIDE DIA.	2 IN.
AVG. HAMMER DROP	30 IN.
HAMMER WEIGHT	140 LBS.
HAMMER TYPE	SAFETY

NOTE: STRATA BOUNDARIES ARE APPROXIMATE AND MAY VARY BETWEEN OR AWAY FROM BORING LOCATIONS.

GRANULAR MATERIALS

RELATIVE DENSITY	SPT (BLOWS/FT.)
VERY LOOSE	LESS THAN 4
LOOSE	4-10
MEDIUM DENSE	10-30
DENSE	30-50
VERY DENSE	GREATER THAN 50

SILTS AND CLAYS

CONSISTENCY	SPT (BLOWS/FT.)
VERY SOFT	LESS THAN 2
SOFT	2-4
FIRM	4-8
STIFF	8-15
VERY STIFF	15-30
HARD	GREATER THAN 30

NOTES: BASED ON A REVIEW OF THE ST. JOHNS RIVER WATER MANAGEMENT DISTRICT POTENTIOMETRIC MAP OF THE UPPER FLORIDIAN AQUIFER FOR THE PROJECT AREA, THE ESTIMATED ELEVATION OF THE ARTESIAN HEAD MAY RANGE FROM APPROXIMATELY ELEVATION +45 TO +50 FEET NGVD.

SOIL DESCRIPTIONS ARE BASED ON VISUAL EXAMINATION OF THE RECOVERED SAMPLES, SUPPLEMENTED BY LIMITED LABORATORY TESTING. STRATA BOUNDARIES ARE APPROXIMATE AND ACTUAL TRANSITION MAY BE MORE GRADUAL THAN INDICATED.

ENVIRONMENTAL CLASSIFICATION:

SUPERSTRUCTURE: SLIGHTLY AGGRESSIVE

SUBSTRUCTURE:
CONCRETE: EXTREMELY AGGRESSIVE (pH=4.3)
STEEL: EXTREMELY AGGRESSIVE (pH=4.3)

REVISIONS

Date	By	Description	Date	By	Description

	Name	Date
Drawn by	DJW	1-1-92
Checked by	GK	1-1-92
Designed by	N/A	N/A
Checked by	N/A	N/A
Approved by	LPM	

ENGINEER OF RECORD:
LARRY P. MOORE, P.E. #47873
PSI
1675 LEE ROAD
WINTER PARK, FLORIDA 32789

LOGO: PSI Environmental Geotechnical Construction
Consulting • Engineering • Testing

SEAL: 3-4-98

FLORIDA DEPARTMENT OF TRANSPORTATION
GEOTECHNICAL DESIGN OFFICE

ROAD NO.	COUNTY	PROJECT NO.
SR 414	SEMINOLE	77002-3503

SHEET TITLE: REPORT OF SPT BORINGS FOR STRUCTURE

PROJECT NAME: MAITLAND BOULEVARD EXTENSION
S.R. 414 ; LAKE BOSSE BRIDGE

Drawing No.

Index No.

PSI PROJECT No. 754-05260
FIGURE: 5

FED. ROAD DIV. NO.	STATE	PROJECT NO.	FISCAL YEAR	SHEET NO.
3	FLA.			B-7

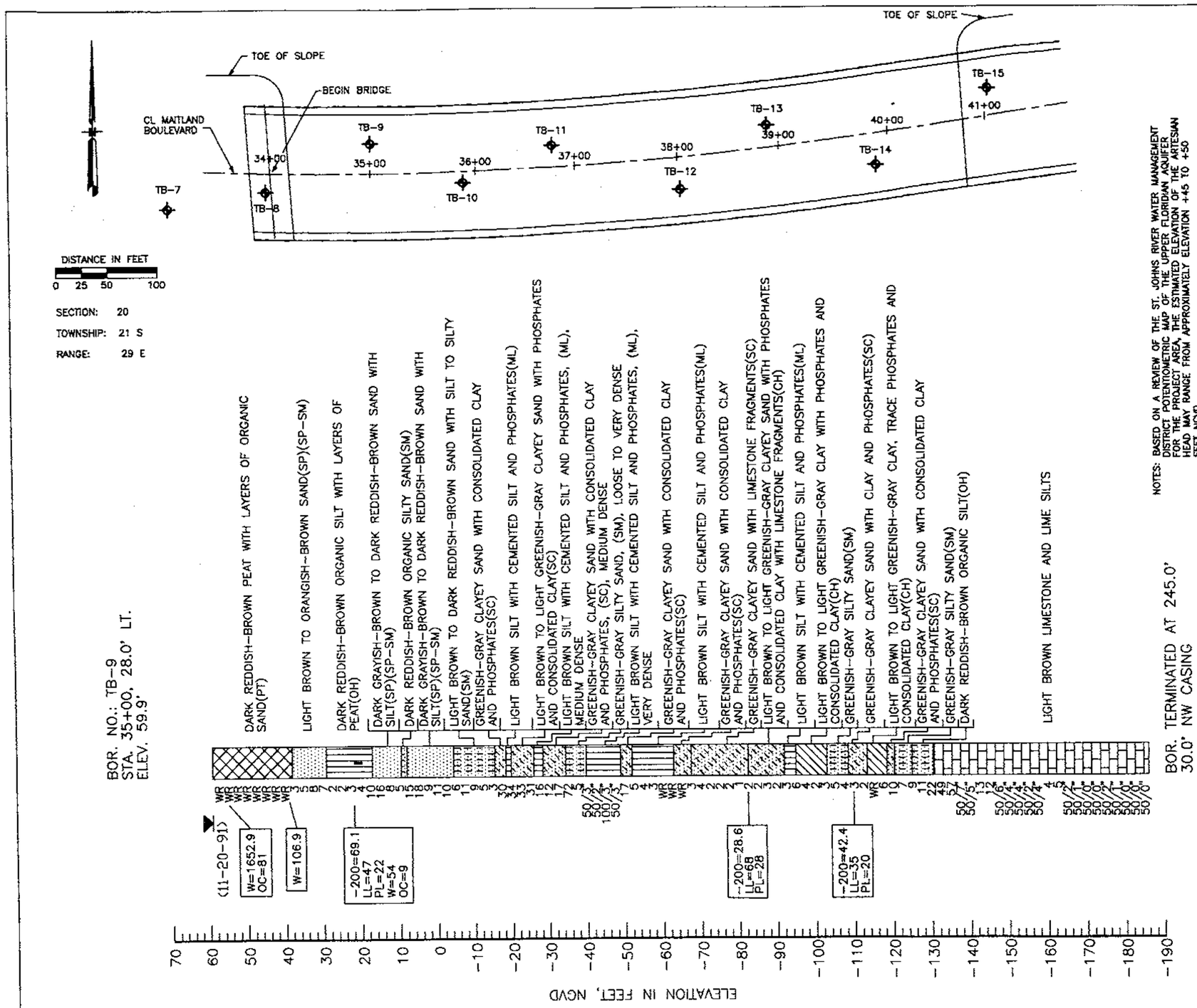

NOTES: BASED ON A REVIEW OF THE ST. JOHNS RIVER WATER MANAGEMENT DISTRICT POTENTIOMETRIC MAP OF THE UPPER FLORIDAN AQUIFER FOR THE PROJECT AREA, THE ESTIMATED ELEVATION OF THE ARTESIAN HEAD MAY RANGE FROM APPROXIMATELY ELEVATION +45 TO +50 FEET NGVD.

SOIL DESCRIPTIONS ARE BASED ON VISUAL EXAMINATION OF THE RECOVERED SAMPLES, SUPPLEMENTED BY LIMITED LABORATORY TESTING. STRATA BOUNDARIES ARE APPROXIMATE AND ACTUAL TRANSITION MAY BE MORE GRADUAL THAN INDICATED.

LEGEND

- SAND
- SILT
- SILTY SAND
- CLAYEY SAND
- CLAY
- PEAT
- LIMESTONE
- (SP) UNIFIED SOIL CLASSIFICATION GROUP SYMBOL
- (11-20-91) WATER (WITH DATE OF READING)
- N STANDARD PENETRATION RESISTANCE IN BLOWS PER FOOT UNLESS OTHERWISE NOTED
- WR FELL UNDER WEIGHT OF ROD
- LOCATION OF STANDARD PENETRATION TEST BORING
- SURVEY DATA TO BE CONSIDERED APPROXIMATE
- LOCATION OF UNDISTURBED SHELBY TUBE SAMPLE

-200=0	FINES PASSING #200 SIEVE IN PERCENT
W=0	NATURAL MOISTURE CONTENT IN PERCENT
LL=0	LIQUID LIMIT IN PERCENT
PL=0	PLASTIC LIMIT IN PERCENT
OC=0	ORGANIC CONTENT IN PERCENT

STANDARD PENETRATION TEST DATA

SPOON INSIDE DIA.	1 3/8 IN.
SPOON OUTSIDE DIA.	2 IN.
AVG. HAMMER DROP	30 IN.
HAMMER WEIGHT	140 LBS.
HAMMER TYPE	SAFETY

NOTE: STRATA BOUNDARIES ARE APPROXIMATE AND MAY VARY BETWEEN OR AWAY FROM BORING LOCATIONS.

GRANULAR MATERIALS

RELATIVE DENSITY	SPT (BLOWS/FT.)
VERY LOOSE	LESS THAN 4
LOOSE	4-10
MEDIUM DENSE	10-30
DENSE	30-50
VERY DENSE	GREATER THAN 50

SILTS AND CLAYS

CONSISTENCY	SPT (BLOWS/FT.)
VERY SOFT	LESS THAN 2
SOFT	2-4
FIRM	4-8
STIFF	8-15
VERY STIFF	15-30
HARD	GREATER THAN 30

ENVIRONMENTAL CLASSIFICATION:

SUPERSTRUCTURE: SLIGHTLY AGGRESSIVE

SUBSTRUCTURE:
CONCRETE: EXTREMELY AGGRESSIVE (pH=4.3)
STEEL: EXTREMELY AGGRESSIVE (pH=4.3)

REVISIONS

Date	By	Description	Date	By	Description

	Normal	Dates
Drawn by	DJW	1-1-92
Checked by	GK	1-1-92
Designed by	N/A	N/A
Checked by	N/A	N/A
Approved by	LPM	

ENGINEER OF RECORD:
LARRY P. MOORE, P.E. #47573
PSI
1675 LEE ROAD
WINTER PARK, FLORIDA 32789

LOGO: PSI Environmental Geotechnical Construction Consulting • Engineering • Testing

SEAL: 3-4-98

FLORIDA DEPARTMENT OF TRANSPORTATION
GEOTECHNICAL DESIGN OFFICE

ROAD NO.	COUNTY	PROJECT NO.
SR 414	SEMINOLE	77002-3503

SHEET TITLE: REPORT OF SPT BORINGS FOR STRUCTURE

PROJECT NAME: MAITLAND BOULEVARD EXTENSION
S.R. 414 ; LAKE BOSSE BRIDGE

Drawing No.

Index No.

PSI PROJECT No. 754-05260
FIGURE: 6

FED. ROAD DIV. NO.	STATE	PROJECT NO.	FOLIO NO.	SHEET NO.
3	FLA.			B-8

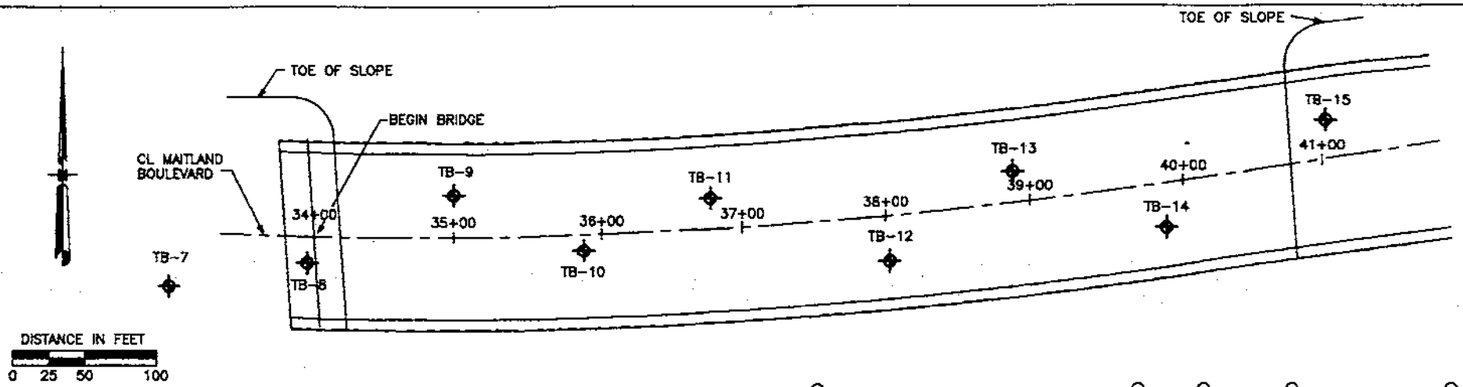

SECTION: 20
TOWNSHIP: 21 S
RANGE: 29 E

BOR. NO.: TB-10
STA. 35+87, 12.0' RT.
ELEV. 59.7'

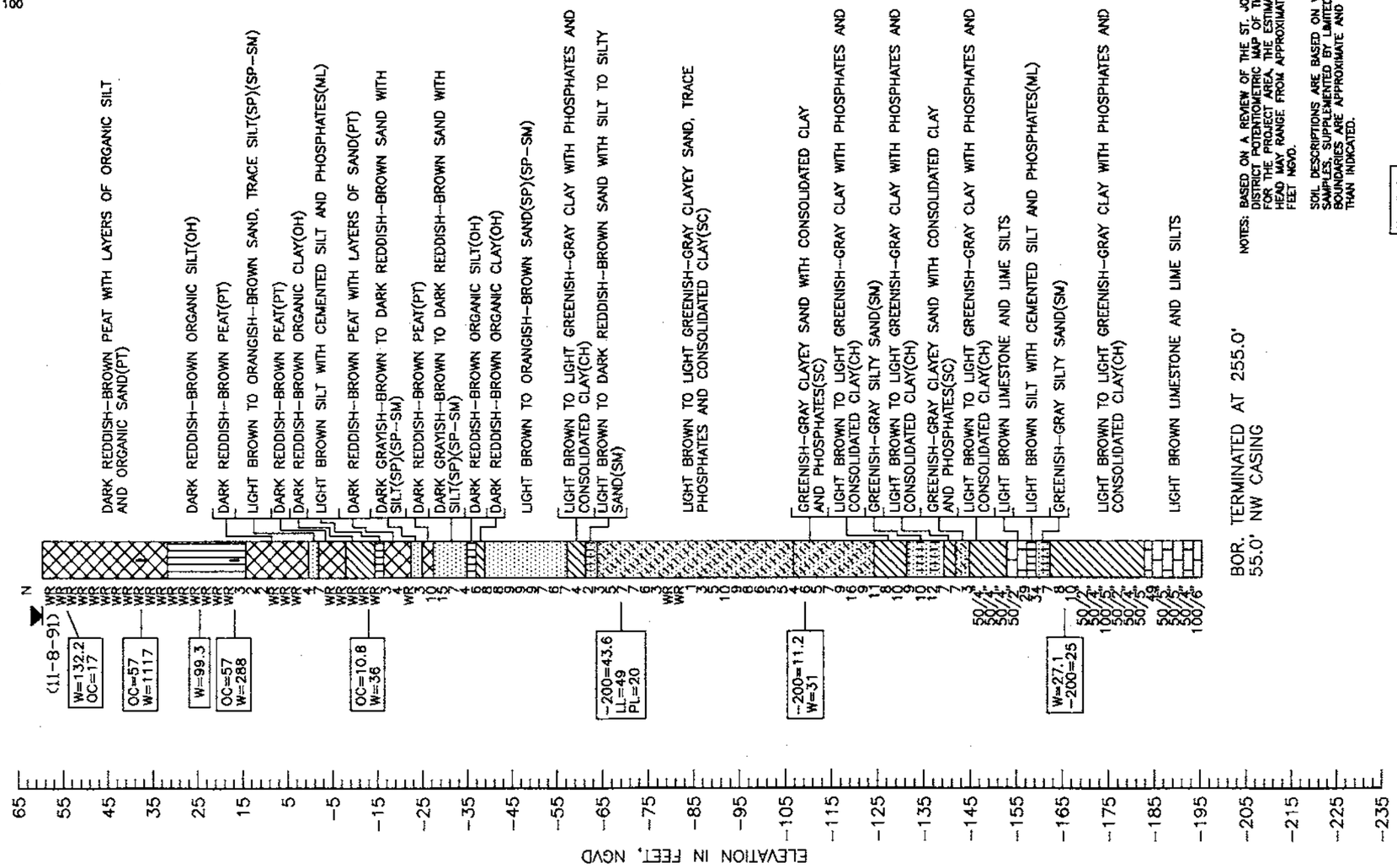

NOTES: BASED ON A REVIEW OF THE ST. JOHNS RIVER WATER MANAGEMENT DISTRICT POTENTIOMETRIC MAP OF THE UPPER FLORIDAN AQUIFER FOR THE PROJECT AREA, THE ESTIMATED ELEVATION OF THE ARTESIAN HEAD MAY RANGE FROM APPROXIMATELY ELEVATION +45 TO +50 FEET NGVD.

SOIL DESCRIPTIONS ARE BASED ON VISUAL EXAMINATION OF THE RECOVERED SAMPLES. SUPPLEMENTED BY LIMITED LABORATORY TESTING. STRATA BOUNDARIES ARE APPROXIMATE AND ACTUAL TRANSITION MAY BE MORE GRADUAL THAN INDICATED.

LEGEND

- SAND
- SILT
- SILTY SAND
- CLAYEY SAND
- CLAY
- PEAT
- LIMESTONE
- (SP) UNIFIED SOIL CLASSIFICATION GROUP SYMBOL
- (11-8-91) WATER (WITH DATE OF READING)
- N STANDARD PENETRATION RESISTANCE IN BLOWS PER FOOT UNLESS OTHERWISE NOTED
- WR FELL UNDER WEIGHT OF ROD
- LOCATION OF STANDARD PENETRATION TEST BORING
- * SURVEY DATA TO BE CONSIDERED APPROXIMATE
- LOCATION OF UNDISTURBED SHELBY TUBE SAMPLE

-200=0	FINES PASSING #200 SIEVE IN PERCENT
W=0	NATURAL MOISTURE CONTENT IN PERCENT
OC=0	ORGANIC CONTENT IN PERCENT
LL=0	LIQUID LIMIT IN PERCENT
PL=0	PLASTIC LIMIT IN PERCENT

STANDARD PENETRATION TEST DATA

SPOON INSIDE DIA.	1 3/8 IN.
SPOON OUTSIDE DIA.	2 IN.
AVG. HAMMER DROP	30 IN.
HAMMER WEIGHT	140 LBS.
HAMMER TYPE	SAFETY

NOTE: STRATA BOUNDARIES ARE APPROXIMATE AND MAY VARY BETWEEN OR AWAY FROM BORING LOCATIONS.

GRANULAR MATERIALS

RELATIVE DENSITY	SPT (BLOWS/FT.)
VERY LOOSE	LESS THAN 4
LOOSE	4-10
MEDIUM DENSE	10-30
DENSE	30-50
VERY DENSE	GREATER THAN 50

SILTS AND CLAYS

CONSISTENCY	SPT (BLOWS/FT.)
VERY SOFT	LESS THAN 2
SOFT	2-4
FIRM	4-8
STIFF	8-15
VERY STIFF	15-30
HARD	GREATER THAN 30

ENVIRONMENTAL CLASSIFICATION:

SUPERSTRUCTURE: SLIGHTLY AGGRESSIVE

SUBSTRUCTURE:
CONCRETE: EXTREMELY AGGRESSIVE (pH=4.3)
STEEL: EXTREMELY AGGRESSIVE (pH=4.3)

REVISIONS

Date	By	Description	Date	By	Description

	Names	Dates
Drawn by	DJM	1-1-92
Checked by	GK	1-1-92
Designed by	N/A	N/A
Checked by	N/A	N/A
Approved by	LPM	

ENGINEER OF RECORD:
LARRY P. MOORE, P.E. #47673
PSI
1875 LEE ROAD
WINTER PARK, FLORIDA 32789

LOGO: PSI Environmental Geotechnical Construction Consulting • Engineering • Testing

SEAL: 3-4-98

FLORIDA DEPARTMENT OF TRANSPORTATION
GEOTECHNICAL DESIGN OFFICE

ROAD NO.	COUNTY	PROJECT NO.
SR 414	SEMINOLE	77002-3503

SHEET TITLE: REPORT OF SPT BORINGS FOR STRUCTURE

Drawing No.

PROJECT NAME: MAITLAND BOULEVARD EXTENSION
S.R. 414 ; LAKE BOSSE BRIDGE

Index No.

PSI PROJECT No. 754-05280
FIGURE: 7

FED. ROAD NO.	STATE	PROJECT NO.	FISCAL YEAR	SHEET NO.
3	FLA.			8-9

NOTES: BASED ON A REVIEW OF THE ST. JOHNS RIVER WATER MANAGEMENT DISTRICT POTENTIOMETRIC MAP OF THE UPPER FLORIDAN AQUIFER FOR THE PROJECT AREA, THE ESTIMATED ELEVATION OF THE ARTESIAN HEAD MAY RANGE FROM APPROXIMATELY ELEVATION +45 TO +50 FEET NGVD.

SOIL DESCRIPTIONS ARE BASED ON VISUAL EXAMINATION OF THE RECOVERED SAMPLES, SUPPLEMENTED BY LIMITED LABORATORY TESTING. STRATA BOUNDARIES ARE APPROXIMATE AND ACTUAL TRANSITION MAY BE MORE GRADUAL THAN INDICATED.

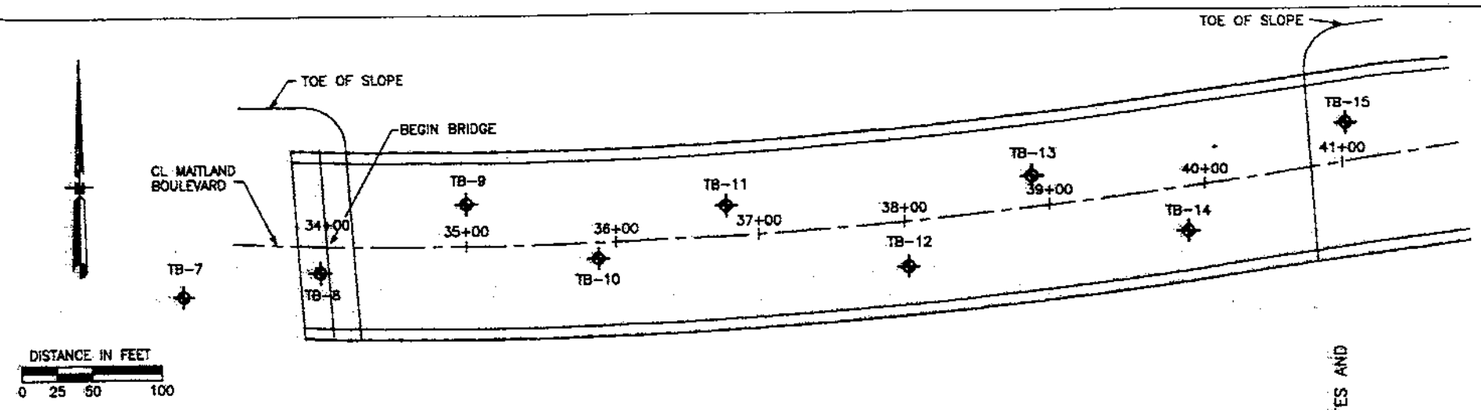

SECTION: 20
TOWNSHIP: 21 S
RANGE: 29 E

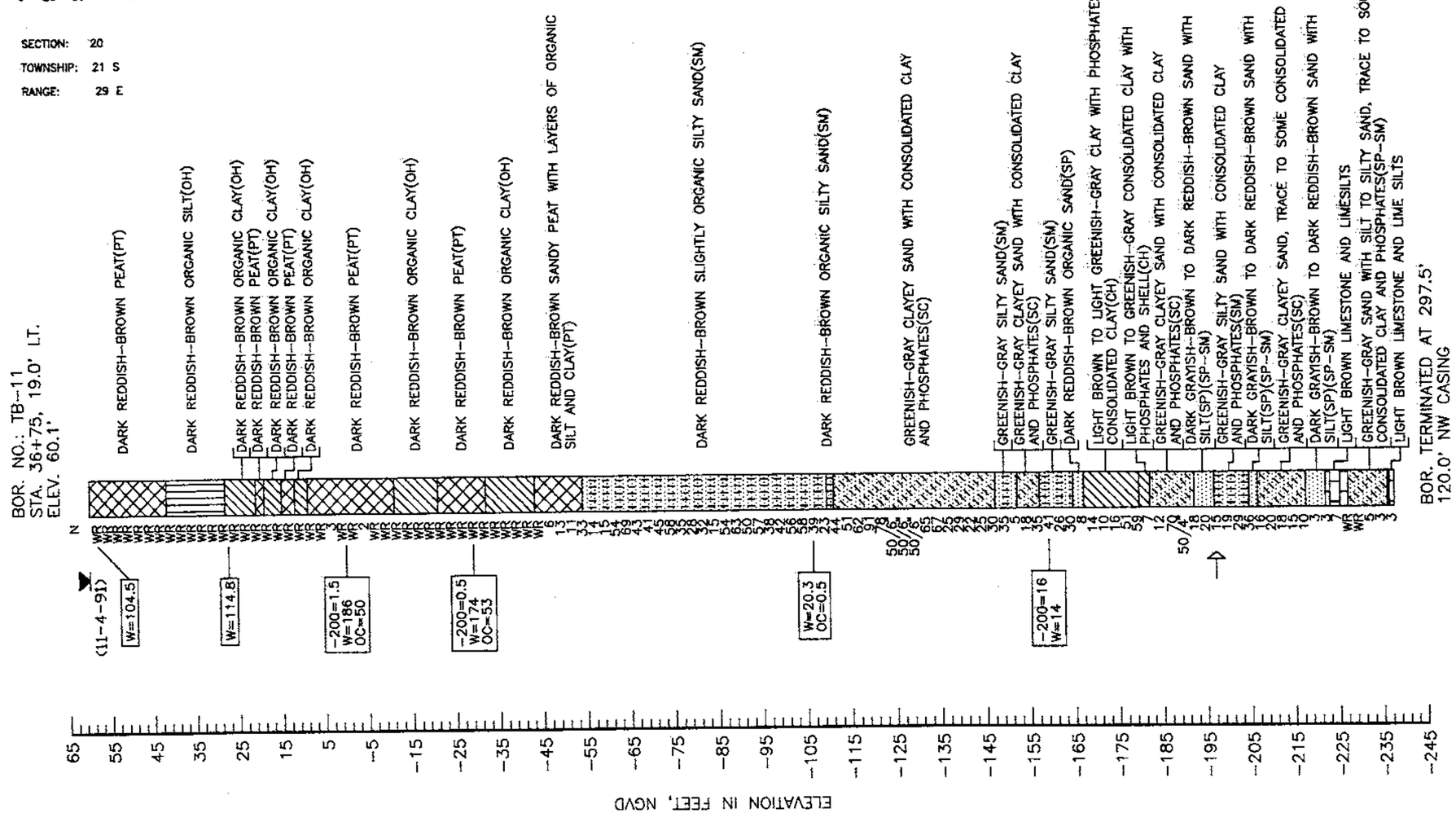

LEGEND

- SAND
- SILT
- SILTY SAND
- CLAYEY SAND
- CLAY
- PEAT
- LIMESTONE
- (SP) UNIFIED SOIL CLASSIFICATION GROUP SYMBOL
- (11-4-91) WATER (WITH DATE OF READING)
- N STANDARD PENETRATION RESISTANCE IN BLOWS PER FOOT UNLESS OTHERWISE NOTED
- WR FELL UNDER WEIGHT OF ROD
- CIRCULATION LOSS
- LOCATION OF STANDARD PENETRATION TEST BORING
- SURVEY DATA TO BE CONSIDERED APPROXIMATE
- -200=0 FINES PASSING #200 SIEVE IN PERCENT
- W=0 NATURAL MOISTURE CONTENT IN PERCENT
- OC=0 ORGANIC CONTENT IN PERCENT

STANDARD PENETRATION TEST DATA

SPOON INSIDE DIA.	1 3/8 IN.
SPOON OUTSIDE DIA.	2 IN.
AVG. HAMMER DROP	30 IN.
HAMMER WEIGHT	140 LBS.
HAMMER TYPE	SAFETY

NOTE: STRATA BOUNDARIES ARE APPROXIMATE AND MAY VARY BETWEEN OR AWAY FROM BORING LOCATIONS.

GRANULAR MATERIALS

RELATIVE DENSITY	SPT (BLOWS/FT.)
VERY LOOSE	LESS THAN 4
LOOSE	4-10
MEDIUM DENSE	10-30
DENSE	30-50
VERY DENSE	GREATER THAN 50

SILTS AND CLAYS

CONSISTENCY	SPT (BLOWS/FT.)
VERY SOFT	LESS THAN 2
SOFT	2-4
FIRM	4-8
STIFF	8-15
VERY STIFF	15-30
HARD	GREATER THAN 30

ENVIRONMENTAL CLASSIFICATION:

SUPERSTRUCTURE: SLIGHTLY AGGRESSIVE

SUBSTRUCTURE:
CONCRETE: EXTREMELY AGGRESSIVE (pH=4.3)
STEEL: EXTREMELY AGGRESSIVE (pH=4.3)

REVISIONS					
Date	By	Description	Date	By	Description

	Name	Date
Drawn by	DJW	1-1-02
Checked by	GK	1-1-02
Designed by	N/A	N/A
Checked by	N/A	N/A
Approved by	LPM	

ENGINEER OF RECORD:
LARRY P. MOORE, P.E. #47873
PSI
1675 LEE ROAD
WINTER PARK, FLORIDA 32789

LOGO: PSI Environmental Geotechnical Construction Consulting • Engineering • Testing

SEAL: 3-4-98

FLORIDA DEPARTMENT OF TRANSPORTATION
GEOTECHNICAL DESIGN OFFICE

ROAD NO.	COUNTY	PROJECT NO.
SR 414	SEMINOLE	77002-3503

SHEET TITLE: REPORT OF SPT BORINGS FOR STRUCTURE

PROJECT NAME: MAITLAND BOULEVARD EXTENSION
S.R. 414 ; LAKE BOSSE BRIDGE

Drawing No.

Index No.

PSI PROJECT No. 754-05260
FIGURE: 8

FED. ROAD DIV. NO.	STATE	PROJECT NO.	CONT. NO.	SHEET NO.
3	FLA.			B-10

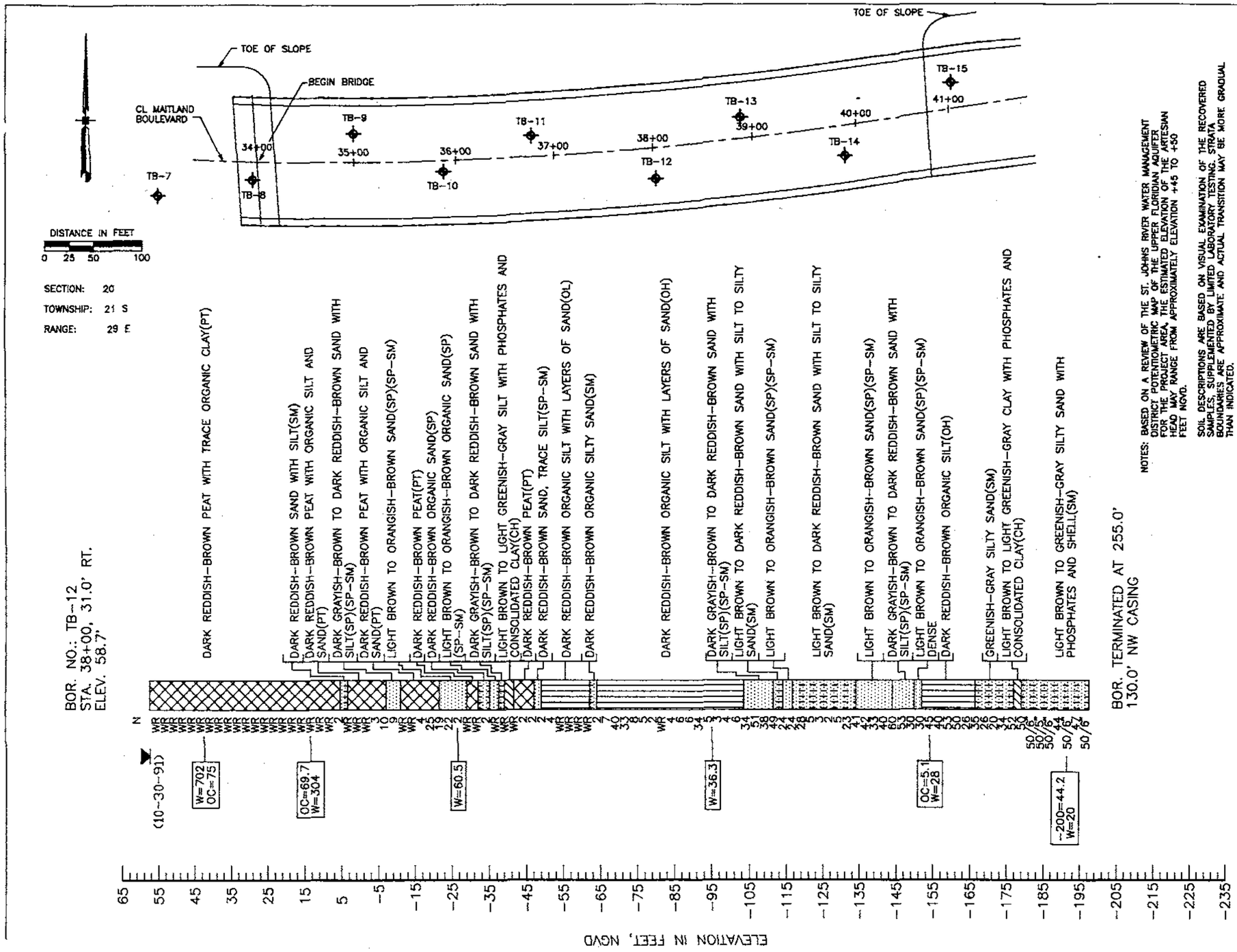

NOTES: BASED ON A REVIEW OF THE ST. JOHNS RIVER WATER MANAGEMENT DISTRICT POTENTIOMETRIC MAP OF THE UPPER FLORIDIAN AQUIFER FOR THE PROJECT AREA, THE ESTIMATED ELEVATION OF THE ARTESIAN HEAD MAY RANGE FROM APPROXIMATELY ELEVATION +45 TO +50 FEET NGVD.

SOIL DESCRIPTIONS ARE BASED ON VISUAL EXAMINATION OF THE RECOVERED SAMPLES, SUPPLEMENTED BY LIMITED LABORATORY TESTING. STRATA BOUNDARIES ARE APPROXIMATE AND ACTUAL TRANSITION MAY BE MORE GRADUAL THAN INDICATED.

LEGEND

- SAND
- SILT
- SILTY SAND
- CLAYEY SAND
- CLAY
- PEAT

(SP) UNIFIED SOIL CLASSIFICATION GROUP SYMBOL

(10-30-91) WATER (WITH DATE OF READING)

N STANDARD PENETRATION RESISTANCE IN BLOWS PER FOOT UNLESS OTHERWISE NOTED

WR FELL UNDER WEIGHT OF ROD

LOCATION OF STANDARD PENETRATION TEST BORING

* SURVEY DATA TO BE CONSIDERED APPROXIMATE

-200=0 FINES PASSING #200 SIEVE IN PERCENT
W=0 NATURAL MOISTURE CONTENT IN PERCENT
OC=0 ORGANIC CONTENT IN PERCENT

STANDARD PENETRATION TEST DATA

SPOON INSIDE DIA.	1 3/8 IN.
SPOON OUTSIDE DIA.	2 IN.
AVG. HAMMER DROP	30 IN.
HAMMER WEIGHT	140 LBS.
HAMMER TYPE	SAFETY

NOTE: STRATA BOUNDARIES ARE APPROXIMATE AND MAY VARY BETWEEN OR AWAY FROM BORING LOCATIONS.

GRANULAR MATERIALS

RELATIVE DENSITY	SPT (BLOWS/FT.)
VERY LOOSE	LESS THAN 4
LOOSE	4-10
MEDIUM DENSE	10-30
DENSE	30-50
VERY DENSE	GREATER THAN 50

SILTS AND CLAYS

CONSISTENCY	SPT (BLOWS/FT.)
VERY SOFT	LESS THAN 2
SOFT	2-4
FIRM	4-8
STIFF	8-15
VERY STIFF	15-30
HARD	GREATER THAN 30

ENVIRONMENTAL CLASSIFICATION:

SUPERSTRUCTURE: SLIGHTLY AGGRESSIVE

SUBSTRUCTURE:
CONCRETE: EXTREMELY AGGRESSIVE (pH=4.3)
STEEL: EXTREMELY AGGRESSIVE((pH=4.3)

REVISIONS

Date	By	Description	Date	By	Description

	Names	Dates
Drawn by	DMF	1-1-92
Checked by	GK	1-1-93
Designed by	N/A	N/A
Checked by	N/A	N/A
Approved by	LPM	

ENGINEER OF RECORD:
LARRY P. MOORE, P.E. #47673
PSI
1675 LEE ROAD
WINTER PARK, FLORIDA 32789

LOGO: PSI Environmental Geotechnical Construction — Consulting • Engineering • Testing

SEAL: 3-4-98

FLORIDA DEPARTMENT OF TRANSPORTATION
GEOTECHNICAL DESIGN OFFICE

ROAD NO.	COUNTY	PROJECT NO.
SR 414	SEMINOLE	77002-3503

SHEET TITLE: REPORT OF SPT BORINGS FOR STRUCTURE

PROJECT NAME: MAITLAND BOULEVARD EXTENSION
S.R. 414 ; LAKE BOSSE BRIDGE

Drawing No.

Index No.

PSI PROJECT No. 754-05260
FIGURE: 9

FED. ROAD DIV. NO.	STATE	PROJECT NO.	FOLDER NUMBER	SHEET NO.
3	FLA.			6-11

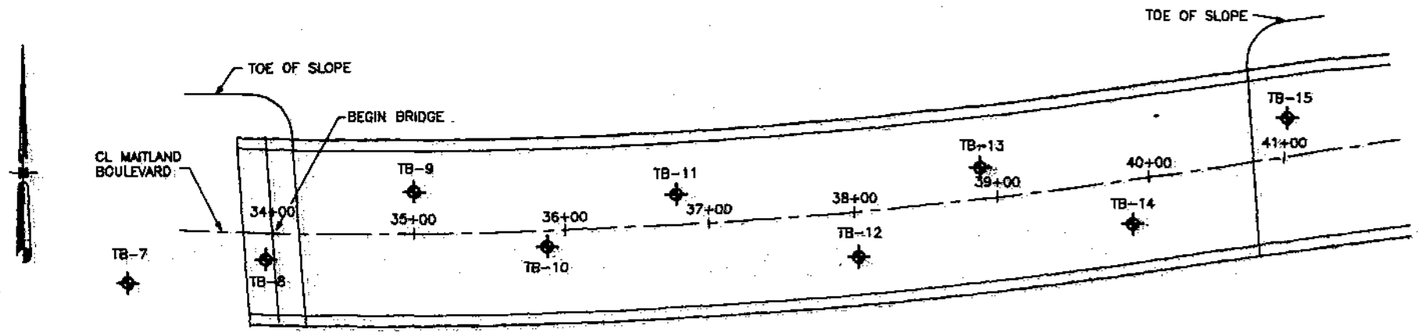

DISTANCE IN FEET
0 25 50 100

SECTION: 20
TOWNSHIP: 21 S
RANGE: 29 E

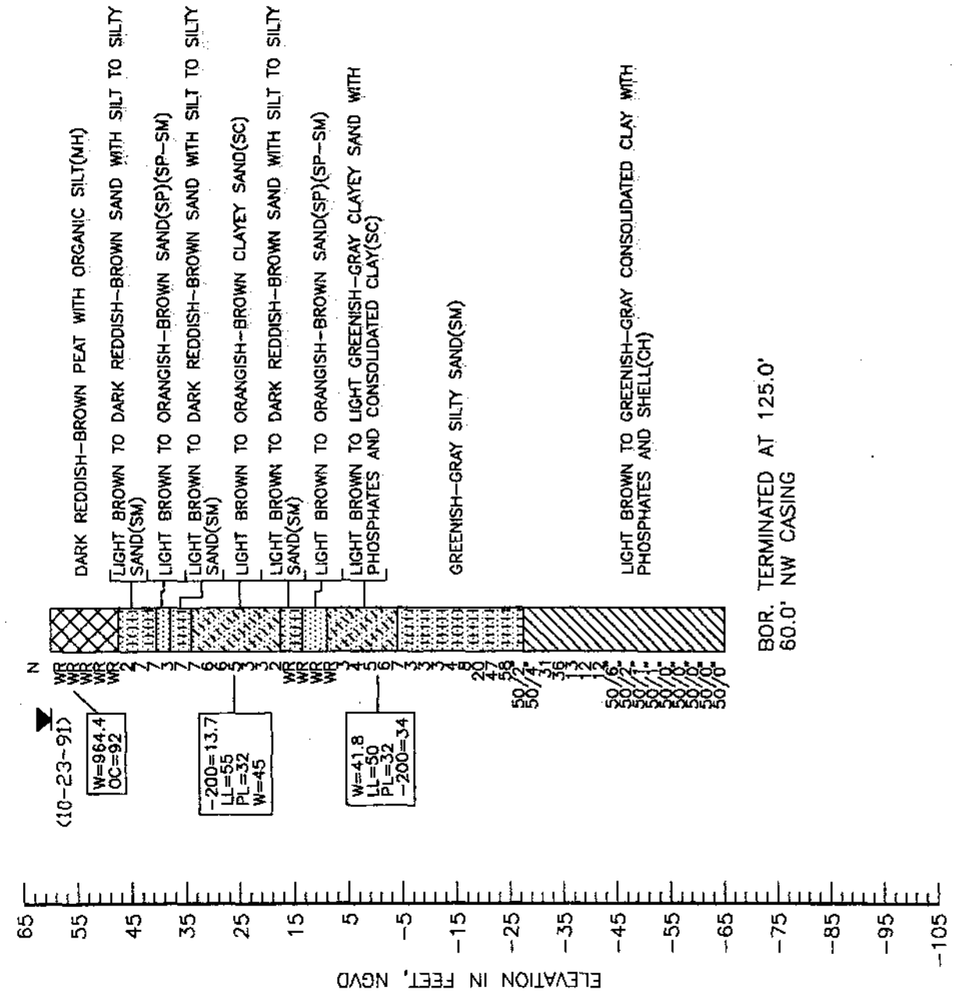

NOTES: BASED ON A REVIEW OF THE ST. JOHNS RIVER WATER MANAGEMENT DISTRICT POTENTIOMETRIC MAP OF THE UPPER FLORIDAN AQUIFER FOR THE PROJECT AREA, THE ESTIMATED ELEVATION OF THE ARTESIAN HEAD MAY RANGE FROM APPROXIMATELY ELEVATION +45 TO +50 FEET NGVD.

SOIL DESCRIPTIONS ARE BASED ON VISUAL EXAMINATION OF THE RECOVERED SAMPLES, SUPPLEMENTED BY LIMITED LABORATORY TESTING. STRATA BOUNDARIES ARE APPROXIMATE AND ACTUAL TRANSITION MAY BE MORE GRADUAL THAN INDICATED.

LEGEND

- SAND
- SILT
- SILTY SAND
- CLAYEY SAND
- CLAY
- PEAT

(SP) UNIFIED SOIL CLASSIFICATION GROUP SYMBOL

(10-23-91) WATER (WITH DATE OF READING)

N STANDARD PENETRATION RESISTANCE IN BLOWS PER FOOT UNLESS OTHERWISE NOTED

WR FELL UNDER WEIGHT OF ROD

LOCATION OF STANDARD PENETRATION TEST BORING

SURVEY DATA TO BE CONSIDERED APPROXIMATE

-200=0	FINES PASSING #200 SIEVE IN PERCENT
W=0	NATURAL MOISTURE CONTENT IN PERCENT
LL=0	LIQUID LIMIT IN PERCENT
PL=0	PLASTIC LIMIT IN PERCENT

STANDARD PENETRATION TEST DATA

SPOON INSIDE DIA.	1 3/8 IN.
SPOON OUTSIDE DIA.	2 IN.
AVG. HAMMER DROP	30 IN.
HAMMER WEIGHT	140 LBS.
HAMMER TYPE	SAFETY

NOTE: STRATA BOUNDARIES ARE APPROXIMATE AND MAY VARY BETWEEN OR AWAY FROM BORING LOCATIONS.

GRANULAR MATERIALS

RELATIVE DENSITY	SPT (BLOWS/FT.)
VERY LOOSE	LESS THAN 4
LOOSE	4-10
MEDIUM DENSE	10-30
DENSE	30-50
VERY DENSE	GREATER THAN 50

SILTS AND CLAYS

CONSISTENCY	SPT (BLOWS/FT.)
VERY SOFT	LESS THAN 2
SOFT	2-4
FIRM	4-8
STIFF	8-15
VERY STIFF	15-30
HARD	GREATER THAN 30

ENVIRONMENTAL CLASSIFICATION:

SUPERSTRUCTURE: SLIGHTLY AGGRESSIVE

SUBSTRUCTURE:
CONCRETE: EXTREMELY AGGRESSIVE (pH=4.3)
STEEL: EXTREMELY AGGRESSIVE (pH=4.3)

REVISIONS

Date	By	Description	Date	By	Description

	Name	Date
Drawn by	DJW	1-1-92
Checked by	GK	1-1-92
Designed by	N/A	N/A
Checked by	N/A	N/A
Approved by	LPM	

ENGINEER OF RECORD:
LARRY P. MOORE, P.E. #47873
PSI
1875 LEE ROAD
WINTER PARK, FLORIDA 32789

LOGO: PSI Environmental Geotechnical Construction Consulting • Engineering • Testing

SEAL: 3-4-98

FLORIDA DEPARTMENT OF TRANSPORTATION
GEOTECHNICAL DESIGN OFFICE

ROAD NO.	COUNTY	PROJECT NO.
SR 414	SEMINOLE	77002-3503

SHEET TITLE: REPORT OF SPT BORINGS FOR STRUCTURE

Drawing No.

PROJECT NAME: MAITLAND BOULEVARD EXTENSION
S.R. 414 ; LAKE BOSSE BRIDGE

Index No.

PSI PROJECT No. 754-05260
FIGURE: 10

FED. ROAD DIV. NO.	STATE	PROJECT NO.	FISCAL YEAR	SHEET NO.
3	FLA.			B-12

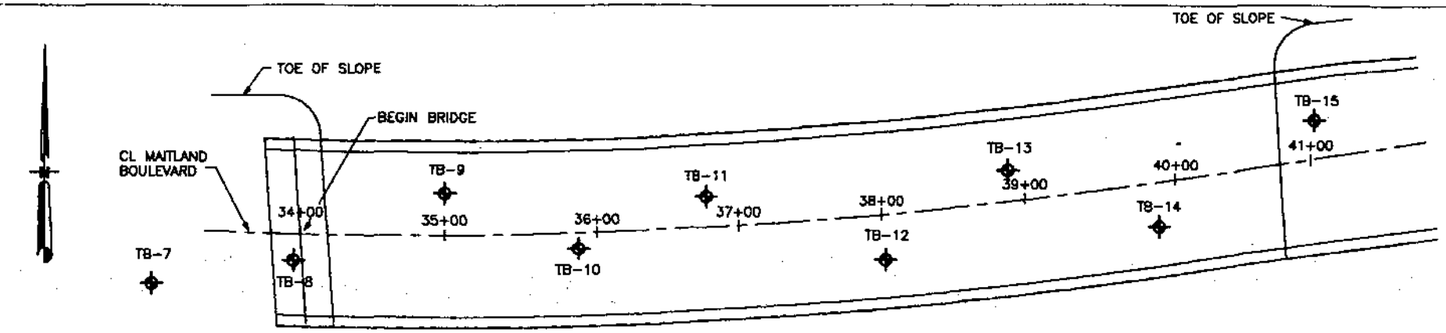

DISTANCE IN FEET
0 25 50 100

SECTION: 20
TOWNSHIP: 21 S
RANGE: 29 E

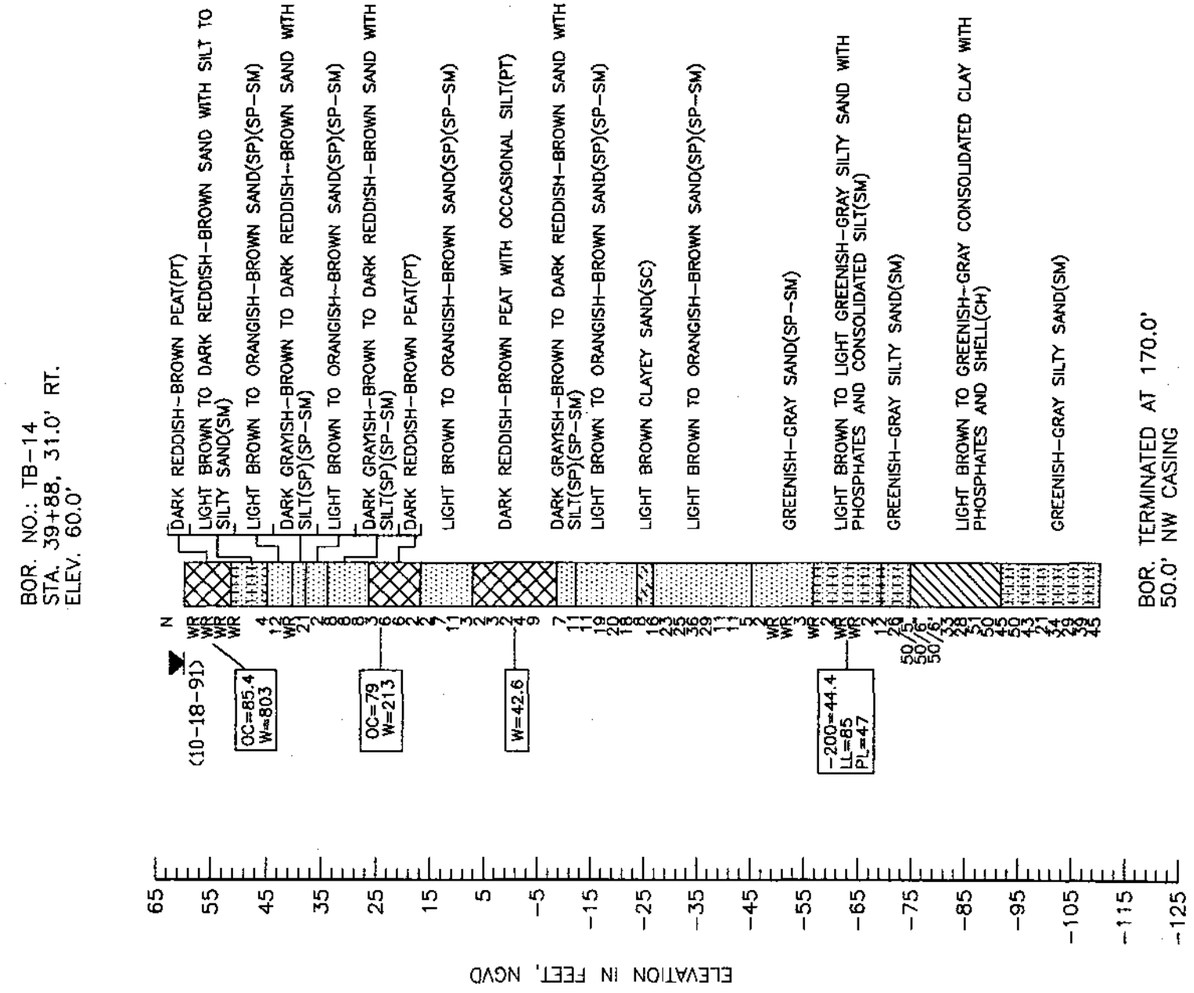

NOTES: BASED ON A REVIEW OF THE ST. JOHNS RIVER WATER MANAGEMENT DISTRICT POTENTIOMETRIC MAP OF THE UPPER FLORIDAN AQUIFER FOR THE PROJECT AREA, THE ESTIMATED ELEVATION OF THE ARTESIAN HEAD MAY RANGE FROM APPROXIMATELY ELEVATION +45 TO +50 FEET NGVD.

SOIL DESCRIPTIONS ARE BASED ON VISUAL EXAMINATION OF THE RECOVERED SAMPLES, SUPPLEMENTED BY LIMITED LABORATORY TESTING. STRATA BOUNDARIES ARE APPROXIMATE AND ACTUAL TRANSITION MAY BE MORE GRADUAL THAN INDICATED.

LEGEND

- SAND
- SILTY SAND
- CLAYEY SAND
- CLAY
- PEAT
- (SP) UNIFIED SOIL CLASSIFICATION GROUP SYMBOL
- (10-18-91) WATER (WITH DATE OF READING)
- N STANDARD PENETRATION RESISTANCE IN BLOWS PER FOOT UNLESS OTHERWISE NOTED
- WR FELL UNDER WEIGHT OF ROD
- LOCATION OF STANDARD PENETRATION TEST BORING
- * SURVEY DATA TO BE CONSIDERED APPROXIMATE
- -200=0 FINES PASSING #200 SIEVE IN PERCENT
- W=0 NATURAL MOISTURE CONTENT IN PERCENT
- OC=0 ORGANIC CONTENT IN PERCENT
- PL=0 PLASTIC LIMIT IN PERCENT
- LL=0 LIQUID LIMIT IN PERCENT

STANDARD PENETRATION TEST DATA

SPOON INSIDE DIA.	1 3/8 IN.
SPOON OUTSIDE DIA.	2 IN.
AVG. HAMMER DROP	30 IN.
HAMMER WEIGHT	140 LBS.
HAMMER TYPE	SAFETY

NOTE: STRATA BOUNDARIES ARE APPROXIMATE AND MAY VARY BETWEEN OR AWAY FROM BORING LOCATIONS.

GRANULAR MATERIALS

RELATIVE DENSITY	SPT (BLOWS/FT.)
VERY LOOSE	LESS THAN 4
LOOSE	4-10
MEDIUM DENSE	10-30
DENSE	30-50
VERY DENSE	GREATER THAN 50

SILTS AND CLAYS

CONSISTENCY	SPT (BLOWS/FT.)
VERY SOFT	LESS THAN 2
SOFT	2-4
FIRM	4-8
STIFF	8-15
VERY STIFF	15-30
HARD	GREATER THAN 30

ENVIRONMENTAL CLASSIFICATION:

SUPERSTRUCTURE: SLIGHTLY AGGRESSIVE

SUBSTRUCTURE:
CONCRETE: EXTREMELY AGGRESSIVE (pH=4.3)
STEEL: EXTREMELY AGGRESSIVE (pH=4.3)

REVISIONS

Date	By	Description	Date	By	Description

	Names	Dates
Drawn by	DJW	1-1-92
Checked by	GK	1-1-92
Designed by	N/A	N/A
Checked by	N/A	N/A
Approved by	LPM	

ENGINEER OF RECORD:
LARRY P. MOORE, P.E. #47673
PSI
1675 LEE ROAD
WINTER PARK, FLORIDA 32789

LOGO: PSI Environmental Geotechnical Construction
Consulting • Engineering • Testing

SEAL: #47673 3-4-98

FLORIDA DEPARTMENT OF TRANSPORTATION
GEOTECHNICAL DESIGN OFFICE

ROAD NO.	COUNTY	PROJECT NO.
SR 414	SEMINOLE	77002-3503

SHEET TITLE: REPORT OF SPT BORINGS FOR STRUCTURE

PROJECT NAME: MAITLAND BOULEVARD EXTENSION
S.R. 414 ; LAKE BOSSE BRIDGE

Drawing No.

Index No.

PSI PROJECT No. 754-05260
FIGURE: 11

FED. ROAD DIV. NO.	STATE	PROJECT NO.	FISCAL YEAR	SHEET NO.
3	FLA.			B-13

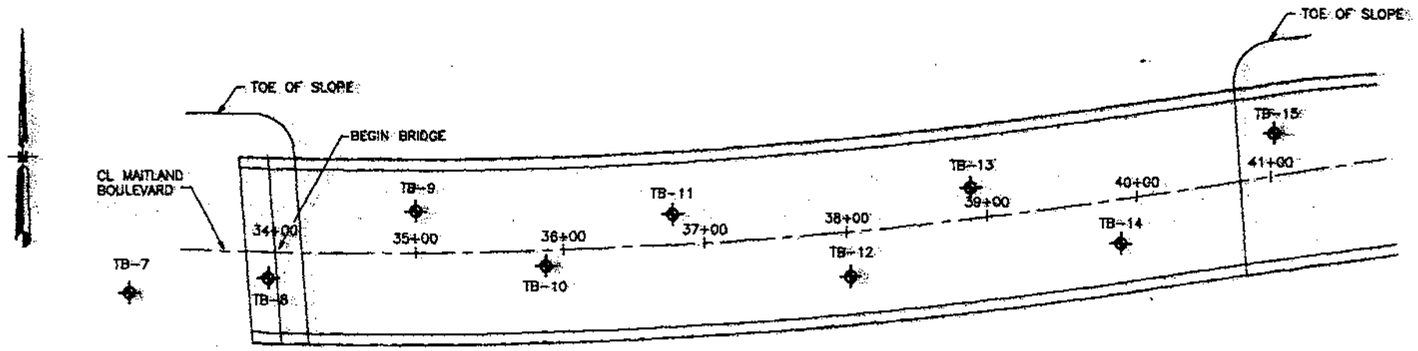

DISTANCE IN FEET
0 25 50 100

SECTION: 20
TOWNSHIP: 21 S
RANGE: 29 E

BOR. NO.: TB-15
STA. 41+00, 25.0' LT.
ELEV. 60.5'

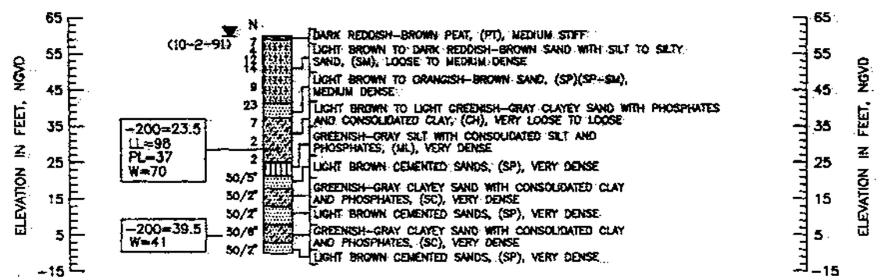

BOR. TERMINATED AT 60.0'
30.0' NW CASING

NOTES: BASED ON A REVIEW OF THE ST. JOHNS RIVER WATER MANAGEMENT DISTRICT POTENTIOMETRIC MAP OF THE UPPER FLORIDIAN AQUIFER FOR THE PROJECT AREA, THE ESTIMATED ELEVATION OF THE ARTESIAN HEAD MAY RANGE FROM APPROXIMATELY ELEVATION +45 TO +50 FEET NGVD.

SOIL DESCRIPTIONS ARE BASED ON VISUAL EXAMINATION OF THE RECOVERED SAMPLES, SUPPLEMENTED BY LIMITED LABORATORY TESTING. STRATA BOUNDARIES ARE APPROXIMATE AND ACTUAL TRANSITION MAY BE MORE GRADUAL THAN INDICATED.

LEGEND

- SILT
- SAND
- SILTY SAND
- CLAYEY SAND
- PEAT

(SP) UNIFIED SOIL CLASSIFICATION GROUP SYMBOL

(10-2-91) WATER (WITH DATE OF READING)

N STANDARD PENETRATION RESISTANCE IN BLOWS PER FOOT UNLESS OTHERWISE NOTED

WR FELL UNDER WEIGHT OF ROD

LOCATION OF STANDARD PENETRATION TEST BORING

-200=0 FINES PASSING NO. 200 IN PERCENT
W=0 NATURAL MOISTURE CONTENT IN PERCENT
LL=0 LIQUID LIMIT IN PERCENT
PL=0 PLASTIC LIMIT IN PERCENT

STANDARD PENETRATION TEST DATA

SPOON INSIDE DIA.	1 3/8 IN.
SPOON OUTSIDE DIA.	2 IN.
AVG. HAMMER DROP	30 IN.
HAMMER WEIGHT	140 LBS.
HAMMER TYPE	SAFETY

NOTE: STRATA BOUNDARIES ARE APPROXIMATE AND MAY VARY BETWEEN OR AWAY FROM BORING LOCATIONS.

GRANULAR MATERIALS

RELATIVE DENSITY	SPT (BLOWS/FT.)
VERY LOOSE	LESS THAN 4
LOOSE	4-10
MEDIUM DENSE	10-30
DENSE	30-50
VERY DENSE	GREATER THAN 50

SILTS AND CLAYS

CONSISTENCY	SPT (BLOWS/FT.)
VERY SOFT	LESS THAN 2
SOFT	2-4
FIRM	4-8
STIFF	8-15
VERY STIFF	15-30
HARD	GREATER THAN 30

ENVIRONMENTAL CLASSIFICATION:

SUPERSTRUCTURE: SLIGHTLY AGGRESSIVE

SUBSTRUCTURE:
CONCRETE: EXTREMELY AGGRESSIVE (pH=4.3)
STEEL: EXTREMELY AGGRESSIVE (pH=4.3)

REVISIONS

Date	By	Description	Date	By	Description

	Name	Date
Drawn by	DJW	1-1-92
Checked by	GK	1-1-92
Designed by	N/A	N/A
Checked by	N/A	N/A
Approved by	LPM	

ENGINEER OF RECORD:
LARRY P. MOORE, P.E. #47873
PSI
1675 LEE ROAD
WINTER PARK, FLORIDA 32789

LOGO: PSI Environmental Geotechnical Construction Consulting • Engineering • Testing

SEAL: 3-4-98

FLORIDA DEPARTMENT OF TRANSPORTATION
GEOTECHNICAL DESIGN OFFICE

ROAD NO.	COUNTY	PROJECT NO.
SR 414	SEMINOLE	77002-3503

SHEET TITLE: REPORT OF SPT BORINGS FOR STRUCTURE

PROJECT NAME: MAITLAND BOULEVARD EXTENSION
S.R. 414 ; LAKE BOSSE BRIDGE

Drawing No.

Index No.

PSI PROJECT No. 754-05260
FIGURE: 12

FED. ROAD DIV. NO.	STATE	PROJECT NO.	FISCAL YEAR	SHEET NO.
3	FLA.		98	B-14

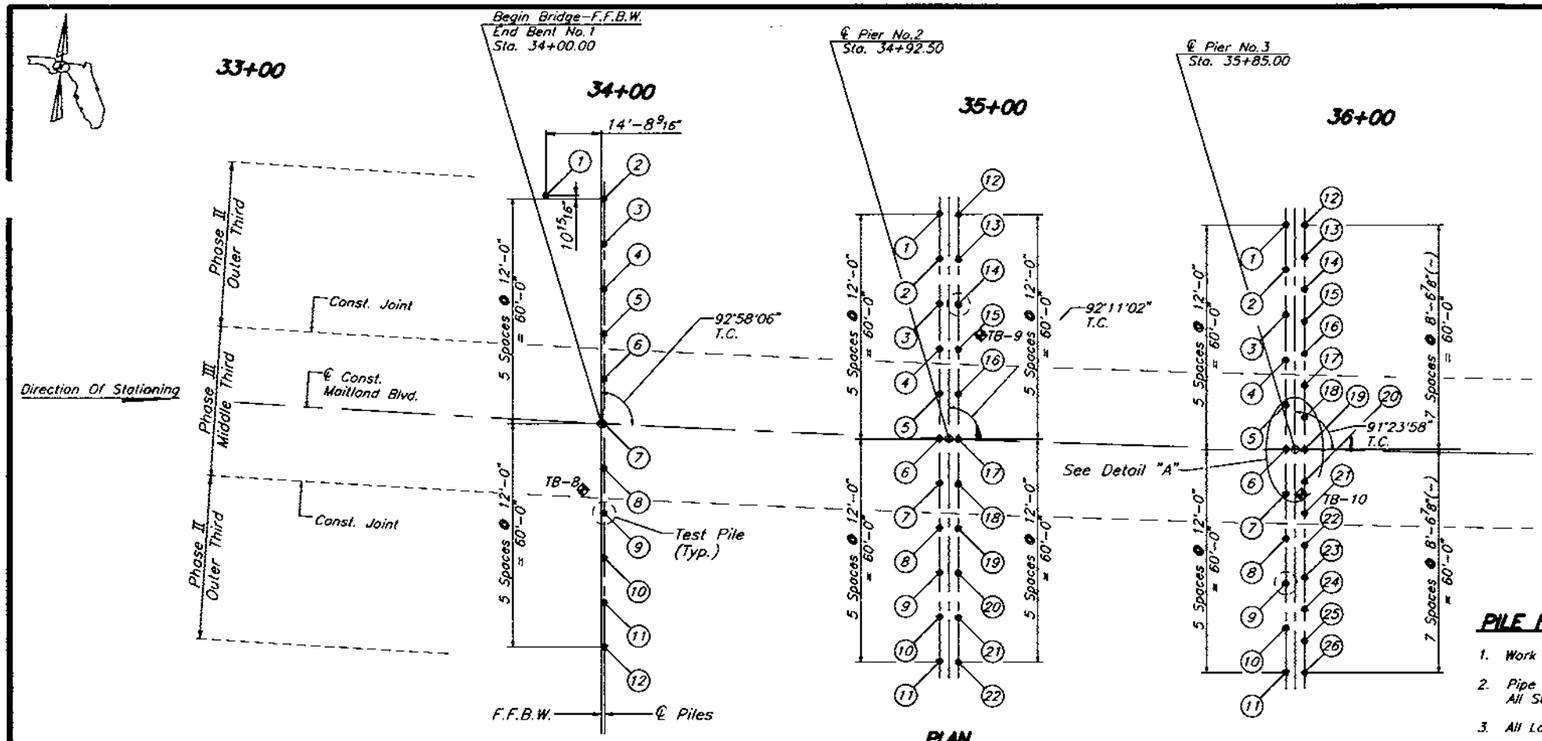

PLAN

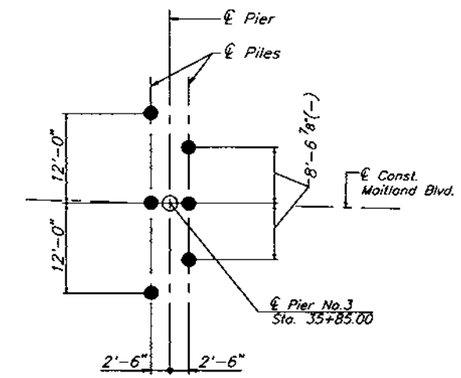

DETAIL "A"

Pier No. 3 Shown
Pier No. 4 Opposite Hand

LEGEND

- (1) Pile Number
- ● Proposed Piles
- (◉) Test Pile
- ◈ Approximate SPT Boring

CURVE DATA (3A)

Δ = 07°43'27" Lt.
D = 00°50'53"
T = 456.08'
L = 910.77'
R = 6755.80'
e = NORMAL/CROWN
P.C. Sta. = 32+09.23 (Ahead)
P.I. Sta. = 36+65.30
P.R.C. Sta. = 41+20.00

PILE CUT-OFF ELEVATIONS

PILE NO.	LOCATION		
	END BENT NO.1	PIER NO.2	PIER NO.3
1	66.50	67.30	65.80
2	66.50	67.50	66.10
3	66.70	67.80	66.30
4	67.00	68.00	66.60
5	67.20	68.30	66.80
6	67.50	68.50	67.10
7	67.70	68.30	66.80
8	67.50	68.00	66.60
9	67.30	67.80	66.30
10	67.00	67.50	66.10
11	66.80	67.30	65.80
12	66.50	67.30	65.80
13	–	67.50	66.00
14	–	67.80	66.20
15	–	68.00	66.40
16	–	68.30	66.50
17	–	68.50	66.70
18	–	68.30	66.90
19	–	68.00	67.10
20	–	67.80	66.90
21	–	67.50	66.70
22	–	67.30	66.50
23	–	–	66.40
24	–	–	66.20
25	–	–	66.00
26	–	–	65.80
27	–	–	–
28	–	–	–

PILE INSTALLATION TABLE

Pier Or Bent (d)	Pile Size Dia. (in.)	Design Load (Tons)	Min. Tip Elevation (Ft.) (c)	Scour Elevation (Ft.)	Total Scour Resistance (Tons) (a)	Total Down Drag (Tons)	Required Preform Elevation (Ft.) See Note 11	Required Jet Elevation (Ft.) (d)	Net Scour Resistance (Tons) (b)	Test Pile Lengths (Ft.)
1	20	130	+30	NA	NA	50	NA	NA	NA	90
2	20	130	−100	NA	NA	25	−100	NA	NA	240
3	20	130	−100	NA	NA	25	−100	NA	NA	260
4	20	130	−100	NA	NA	25	−100	NA	NA	270
5	20	130	−20	NA	NA	25	−20	NA	NA	180
6	20	130	−50	NA	NA	25	−50	NA	NA	180
7	20	130	+25	NA	NA	50	NA	+40	NA	90

RDR = (Design Load x F.S.) + (Downdrag) + (Scour Resistance)

(a) Total Side Friction Resistance From Ground Line To The Scour Elevation. For This Project Anticipated Scour Is Minimal, Therefore Neglected.
(b) Net Side Friction Resistance From The Required Preformed Or Jetting Elevation To The Scour Elevation.
(c) Minimum Tip Elevations Have Been Established To Insure The Pile Tip Penetrates Loose Or Compressible Soil Zones And Bears On Compentent Material.
(d) When A Required Jetting Elevation Is Shown, The Jet Shall Be Lowered To The Elevation And Continue To Operate At This Elevation Until The Pile Driving Is Completed. If Jetting Or Preforming Elevations Differ From Those Shown On The Table, The Engineer Shall Be Responsible For Determination Of The Required Driving Resistance. See Note 17.

PILE NOTES :

1. Work The Foundation Layout Sheet With Construction Sequence Sheet.
2. Pipe Piles Shall Be 20" Outside Diameter With A 0.5" Minimum Wall Thickness And Shall Be New And Straight. All Steel Shall Conform To ASTM A 252, Grade 3. Ends Of Pipe Sections Shall Be Perpendicular To The Longitudinal Axis.
3. All Locating Dimensions Are Measured To The F.F.B.W. Or C/L Of Pier See Detail "A" (Shl. B-14),"B" & "C" (Shl. B-15)
4. SPLICES: The Ends Of All Pile Sections To Be Spliced Shall Be Beveled And Fully Butt-Welded As Shown On Sheet B-15 In Accordance With AWS/AASHTO Welding Code. All Splices Shall Be Watertight. Splice Pile With Carbon Steel Split Backing Rings With Pins. Provide Associated Pile Fittings Model S-4000 Or Approved Equal.
5. All Piles Are Plumb.
6. Test Piles Shall Not Be Driven Until Approval Of The Engineer Is Obtained.
7. Drive One Test Pile In The Position Of A Permanent Plumb Pile At Each End Bent, And At Each Pier. (See Pile Installation Table And Plan)
8. The Portion Of The End Bent Piles Within The Embankment (Above Existing Grade) Shall Be Wrapped With Two Independent Sheets Of 6 Mil Polyethylene In Accordance With Specification 459.
9. All Piles And Pile Driving Operations Shall Be In Accordance With Specification Section A455 And Technical Special Provisions.
10. Pile Shall Be Filled According to Technical Special Provision Section A455. Cost Of Furnishing And Placing Pile Fill Shall Be Included In The Contract Unit Price For Pile Driven.
11. See Technical Special Provisions For Construction And Vibration Monitoring. Special Measures Will Be Required For Preforming As Outlined In The Technical Special Provisions.
12. PILE POINT PROTECTION: All Steel Piles Shall Be Equipped With A Open End Cutting Shoe, Inside Fit With Class I Heat Treated Tip. Open End Cutting Shoe Shall Be In Accordance With Specification Section A455.
13. PILE CUT-OFF: Steel Pipe Piles Shall Be Cut Off At The Required Elevations Along A Plane Normal To The Axis Of The Pile. Methods Used In Cutting Off Piles Shall Meet With The Approval Of The Engineer.
14. MILL TEST REPORTS: Notarized Mill Test Report Shall Be Required For All Steel Pipe Piles.
15. SHOP DRAWINGS: The Contractor Shall Submit Shop Drawings For Steel Pipe Piles, Pile Point Protection And Splice Details For The Engineers Approval Prior To Fabrication.
16. Pier Piles Shall Be Painted From Proposed Ground To Bottom Of Pier Cap.
17. For Preformed Pile Holes And/Or Jetting At The Piers The Contractor Shall Use, Turbidity Control Measures (i.e. Containment Boxes/Collars, Casings, Culvert Pipes, Etc.) Which Satisfy The Minimum Requirements Of The Permitting Agencies. Standard Floating Silt Curtains Will Not Be Sufficient. The Contractor Shall Submit Turbidity Control Plan To The Engineer For Approval Prior To Starting Any Work Relating To Preformed Pile Holes And/or Pile Jetting. The Cost Of All Materials And Labor Associated With Turbidity Control Measures Shall Be Included With Bid Item No. 455-8-34, Pile Driven.
18. PAYMENT: Furnishing Steel Pipe Piles Shall Be Paid For Per Linear Foot, Item No. 455-7-34. The Cost Of Driving Piles Shall Be Paid For Per Linear Foot, Item No. 455-8-34 And Shall Include The Cost Of Concrete, Sand, Pile Point Protection, Painting, Turbidity Control Measures, And Reinforcement. Payment For Splices Shall Be Included Under Pay Item For Item No. 455-17-34. Payment Of Polyethelene Sheeting Shall Be Included Under The Pay Item No. 459-71.

REVISIONS

Date	By	Description	Date	By	Description

	Notes	Dates
Drawn by	JLA/JJS	3/96
Checked by	MKA	3/96
Designed by	MKA	3/96
Checked by	PM	3/96
Approved by	Peeter Mannik, P.E.	

ENGINEER OF RECORD:
DYER, RIDDLE, MILLS AND PRECOURT, INC.
1605 EAST COLONIAL DRIVE
ORLANDO, FLORIDA 32803

LOGO: DRMP DYER, RIDDLE, MILLS & PRECOURT, INC. ENGINEERS · SURVEYORS

SEAL: Peeter Mannik 3/4/98

FLORIDA DEPARTMENT OF TRANSPORTATION
STRUCTURES DESIGN OFFICE

ROAD NO.	COUNTY	PROJECT NO.
SR414	SEMINOLE	77002-3503

SHEET TITLE: FOUNDATION LAYOUT

PROJECT NAME: MAITLAND BOULEVARD OVER LAKE BOSSE

Drawing No. 1 OF 2

Index No.

JA/:502/24/98 - 1:42PM - H:\0008P\LKB\LKBFND.DWG

FED. ROAD DIV. NO.	STATE	PROJECT NO.	FISCAL YEAR	SHEET NO.
3	FLA.		98	8-15

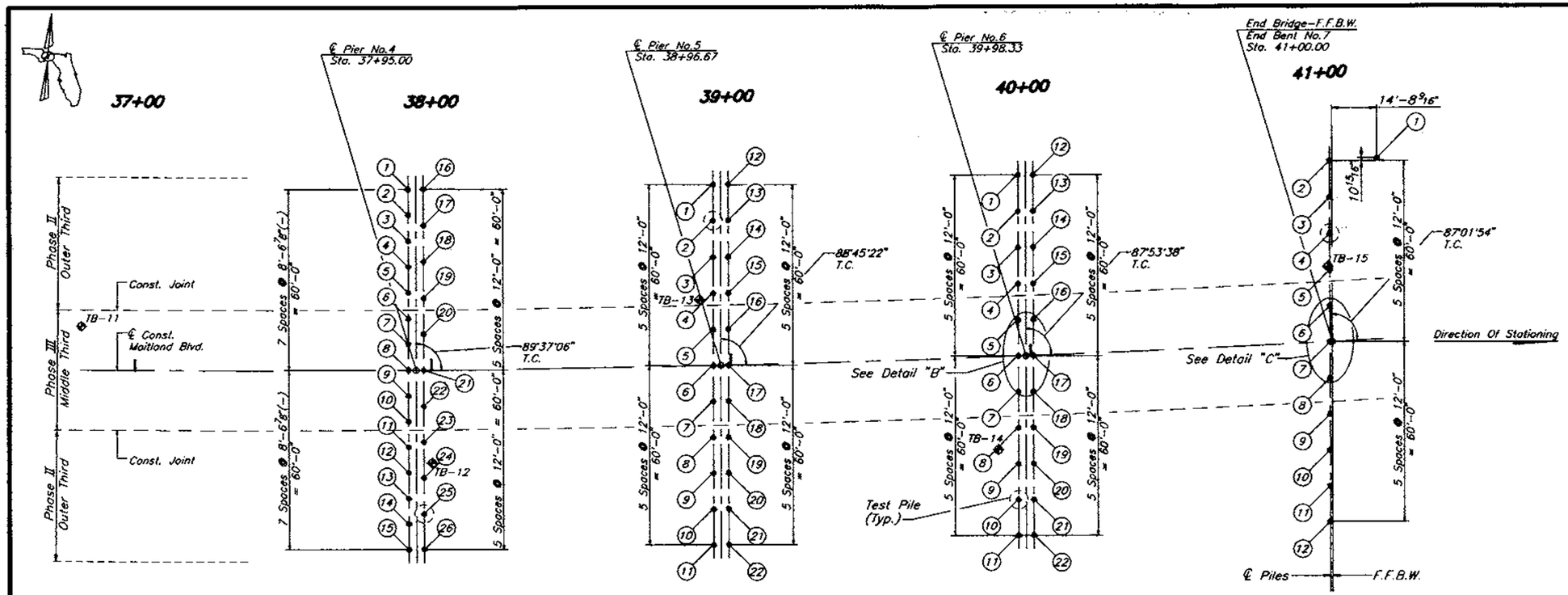

PLAN

LEGEND

- (1) Pile Number
- ● Proposed Piles
- (◉) Test Pile
- ◆ Approximate SPT Boring

CURVE DATA (3A)

Δ = 07°43'27" Lt.
D = 00°50'53"
T = 456.08'
L = 910.77'
R = 6755.80'
e = NORMAL/CROWN
P.C. Sta. = 32+09.23 (Ahead)
P.R.C. Sta. = 41+20.00

PILE CUT-OFF ELEVATIONS

PILE NO.	LOCATION			
	PIER NO.4	PIER NO.5	PIER NO.6	END BENT NO.7
1	65.80	67.10	66.30	65.40
2	66.00	67.40	66.60	65.40
3	66.20	67.60	66.80	65.70
4	66.40	67.90	67.10	65.90
5	66.60	68.10	67.30	66.20
6	66.70	68.30	67.60	66.40
7	66.90	68.10	67.40	66.60
8	67.10	67.90	67.10	66.40
9	66.90	67.60	66.90	66.20
10	66.70	67.40	66.60	65.90
11	66.60	67.10	66.40	65.70
12	66.40	67.10	66.30	65.50
13	66.20	67.40	66.60	–
14	66.00	67.60	66.80	–
15	65.80	67.90	67.10	–
16	65.80	68.10	67.30	–
17	66.10	68.30	67.60	–
18	66.30	68.10	67.40	–
19	66.60	67.90	67.10	–
20	66.80	67.60	66.90	–
21	67.10	67.40	66.60	–
22	66.80	67.10	66.40	–
23	66.60	–	–	–
24	66.30	–	–	–
25	66.10	–	–	–
26	65.80	–	–	–

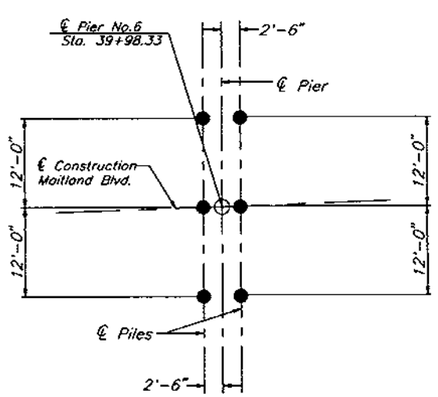

DETAIL "B"

Typ. ● Pier Nos. 2, 5 and 6

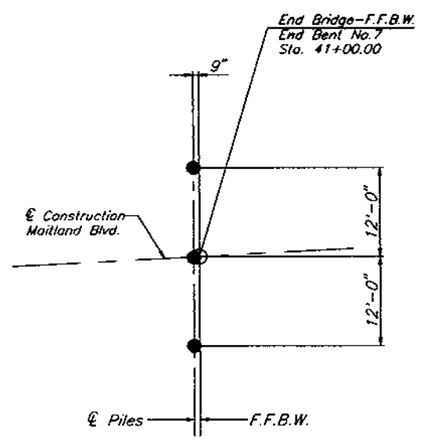

DETAIL "C"

End Bent No. 7 Shown
End Bent No. 1 Opp. Hand

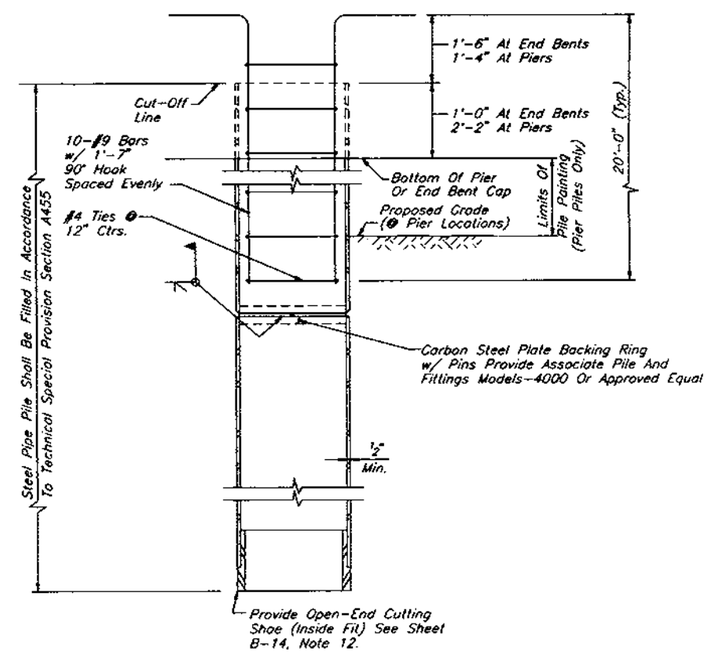

TYPICAL STEEL PIPE PILE SECTION

REVISIONS					
Date	By	Description	Date	By	Description

	Names	Dates
Drawn by	JLA/JJS	3/96
Checked by	MKA	3/96
Designed by	MKA	3/96
Checked by	PM	3/96
Approved by	Peeter Mannik, P.E.	

ENGINEER OF RECORD:
DYER, RIDDLE, MILLS AND PRECOURT, INC.
1608 EAST COLONIAL DRIVE
ORLANDO, FLORIDA 32803

LOGO: DRMP

SEAL: Peeter Mannik 3/4/98

FLORIDA DEPARTMENT OF TRANSPORTATION
STRUCTURES DESIGN OFFICE

ROAD NO.	COUNTY	PROJECT NO.
SR414	SEMINOLE	77002-3503

SHEET TITLE: FOUNDATION LAYOUT

PROJECT NAME: MAITLAND BOULEVARD OVER LAKE BOSSE

Drawing No. 2 OF 2

Index No.

JA/JS02/07/97 4:05PM M:\000BPK\LKB\LKBFND.DWG

FED. ROAD DIV. NO.	STATE	PROJECT NO.	FISCAL YEAR	SHEET NO.
3	FLA.		98	B-16

ESTIMATED QUANTITIES

ITEM		UNIT	QUANTITY END BENT 1 PHASE II	QUANTITY END BENT 1 PHASE III
Class IV Concrete (Substructure)	Pedestals	C.Y.	1.36	0.51
	Cap		33.00	15.29
	Walls		34.34	9.85
	Total		68.70	25.65
Reinforcing Steel (Substructure)		LB	6,574	2,502
Non-Shrink Grout		C.F.	*	
Steel Piling (20" Dia. Pipe)		FT.	*	

* See CES (Summary Of Bridge Pay Items)

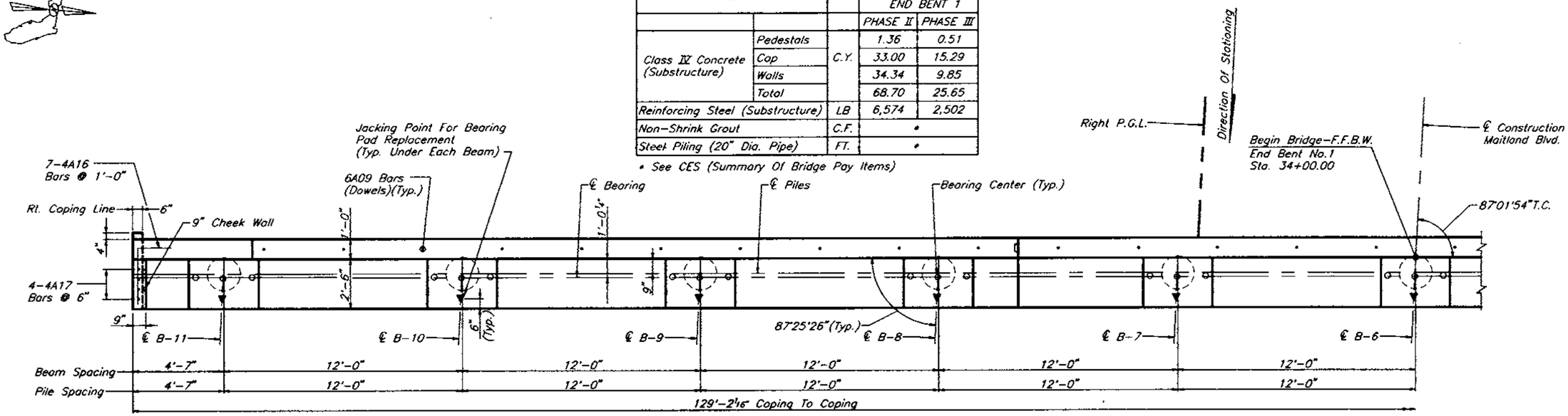

PLAN

NOTE:
Work This Sheet With End Bent No.1, Sheet 2 Of 2, And End Bent Detail Sheet.

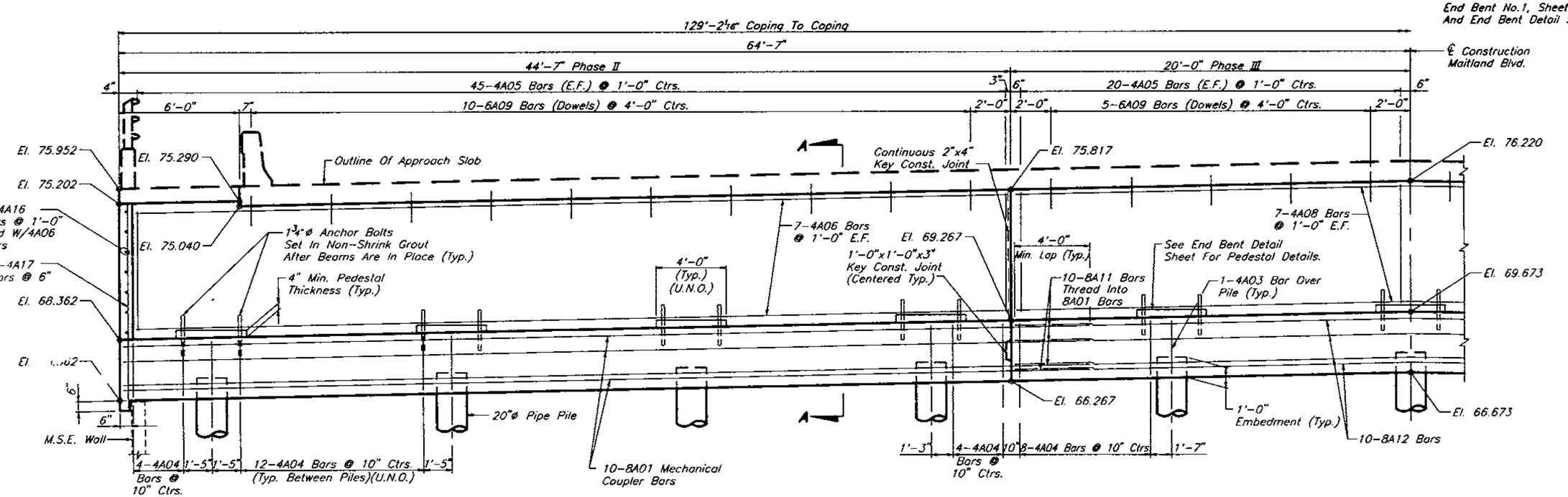

ELEVATION

REVISIONS					
Date	By	Description	Date	By	Description

	Names	Dates
Drawn by	JLA/JJS	3/96
Checked by	MKA	3/96
Designed by	MKA	3/96
Checked by	PM	3/96
Approved by	Peeter Monnik, P.E.	

ENGINEER OF RECORD:
DYER, RIDDLE, MILLS AND PRECOURT, INC.
1606 EAST COLONIAL DRIVE
ORLANDO, FLORIDA 32803

LOGO: DRMP DYER, RIDDLE, MILLS & PRECOURT, INC. ENGINEERS · SURVEYORS

SEAL: Peeter Monnik 3/4/98

FLORIDA DEPARTMENT OF TRANSPORTATION
STRUCTURES DESIGN OFFICE

ROAD NO.	COUNTY	PROJECT NO.
SR414	SEMINOLE	77002-3503

SHEET TITLE: END BENT NO. 1

PROJECT NAME: MAITLAND BOULEVARD OVER LAKE BOSSE

Drawing No. 1 Of 2

Index No.

JA/JS02/07/97 4:11P

000BRV\LKB\LKBEB-1.DWG

FED. ROAD DIV. NO.	STATE	PROJECT NO.	FISCAL YEAR	SHEET NO.
3	FLA.		98	B-17

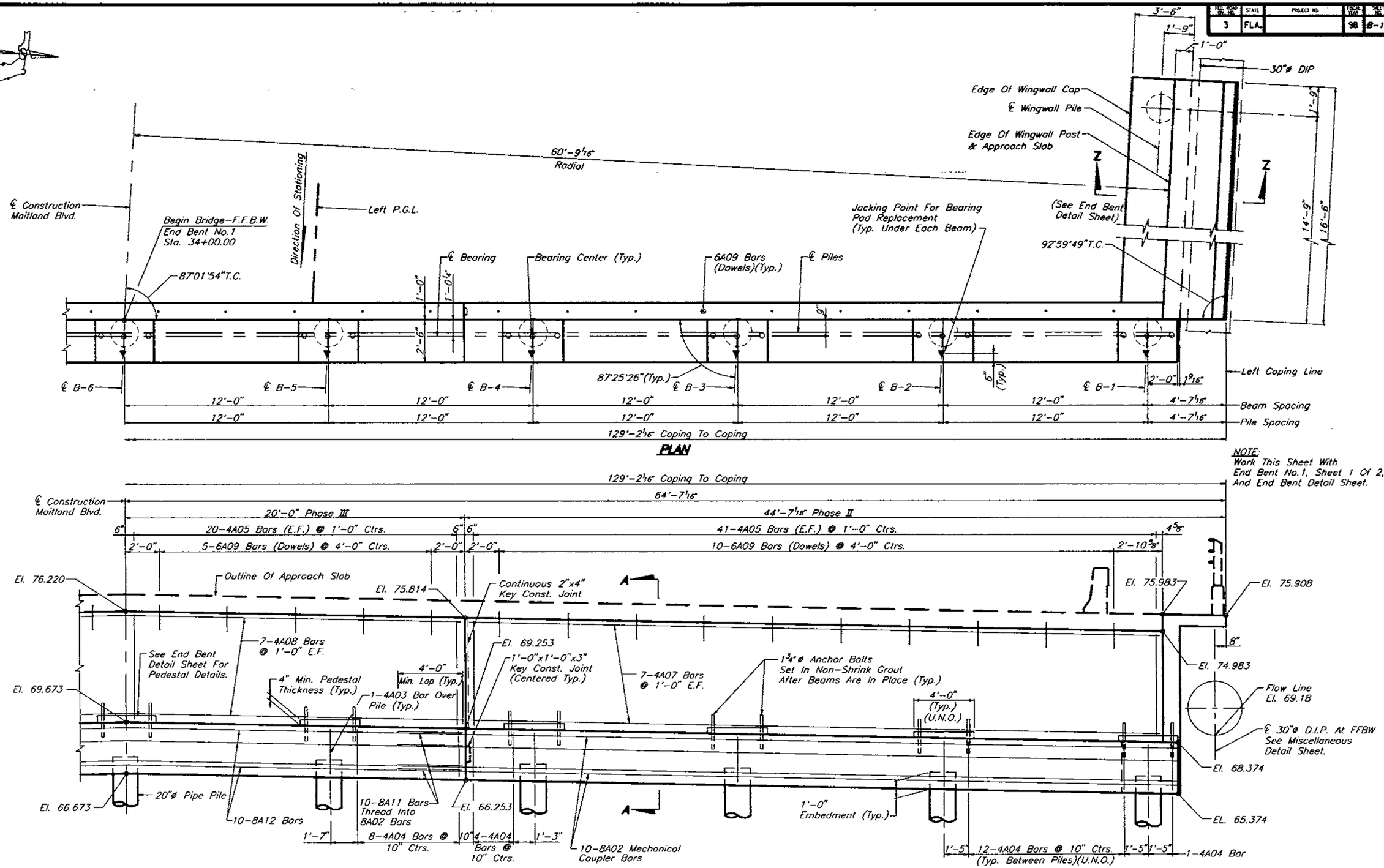

REVISIONS					
Date	By	Description	Date	By	Description

	Names	Dates
Drawn by	JLA/JJS	3/96
Checked by	MKA	3/96
Designed by	MKA	3/96
Checked by	PM	3/96
Approved by	Peeter Mannik, P.E.	

ENGINEER OF RECORD:
DYER, RIDDLE, MILLS AND PRECOURT, INC.
1608 EAST COLONIAL DRIVE
ORLANDO, FLORIDA 32803

LOGO:
DRMP
DYER, RIDDLE, MILLS & PRECOURT, INC.
ENGINEERS · SURVEYORS

SEAL:
Peeter Mannik
3/4/98

FLORIDA DEPARTMENT OF TRANSPORTATION
STRUCTURES DESIGN OFFICE

ROAD NO.	COUNTY	PROJECT NO.
SR414	SEMINOLE	77002–3503

SHEET TITLE: **END BENT NO. 1**

PROJECT NAME: **MAITLAND BOULEVARD OVER LAKE BOSSE**

Drawing No. **2 Of 2**

Index No.

JA/JS02/07/97 4:11PM M:\000BR\LKB\LKBEB-1.DWG

FED. ROAD DIV. NO.	STATE	PROJECT NO.	FISCAL YEAR	SHEET NO.
3	FLA.		98	B-18

ESTIMATED QUANTITIES

ITEM		UNIT	QUANTITY END BENT 7	
			PHASE II	PHASE III
Class IV Concrete (Substructure)	Pedestals	C.Y.	1.36	0.51
	Cap		33.00	15.29
	Walls		34.34	9.85
	Total		68.70	25.65
Reinforcing Steel (Substructure)		LB	6,574	2,502
Non-Shrink Grout		C.F.	*	
Steel Piling (20" Dia. Pipe)		FT.	*	

* See CES (Summary Of Bridge Pay Items)

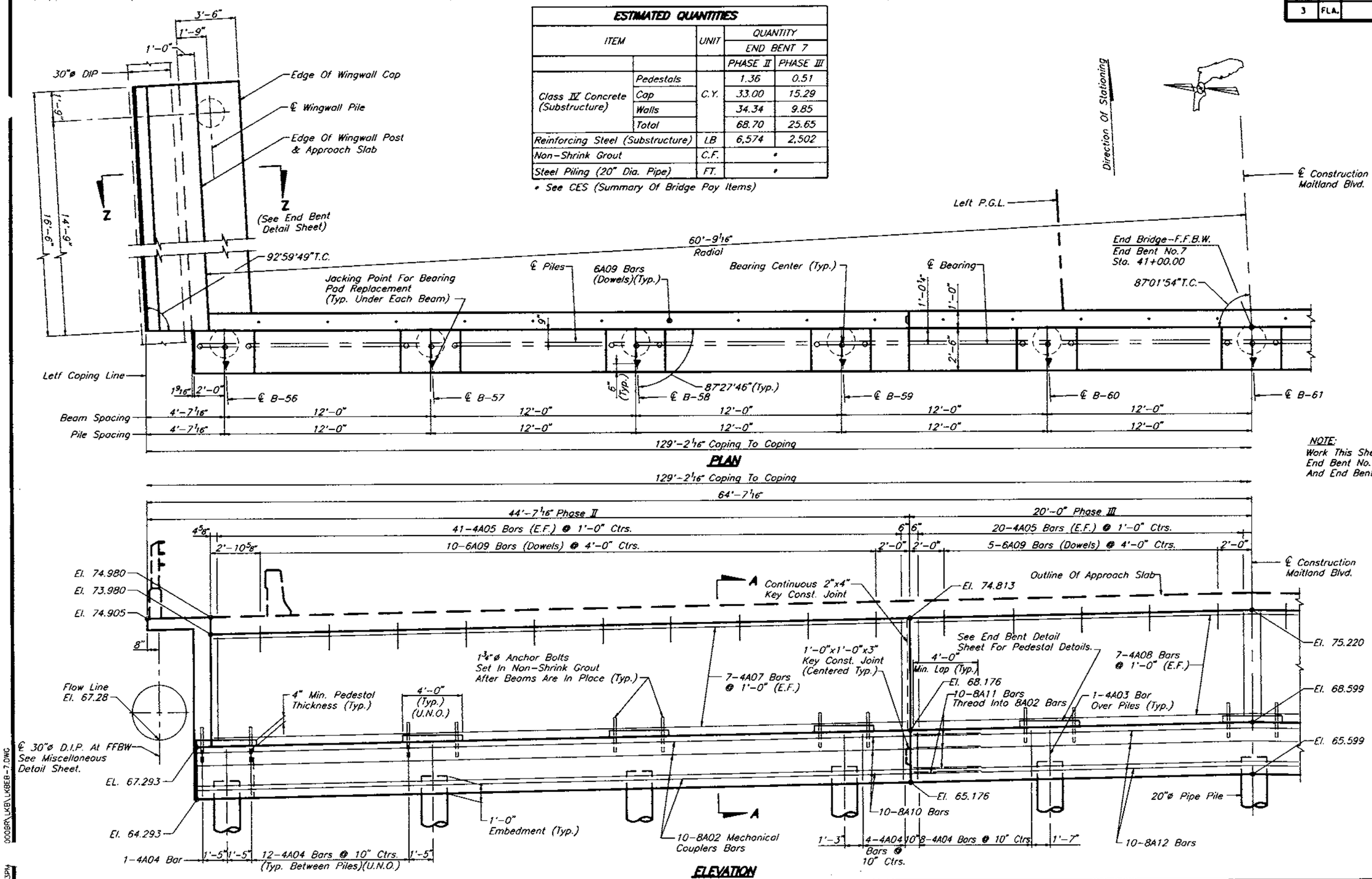

NOTE:
Work This Sheet With End Bent No.7, Sheet 2 Of 2, And End Bent Detail Sheet.

REVISIONS					
Date	By	Description	Date	By	Description

	Names	Dates
Drawn by	JLA/JJS	3/96
Checked by	MKA	3/96
Designed by	MKA	3/96
Checked by	PM	3/96
Approved by	Peeter Monnik, P.E.	

ENGINEER OF RECORD:
DYER, RIDDLE, MILLS AND PRECOURT, INC.
1505 EAST COLONIAL DRIVE
ORLANDO, FLORIDA 32803

LOGO: DRMP

SEAL: 3/6/98

FLORIDA DEPARTMENT OF TRANSPORTATION
STRUCTURES DESIGN OFFICE

ROAD NO.	COUNTY	PROJECT NO.
SR414	SEMINOLE	77002-3503

SHEET TITLE: END BENT NO. 7

PROJECT NAME: MAITLAND BOULEVARD OVER LAKE BOSSE

Drawing No. 1 Of 2

Index No.

JA/JS02/07/97 4:13PM

DOOBRY\LKBY\LKBE6-7.DWG

FED. ROAD DIV. NO.	STATE	PROJECT NO.	FISCAL YEAR	SHEET NO.
3	FLA.		98	B-19

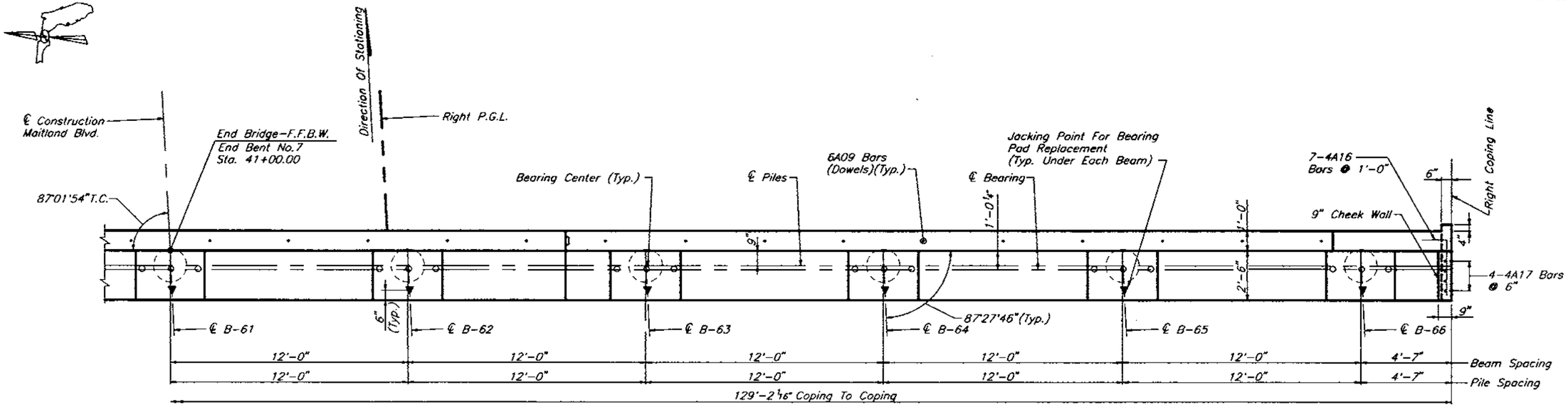

PLAN

NOTE:
Work This Sheet With
End Bent No.7, Sheet 1 Of 2,
And End Bent Detail Sheet.

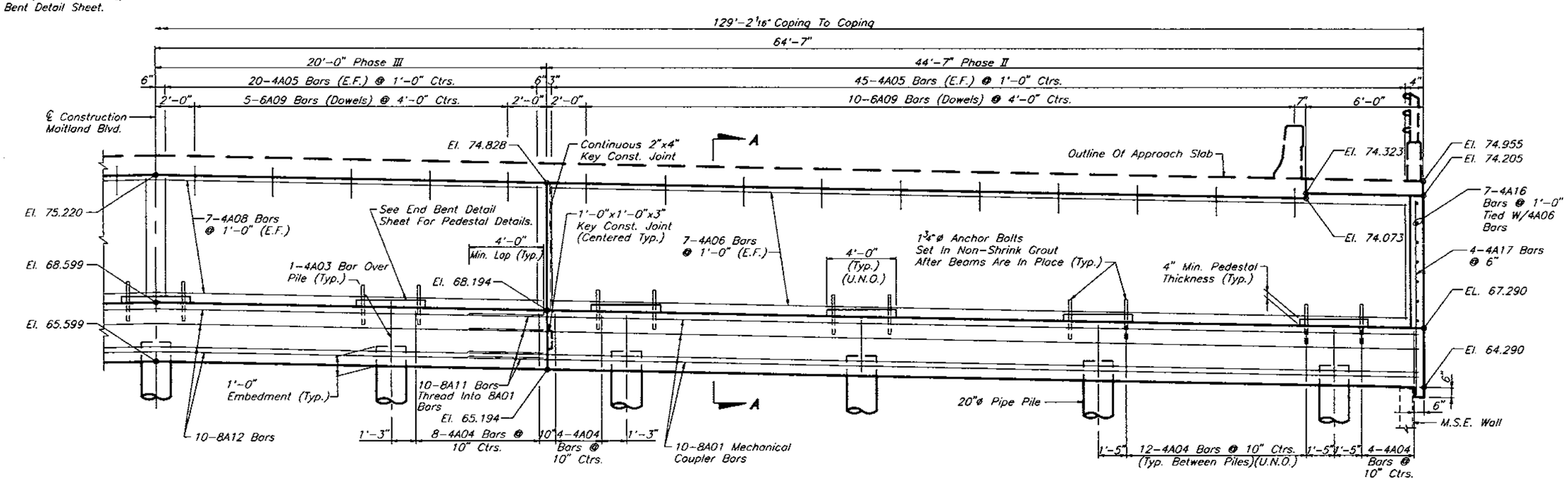

ELEVATION

REVISIONS					
Date	By	Description	Date	By	Description

	Names	Dates
Drawn by	JLA/JJS	3/96
Checked by	MKA	3/96
Designed by	MKA	3/96
Checked by	PM	3/96
Approved by	Peeter Mannik, P.E.	

ENGINEER OF RECORD:
DYER, RIDDLE, MILLS AND PRECOURT, INC.
1505 EAST COLONIAL DRIVE
ORLANDO, FLORIDA 32803

LOGO: DRMP DYER, RIDDLE, MILLS & PRECOURT, INC. ENGINEERS · SURVEYORS

SEAL: Peeter Mannik 3/4/98

FLORIDA DEPARTMENT OF TRANSPORTATION
STRUCTURES DESIGN OFFICE

ROAD NO.	COUNTY	PROJECT NO.
SR414	SEMINOLE	77002-3503

SHEET TITLE: END BENT NO. 7

PROJECT NAME: MAITLAND BOULEVARD OVER LAKE BOSSE

Drawing No. 2 Of 2

Index No.

JA/JSG2/07/97 4:13PM M:\0008R\LK8\LK8EB-7.DWG

FED. ROAD DIV. NO.	STATE	PROJECT NO.	FISCAL YEAR	SHEET NO.
3	FLA.		98	8-20

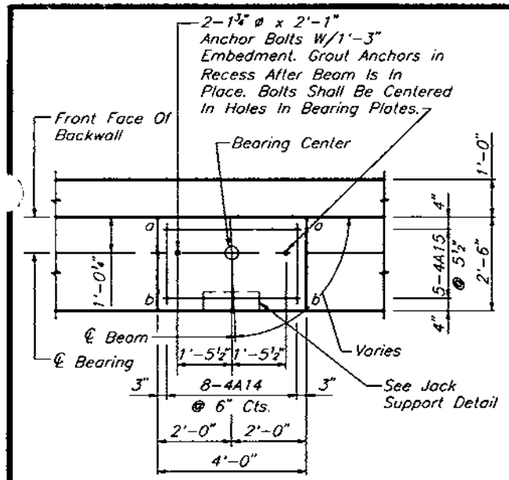

PEDESTAL DETAIL

NOTE:

Points a And b Refer To The Pedestal Corner Elevations.

PEDESTAL ELEVATIONS		
END BENT NO. 1		
BEAM MARK	Pt. a	Pt. b
B-1	68.870	68.906
B-2	69.114	69.150
B-3	69.358	69.394
B-4	69.602	69.637
B-5	69.846	69.881
B-6	70.090	70.125
B-7	69.854	69.890
B-8	69.619	69.654
B-9	69.383	69.418
B-10	69.148	69.183
B-11	68.912	68.947

PEDESTAL ELEVATIONS		
END BENT NO. 7		
BEAM MARK	Pt. a	Pt. b
B-56	67.794	67.837
B-57	68.038	68.081
B-58	68.282	68.326
B-59	68.527	68.570
B-60	68.771	68.814
B-61	69.016	68.059
B-62	68.781	68.824
B-63	68.546	68.589
B-64	68.310	68.353
B-65	68.075	68.118
B-66	67.840	67.883

UNFACTORED JACKING LOADS		
Dead Load (Tons)	Live Load & Impact (Tons)	Total (Tons)
75	24	99

Jacks Should Be Equipped To Lift Each End Of The Span Simultaneously. For Additional Jacking Notes See General Notes Sheet A-2. Loads Are Given Per Jack.

NOTES:

1. Work this sheet with end bent sheets & retaining wall sheets.
2. Soil reinforcing straps are to resist a lateral force of 3.0 kips per foot of backwall @ 4'-0" measured from the bottom of the end bent cap.
3. Non-shrink grout for anchor bolts shall be in accordance with specification section 934 and shall be listed in FDOT's qualified products list.
4. Payment for the jack support shall be included in the cost of Class IV substructure concrete.

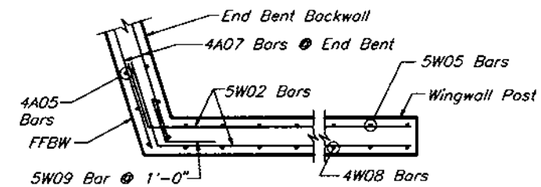

SECTION C-C

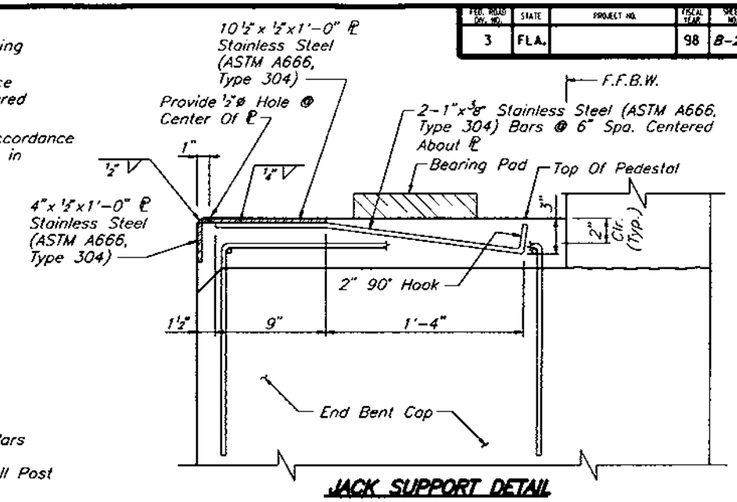

JACK SUPPORT DETAIL

TYPICAL @ EACH END BENT PEDESTAL

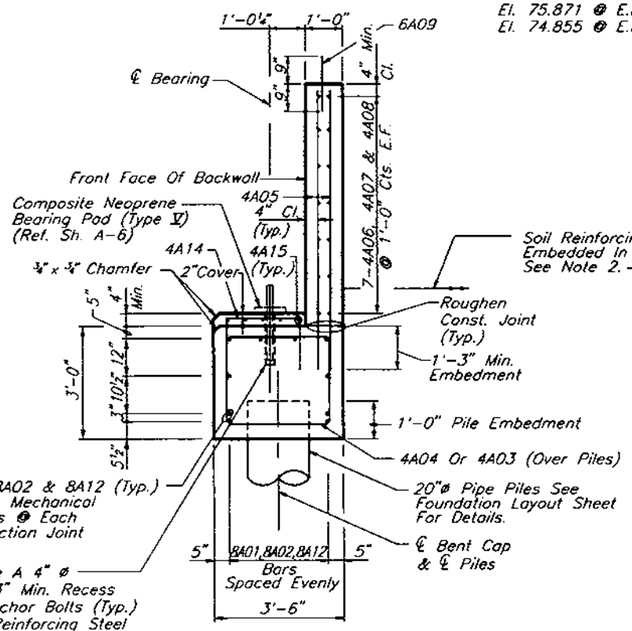

SECTION A-A

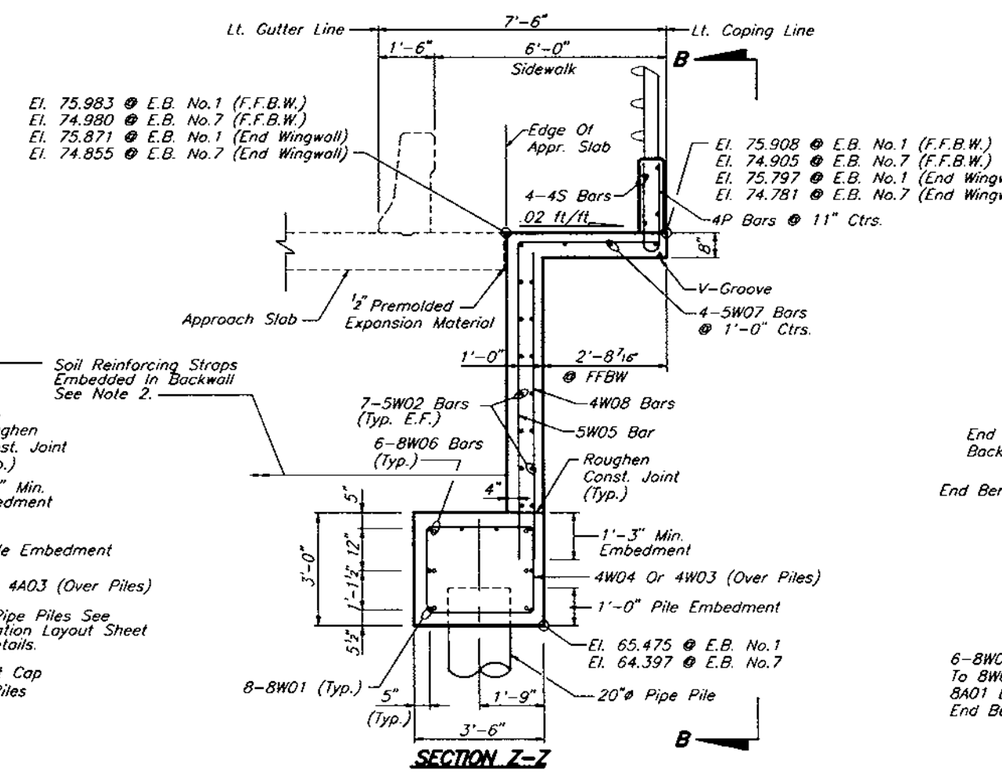

SECTION Z-Z

30" ø Utility Pipe Not Shown

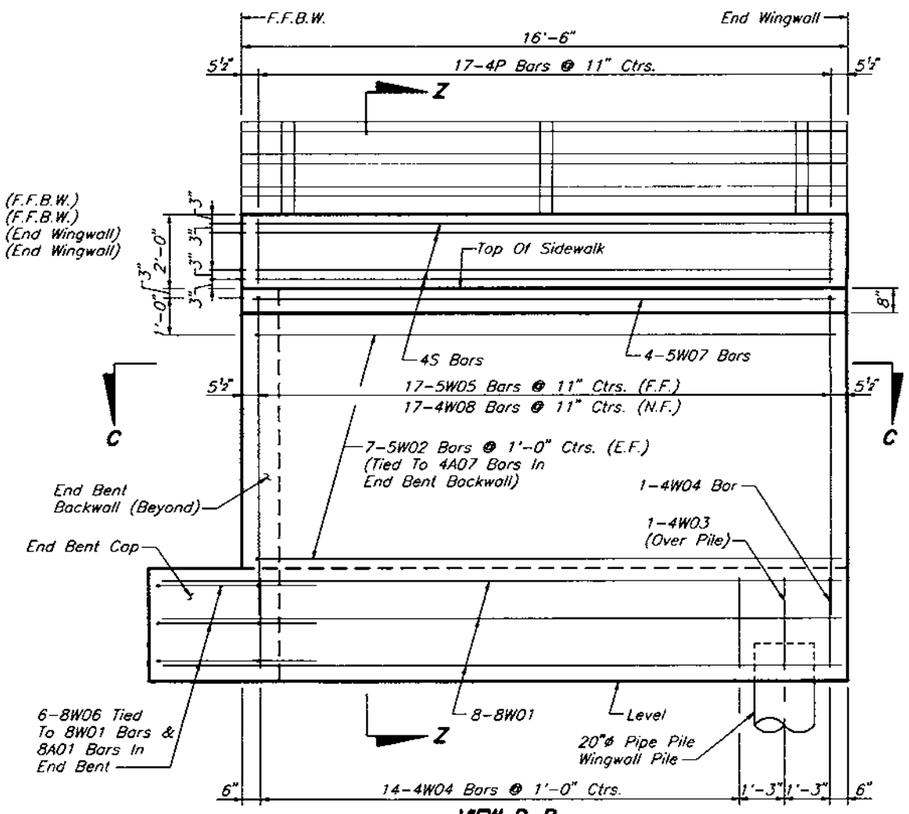

VIEW B-B

REVISIONS					
Date	By	Description	Date	By	Description

	Names	Dates
Drawn by	JLA/JJS	3/96
Checked by	MKA	3/96
Designed by	MKA	3/96
Checked by	PM	3/96
Approved by	Peeter Mannik, P.E.	

ENGINEER OF RECORD:
DYER, RIDDLE, MILLS AND PRECOURT, INC.
1605 EAST COLONIAL DRIVE
ORLANDO, FLORIDA 32803

LOGO: DRMP

SEAL: Peeter Mannik 3/4/98

FLORIDA DEPARTMENT OF TRANSPORTATION
STRUCTURES DESIGN OFFICE

ROAD NO.	COUNTY	PROJECT NO.
SR414	SEMINOLE	77002-3503

SHEET TITLE: END BENT DETAILS

PROJECT NAME: MAITLAND BOULEVARD OVER LAKE BOSSE

Drawing No.

Index No.

JA/JS02/07/97 4:14PM \\DOOBRA\LKB\LKBEBDT.DWG

FED. ROAD DIV. NO.	STATE	PROJECT NO.	FISCAL YEAR	SHEET NO.
3	FLA.		98	B-21

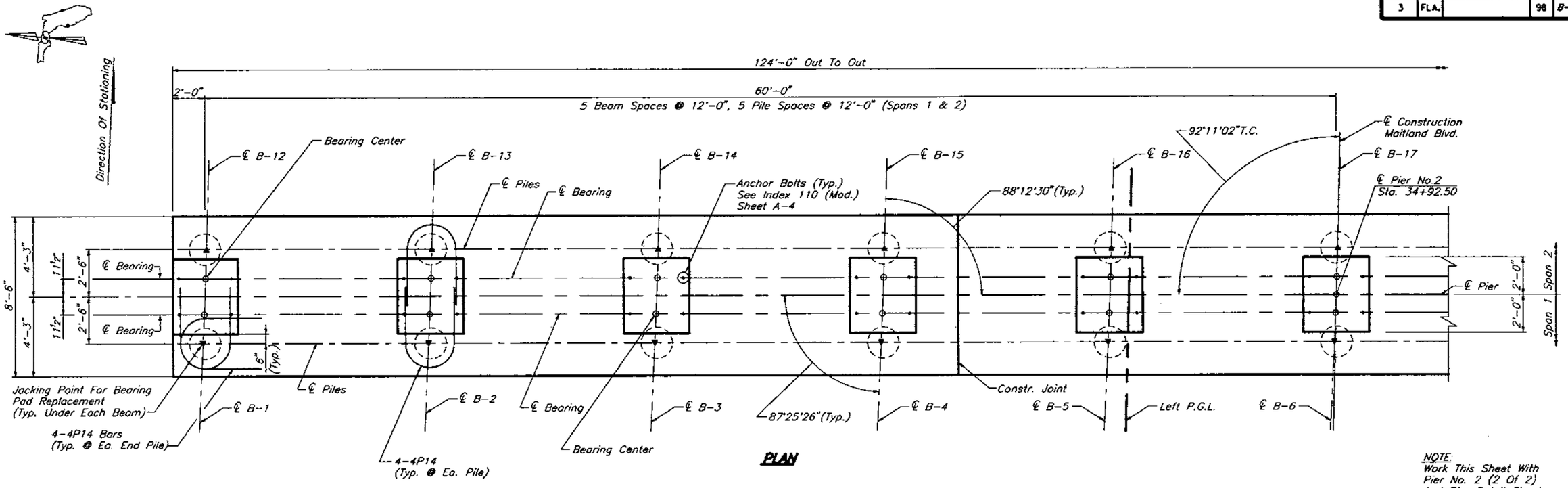

PLAN

NOTE:
Work This Sheet With
Pier No. 2 (2 Of 2)
And Pier Detail Sheet.

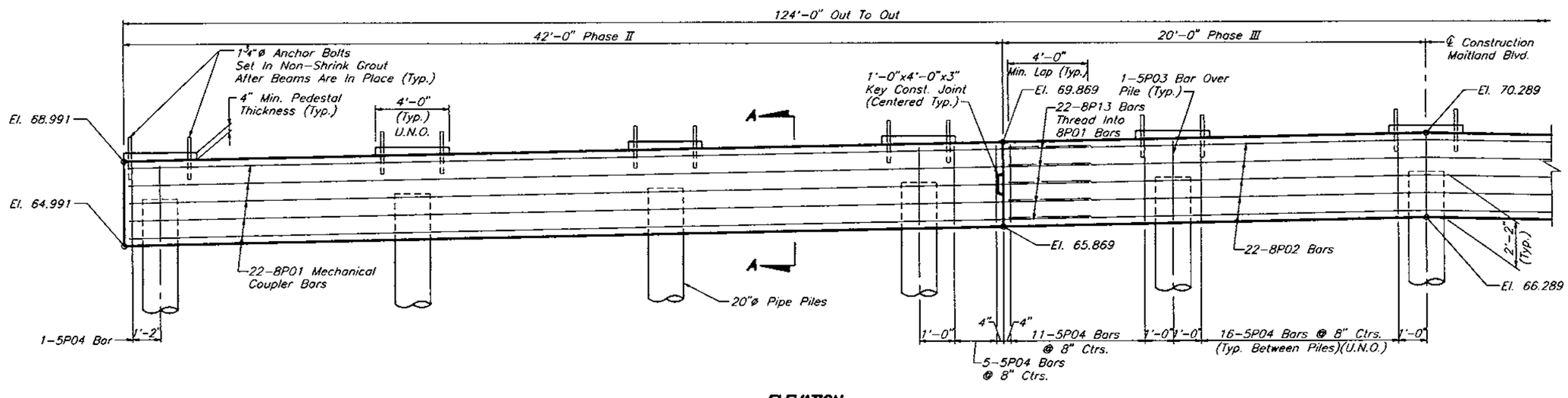

ELEVATION

REVISIONS					
Date	By	Description	Date	By	Description

	Names	Dates
Drawn by	JLA/JJS	3/96
Checked by	MKA	3/96
Designed by	MKA	3/96
Checked by	PM	3/96
Approved by	Peeter Monnik, P.E.	

ENGINEER OF RECORD:
DYER, RIDDLE, MILLS AND PRECOURT, INC.
1505 EAST COLONIAL DRIVE
ORLANDO, FLORIDA 32803

LOGO: DRMP

SEAL: Peeter Monnik 3/4/98

FLORIDA DEPARTMENT OF TRANSPORTATION
STRUCTURES DESIGN OFFICE

ROAD NO.	COUNTY	PROJECT NO.
SR414	SEMINOLE	77002-3503

SHEET TITLE: **PIER NO. 2**

PROJECT NAME: **MAITLAND BOULEVARD OVER LAKE BOSSE**

Drawing No. **1 Of 2**

Index No.

15/15:07/07/97 4:15PM M:\0008R\LKB\LKBPR-2.DWG

FED. ROAD DIV. NO.	STATE	PROJECT NO.	FISCAL YEAR	SHEET NO.
3	FLA.		98	B-22

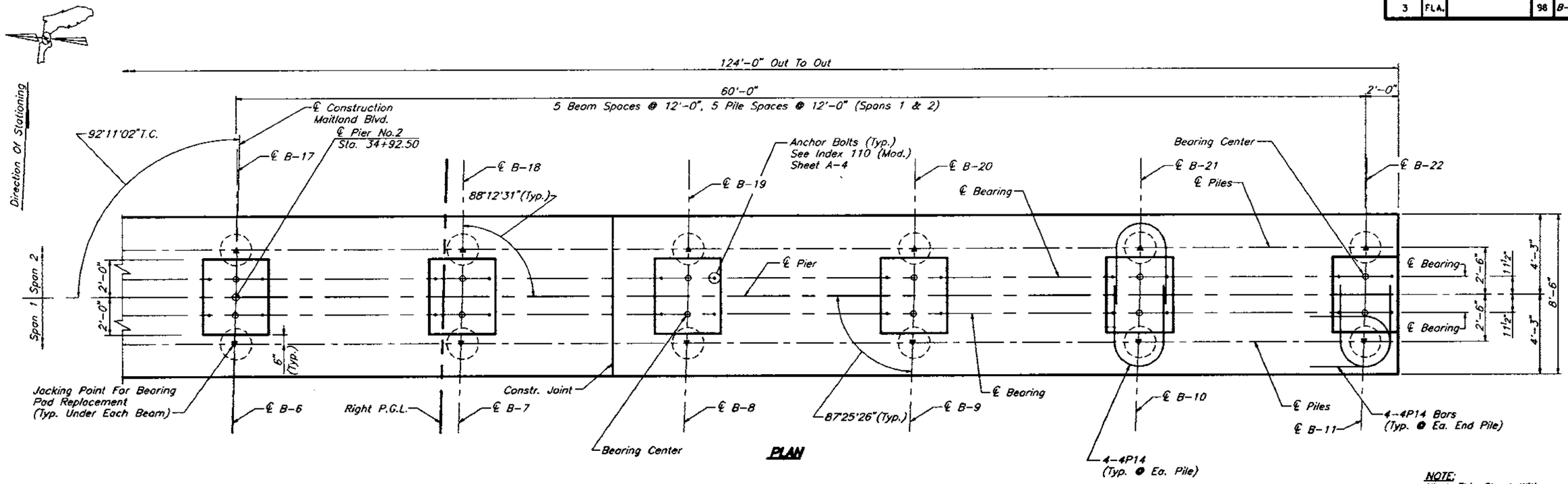

PLAN

NOTE:
Work This Sheet With Pier No. 2 (1 Of 2) And Pier Detail Sheet.

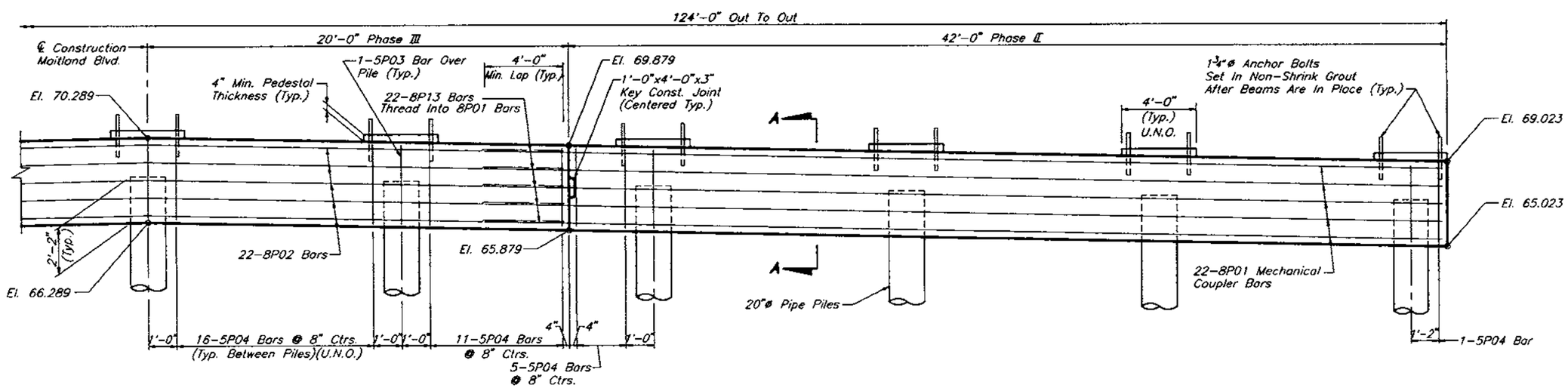

ELEVATION

REVISIONS					
Date	By	Description	Date	By	Description

	Names	Dates
Drawn by	JLA/JJS	3/96
Checked by	MKA	3/96
Designed by	MKA	3/96
Checked by	PM	3/96
Approved by	Peeter Mannik, P.E.	

ENGINEER OF RECORD:
DYER, RIDDLE, MILLS AND PRECOURT, INC.
1505 EAST COLONIAL DRIVE
ORLANDO, FLORIDA 32803

LOGO: DRMP

SEAL: Peeter Mannik 3/9/98

FLORIDA DEPARTMENT OF TRANSPORTATION
STRUCTURES DESIGN OFFICE

ROAD NO.	COUNTY	PROJECT NO.
SR414	SEMINOLE	77002-3503

SHEET TITLE: PIER NO. 2

PROJECT NAME: MAITLAND BOULEVARD OVER LAKE BOSSE

Drawing No. 2 Of 2

Index No.

\000BR\LKB\LKBPR-2.DWG

JA/JS02/07/97 4:15PM

FED. ROAD DIV. NO.	STATE	PROJECT NO.	FISCAL YEAR	SHEET NO.
3	FLA.		98	B-23

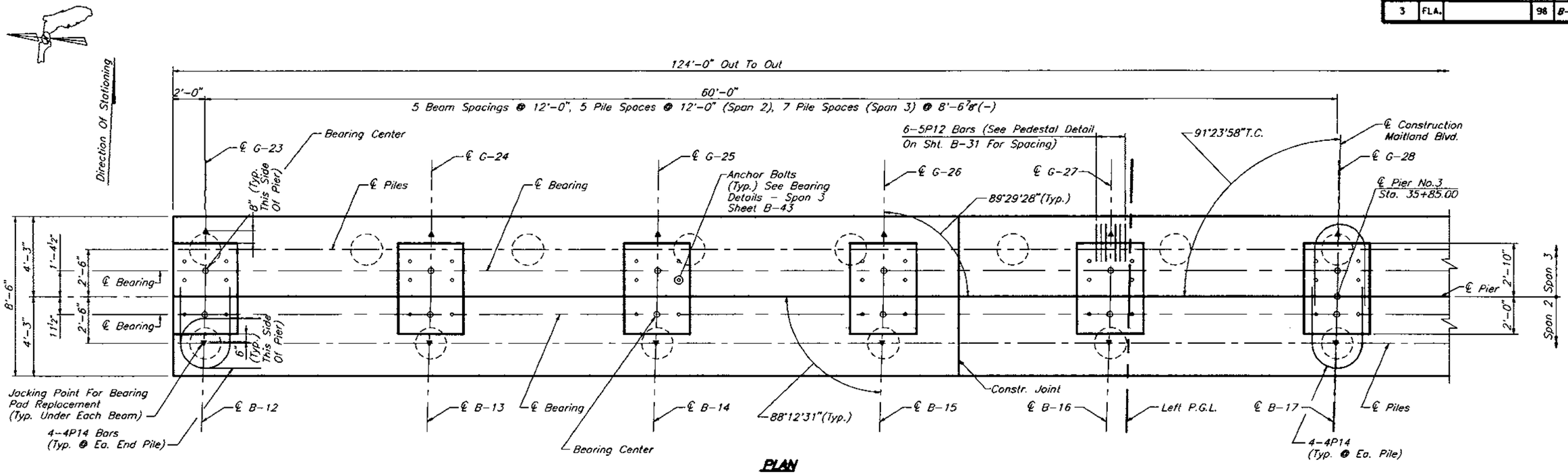

PLAN

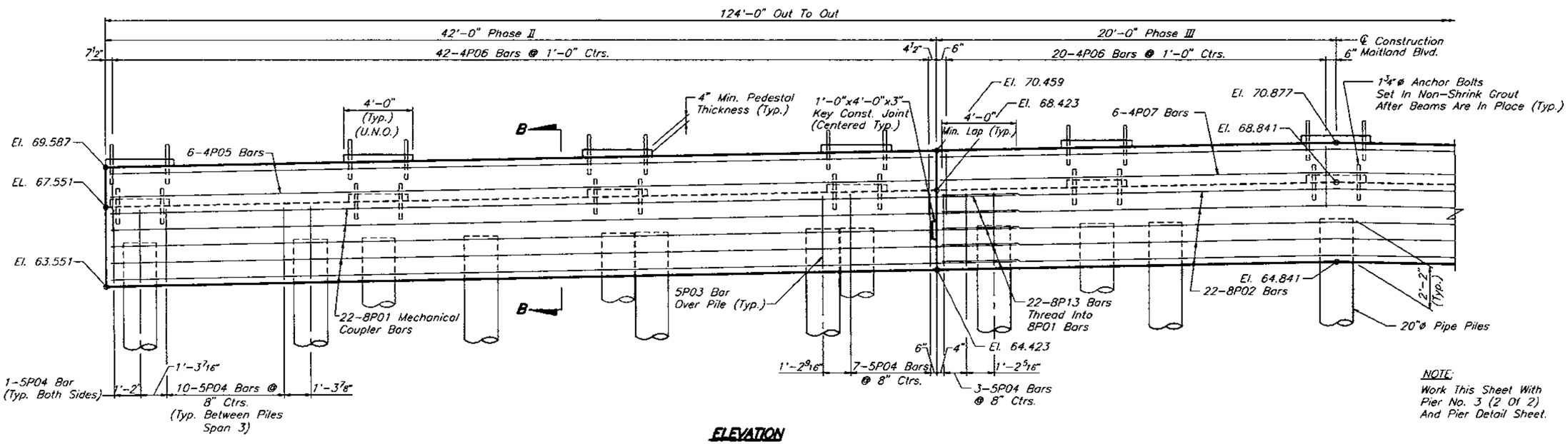

ELEVATION

NOTE:
Work This Sheet With Pier No. 3 (2 Of 2) And Pier Detail Sheet.

REVISIONS					
Date	By	Description	Date	By	Description

	Names	Dates
Drawn by	JLA/JJS	3/96
Checked by	MKA	3/96
Designed by	MKA	3/96
Checked by	PM	3/96
Approved by	Peeter Mannik, P.E.	

ENGINEER OF RECORD:
DYER, RIDDLE, MILLS AND PRECOURT, INC.
1505 EAST COLONIAL DRIVE
ORLANDO, FLORIDA 32803

LOGO: DRMP DYER, RIDDLE, MILLS & PRECOURT, INC. ENGINEERS · SURVEYORS

SEAL: Peeter Mannik 3/4/98

FLORIDA DEPARTMENT OF TRANSPORTATION
STRUCTURES DESIGN OFFICE

ROAD NO.	COUNTY	PROJECT NO.
SR414	SEMINOLE	77002-3503

SHEET TITLE: **PIER NO. 3**

PROJECT NAME: **MAITLAND BOULEVARD OVER LAKE BOSSE**

Drawing No. **1 Of 2**

Index No.

JA/JJS2/07/97 4:16PM M:\000BR\LK6\LK6PR-3.DWG

FED. ROAD DIV. NO.	STATE	PROJECT NO.	FISCAL YEAR	SHEET NO.
3	FLA.		98	B-24

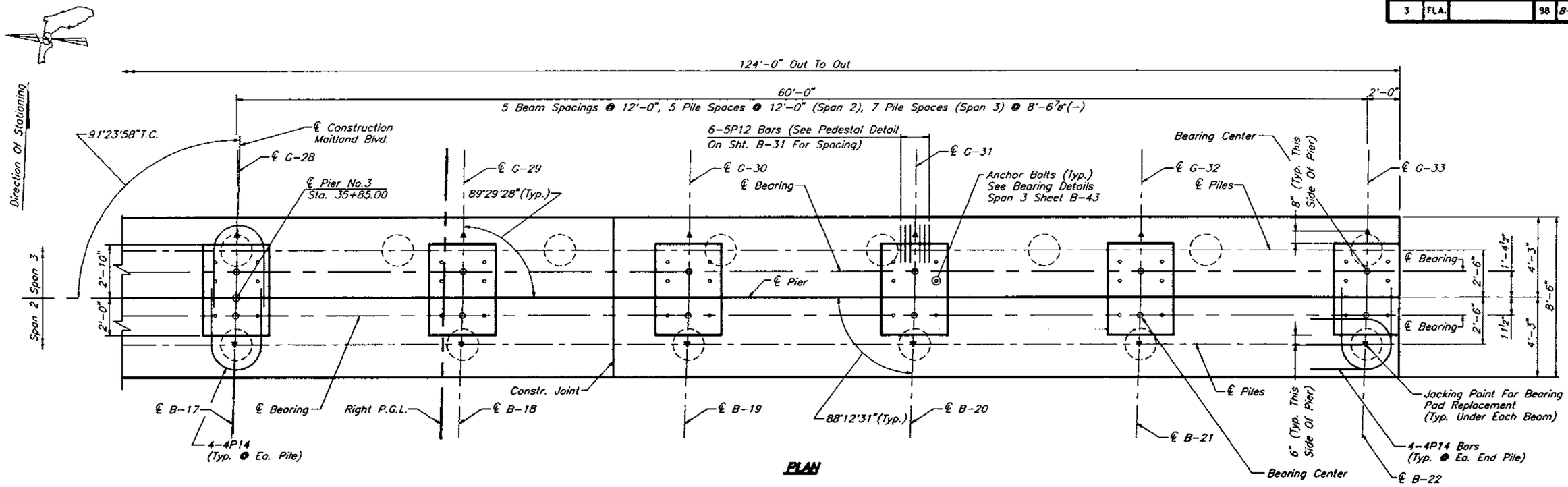

PLAN

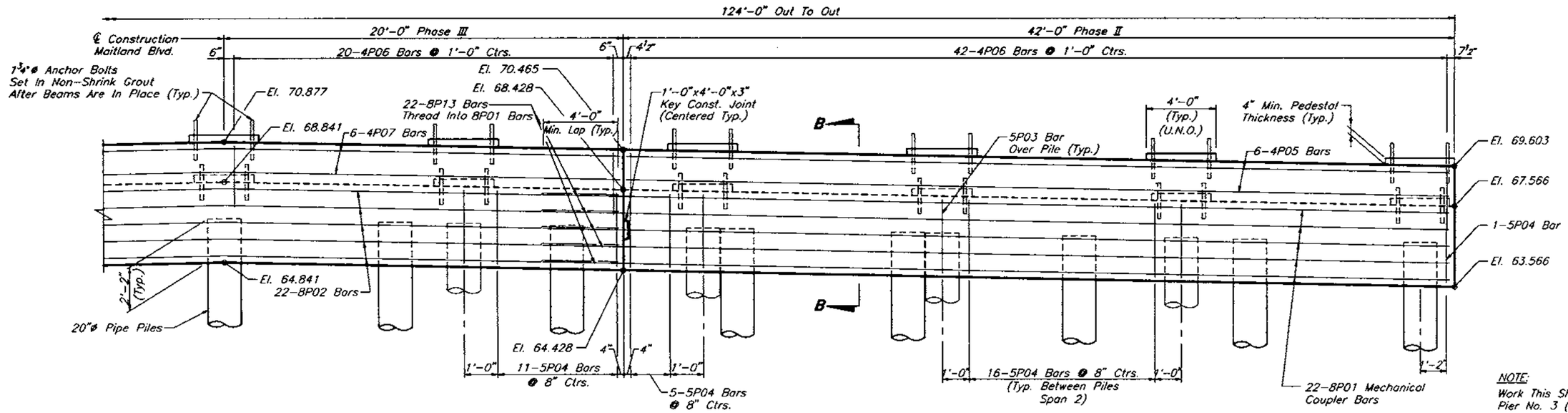

ELEVATION

NOTE:
Work This Sheet With Pier No. 3 (1 Of 2) And Pier Detail Sheet.

REVISIONS					
Date	By	Description	Date	By	Description

	Names	Dates
Drawn by	JLA/JJS	3/96
Checked by	MKA	3/96
Designed by	MKA	3/96
Checked by	PM	3/96
Approved by	Peeter Mannik, P.E.	

ENGINEER OF RECORD:
DYER, RIDDLE, MILLS AND PRECOURT, INC.
1506 EAST COLONIAL DRIVE
ORLANDO, FLORIDA 32803

LOGO: DRMP DYER, RIDDLE, MILLS & PRECOURT, INC. ENGINEERS · SURVEYORS

SEAL: Peeter Mannik 3/4/98

FLORIDA DEPARTMENT OF TRANSPORTATION
STRUCTURES DESIGN OFFICE

ROAD NO.	COUNTY	PROJECT NO.
SR414	SEMINOLE	77002-3503

SHEET TITLE: PIER NO. 3

PROJECT NAME: MAITLAND BOULEVARD OVER LAKE BOSSE

Drawing No. 2 Of 2

Index No.

JA/JS02/07/97 4:16PM \000BR\LKB\LKBPR-3.DWG

FED. ROAD DIV. NO.	STATE	PROJECT NO.	FISCAL YEAR	SHEET NO.
3	FLA.		98	B-25

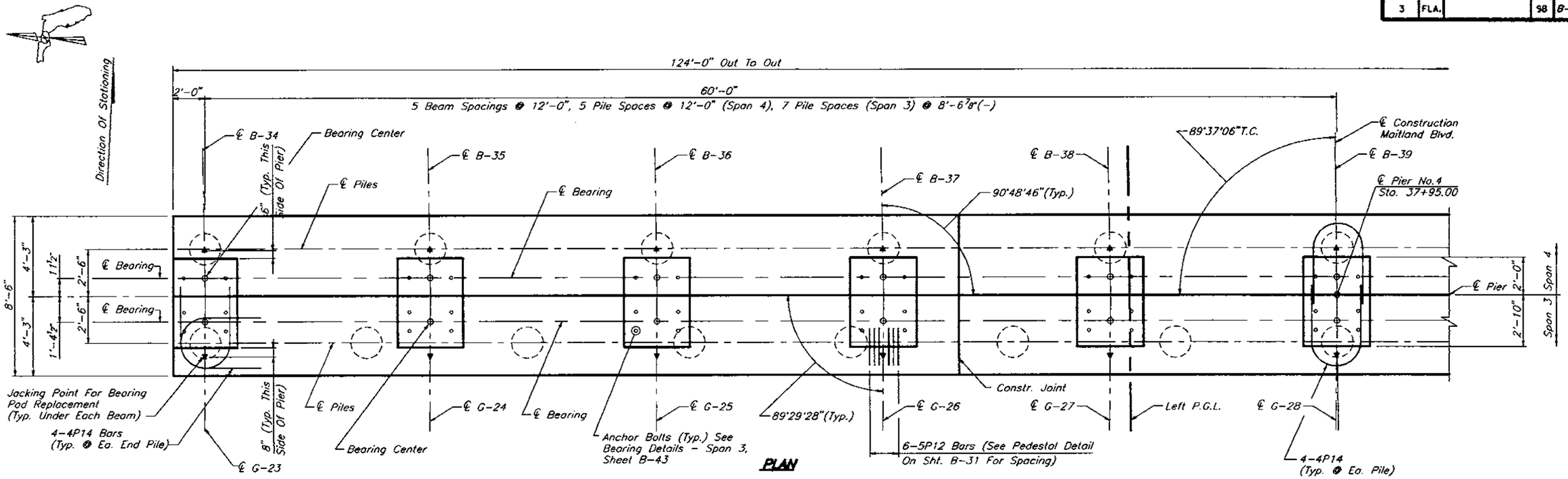

PLAN

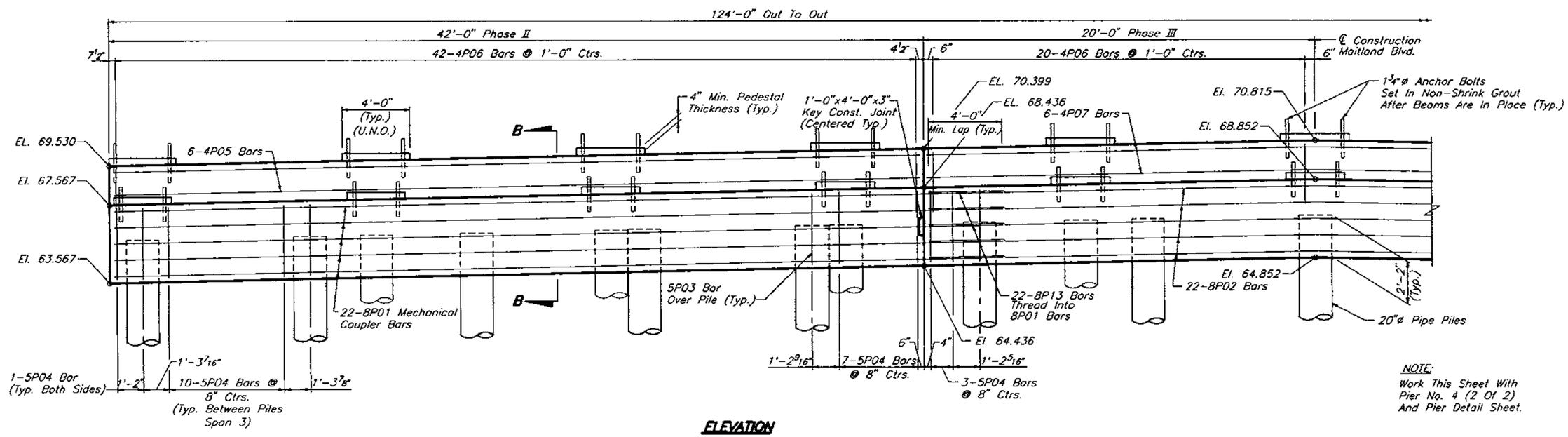

ELEVATION

NOTE:
Work This Sheet With Pier No. 4 (2 Of 2) And Pier Detail Sheet.

REVISIONS					
Date	By	Description	Date	By	Description

	Names	Dates
Drawn by	JLA/JJS	3/96
Checked by	MKA	3/96
Designed by	MKA	3/96
Checked by	PM	3/96
Approved by	Peeter Mannik, P.E.	

ENGINEER OF RECORD:
DYER, RIDDLE, MILLS AND PRECOURT, INC.
1606 EAST COLONIAL DRIVE
ORLANDO, FLORIDA 32803

LOGO: DRMP DYER, RIDDLE, MILLS & PRECOURT, INC. ENGINEERS · SURVEYORS

SEAL: Peeter Mannik 3/4/98

FLORIDA DEPARTMENT OF TRANSPORTATION
STRUCTURES DESIGN OFFICE

ROAD NO.	COUNTY	PROJECT NO.
SR414	SEMINOLE	77002-3503

SHEET TITLE: PIER NO. 4

PROJECT NAME: MAITLAND BOULEVARD OVER LAKE BOSSE

Drawing No. 1 Of 2

Index No.

JA/JSO2/07/97 4:17PM M:\DOOBR\LKB\LKBPR-4.DWG

FED. ROAD DIV. NO.	STATE	PROJECT NO.	FISCAL YEAR	SHEET NO.
3	FLA.		98	B-26

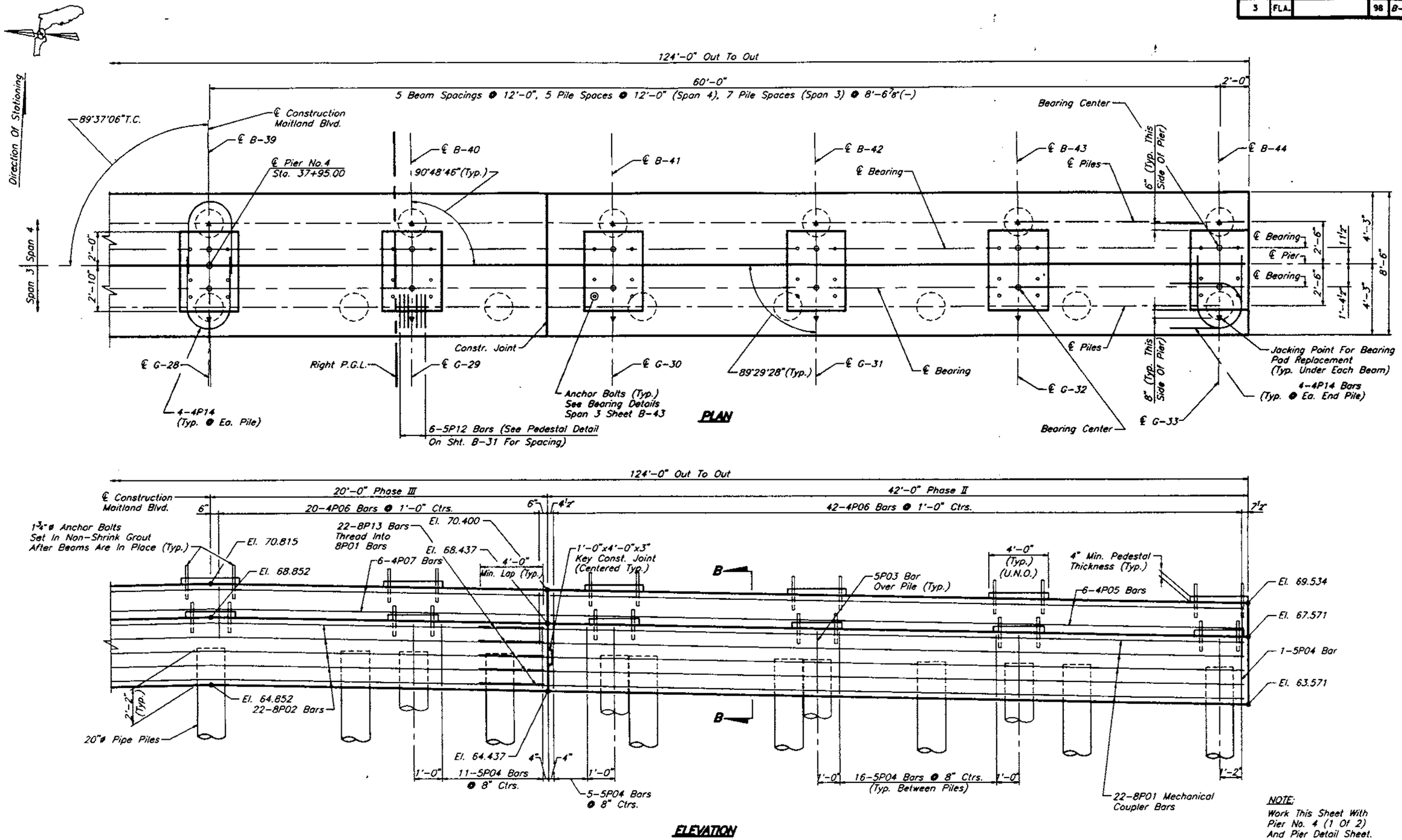

NOTE:
Work This Sheet With Pier No. 4 (1 Of 2) And Pier Detail Sheet.

REVISIONS					
Date	By	Description	Date	By	Description

	Names	Dates
Drawn by	JLA/JJS	3/96
Checked by	MKA	3/96
Designed by	MKA	3/96
Checked by	PM	3/96
Approved by	Peeter Mannik, P.E.	

ENGINEER OF RECORD: DYER, RIDDLE, MILLS AND PRECOURT, INC. 1605 EAST COLONIAL DRIVE ORLANDO, FLORIDA 32803

LOGO: DRMP

SEAL: 3/4/98

FLORIDA DEPARTMENT OF TRANSPORTATION
STRUCTURES DESIGN OFFICE

ROAD NO.	COUNTY	PROJECT NO.
SR414	SEMINOLE	77002-3503

SHEET TITLE: PIER NO. 4

PROJECT NAME: MAITLAND BOULEVARD OVER LAKE BOSSE

Drawing No. 2 Of 2

Index No.

JA/JS02/10/97 08:26

\000BR\LKG\LKBPR-4.DWG

FED. ROAD DIV. NO.	STATE	PROJECT NO.	FISCAL YEAR	SHEET NO.
3	FLA.		98	B-27

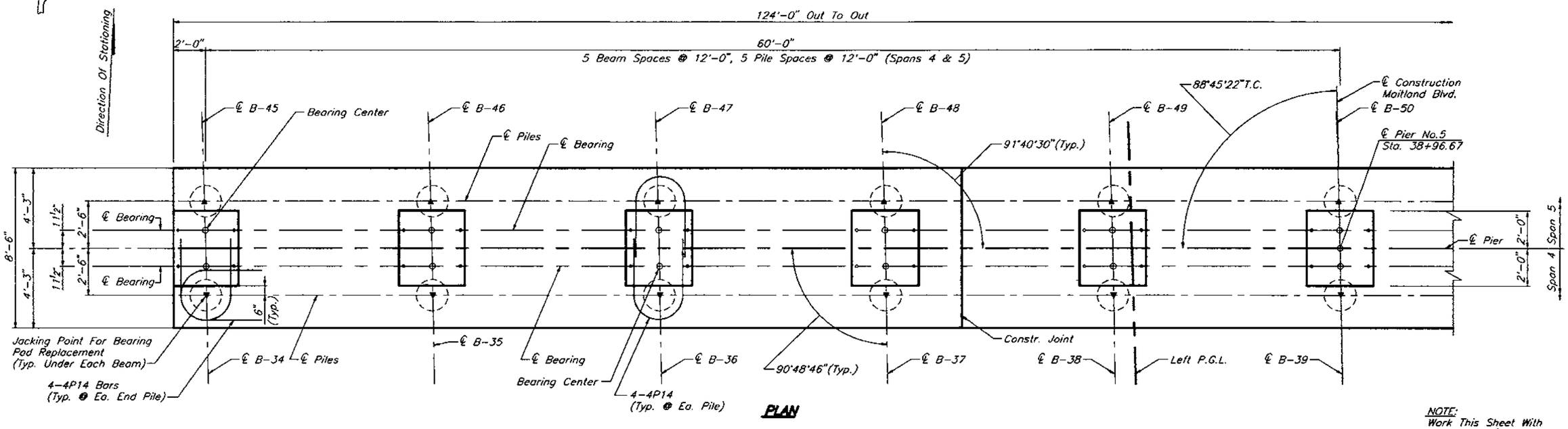

PLAN

NOTE:
Work This Sheet With Pier No. 5 (2 Of 2) And Pier Detail Sheet.

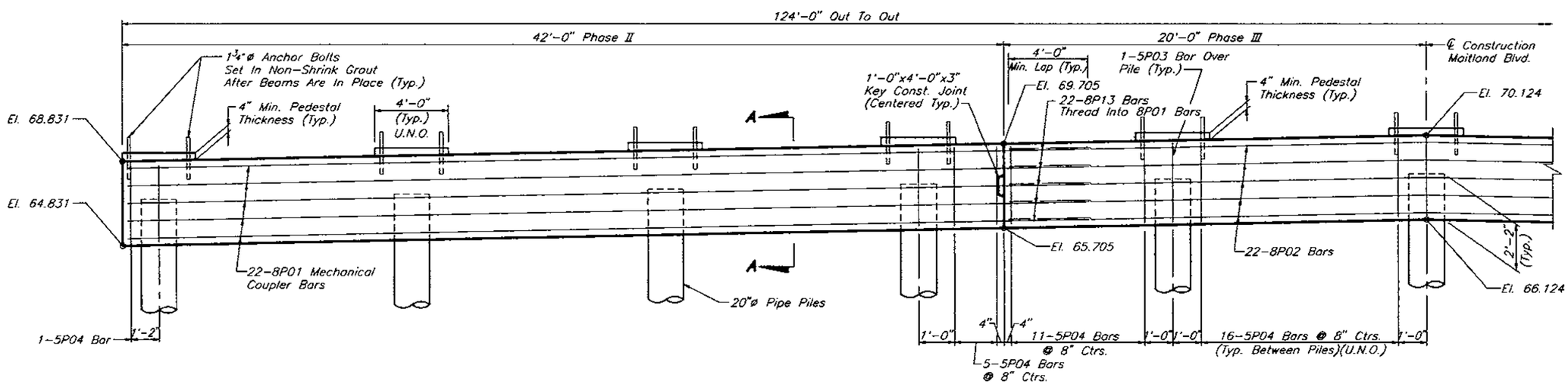

ELEVATION

REVISIONS					
Date	By	Description	Date	By	Description

	Names	Dates
Drawn by	JLA/JJS	3/96
Checked by	MKA	3/96
Designed by	MKA	3/96
Checked by	PM	3/96
Approved by	Peeter Monnik, P.E.	

ENGINEER OF RECORD:
DYER, RIDDLE, MILLS AND PRECOURT, INC.
1905 EAST COLONIAL DRIVE
ORLANDO, FLORIDA 32803

LOGO: DRMP DYER, RIDDLE, MILLS & PRECOURT, INC. ENGINEERS · SURVEYORS

SEAL: Peter Monnik 3/4/98

FLORIDA DEPARTMENT OF TRANSPORTATION
STRUCTURES DESIGN OFFICE

ROAD NO.	COUNTY	PROJECT NO.
SR414	SEMINOLE	77002-3503

SHEET TITLE: **PIER NO. 5**

PROJECT NAME: **MAITLAND BOULEVARD OVER LAKE BOSSE**

Drawing No. **1 Of 2**

Index No.

JA/JSD7/07/97 4:18PM M:\000BR\LKB\LKBPR-5.DWG

FED. ROAD DIV. NO.	STATE	PROJECT NO.	FISCAL YEAR	SHEET NO.
3	FLA.		98	B-28

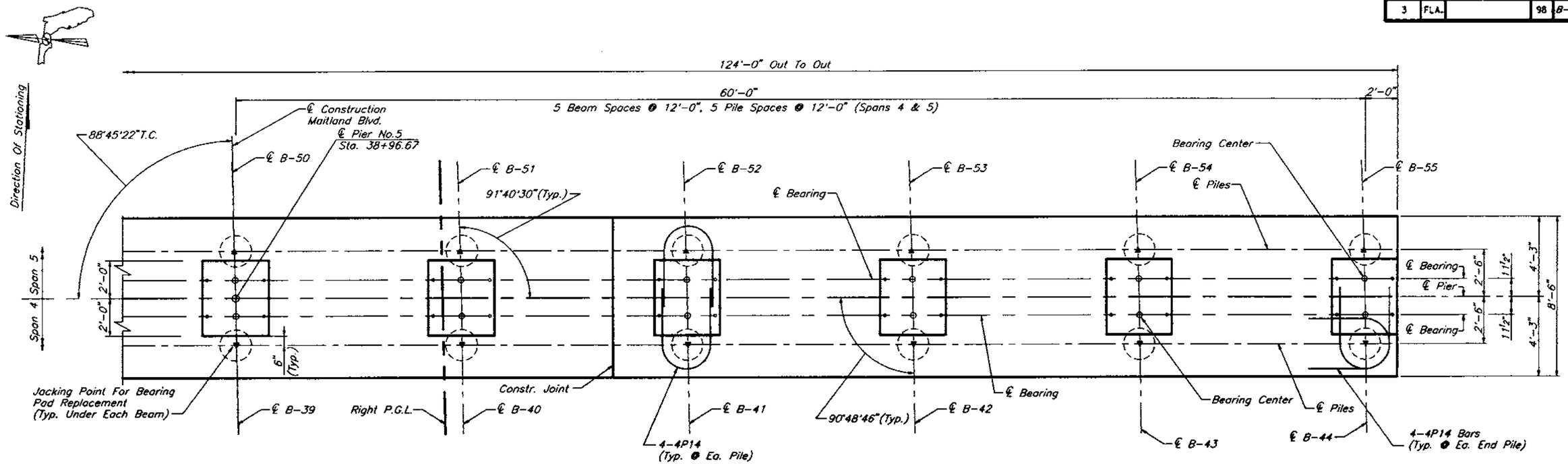

PLAN

NOTE:
Work This Sheet With Pier No. 5 (1 Of 2) And Pier Detail Sheet.

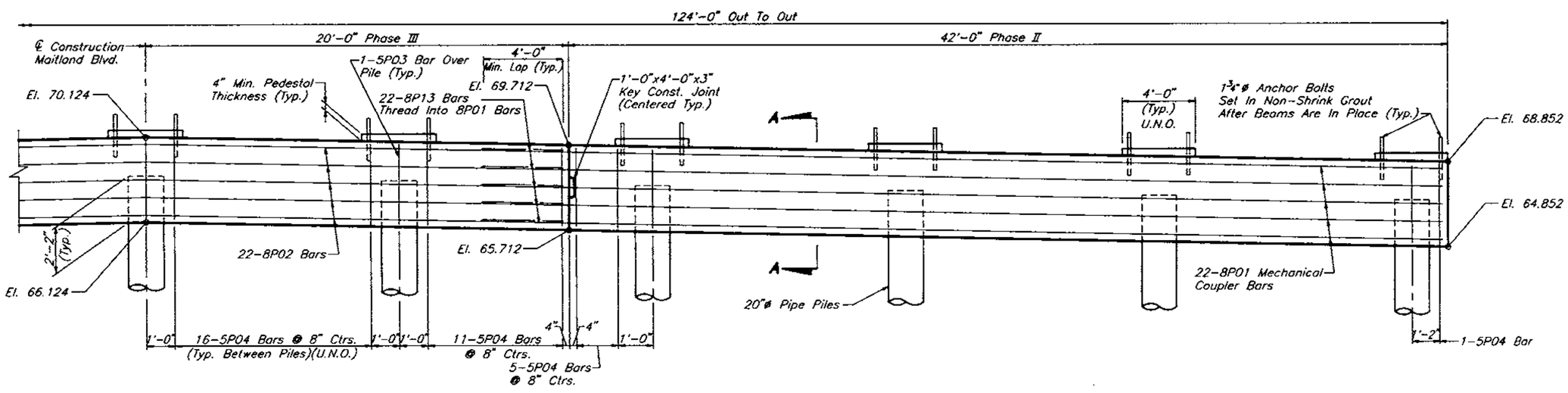

ELEVATION

REVISIONS					
Date	By	Description	Date	By	Description

	Names	Dates
Drawn by	JLA/JJS	3/96
Checked by	MKA	3/96
Designed by	MKA	3/96
Checked by	PM	3/96
Approved by	Peeter Mannik, P.E.	

ENGINEER OF RECORD:
DYER, RIDDLE, MILLS AND PRECOURT, INC.
1608 EAST COLONIAL DRIVE
ORLANDO, FLORIDA 32803

LOGO: DRMP

SEAL: Peeter Mannik 3/4/98

FLORIDA DEPARTMENT OF TRANSPORTATION
STRUCTURES DESIGN OFFICE

ROAD NO.	COUNTY	PROJECT NO.
SR414	SEMINOLE	77002-3503

SHEET TITLE: **PIER NO. 5**

PROJECT NAME: **MAITLAND BOULEVARD OVER LAKE BOSSE**

Drawing No. **2 Of 2**

Index No.

000BR\LKB\LKBPR-5.DWG

JA/JS02/07/97 4:18PM

FED. ROAD DIV. NO.	STATE	PROJECT NO.	FISCAL YEAR	SHEET NO.
3	FLA.		98	8-29

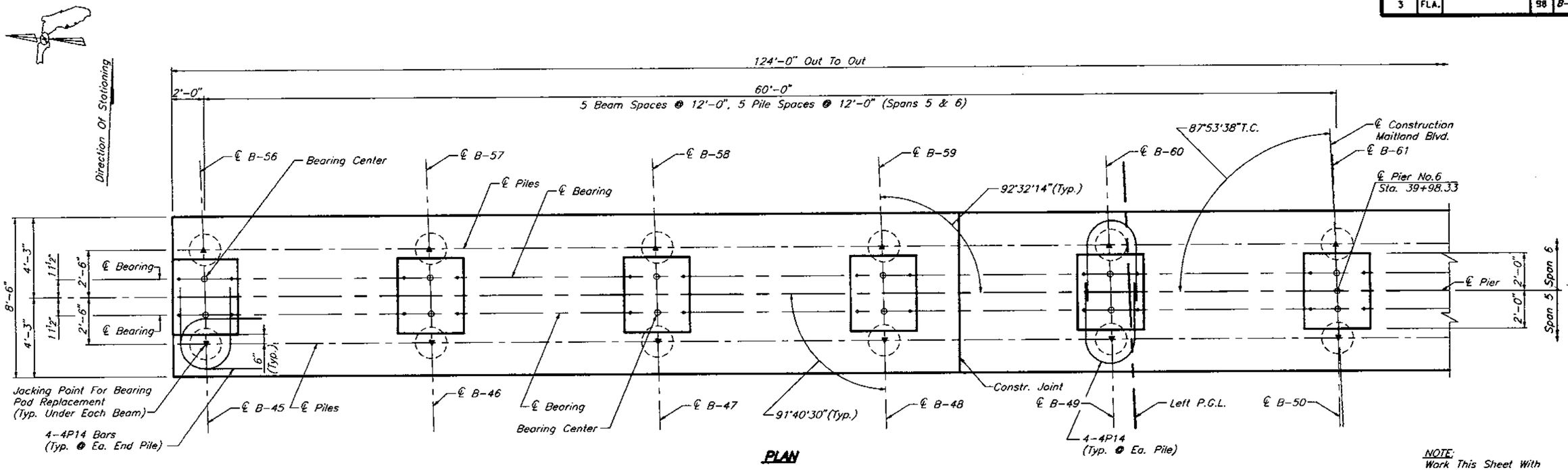

PLAN

NOTE:
Work This Sheet With Pier No. 6 (2 Of 2) And Pier Detail Sheet.

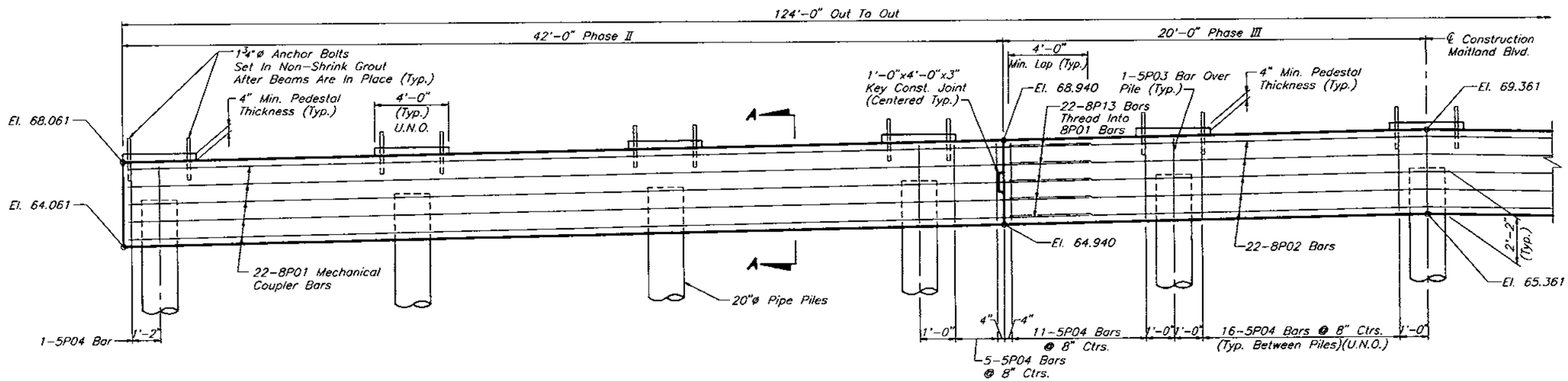

ELEVATION

REVISIONS					
Date	By	Description	Date	By	Description

	Names	Dates
Drawn by	JLA/JJS	3/96
Checked by	MKA	3/96
Designed by	MKA	3/96
Checked by	PM	3/96
Approved by	Peeter Mannik, P.E.	

ENGINEER OF RECORD:
DYER, RIDDLE, MILLS AND PRECOURT, INC.
1505 EAST COLONIAL DRIVE
ORLANDO, FLORIDA 32803

LOGO: DRMP DYER, RIDDLE, MILLS & PRECOURT, INC. ENGINEERS · SURVEYORS

SEAL: Peeter Mannik 3/4/98

FLORIDA DEPARTMENT OF TRANSPORTATION
STRUCTURES DESIGN OFFICE

ROAD NO.	COUNTY	PROJECT NO.
SR414	SEMINOLE	77002-3503

SHEET TITLE: **PIER NO. 6**

PROJECT NAME: **MAITLAND BOULEVARD OVER LAKE BOSSE**

Drawing No. 1 Of 2

Index No.

A/-SD2/10/97 11:49AM M:\000BR\LKB\LKBPR-6.DWG

FED. ROAD DIV. NO.	STATE	PROJECT NO.	FISCAL YEAR	SHEET NO.
3	FLA.		98	B-30

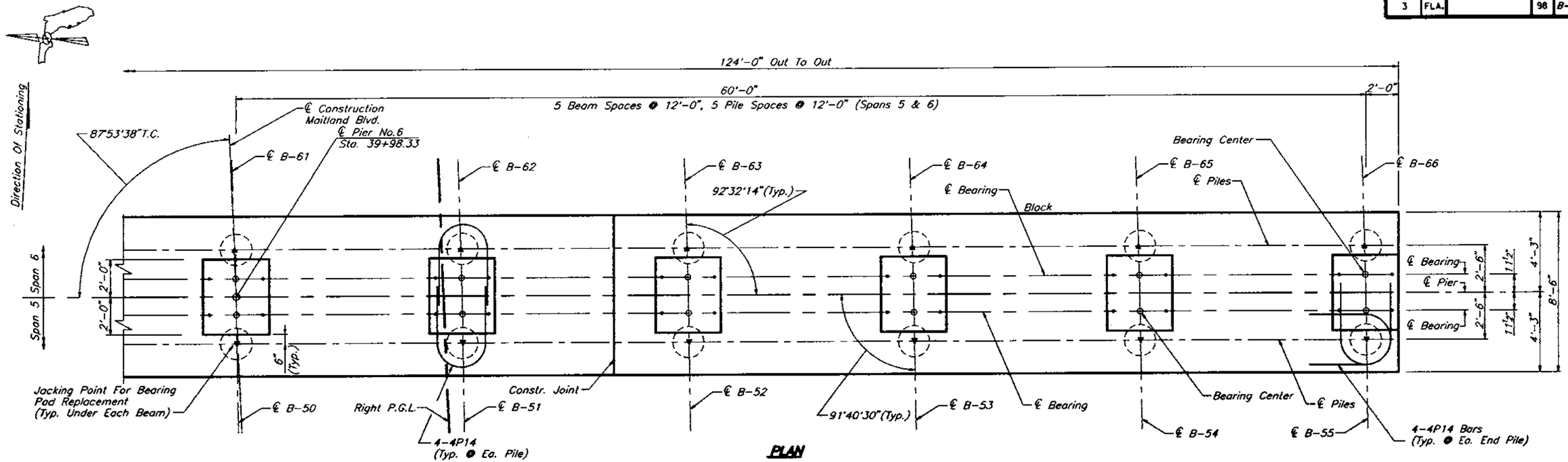

PLAN

NOTE:
Work This Sheet With Pier No. 6 (1 Of 2) And Pier Detail Sheet.

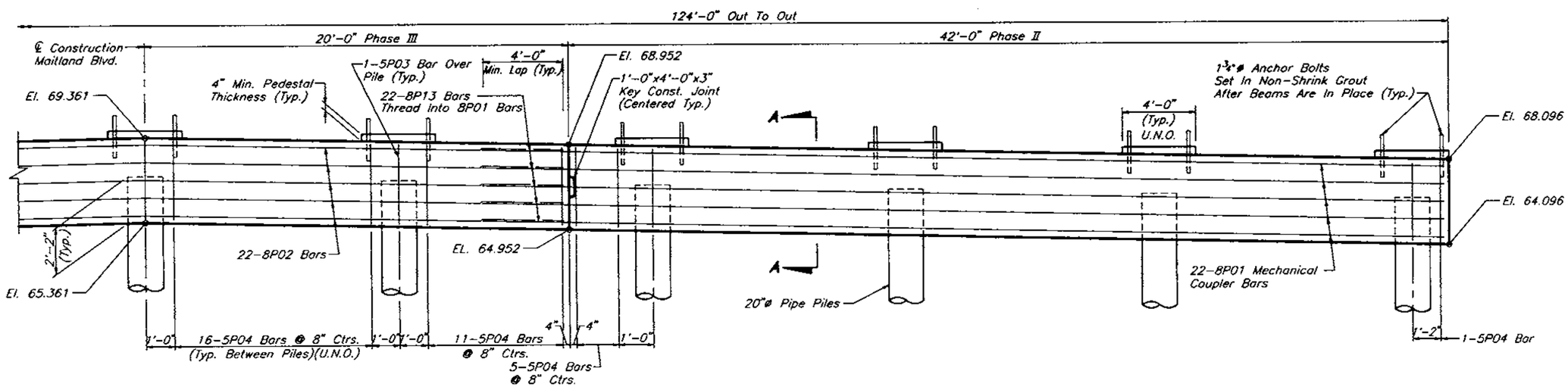

ELEVATION

REVISIONS					
Date	By	Description	Date	By	Description

	Names	Dates
Drawn by	JLA/JJS	3/96
Checked by	MKA	3/96
Designed by	MKA	3/96
Checked by	PM	3/96
Approved by	Peeter Mannik, P.E.	

ENGINEER OF RECORD:
DYER, RIDDLE, MILLS AND PRECOURT, INC.
1506 EAST COLONIAL DRIVE
ORLANDO, FLORIDA 32803

LOGO: DRMP DYER, RIDDLE, MILLS & PRECOURT, INC. ENGINEERS • SURVEYORS

SEAL: Peeter Mannik 3/4/98

FLORIDA DEPARTMENT OF TRANSPORTATION
STRUCTURES DESIGN OFFICE

ROAD NO.	COUNTY	PROJECT NO.
SR414	SEMINOLE	77002-3503

SHEET TITLE: PIER NO. 6

PROJECT NAME: MAITLAND BOULEVARD OVER LAKE BOSSE

Drawing No. 2 Of 2

Index No.

JA/JS02/07/97 4:19Pv \DGDBR\LKB\LKBPR-5.DWG

FED. ROAD DIV. NO.	STATE	PROJECT NO.	FISCAL YEAR	SHEET NO.
3	FLA.		98	8-31

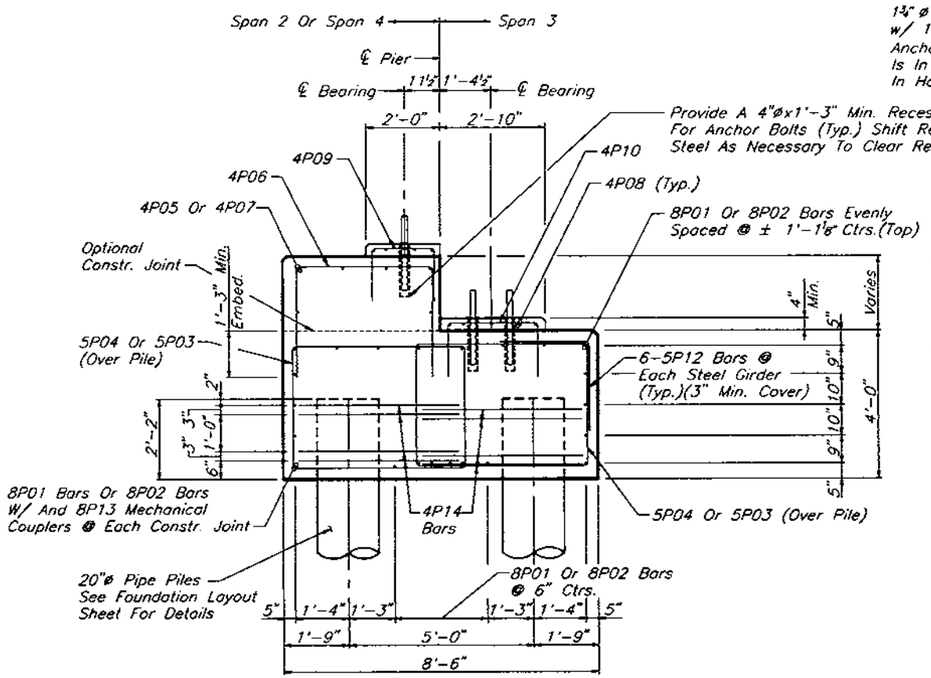

SECTION B-B
AT PIER NO.3 & PIER NO.4

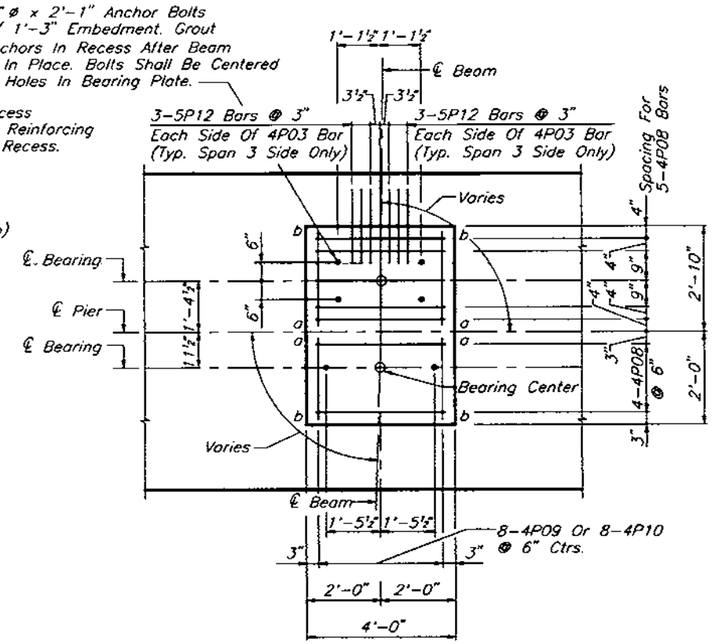

PEDESTAL DETAIL
Piers No. 3 & 4 Only

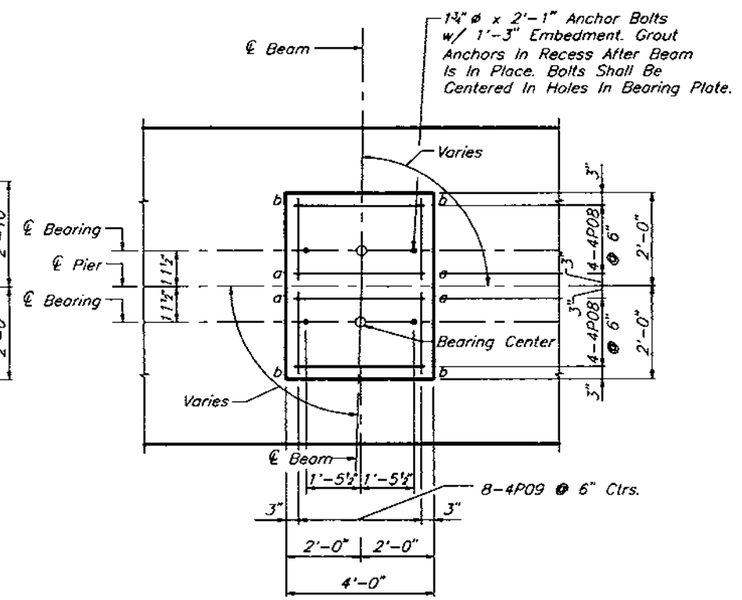

PEDESTAL DETAIL
Piers No. 2, 5, & 6

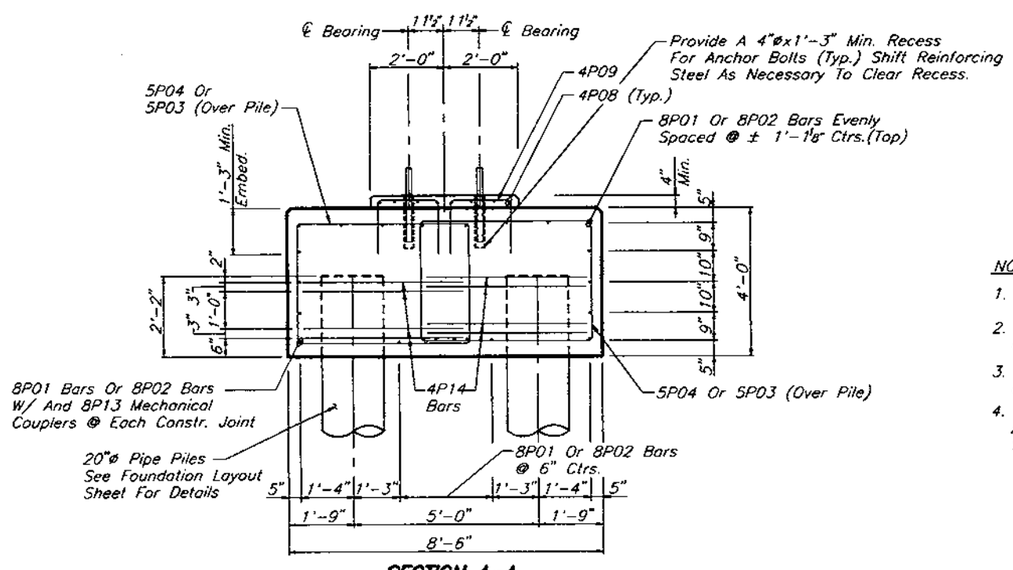

SECTION A-A

	UNFACTORED JACKING LOADS		
	Dead Load (Tons)	Live Load & Impact (Tons)	Total (Tons)
Spans 1,2,4, 5 & 6	75	35	110
Spans 3	123	69	192

Jacks Should Be Equipped To Lift All Beams At The Same Substructure Unit Simultaneously. For Additional Jacking Notes See General Notes Sheet A-2. Loads Are Given Per Jack.

NOTES:

1. Work This Sheet With Pier Sheets.
2. Points a And b Refer To The Pedestal Corner Elevations Shown On The Pier Sheets.
3. All Pier Cap Concrete Shall Be Paid For Under Class IV Concrete (Mass-Substructure)
4. Non-Shrink Grout For Anchor Bolts Shall Be In Accordance With Specification Section 934 And Shall Be Listed In FDOT's Qualified Products List.

ESTIMATED QUANTITIES

ITEM		UNIT	QUANTITY: PIER NO.2, 5 OR 6 (3 Required)		PIER NO.3 OR 4 (2 Required)	
			PHASE II	PHASE III	PHASE II	PHASE III
Class IV Concrete (Mass-Substructure)	Pedestals	C.Y.	2.17	0.81	2.62	0.98
	Cap		104.40	49.84	130.57	62.24
	Total		106.57	50.65	133.19	63.22
Reinforcing Steel (Substructure)		LB	10,176	5,271	11,183	5,727
Steel Piling (20" Dia. Pipe)		FT.	*		*	
Non-Shrink Grout		C.F.	*		*	

* See CES (Summary Of Bridge Pay Items)

REVISIONS					
Date	By	Description	Date	By	Description

	Names	Dates
Drawn by	JLA/JJS	3/96
Checked by	MKA	3/96
Designed by	MKA	3/96
Checked by	PM	3/96
Approved by	Peeter Mannik, P.E.	

ENGINEER OF RECORD:
DYER, RIDDLE, MILLS AND PRECOURT, INC.
1505 EAST COLONIAL DRIVE
ORLANDO, FLORIDA 32803

LOGO: DRMP DYER, RIDDLE, MILLS & PRECOURT, INC. ENGINEERS · SURVEYORS

SEAL: Peeter Mannik 3/4/98

FLORIDA DEPARTMENT OF TRANSPORTATION
STRUCTURES DESIGN OFFICE

ROAD NO.	COUNTY	PROJECT NO.
SR414	SEMINOLE	77002-3503

SHEET TITLE: PIER DETAILS

PROJECT NAME: MAITLAND BOULEVARD OVER LAKE BOSSE

Drawing No. 1 OF 2

Index No.

JA/JS02/07/97 4:20PM V:\DGDBR\LKB_LKBPR01.DWG

FED. ROAD DIV. NO.	STATE	PROJECT NO.	FISCAL YEAR	SHEET NO.
3	FLA.		98	B-32

PEDESTAL ELEVATIONS
PIER NO. 2 (SPAN 1)

BEAM MARK	a	b
B-1	69.492	69.493
B-2	69.735	69.736
B-3	69.978	69.979
B-4	70.221	70.222
B-5	70.464	70.465
B-6	70.706	70.708
B-7	70.470	70.471
B-8	70.233	70.234
B-9	69.996	69.998
B-10	69.759	69.761
B-11	69.522	69.524

PEDESTAL ELEVATIONS
PIER NO. 2 (SPAN 2)

BEAM MARK	a	b
B-12	69.492	69.520
B-13	69.735	69.762
B-14	69.978	70.005
B-15	70.221	70.248
B-16	70.464	70.491
B-17	70.706	70.734
B-18	70.470	70.497
B-19	70.233	70.260
B-20	69.996	70.024
B-21	69.759	69.787
B-22	69.522	69.550

PEDESTAL ELEVATIONS
PIER NO. 3 (SPAN 2)

BEAM MARK	a	b
B-12	70.087	70.089
B-13	70.329	70.331
B-14	70.570	70.572
B-15	70.811	70.814
B-16	71.053	71.055
B-17	71.294	71.296
B-18	71.056	71.058
B-19	70.817	70.819
B-20	70.579	70.581
B-21	70.340	70.342
B-22	70.102	70.104

PEDESTAL ELEVATIONS
PIER NO. 3 (SPAN 3)

BEAM MARK	a	b
G-23	68.051	68.064
G-24	68.292	68.305
G-25	68.533	68.546
G-26	68.775	68.788
G-27	69.016	69.029
G-28	69.258	69.270
G-29	69.019	69.034
G-30	68.781	68.795
G-31	68.542	68.556
G-32	68.304	68.318
G-33	68.065	68.079

PEDESTAL ELEVATIONS
PIER NO. 4 (SPAN 3)

BEAM MARK	a	b
G-23	68.067	68.080
G-24	68.308	68.320
G-25	68.548	68.561
G-26	68.789	68.801
G-27	69.029	69.041
G-28	69.269	69.282
G-29	69.030	69.044
G-30	68.790	68.804
G-31	68.551	68.565
G-32	68.311	68.325
G-33	68.071	68.085

PEDESTAL ELEVATIONS
PIER NO. 4 (SPAN 4)

BEAM MARK	a	b
B-34	70.030	70.036
B-35	70.270	70.276
B-36	70.511	70.516
B-37	70.751	70.757
B-38	70.991	70.997
B-39	71.232	71.238
B-40	70.992	70.998
B-41	70.752	70.758
B-42	70.513	70.519
B-43	70.273	70.279
B-44	70.034	70.039

PEDESTAL ELEVATIONS
PIER NO. 5 (SPAN 4)

BEAM MARK	a	b
B-34	69.331	69.364
B-35	69.573	69.606
B-36	69.815	69.848
B-37	70.057	70.090
B-38	70.299	70.332
B-39	70.541	70.574
B-40	70.303	70.336
B-41	70.065	70.098
B-42	69.827	69.860
B-43	69.589	69.622
B-44	69.351	69.384

PEDESTAL ELEVATIONS
PIER NO. 5 (SPAN 5)

BEAM MARK	a	b
B-45	69.331	69.335
B-46	69.573	69.577
B-47	69.815	69.819
B-48	70.057	70.061
B-49	70.299	70.303
B-50	70.541	70.545
B-51	70.303	70.307
B-52	70.065	70.069
B-53	69.827	69.831
B-54	69.589	69.593
B-55	69.351	69.355

PEDESTAL ELEVATIONS
PIER NO. 6 (SPAN 5)

BEAM MARK	a	b
B-45	68.562	68.597
B-46	68.805	68.840
B-47	69.049	69.083
B-48	69.292	69.326
B-49	69.535	69.569
B-50	69.778	69.813
B-51	69.542	69.576
B-52	69.305	69.339
B-53	69.068	69.103
B-54	68.832	68.866
B-55	68.595	68.630

PEDESTAL ELEVATIONS
PIER NO. 6 (SPAN 6)

BEAM MARK	a	b
B-56	68.562	68.567
B-57	68.805	68.810
B-58	69.049	69.053
B-59	69.292	69.296
B-60	69.535	69.539
B-61	69.778	69.783
B-62	69.542	69.546
B-63	69.305	69.309
B-64	69.068	69.073
B-65	68.832	68.836
B-66	68.595	68.600

\DOOBRY\LKB\LKBPRDT2.DWG

JA/JS02/07/97 4:21P

REVISIONS

Date	By	Description	Date	By	Description

	Names	Dates
Drawn by	JLA/JJS	3/96
Checked by	MKA	3/96
Designed by	MKA	3/96
Checked by	PM	3/96
Approved by	Peeter Mannik, P.E.	

ENGINEER OF RECORD:
DYER, RIDDLE, MILLS AND PRECOURT, INC.
1506 EAST COLONIAL DRIVE
ORLANDO, FLORIDA 32803

LOGO: DRMP DYER, RIDDLE, MILLS & PRECOURT, INC. ENGINEERS · SURVEYORS

SEAL: Peeter Mannik 3/4/98

FLORIDA DEPARTMENT OF TRANSPORTATION
STRUCTURES DESIGN OFFICE

ROAD NO.	COUNTY	PROJECT NO.
SR414	SEMINOLE	77002-3503

SHEET TITLE: PIER DETAILS

PROJECT NAME: MAITLAND BOULEVARD OVER LAKE BOSSE

Drawing No. 2 OF 2

Index No.

FED. ROAD DIV. NO.	STATE	PROJECT NO.	FISCAL YEAR	SHEET NO.
3	FLA.		98	8-33

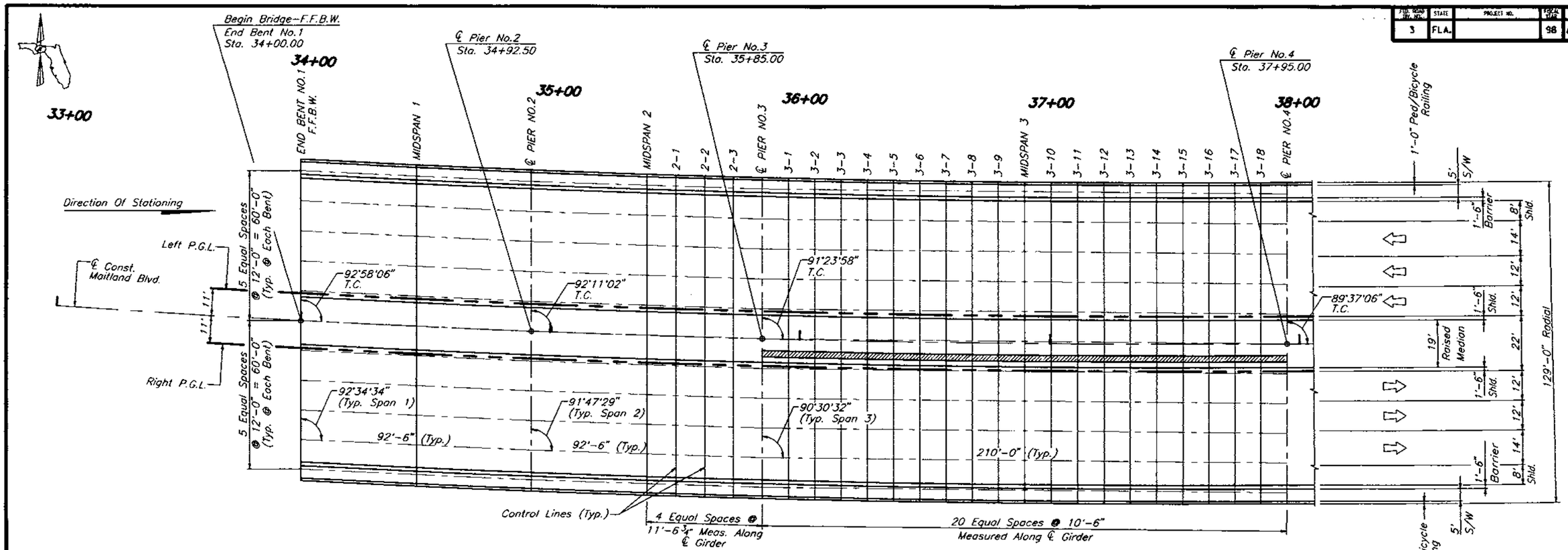

FRAMING PLAN & ROADWAY SURFACE ELEVATION GRID

NOTES:

1. Control Lines Are Parallel With Bents (S04°48'95"E).
2. For Deck Elevations See Finish Grade Elevations Sheet 3 of 3.
3. ▨ Indicates 2'-6" Closure Pour Cap.

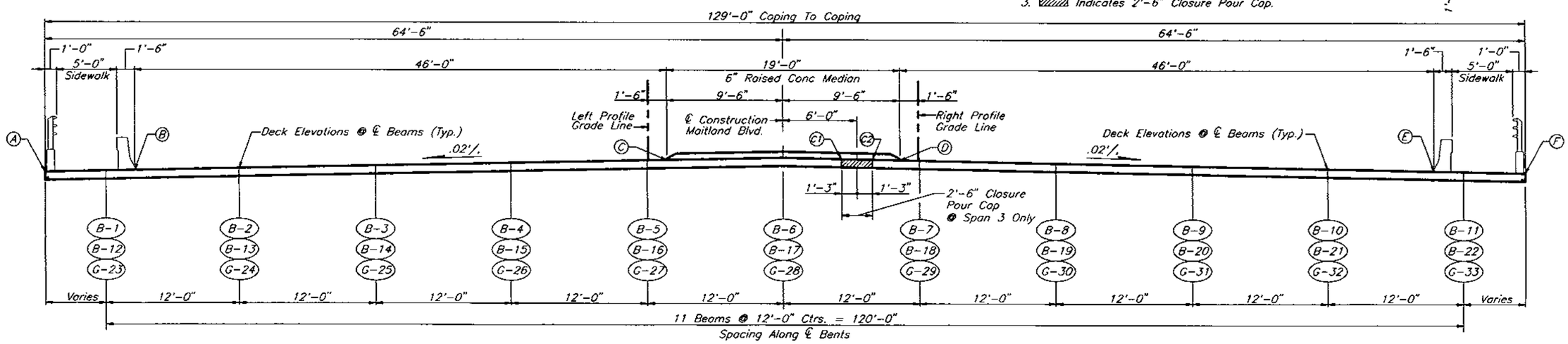

TYPICAL SECTION

Looking Up Station

REVISIONS

Date	By	Description	Date	By	Description

	Names	Dates
Drawn by	JLA/JJS	3/96
Checked by	MKA	3/96
Designed by	MKA	3/96
Checked by	PM	3/96
Approved by	Peeter Monnik, P.E.	

ENGINEER OF RECORD:
DYER, RIDDLE, MILLS AND PRECOURT, INC.
1605 EAST COLONIAL DRIVE
ORLANDO, FLORIDA 32803

LOGO: DRMP DYER, RIDDLE, MILLS & PRECOURT, INC. ENGINEERS · SURVEYORS

SEAL: Peeter Monnik 3/4/98

FLORIDA DEPARTMENT OF TRANSPORTATION
STRUCTURES DESIGN OFFICE

ROAD NO.	COUNTY	PROJECT NO.
SR414	SEMINOLE	77002-3503

SHEET TITLE: FINISH GRADE ELEVATIONS

PROJECT NAME: MAITLAND BOULEVARD OVER LAKE BOSSE

Drawing No. 1 of 3

Index No.

JA/JS04/02/97 08:31AM M:\000BR\LK8\LK8FGE1.DWG

FED. ROAD DIV. NO.	STATE	PROJECT NO.	FISCAL YEAR	SHEET NO.
3	FLA.		98	B-34

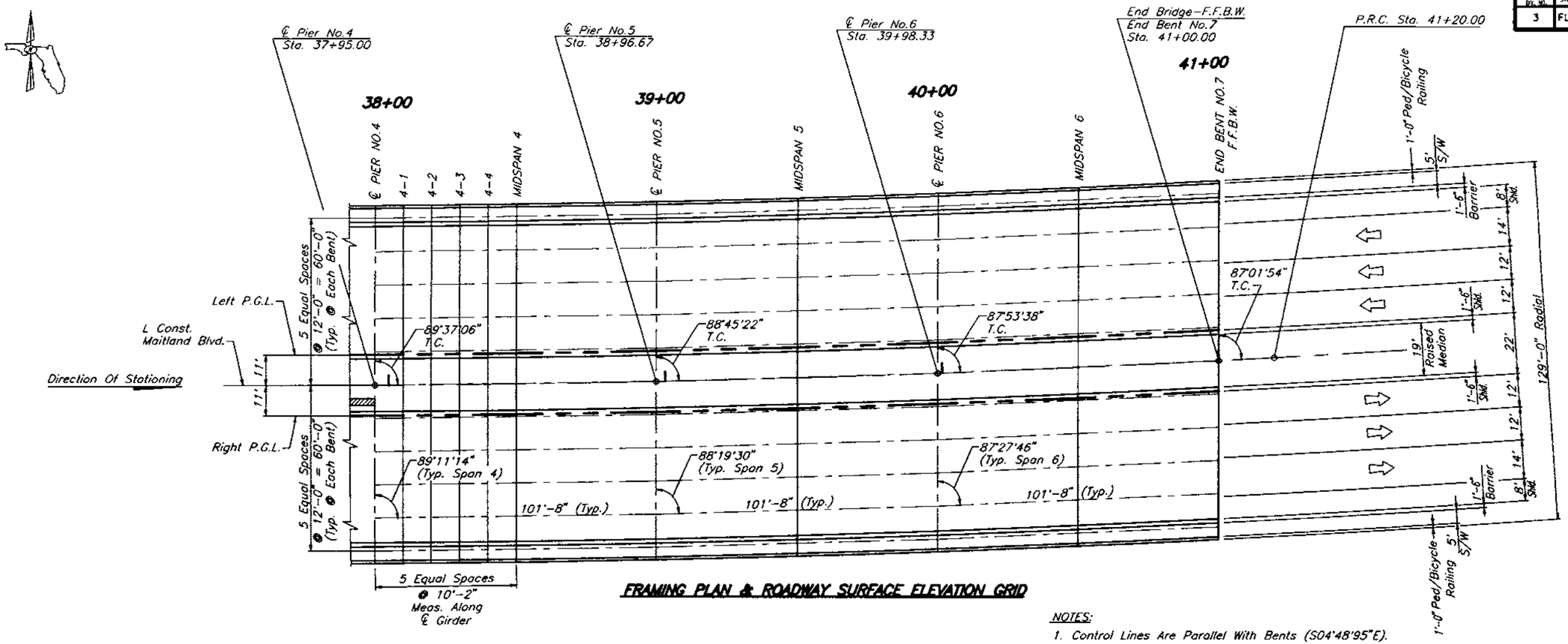

FRAMING PLAN & ROADWAY SURFACE ELEVATION GRID

NOTES:

1. Control Lines Are Parallel With Bents (S04°48'95"E).
2. For Deck Elevations See Finish Grade Elevations Sheet 3 of 3.
3. ▨ Indicates 2'-6" Closure Pour Cap (@ Span 3 Only).

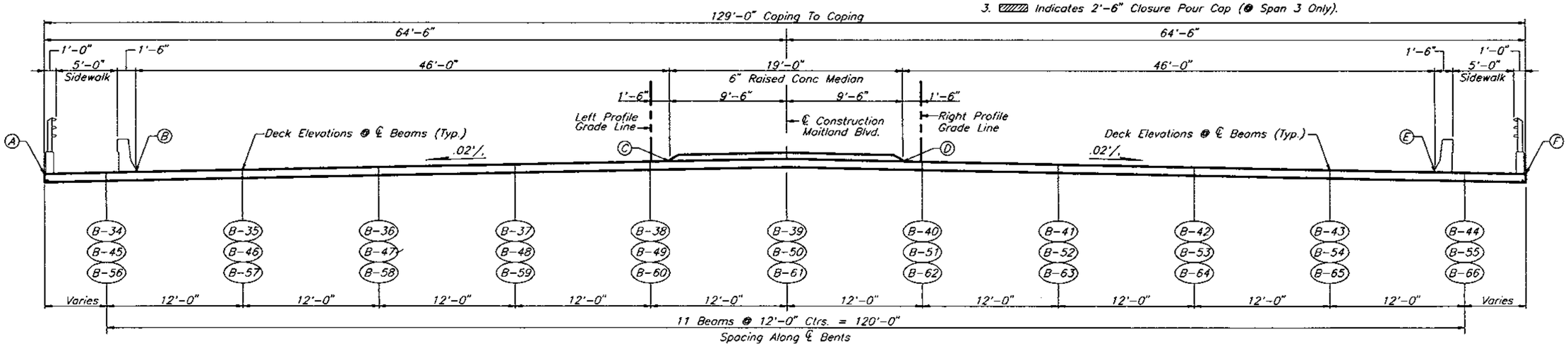

TYPICAL SECTION

Looking Up Station

REVISIONS					
Date	By	Description	Date	By	Description

	Names	Dates
Drawn by	JLA/JJS	3/96
Checked by	MKA	3/96
Designed by	MKA	3/96
Checked by	PM	3/96
Approved by	Peeter Mannik, P.E.	

ENGINEER OF RECORD:
DYER, RIDDLE, MILLS AND PRECOURT, INC.
1505 EAST COLONIAL DRIVE
ORLANDO, FLORIDA 32803

LOGO: DRMP

SEAL: Peeter Mannik 3/4/98

FLORIDA DEPARTMENT OF TRANSPORTATION
STRUCTURES DESIGN OFFICE

ROAD NO.	COUNTY	PROJECT NO.
SR414	SEMINOLE	77002-3503

SHEET TITLE: FINISH GRADE ELEVATIONS

PROJECT NAME: MAITLAND BOULEVARD OVER LAKE BOSSE

Drawing No. 2 of 3

Index No.

JA/-S04/02/97 08:37AM M:\000BR\LKB\LKBFGE2.DWG

FED. ROAD DIV. NO.	STATE	PROJECT NO.	FISCAL YEAR	SHEET NO.
3	FLA.		98	B-35

LOCATION	EB. NO.1	MIDSPAN 1	LOCATION	PIER NO. 2	MIDSPAN 2	2-1	2-2	2-3
(A) LT. COPING	75.908	76.219	LT. COPING	76.530	76.841	76.919	76.995	77.064
B-1	76.001	76.308	B-12	76.622	76.930	77.008	77.084	77.153
(B) LT. GUTTER LINE	76.060	76.371	LT. GUTTER LINE	76.682	76.993	77.071	77.146	77.215
B-2	76.245	76.552	B-13	76.865	77.172	77.250	77.326	77.395
B-3	76.488	76.795	B-14	77.108	77.415	77.492	77.568	77.637
B-4	76.732	77.038	B-15	77.351	77.657	77.735	77.810	77.879
B-5	76.976	77.282	B-16	77.594	77.899	77.977	78.052	78.120
P.G.L.	76.996	77.305	P.G.L.	77.614	77.923	78.000	78.074	78.142
(C) LT. MED. GUTTER LINE	77.027	77.336	LT. MED. GUTTER LINE	77.644	77.953	78.030	78.104	78.172
B-6	77.220	77.525	B-17	77.837	78.142	78.219	78.293	78.362
CL	77.220	77.528	CL	77.837	78.145	78.222	78.296	78.363
(D) RT. MED. GUTTER LINE	77.033	77.341	RT. MED. GUTTER LINE	77.649	77.957	78.034	78.107	78.175
P.G.L.	77.004	77.312	P.G.L.	77.619	77.927	78.004	78.078	78.145
B-7	76.984	77.292	B-18	77.600	77.911	77.987	78.060	78.126
B-8	76.749	77.056	B-19	77.363	77.673	77.750	77.822	77.888
B-9	76.513	76.820	B-20	77.126	77.436	77.512	77.585	77.650
B-10	76.278	76.584	B-21	76.889	77.199	77.275	77.347	77.412
(E) RT. GUTTER LINE	76.100	76.405	RT. GUTTER LINE	76.711	77.017	77.093	77.165	77.231
B-11	76.042	76.348	B-22	76.653	76.961	77.037	77.109	77.174
(F) RT. COPING	75.952	76.258	RT. COPING	76.563	76.868	76.945	77.017	77.083

LOCATION	PIER NO. 3	3-1	3-2	3-3	3-4	3-5	3-6	3-7	3-8	3-9	MIDSPAN 3	3-10	3-11	3-12	3-13	3-14	3-15	3-16	3-17	3-18
(A) LT. COPING	77.126	77.178	77.224	77.264	77.300	77.330	77.355	77.374	77.388	77.397	77.401	77.399	77.392	77.379	77.362	77.339	77.310	77.277	77.238	77.194
G-23	77.217	77.265	77.308	77.347	77.380	77.408	77.431	77.449	77.463	77.471	77.474	77.473	77.466	77.454	77.438	77.416	77.390	77.358	77.322	77.280
(B) LT. GUTTER LINE	77.277	77.328	77.374	77.415	77.450	77.480	77.505	77.524	77.538	77.547	77.551	77.549	77.542	77.529	77.512	77.489	77.460	77.427	77.388	77.344
G-24	77.459	77.507	77.549	77.587	77.620	77.648	77.671	77.690	77.703	77.711	77.714	77.713	77.706	77.694	77.678	77.656	77.630	77.598	77.562	77.521
G-25	77.700	77.748	77.790	77.828	77.861	77.889	77.912	77.930	77.943	77.951	77.954	77.953	77.946	77.934	77.918	77.896	77.870	77.839	77.802	77.761
G-26	77.942	77.989	78.031	78.069	78.102	78.129	78.152	78.170	78.183	78.191	78.194	78.192	78.186	78.174	78.158	78.136	78.110	78.079	78.042	78.001
G-27	78.183	78.230	78.272	78.310	78.342	78.370	78.393	78.410	78.423	78.431	78.434	78.432	78.426	78.414	78.398	78.376	78.350	78.319	78.283	78.242
P.G.L.	78.203	78.253	78.298	78.338	78.373	78.402	78.426	78.445	78.459	78.467	78.471	78.469	78.461	78.449	78.431	78.408	78.380	78.347	78.309	78.265
(C) LT. MED. GUTTER LINE	78.233	78.283	78.329	78.368	78.403	78.432	78.456	78.475	78.489	78.497	78.501	78.499	78.491	78.479	78.461	78.438	78.410	78.377	78.339	78.295
G-28	78.424	78.471	78.513	78.551	78.583	78.610	78.633	78.651	78.663	78.671	78.674	78.672	78.666	78.654	78.638	78.616	78.590	78.559	78.523	78.482
CL	78.424	78.474	78.519	78.559	78.593	78.623	78.647	78.665	78.679	78.687	78.691	78.689	78.681	78.669	78.651	78.628	78.600	78.567	78.529	78.485
C1 CLOSURE POUR CAP	78.109	78.159	78.204	78.244	78.278	78.308	78.332	78.350	78.364	78.372	78.376	78.374	78.366	78.354	78.336	78.313	78.285	78.252	78.214	78.170
C2 CLOSURE POUR CAP	77.964	78.014	78.059	78.099	78.133	78.163	78.187	78.205	78.219	78.227	78.231	78.229	78.221	78.209	78.191	78.168	78.140	78.107	78.069	78.025
(D) RT. MED. GUTTER LINE	78.236	78.285	78.330	78.370	78.404	78.433	78.457	78.476	78.489	78.497	78.501	78.499	78.491	78.479	78.461	78.438	78.410	78.377	78.339	78.295
P.G.L.	78.206	78.256	78.300	78.340	78.374	78.403	78.427	78.446	78.459	78.467	78.471	78.469	78.461	78.449	78.431	78.408	78.380	78.347	78.309	78.265
G-29	78.186	78.239	78.286	78.328	78.364	78.395	78.421	78.441	78.455	78.464	78.467	78.465	78.457	78.444	78.425	78.401	78.371	78.336	78.295	78.248
G-30	77.947	78.000	78.047	78.089	78.125	78.156	78.181	78.201	78.215	78.224	78.227	78.225	78.217	78.204	78.185	78.161	78.131	78.096	78.055	78.009
G-31	77.709	77.761	77.808	77.850	77.886	77.916	77.941	77.961	77.975	77.984	77.987	77.985	77.977	77.964	77.945	77.921	77.891	77.856	77.815	77.769
G-32	77.470	77.523	77.569	77.611	77.647	77.677	77.702	77.721	77.735	77.744	77.747	77.745	77.737	77.723	77.705	77.681	77.651	77.616	77.575	77.529
(E) RT. GUTTER LINE	77.291	77.340	77.384	77.423	77.456	77.485	77.508	77.527	77.540	77.548	77.551	77.548	77.541	77.529	77.511	77.488	77.460	77.428	77.389	77.346
G-33	77.232	77.284	77.330	77.372	77.407	77.437	77.462	77.482	77.495	77.504	77.507	77.505	77.497	77.483	77.465	77.440	77.411	77.376	77.335	77.289
(F) RT. COPING	77.142	77.191	77.235	77.273	77.307	77.335	77.359	77.377	77.390	77.398	77.401	77.398	77.391	77.379	77.361	77.338	77.310	77.278	77.240	77.196

LOCATION	PIER NO. 4	4-1	4-2	4-3	4-4	MIDSPAN 4	LOCATION	PIER NO. 5	MIDSPAN 5	LOCATION	PIER NO. 6	MIDSPAN 6	LOCATION	EB. NO. 7
(A) LT. COPING	77.144	77.091	77.033	76.970	76.902	76.829	LT. COPING	76.444	76.060	LT. COPING	75.675	75.290	LT. COPING	74.905
B-34	77.234	77.180	77.121	77.057	76.989	76.916	B-45	76.535	76.147	B-56	75.767	75.378	B-56	74.998
(B) LT. GUTTER LINE	77.294	77.241	77.183	77.121	77.053	76.980	LT. GUTTER LINE	76.596	76.211	LT. GUTTER LINE	75.827	75.442	LT. GUTTER LINE	75.058
B-35	77.475	77.420	77.361	77.298	77.230	77.157	B-46	76.777	76.390	B-57	76.010	75.622	B-57	75.242
B-36	77.715	77.661	77.602	77.539	77.471	77.398	B-47	77.019	76.632	B-58	76.253	75.866	B-58	75.487
B-37	77.955	77.901	77.843	77.780	77.712	77.640	B-48	77.261	76.875	B-59	76.496	76.110	B-59	75.731
B-38	78.196	78.142	78.084	78.021	77.953	77.881	B-49	77.503	77.117	B-60	76.739	76.354	B-60	75.976
P.G.L.	78.216	78.163	78.106	78.044	77.977	77.905	P.G.L.	77.523	77.141	P.G.L.	76.759	76.378	P.G.L.	75.996
(C) LT. MED. GUTTER LINE	78.246	78.193	78.136	78.074	78.007	77.935	LT. MED. GUTTER LINE	77.553	77.172	LT. MED. GUTTER LINE	76.790	76.408	LT. MED. GUTTER LINE	76.026
B-39	78.436	78.382	78.324	78.261	78.194	78.122	B-50	77.745	77.360	B-61	76.983	76.597	B-61	76.220
CL	78.436	78.384	78.327	78.265	78.198	78.126	CL	77.745	77.364	CL	76.983	76.601	CL	76.220
(D) RT. MED. GUTTER LINE	78.246	78.194	78.137	78.075	78.009	77.937	RT. MED. GUTTER LINE	77.557	77.176	RT. MED. GUTTER LINE	76.795	76.414	RT. MED. GUTTER LINE	76.034
P.G.L.	78.216	78.164	78.107	78.045	77.979	77.907	P.G.L.	77.527	77.146	P.G.L.	76.766	76.385	P.G.L.	76.004
B-40	78.197	78.146	78.090	78.029	77.962	77.891	B-51	77.507	77.130	B-62	76.746	76.369	B-62	75.985
B-41	77.957	77.906	77.850	77.790	77.723	77.652	B-52	77.269	76.893	B-63	76.509	76.133	B-63	75.750
B-42	77.717	77.667	77.611	77.550	77.484	77.413	B-53	77.031	76.656	B-64	76.273	75.898	B-64	75.515
B-43	77.478	77.427	77.372	77.311	77.246	77.175	B-54	76.793	76.418	B-65	76.036	75.662	B-65	75.280
(E) RT. GUTTER LINE	77.298	77.246	77.190	77.129	77.063	76.992	RT. GUTTER LINE	76.614	76.236	RT. GUTTER LINE	75.858	75.480	RT. GUTTER LINE	75.102
B-44	77.238	77.188	77.132	77.072	77.007	76.936	B-55	76.555	76.181	B-66	75.800	75.426	B-66	75.045
(F) RT. COPING	77.148	77.097	77.040	76.979	76.913	76.843	RT. COPING	76.465	76.088	RT. COPING	75.710	75.333	RT. COPING	74.955

REVISIONS

Date	By	Description	Date	By	Description

	Names	Dates
Drawn by	JLA/JJS	3/96
Checked by	MKA	3/96
Designed by	MKA	3/96
Checked by	PM	3/96
Approved by	Peeter Mannik, P.E.	

ENGINEER OF RECORD:
DYER, RIDDLE, MILLS AND PRECOURT, INC.
1505 EAST COLONIAL DRIVE
ORLANDO, FLORIDA 32803

LOGO:
DRMP
DYER, RIDDLE, MILLS & PRECOURT, INC. ENGINEERS · SURVEYORS

SEAL:
3/4/98

FLORIDA DEPARTMENT OF TRANSPORTATION
STRUCTURES DESIGN OFFICE

ROAD NO.	COUNTY	PROJECT NO.
SR414	SEMINOLE	77002-3503

SHEET TITLE:
FINISH GRADE ELEVATIONS

PROJECT NAME:
MAITLAND BOULEVARD OVER LAKE BOSSE

Drawing No.: 3 of 3

Index No.:

FED. ROAD DIV. NO.	STATE	PROJECT NO.	FISCAL YEAR	SHEET NO.
3	FLA.		98	B-36

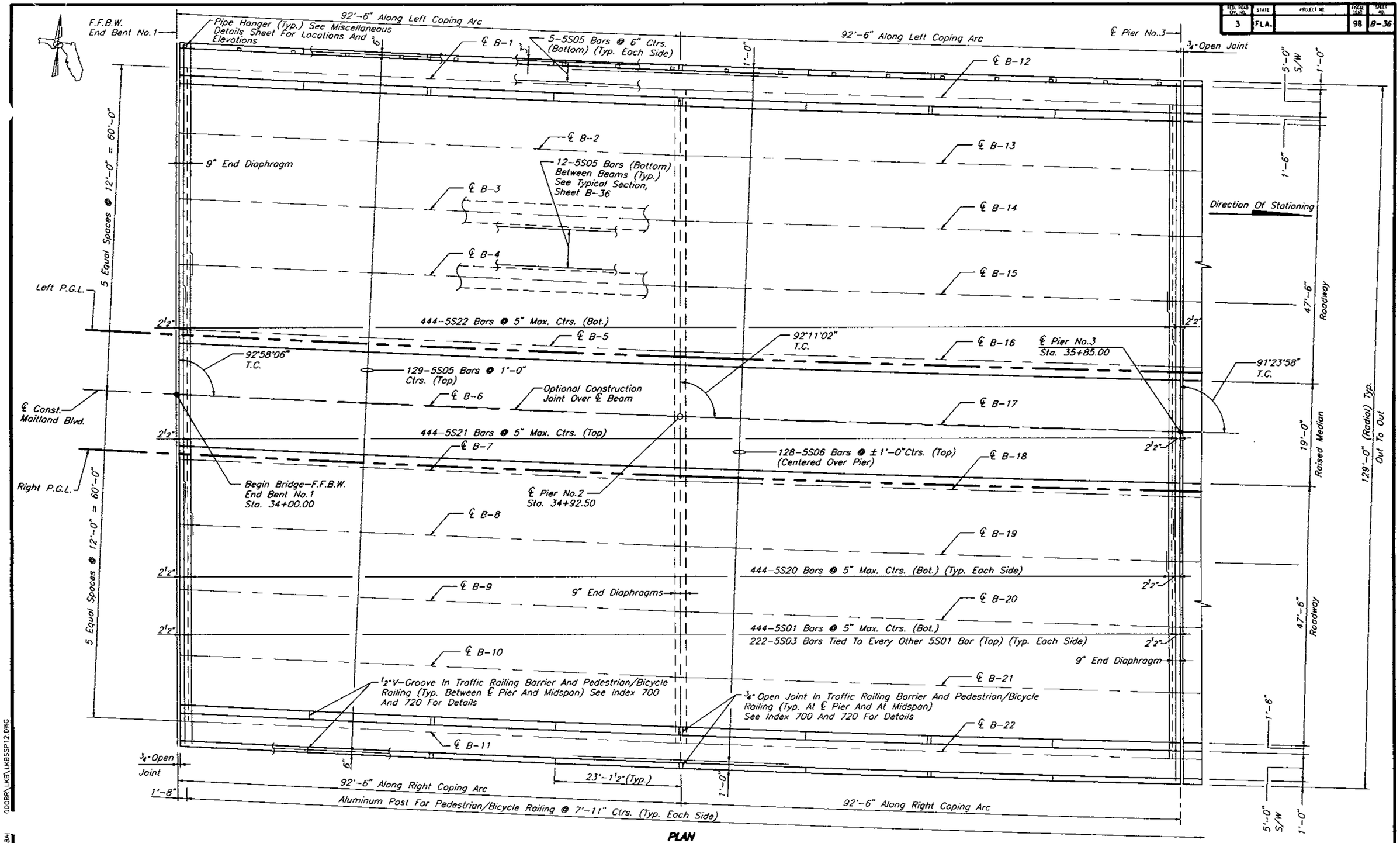

PLAN

REVISIONS					
Date	By	Description	Date	By	Description

	Names	Date
Drawn by	J.L.A./J.J.S.	3/96
Checked by	M.K.A.	3/96
Designed by	M.K.A.	3/96
Checked by	P.M.	3/96
Approved by	Peeter Monnik, P.E.	

ENGINEER OF RECORD:
DYER, RIDDLE, MILLS AND PRECOURT, INC.
1506 EAST COLONIAL DRIVE
ORLANDO, FLORIDA 32803

LOGO: DRMP

SEAL: Peeter Monnik 3/4/98

FLORIDA DEPARTMENT OF TRANSPORTATION
STRUCTURES DESIGN OFFICE

ROAD NO.	COUNTY	PROJECT NO.
SR414	SEMINOLE	77002-3503

SHEET TITLE: **SUPERSTRUCTURE SPANS 1 AND 2**

PROJECT NAME: **MAITLAND BOULEVARD OVER LAKE BOSSE**

Drawing No.

Index No.

JA/JS04/02/97 09:58AM

000BR\LKB\LKBSSP12.DWG

FED. ROAD DIV. NO.	STATE	PROJECT NO.	FISCAL YEAR	SHEET NO.
3	FLA.		98	B-37

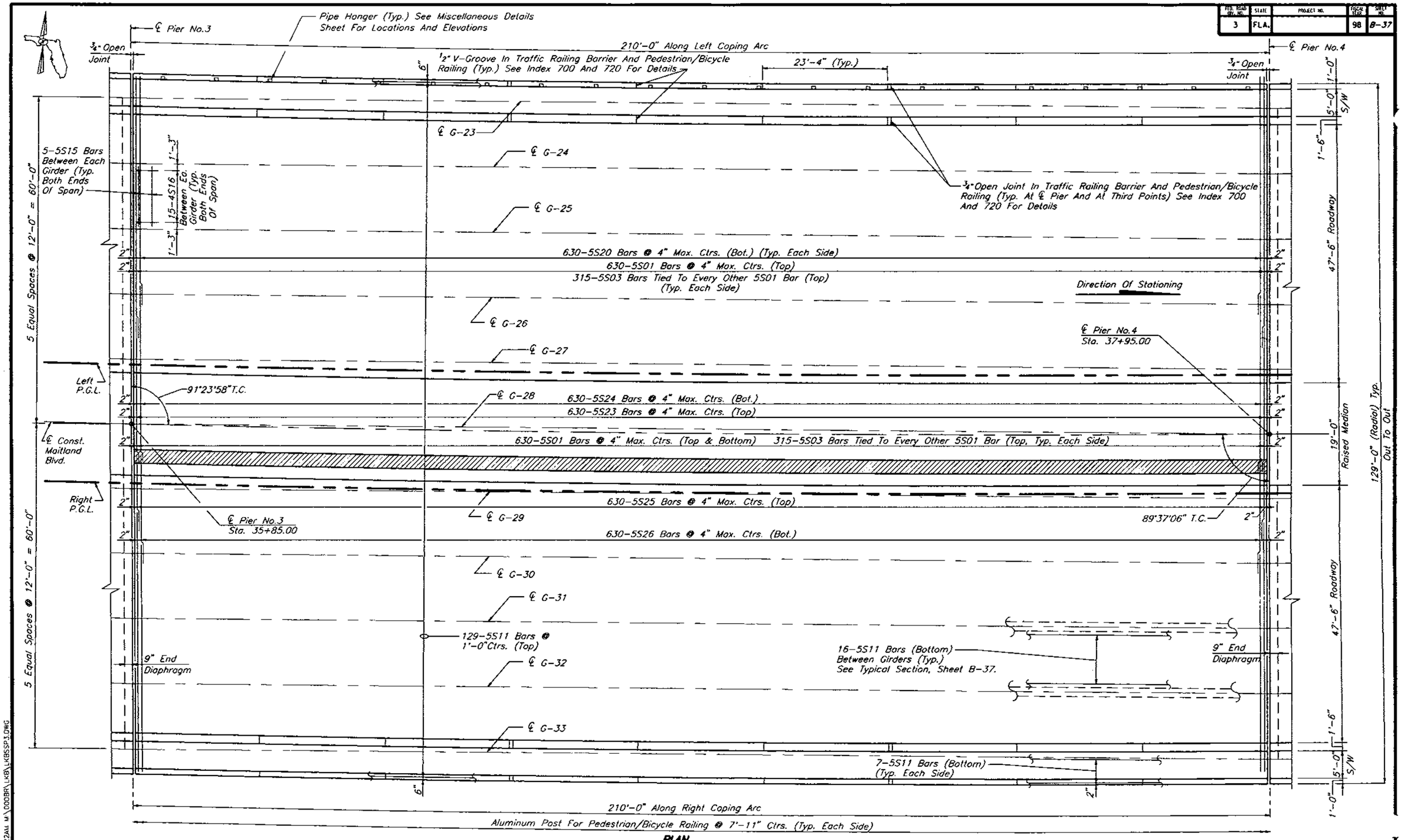

PLAN

REVISIONS					
Date	By	Description	Date	By	Description

	Names	Dates
Drawn by	JLA/JJS	3/96
Checked by	MKA	3/96
Designed by	MKA	3/96
Checked by	PM	3/96
Approved by	Peeter Mannik, P.E.	

ENGINEER OF RECORD:
DYER, RIDDLE, MILLS AND PRECOURT, INC.
1506 EAST COLONIAL DRIVE
ORLANDO, FLORIDA 32803

LOGO: DRMP DYER, RIDDLE, MILLS & PRECOURT, INC. ENGINEERS · SURVEYORS

SEAL: Peeter Mannik 3/4/98

FLORIDA DEPARTMENT OF TRANSPORTATION
STRUCTURES DESIGN OFFICE

ROAD NO.	COUNTY	PROJECT NO.
SR414	SEMINOLE	77002-3503

SHEET TITLE: **SUPERSTRUCTURE SPAN 3**

PROJECT NAME: **MAITLAND BOULEVARD OVER LAKE BOSSE**

Drawing No.

Index No.

JA/JS04/07/97 08:22AM M:\000BR\LKB\LKBSSP3.DWG

FED. ROAD DIV. NO.	STATE	PROJECT NO.	FISCAL YEAR	SHEET NO.
3	FLA.		98	B-38

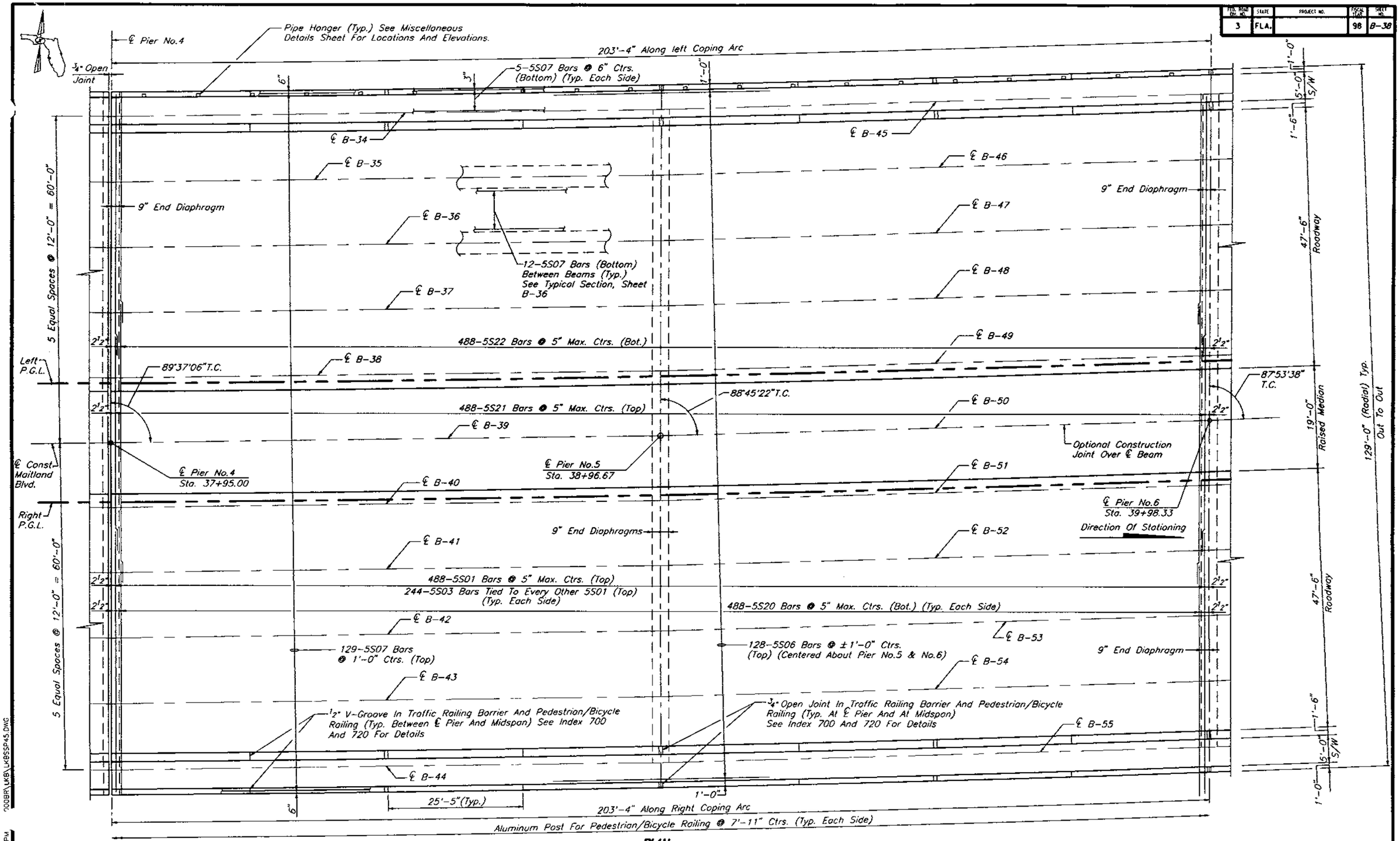

PLAN

REVISIONS					
Date	By	Description	Date	By	Description

	Names	Dates
Drawn by	JLA/JJS	3/96
Checked by	MKA	3/96
Designed by	MKA	3/96
Checked by	PM	3/96
Approved by	Peeter Mannik, P.E.	

ENGINEER OF RECORD:
DYER, RIDDLE, MILLS AND PRECOURT, INC.
1605 EAST COLONIAL DRIVE
ORLANDO, FLORIDA 32803

LOGO: DRMP DYER, RIDDLE, MILLS & PRECOURT, INC. ENGINEERS · SURVEYORS

SEAL: Peter Mannik 3/4/98

FLORIDA DEPARTMENT OF TRANSPORTATION
STRUCTURES DESIGN OFFICE

ROAD NO.	COUNTY	PROJECT NO.
SR414	SEMINOLE	77002-3503

SHEET TITLE: **SUPERSTRUCTURE SPANS 4 AND 5**

PROJECT NAME: **MAITLAND BOULEVARD OVER LAKE BOSSE**

Drawing No.

Index No.

000BRI\LKB\LKBSSP45.DWG

JA/JS04/02/97 2:55PM

FED. ROAD DIV. NO.	STATE	PROJECT NO.	FISCAL YEAR	SHEET NO.
3	FLA.		98	B-39

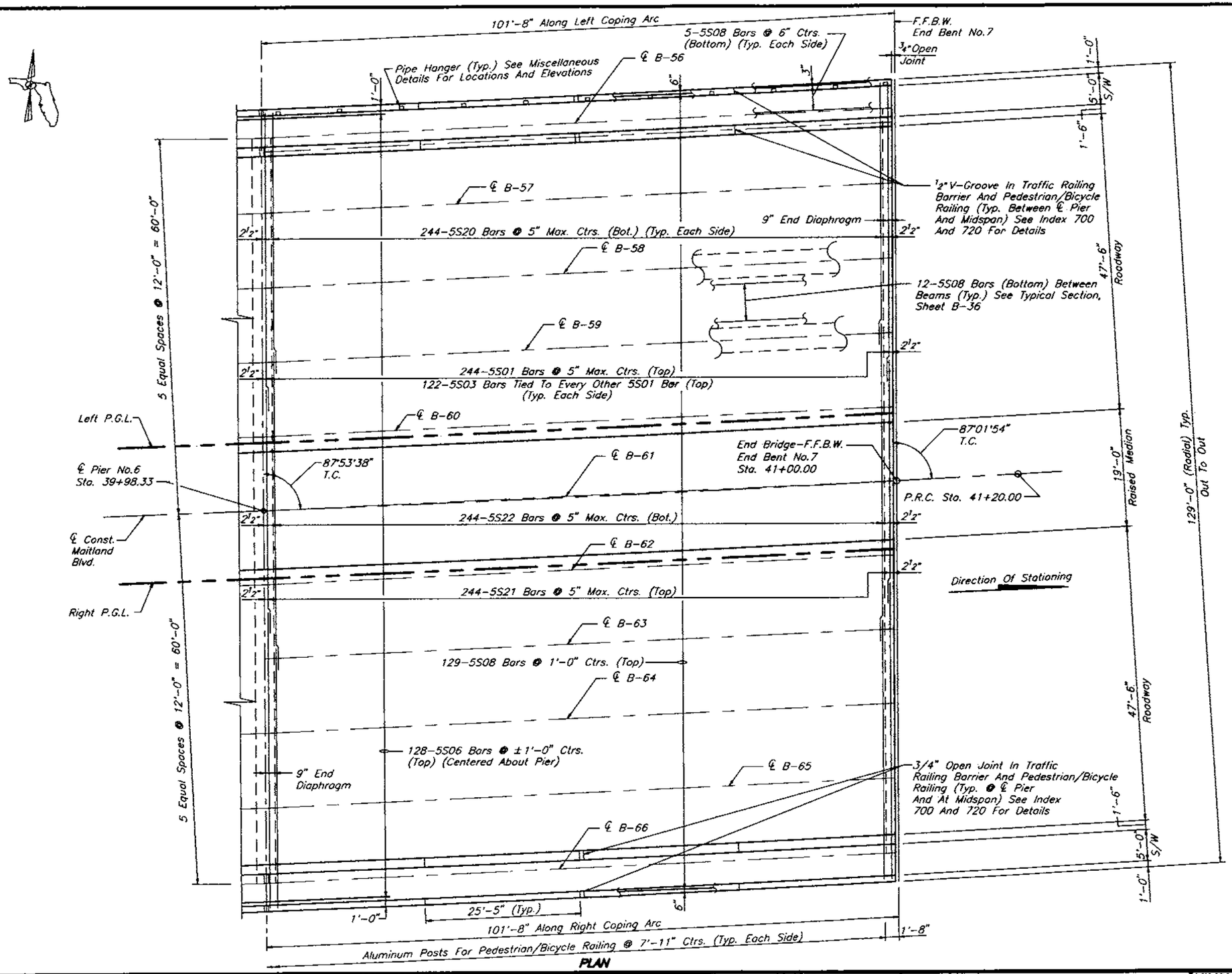

PLAN

REVISIONS					
Date	By	Description	Date	By	Description

	Names	Dates
Drawn by	J.L.A./J.J.S.	3/96
Checked by	M.K.A.	3/96
Designed by	M.K.A.	3/96
Checked by	P.M.	3/96
Approved by	Peeter Mannik, P.E.	

ENGINEER OF RECORD:
DYER, RIDDLE, MILLS AND PRECOURT, INC.
1605 EAST COLONIAL DRIVE
ORLANDO, FLORIDA 32803

LOGO: DRMP DYER, RIDDLE, MILLS & PRECOURT, INC. ENGINEERS · SURVEYORS

SEAL: Peeter Mannik 3/4/98

FLORIDA DEPARTMENT OF TRANSPORTATION
STRUCTURES DESIGN OFFICE

ROAD NO.	COUNTY	PROJECT NO.
SR414	SEMINOLE	77002-3503

SHEET TITLE: **SUPERSTRUCTURE SPAN 6**

PROJECT NAME: **MAITLAND BOULEVARD OVER LAKE BOSSE**

Drawing No.

Index No.

JA/JS04/02/97 3:60PM M:\000BR\LK6\LK6SSP6.DWG

FED. ROAD DIV. NO.	STATE	PROJECT NO.	FISCAL YEAR	SHEET NO.
3	FLA.		98	B-40

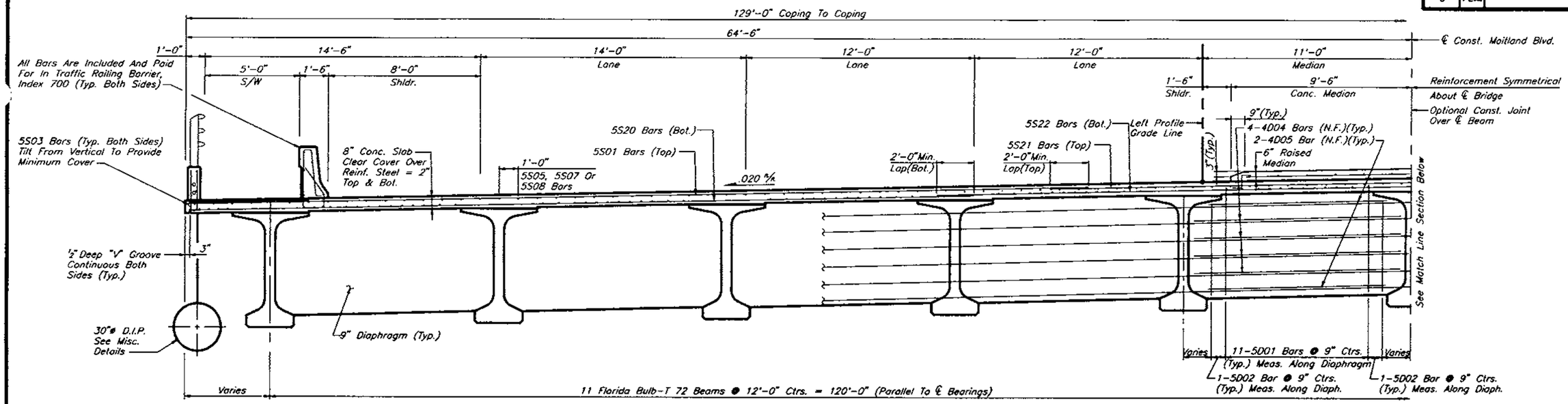

TYPICAL SECTION

NOTES:
1. All Dimensions Are Measured Radially Unless Noted Otherwise.
2. See Superstructure Details Sheet For Superstructure Notes And Details.

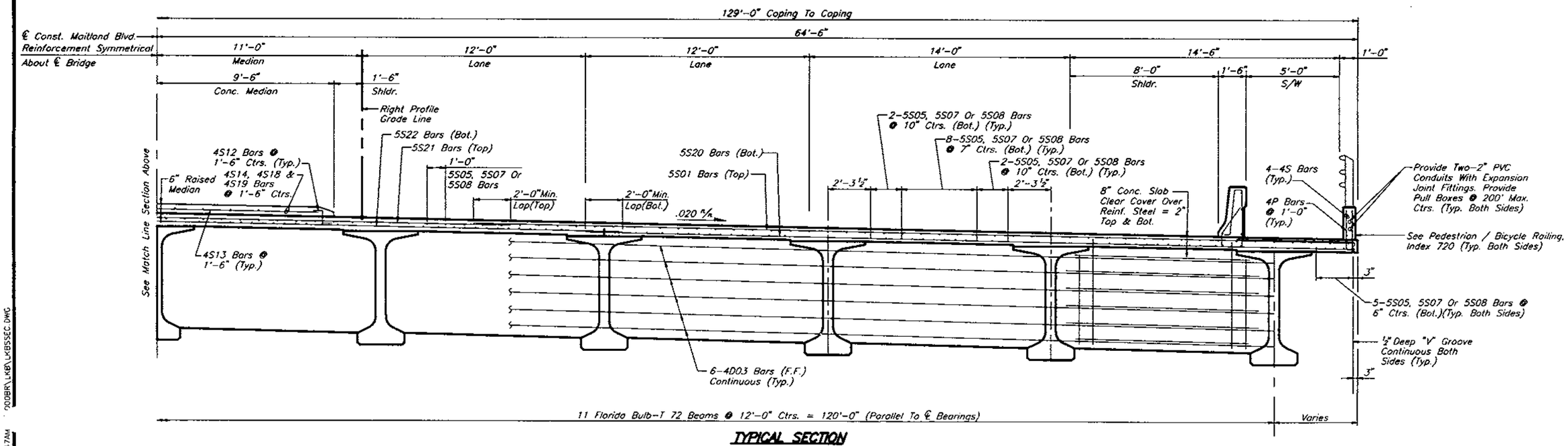

TYPICAL SECTION

REVISIONS					
Date	By	Description	Date	By	Description

	Names	Dates
Drawn by	JJS	3/96
Checked by	MKA	3/96
Designed by	MKA	3/96
Checked by	PM	3/96
Approved by	Peeter Mannik, P.E.	

ENGINEER OF RECORD:
DYER, RIDDLE, MILLS AND PRECOURT, INC.
1605 EAST COLONIAL DRIVE
ORLANDO, FLORIDA 32803

LOGO: DRMP DYER, RIDDLE, MILLS & PRECOURT, INC. ENGINEERS · SURVEYORS

SEAL: Peeter Mannik 3/4/98

FLORIDA DEPARTMENT OF TRANSPORTATION
STRUCTURES DESIGN OFFICE

ROAD NO.	COUNTY	PROJECT NO.
SR414	SEMINOLE	77002-3503

SHEET TITLE: SUPERSTRUCTURE SECTION SPANS 1, 2, 4, 5 AND 6

PROJECT NAME: MAITLAND BOULEVARD OVER LAKE BOSSE

Drawing No.

Index No.

JA/JS04/03/97 08:47AM 'OODBRY\LKB\LKBSSEC.DWG

FED. ROAD DIV. NO.	STATE	PROJECT NO.	FISCAL YEAR	SHEET NO.
3	FLA.		98	B-41

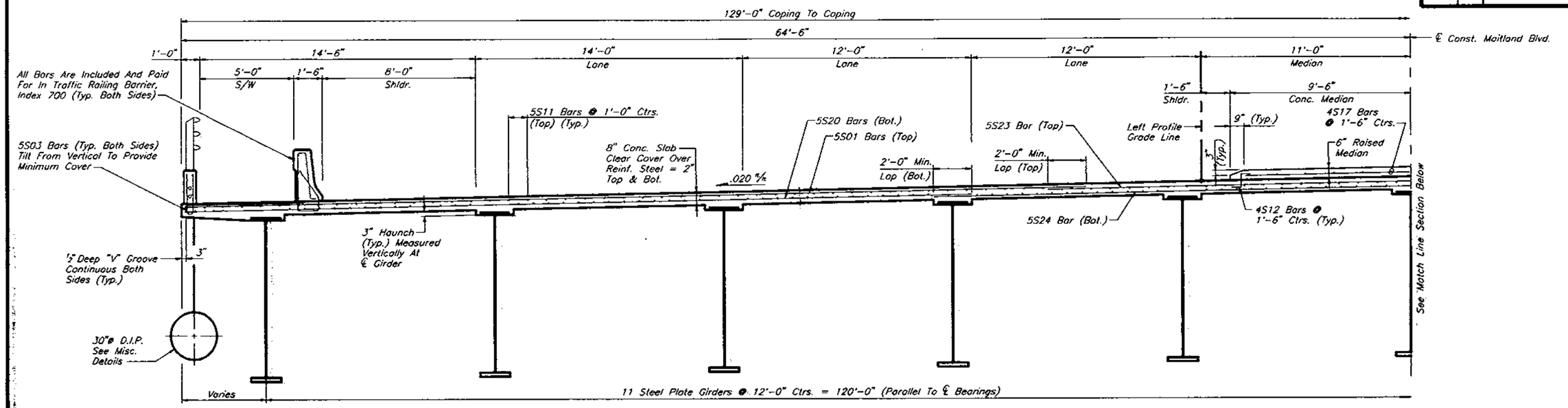

TYPICAL SECTION

NOTES:
1. All Dimensions Are Measured Radially Unless Noted Otherwise.
2. See Superstructure Details Sheet For Superstructure Notes And Details.
3. For Reinforcing Steel At Haunches, See Superstructure Details Sheet.

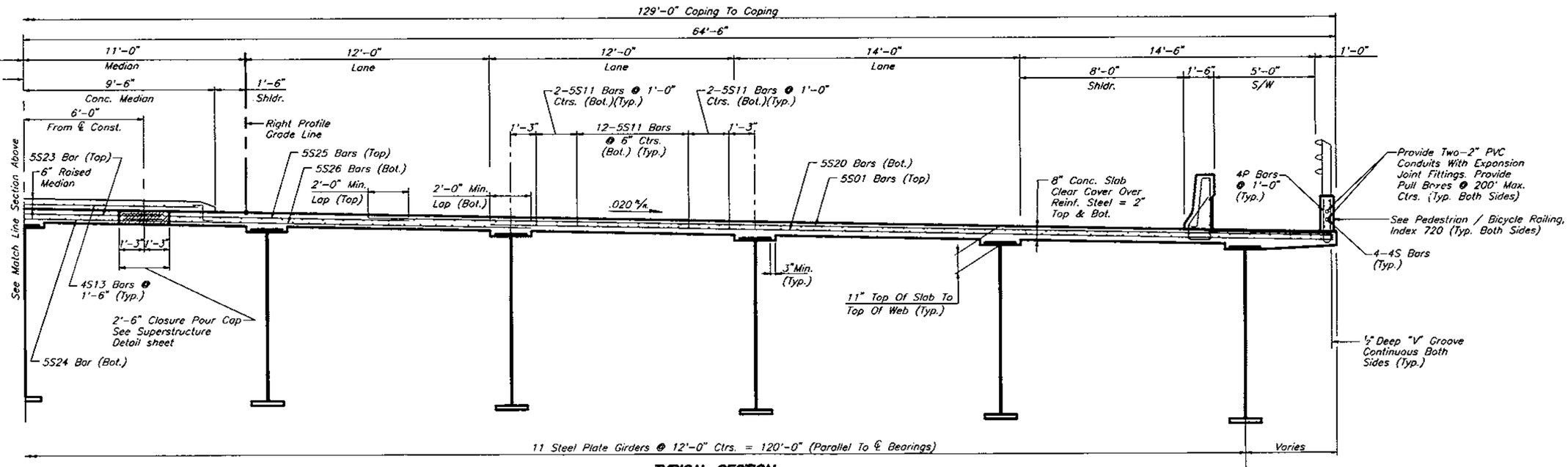

TYPICAL SECTION

REVISIONS					
Date	By	Description	Date	By	Description

	Names	Dates
Drawn by	JJS	3/96
Checked by	MKA	3/96
Designed by	MKA	3/96
Checked by	PM	3/96
Approved by	Peeler Mannik, P.E.	

ENGINEER OF RECORD:
DYER, RIDDLE, MILLS AND PRECOURT, INC.
1605 EAST COLONIAL DRIVE ORLANDO, FLORIDA 32803

LOGO: DRMP — DYER, RIDDLE, MILLS & PRECOURT, INC. ENGINEERS · SURVEYORS

SEAL: Peeler Mannik 3/4/98

FLORIDA DEPARTMENT OF TRANSPORTATION
STRUCTURES DESIGN OFFICE

ROAD NO.	COUNTY	PROJECT NO.
SR414	SEMINOLE	77002-3503

SHEET TITLE: **SUPERSTRUCTURE SECTION SPAN NO. 3**

PROJECT NAME: **MAITLAND BOULEVARD OVER LAKE BOSSE**

Drawing No.

Index No.

JAJ5504/03/97 08:47AM M:\0008PR\LKPB\LKBSSEC.DWG

FED. ROAD DIV. NO.	STATE	PROJECT NO.	FISCAL YEAR	SHEET NO.
3	FLA.		98	B-42

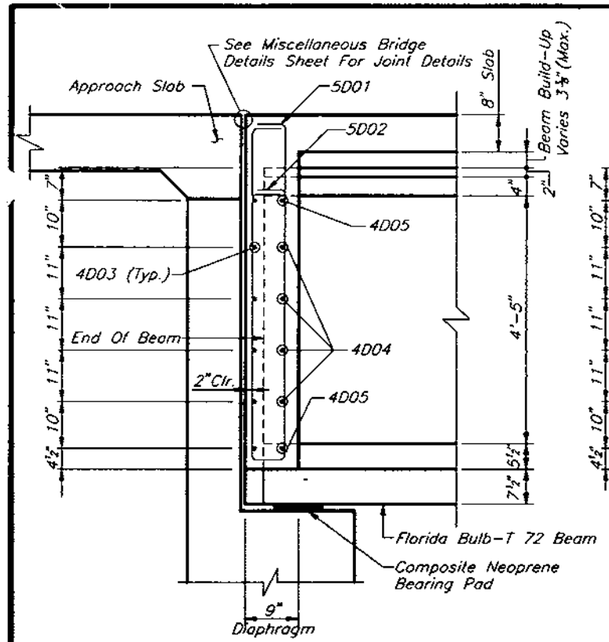

DIAPHRAGM SECTION AT END BENTS
(Concrete Beam Spans Only)

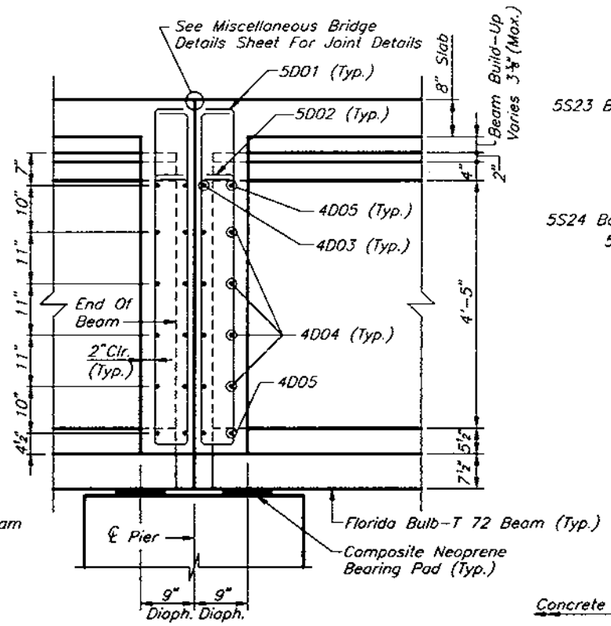

DIAPHRAGM SECTION AT PIERS
(Concrete Beam Spans Only)

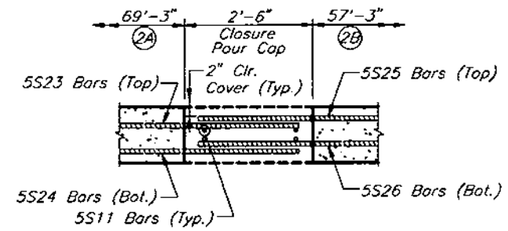

CLOSURE POUR CAP DETAIL
POUR (2C)
(SEE NOTE 8)

NOTES

1. The Build-Up Dimensions Are Computed Assuming A Time To Release Of 24 Hours.
2. The Length Correction Dimension And The Build-Up Dimensions Assume A Period Of No More Than 120 Days Between The Casting Of The Beam And The Casting Of The Deck. These Values Are Also Calculated Assuming Transfer Of Prestress At The Indicated Release Concrete Strength (f'ci). Contractor Shall Submit Calculations Revising These Values To The Engineer For Approval Should The Contractor's Proposed Schedule Between Casting Of The Beam And Casting Of The Deck Adversely Affect These Time Dependent Values.
3. Dead Load Deflection During Pour Is The Anticipated Deflection Of Beam Due To Casting Of The Concrete Deck. Build-Up At Ends And Build-up At Midspan (See Detail This Sheet) Refer To The Build-Up At The Ends And Midspan Of The Beam Necessary To Achieve True Grade At The Top Of The Deck After Casting Of The Deck.
4. Slab Shall Be Screeded To Grade With No Allowance For Permanent Camber.
5. The Cost Of All Labor And Materials Required For Construction Of Deck Joint Shall Be Paid For In Bid Item No. 400-2-4 Class II Concrete (Superstructure).
6. The Contractor Shall Take Extra Care Of The Top Flange During Transportation And Installation Of The 72" Florida Bulb - T Beams.
7. Deck Pour Sequence Notes:
   a. No Unit Shall Be Placed Adjacent To A Previously Placed Unit That Is Not A Minimum Of 72 Hours Old.
   b. After Placement Of The First Unit, Succeeding Placements Shall Begin At The End Away From And Proceed Toward The Previously Placed Unit.
   c. Demonstration And Trial Batches Will Be In Accordance With Specification 346-6-2, Specifically Hot Weather Mixes, In Addition To All Other Requirements.
   d. A Trial Batch Using Concrete Setting Retardation With A Delayed Time Of Setting Of Approximately 10 Hours Will Be Required.
   e. A Demonstration Batch Will Be Required, With A Minimum Of Three Cubic Yards Held And Agitated In The Mixer. The Concrete Will Then Be Discharged Into Receptacles Until Initial Set.
   f. The Initial Set Will Be Determined By Florida Method FM1-T197.
   g. The Add Mixer Dosage Rate For Retardation Will Be As Specified By The Manufacturer.
   h. The Contractor Is To Provide A Dosage Chart For The Proposed Mix Design For Approval. The Dosage Rate Chart Must Indicate As A Minimum The Quantity Of Add Mixture And Expected Time Of Retardation In Quarter-Hour Increments.
8. For Span 3, Adjustment To Superstructure Deflection (By Loading Adjacent Span) May Be Required To Provide The Necessary Concrete Cover (2" Clr. To Reinforcement) At The Closure Pour Cap. Steel Intermediate Cross Frames Located Under The Closure Pour Cap Shall Not Be Installed Until The Differential Deflections Between The Right Deck And Left Deck Have Been Equalized.

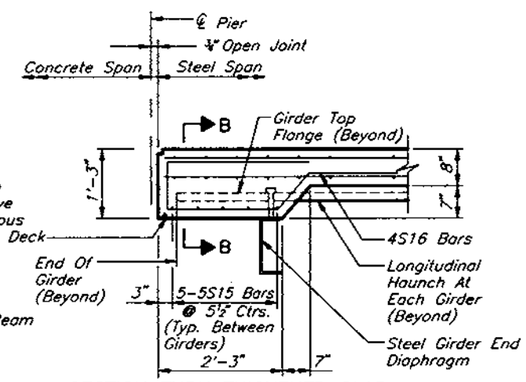

SECTION THRU THICKENED SLAB AT ENDS OF STEEL GIRDERS (SPAN 3)

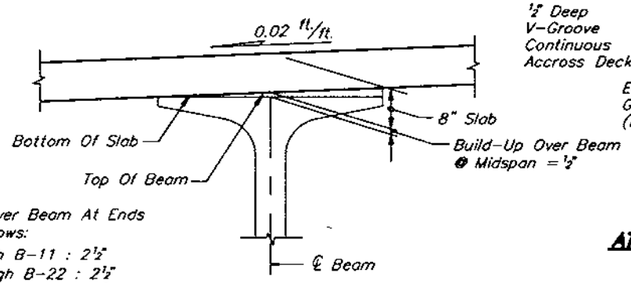

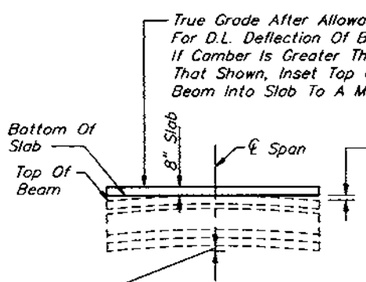

Build-Up Over Beam At Ends Are As Follows:
B-1 Through B-11 : 2½"
B-12 Through B-22 : 2½"
B-34 Through B-44 : 3⅜"
B-45 Through B-55 : 3⅜"
B-56 Through B-66 : 3⅜"

B-1 Through B-11 : 2 11/16"
B-12 Through B-22 : 2 11/16"
B-34 Through B-44 : 3 15/16"
B-45 Through B-55 : 3 15/16"
B-56 Through B-66 : 3 15/16"

BUILD-UP OVER FLORIDA BULB-T BEAM

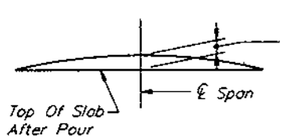

Dead Load Deflection During Pour Measured At Longitudinal ℄ Beam:
B-1 Through B-11 : 11/16"
B-12 Through B-22 : 11/16"
B-34 Through B-44 : 1"
B-45 Through B-55 : 1"
B-56 Through B-66 : 1"

DEFLECTION DIAGRAM FOR FLORIDA BULB-T

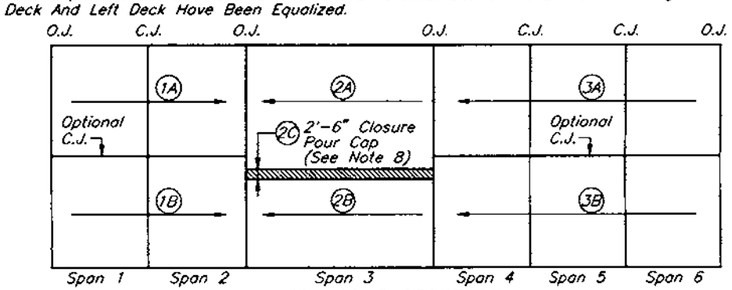

DECK POUR SEQUENCE
O.J. : Open Joint
C.J. : Construction Joint

ESTIMATED SUPERSTRUCTURE QUANTITIES

ITEM		UNIT	TOTALS
Class II Concrete (Super-Structure)	Deck	C.Y.	2,229.6
	Pedestrian Parapet	C.Y.	69.1
	Median	C.Y.	241.4
	Diaphragm	C.Y.	166.0
	B/U	C.Y.	107.3
	Total	C.Y.	2,813.4
Reinforcing Steel (Superstructure)		LB.	786,857
Prestressed Concrete Beams (72-FBT)		L.F.	5351

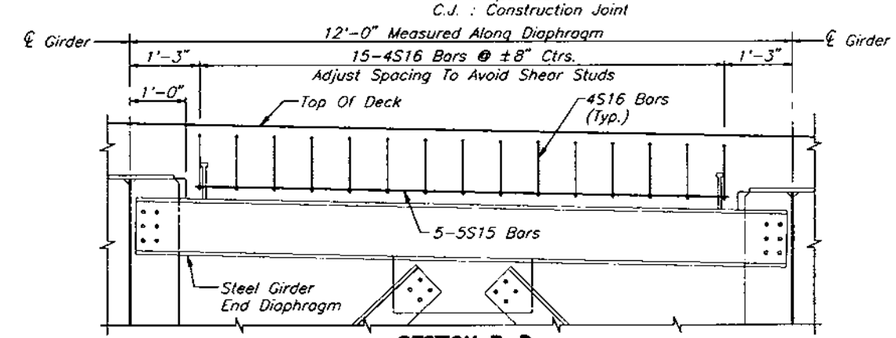

SECTION B-B
(Not All Deck Reinf. Shown)

REVISIONS						
Date	By	Description	Date	By	Description	

	Names	Dates
Drawn by	JLA/JJS	3/96
Checked by	MKA	3/96
Designed by	MKA	3/96
Checked by	PM	3/96
Approved by	Peeter Mannik, P.E.	

ENGINEER OF RECORD:
DYER, RIDDLE, MILLS AND PRECOURT, INC.
1505 EAST COLONIAL DRIVE
ORLANDO, FLORIDA 32803

LOGO: DRMP

SEAL: Peeter Mannik 3/4/96

FLORIDA DEPARTMENT OF TRANSPORTATION
STRUCTURES DESIGN OFFICE

ROAD NO.	COUNTY	PROJECT NO.
SR414	SEMINOLE	77002-3503

SHEET TITLE: SUPERSTRUCTURE DETAILS

PROJECT NAME: MAITLAND BOULEVARD OVER LAKE BOSSE

Drawing No.

Index No.

JA/SG4/03/97 10:12AM 200BPR\LKBR\LKBSSDT.DWG

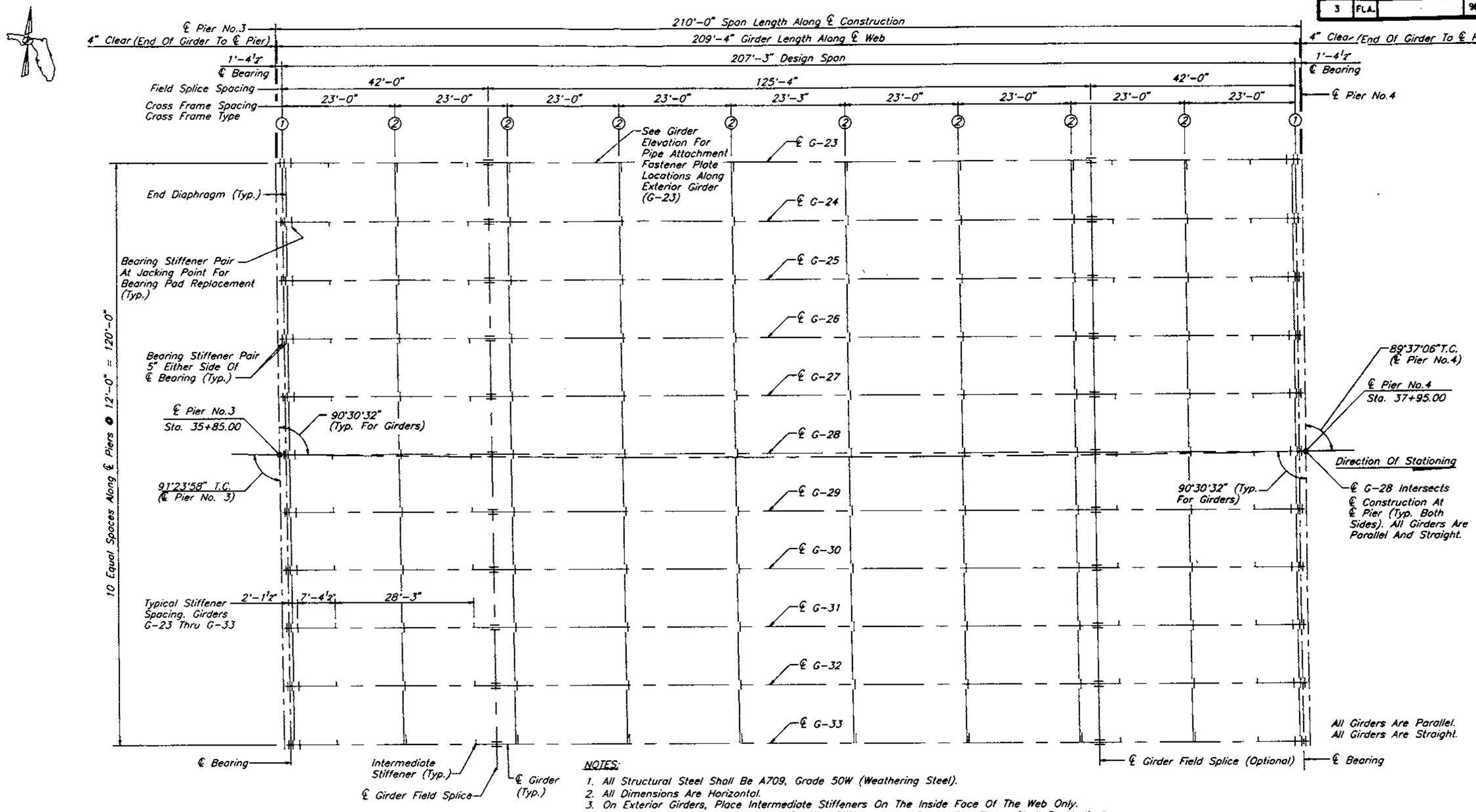

NOTES:

1. All Structural Steel Shall Be A709, Grade 50W (Weathering Steel).
2. All Dimensions Are Horizontal.
3. On Exterior Girders, Place Intermediate Stiffeners On The Inside Face Of The Web Only.
4. Ends Of Girders, Stiffener Plates, Bearing Stiffeners And Connection Plates Shall Be Vertical Upon Completion Of Construction.
5. All Cross Frames Shall Be Parallel To The ℄ Piers.
6. For Steel Girder Details, See Sheets B-44 Thru B-47.
7. For Additional Steel Girder Notes, See Sheet A-2.
8. For Field Splice Details, See Sheet B-46.
9. All Welding Design, Fabrication & Inspection Shall Be In Accordance With The Current AASHTO/AWS Bridge Welding Code.
10. Charpy V-Notch Impact Test Are Required For All Web Plates And Bottom Flange Plates Of The Girders (Including Field Splice Plates).

REVISIONS

Date	By	Description	Date	By	Description

	Names	Dates
Drawn by	JLA/JJS	3/96
Checked by	MN	3/96
Designed by	MN	3/96
Checked by	PM	3/96
Approved by	Peeter Mannik, P.E.	

ENGINEER OF RECORD:
DYER, RIDDLE, MILLS AND PRECOURT, INC.
1906 EAST COLONIAL DRIVE
ORLANDO, FLORIDA 32803

LOGO: DRMP

SEAL: 3/4/98

FLORIDA DEPARTMENT OF TRANSPORTATION
STRUCTURES DESIGN OFFICE

ROAD NO.	COUNTY	PROJECT NO.
SR414	SEMINOLE	77002-3503

SHEET TITLE: FRAMING PLAN - SPAN 3

PROJECT NAME: MAITLAND BOULEVARD OVER LAKE BOSSE

Drawing No.

Index No.

JA/JS 07/07/97 4:28PM M:\DOGBFR\LKB\LKBFRM.DWG

FED. ROAD DIV. NO.	STATE	PROJECT NO.	FISCAL YEAR	SHEET NO.
3	FLA.		98	B-44

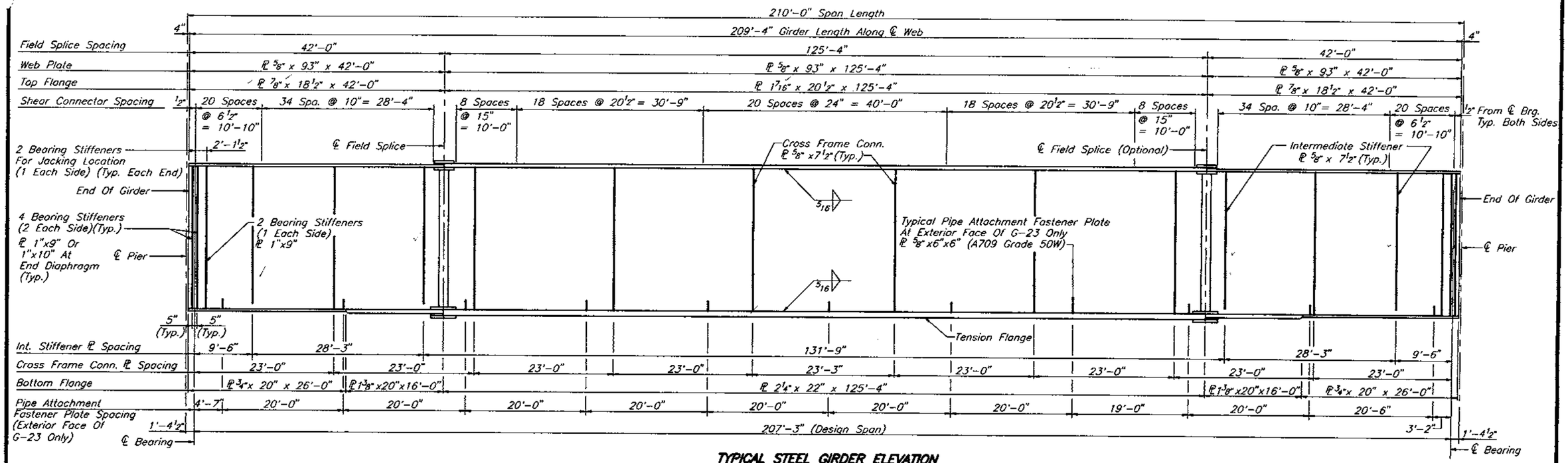

TYPICAL STEEL GIRDER ELEVATION

GIRDER NO. 23 THROUGH 33

Notes: 1. All Intermediate Stiffener Plates Are One Sided. All Cross Frame Connection Plates Are Two Sided Except At Exterior Beams. See The "FRAMING PLAN" For Locations.

2. See The Bearing Details Sheet For Details Of The Bearing Plates To Be Welded To The Bottom Flange.

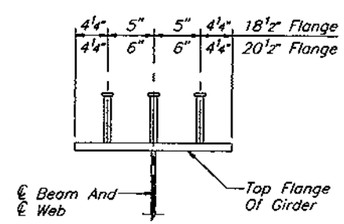

SECTION THRU GIRDER

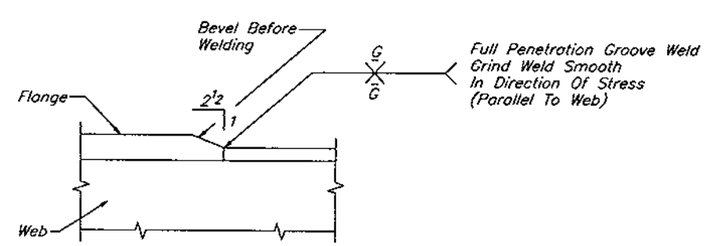

FLANGE THICKNESS TRANSITION

(Typ.- Except At Field Splice Locations)

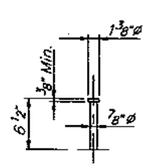

Typical Welded Stud (3 Per Row)

SHEAR CONNECTOR DETAILS

REVISIONS

Date	By	Description	Date	By	Description

	Names	Dates
Drawn by	JLA/JJS	3/96
Checked by	MN	3/96
Designed by	MN	3/96
Checked by	PM	3/96
Approved by	Peeter Mannik, P.E.	

ENGINEER OF RECORD:
DYER, RIDDLE, MILLS AND PRECOURT, INC.
1506 EAST COLONIAL DRIVE
ORLANDO, FLORIDA 32803

LOGO: DRMP DYER, RIDDLE, MILLS & PRECOURT, INC. ENGINEERS · SURVEYORS

SEAL: Peeter Mannik 3/4/98

FLORIDA DEPARTMENT OF TRANSPORTATION
STRUCTURES DESIGN OFFICE

ROAD NO.	COUNTY	PROJECT NO.
SR414	SEMINOLE	77002-3503

SHEET TITLE: GIRDER ELEVATION

PROJECT NAME: MAITLAND BOULEVARD OVER LAKE BOSSE

Drawing No.

Index No.

JA/JSC2/07/97 4:29PM

200BR\LKB\LKBGREL.DWG

FED. ROAD DIV. NO.	STATE	PROJECT NO.	FISCAL YEAR	SHEET NO.
3	FLA.		98	B-45

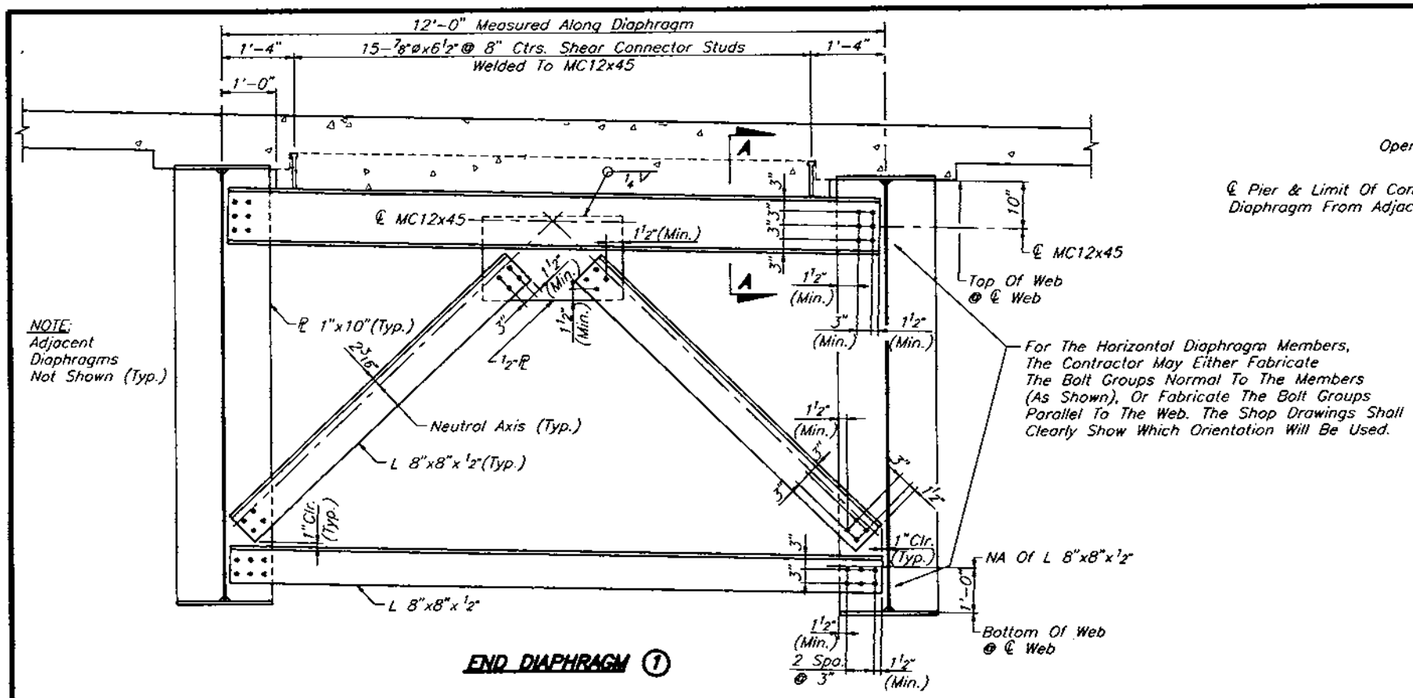

END DIAPHRAGM ①

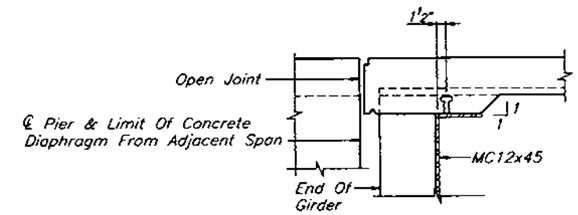

SECTION A-A

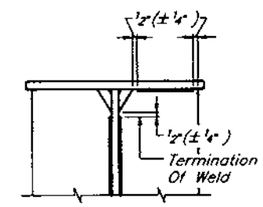

STIFFENER WELD TERMINATION DETAIL

If Stiffener Plate Extends Beyond Flange Edge, The Weld Shall Be Terminated 1/2"(± 1/4") From Edge.

DIAPHRAGM AND CROSS FRAME NOTES:

1. Bolt Holes In Diaphragm And Cross Bracing Members Shall Be Oversized Holes (3/16" Larger Than The Bolt Diameter). Bolt Holes In The Connecting Stiffeners Shall Be Standard Holes.
2. All Bolts Shall Be 7/8" ø H.S. Bolts (Friction Type) Conforming To ASTM A325 (Type 3). Minimum Edge Distance 1 1/2", Minimum Spacing 3".
3. Diapragms And Cross Bracing Located In The Beam Space Under The Closure Pour Cap (G-28 & G-29) Shall Not Be Installed Until The Differential Deflection Between Adjacent Decks Is Equalized, But Must Be Installed And Secured Prior To Pouring The Closure Pour Cap.

ESTIMATED QUANTITIES

ITEM	UNIT	QUANTITY
Structural Steel (Weathering)	lb	1132741

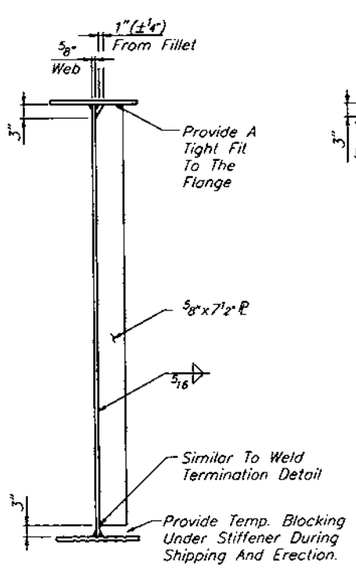

TRANSVERSE STIFFENER

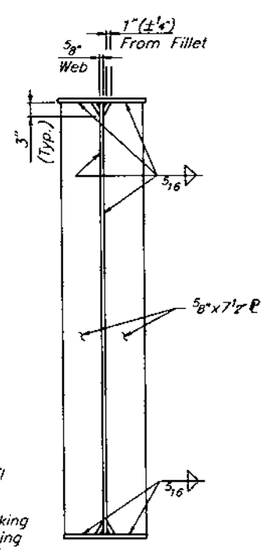

CROSS FRAME CONNECTION

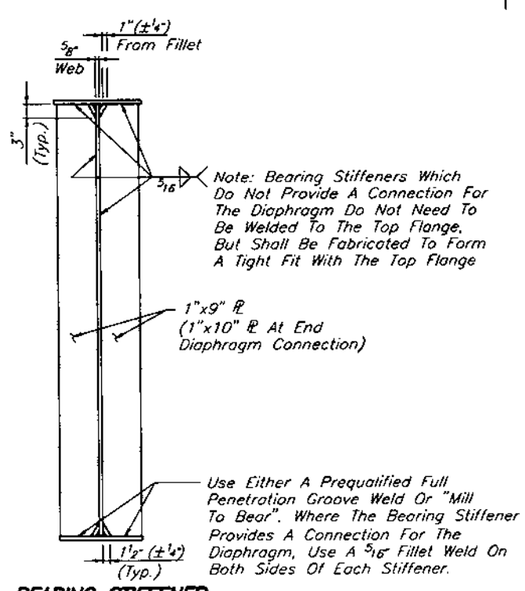

BEARING STIFFENER

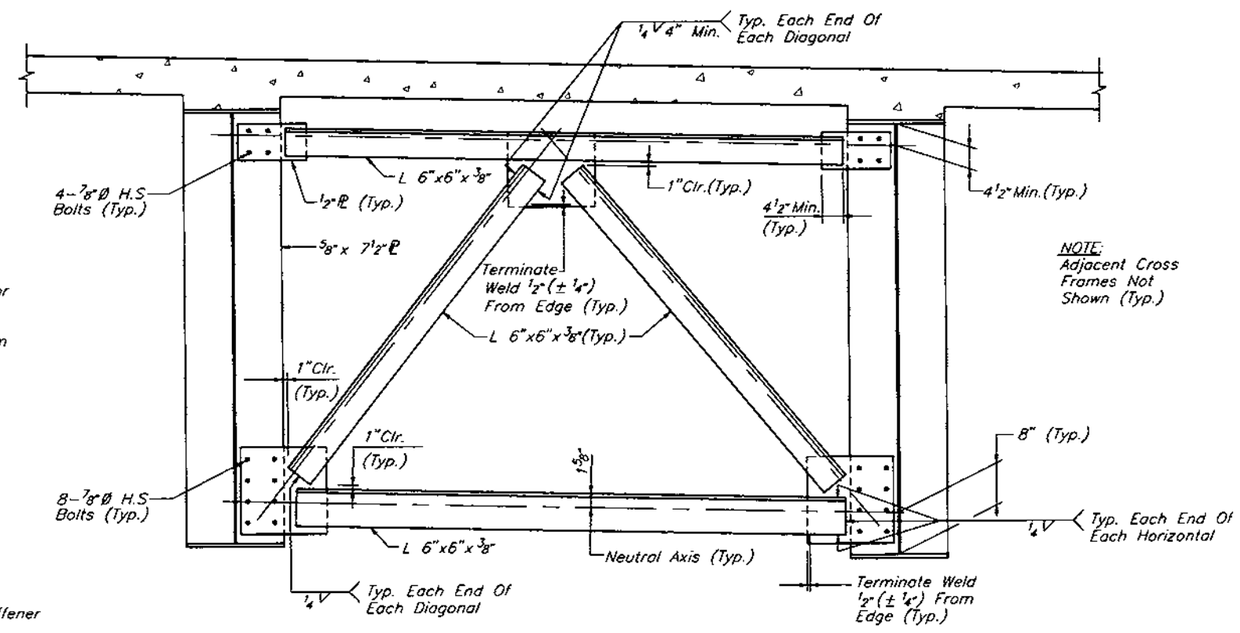

INTERMEDIATE CROSS FRAME

REVISIONS					
Date	By	Description	Date	By	Description

	Names	Dates
Drawn by	JLA/JJS	3/96
Checked by	MN	3/96
Designed by	MN	3/96
Checked by	PM	3/96
Approved by	Peeter Mannik, P.E.	

ENGINEER OF RECORD:
DYER, RIDDLE, MILLS AND PRECOURT, INC.
1508 EAST COLONIAL DRIVE
ORLANDO, FLORIDA 32803

LOGO: DRMP DYER, RIDDLE, MILLS & PRECOURT, INC. ENGINEERS · SURVEYORS

SEAL: Peter Mannik 3/4/98

FLORIDA DEPARTMENT OF TRANSPORTATION
STRUCTURES DESIGN OFFICE

ROAD NO.	COUNTY	PROJECT NO.
SR414	SEMINOLE	77002-3503

SHEET TITLE: **GIRDER DETAILS**

PROJECT NAME: **MAITLAND BOULEVARD OVER LAKE BOSSE**

Drawing No. **1 OF 2**

Index No.

A:/2004/03/97 10:45AM M:\DDBP\LKB\LKBGRDT.DWG

FED. ROAD DIV. NO.	STATE	PROJECT NO.	FISCAL YEAR	SHEET NO.
3	FLA.		98	B-46

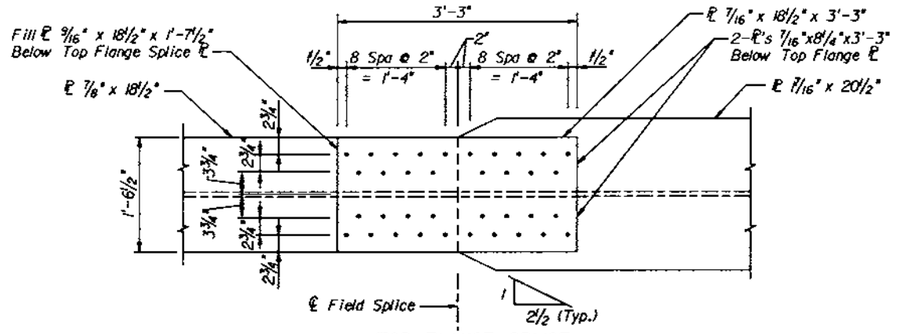

TOP FLANGE SPLICE

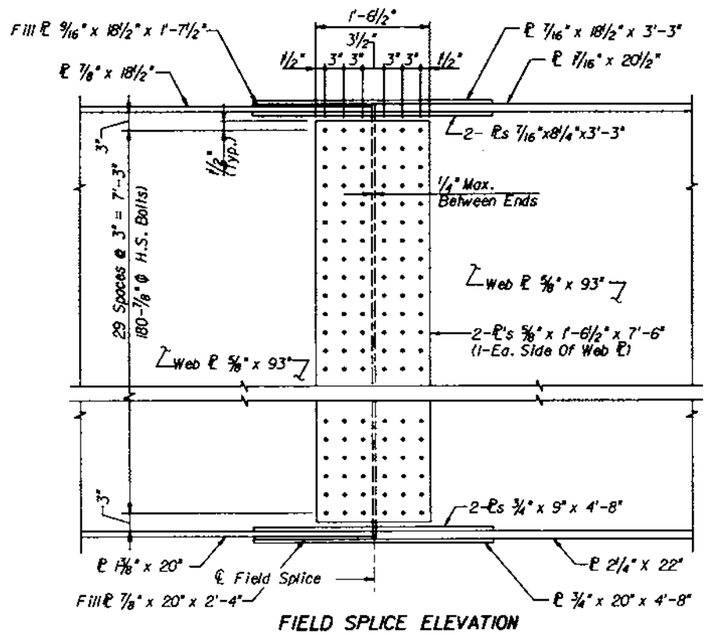

FIELD SPLICE ELEVATION

FIELD SPLICE NOTES:

1. All Splice Plates Shall Be In Accordance With A.S.T.M. Specification A-709 Steel (Grade 50W), Including Fill Plates.
2. Charpy V-Notch Impact Properties Required For Web And Bottom Flange Splice Plates. Impact Properties Shall Be In Accordance With Temperture Zone Designation 1.
3. All Parts Of Each Splice Shall Be Completely Shop Assembled Taking Into Account Their Relative Position In The Finished Structure Due To Grade, Camber, And Curvature Including Their Location Relative To The Shear Connectors. Sections Shall Be Matchmarked While So Assembled. General Reaming Of Holes For Each Field Splice Will Be Required While All Parts Are Completely Shop Assembled In The Correct Position.
4. All Bolts Shall Be 7/8" Ø High Strength Bolts (Friction Type). High Strength Bolts Shall Conform To The Requirements Of The ASTM A-325, Type 3. Girder Field Splices Shall Be Bolted Friction Type Connections Using Standard Size Holes (1/16" Larger Than Bolt Diameter). Bolts And Washers Shall Be Sized Such That The Threads Are Excluded From The Shear Planes A Distance Equal To Two Pitch Increments.
5. Bolt Heads Shall Be Placed On The Exposed Side Of Exterior Girder Webs, And On The Bottom Side Of Bottom Flanges.

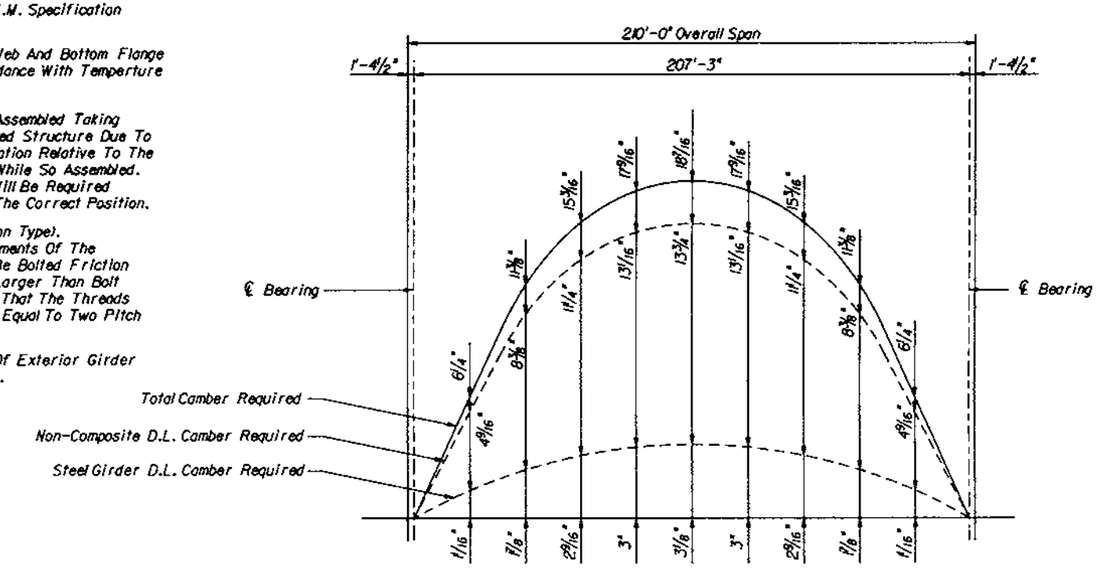

CAMBER DIAGRAM
(SHOWING CUMULATIVE DIMENSIONS)

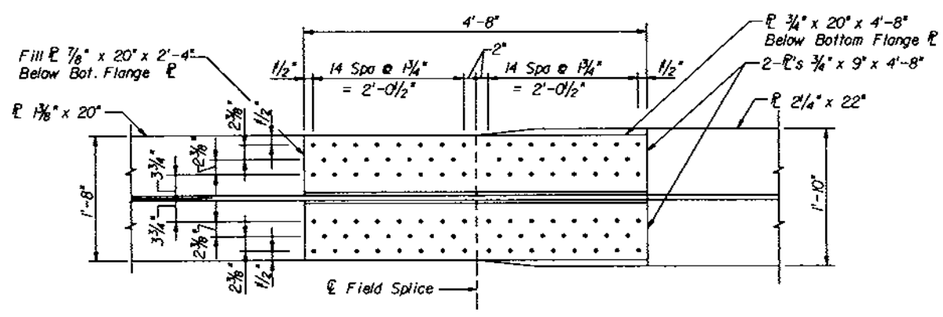

BOTTOM FLANGE SPLICE

CAMBER NOTES

1. Steel Girder Dead Load Camber Includes Deflections Due To Girder Self Weight Only.
2. Non-Composite Dead Load Camber Includes Dead Load Of Steel Girder And Concrete Deck Pour.
3. Total Camber Includes Deflections Due To Steel Girder Dead Load, Total Concrete Dead Load Including Composite Dead Load And Profile Vertical Curve Of Deck.
4. Ordinates Computed Along ℄ Girders At Each 10 Equal Spaces Between ℄ Bearings.
5. Girders Shall Be Fabricated To Provide For The Total Dead Load Deflection And The Vertical Curve (Total Camber Required).

REVISIONS

Date	By	Description	Date	By	Description

	Names	Dates
Drawn by	JJS	4/95
Checked by	MN	4/95
Designed by	MN	4/95
Checked by	PM	4/95
Approved by	Peeter Mannik, P.E.	

ENGINEER OF RECORD: DYER, RIDDLE, MILLS AND PRECOURT, INC.
1005 EAST COLONIAL DRIVE ORLANDO, FLORIDA 32803

LOGO: DRMP DYER, RIDDLE, MILLS & PRECOURT, INC. ENGINEERS - SURVEYORS

SEAL: Peter Mannik 3/4/98

FLORIDA DEPARTMENT OF TRANSPORTATION
STRUCTURES DESIGN OFFICE

ROAD NO.	COUNTY	PROJECT NO.
SR414	SEMINOLE	77002-3503

SHEET TITLE: GIRDER DETAILS

PROJECT NAME: MAITLAND BOULEVARD OVER LAKE BOSSE

Drawing No. 2 of 2

Index No.

LKBSTOT.DGN

FED. ROAD DIV. NO.	STATE	PROJECT NO.	FISCAL YEAR	SHEET NO.
3	FLA.		98	B-47

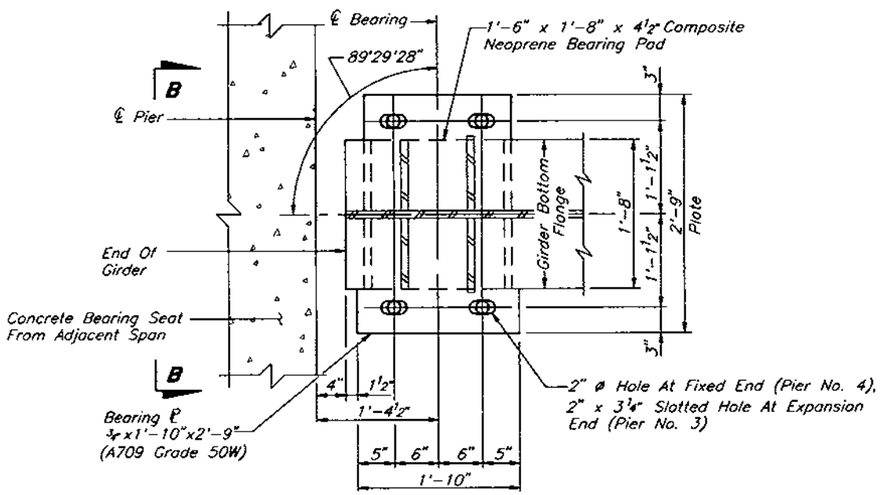

SECTION A-A

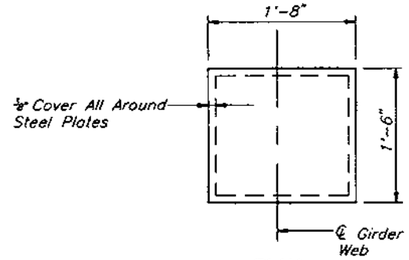

PLAN

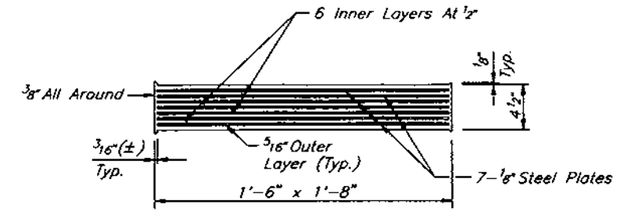

TYPICAL SECTION

NON - STANDARD COMPOSITE PAD

No. Req'd - 22 Units Total

COMPOSITE PAD NOTES

1. All Neoprene In Bearing Pads Shall Have A Grade 50 Durometer Hardness.
2. Steel Plates In Composite Bearing Pads Shall Conform To ASTM A36 Or ASTM A570 Grade 36.
3. Variations In Pad Dimensions Will Be Allowed. Revised Pads Shall Meet The Current Specifications And Shall Be Approved By The Engineer.
4. Payment For Steel Bearing Plate Assemblies Including Anchors Shall Be Included In The Contract Unit Price For Structural Steel.
5. Composite Neoprene Pads Shall Meet All Requirements Of The F.D.O.T. Specifications, Section 932-2.
6. The Contractor Shall Furnish All Neoprene Pads, And Shall Submit Shop Drawings For Approval Prior To Fabrication.

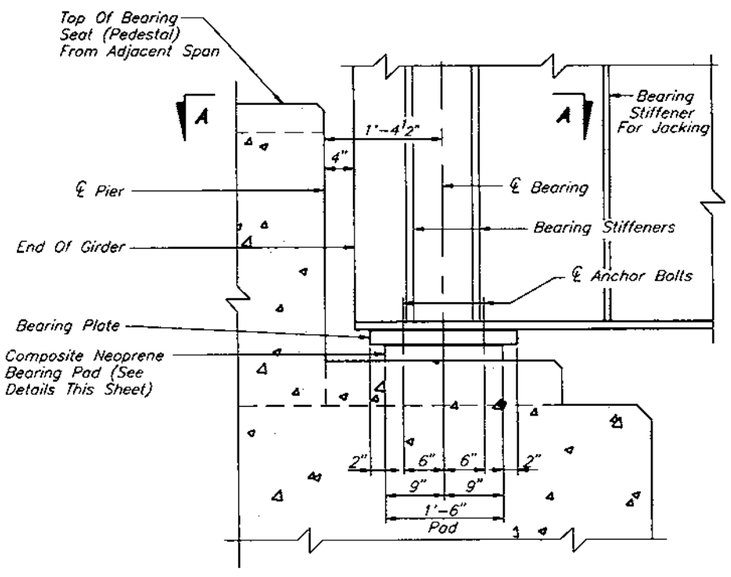

PART SECTION THRU GIRDER END

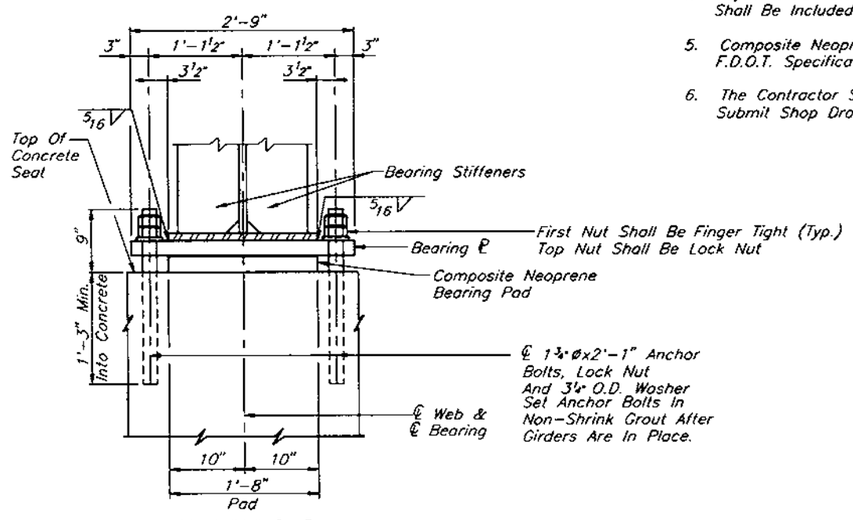

SECTION B-B

BEARING DETAILS

REVISIONS					
Date	By	Description	Date	By	Description

	Names	Dates
Drawn by	JLA/JJS	3/96
Checked by	MN	3/96
Designed by	MN	3/96
Checked by	PM	3/96
Approved by	Peeter Monnik, P.E.	

ENGINEER OF RECORD: DYER, RIDDLE, MILLS AND PRECOURT, INC. 1905 EAST COLONIAL DRIVE ORLANDO, FLORIDA 32803

LOGO: DRMP DYER, RIDDLE, MILLS & PRECOURT, INC. ENGINEERS · SURVEYORS

SEAL: 3/4/98

FLORIDA DEPARTMENT OF TRANSPORTATION
STRUCTURES DESIGN OFFICE

ROAD NO.	COUNTY	PROJECT NO.
SR414	SEMINOLE	77002-3503

SHEET TITLE: BEARING DETAILS - SPAN 3

PROJECT NAME: MAITLAND BOULEVARD OVER LAKE BOSSE

Drawing No.

Index No.

JA/-S64/03/9/ 10:49AM M:\000BRK\LK8\STEELDTB.DWG

FED. ROAD DIV. NO.	STATE	PROJECT NO.	FISCAL YEAR	SHEET NO.
3	FLA.		98	B-48

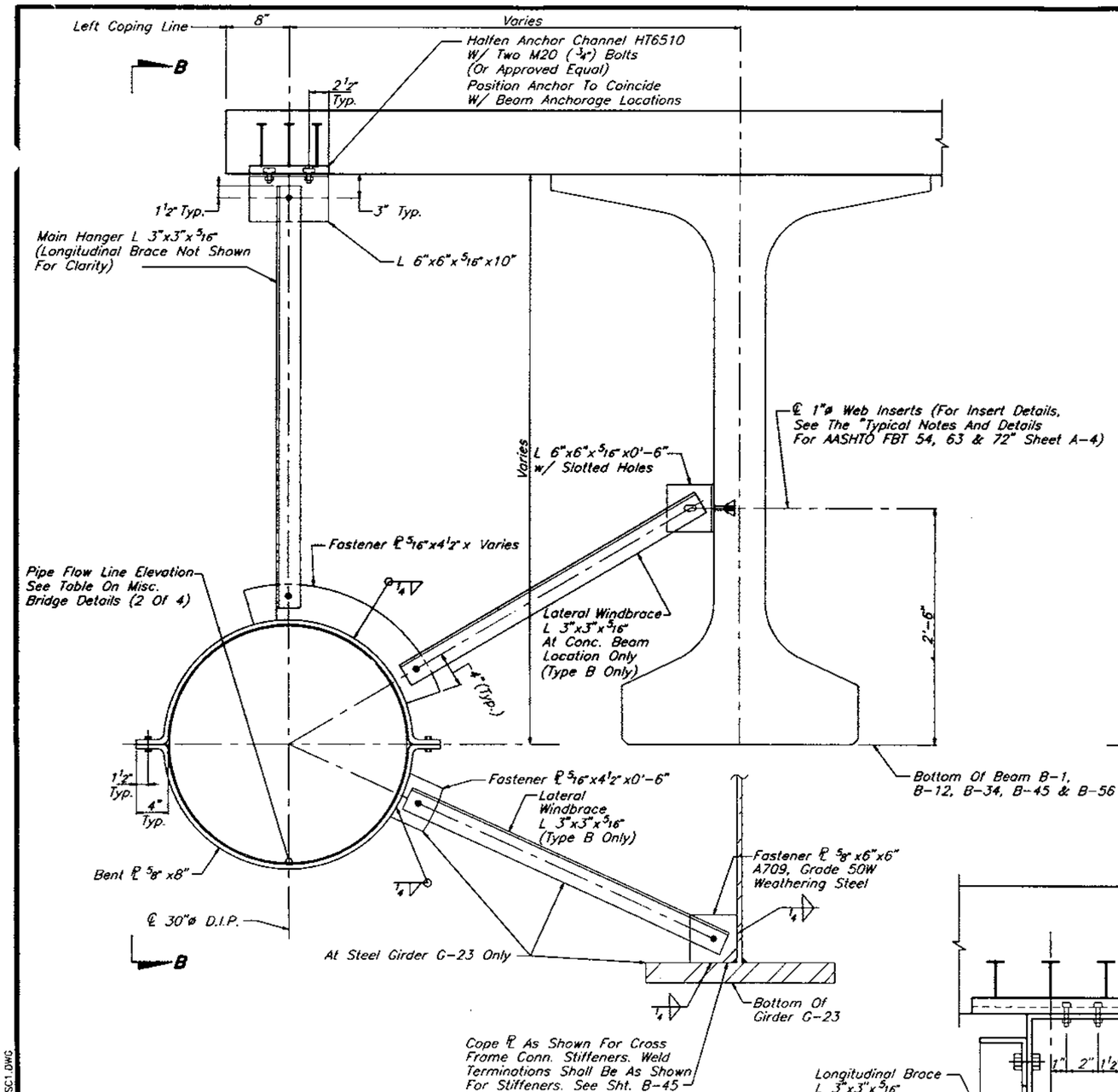

PIPE HANGER DETAIL

BRACED HANGER SHOWN
(SEE NOTE 1)

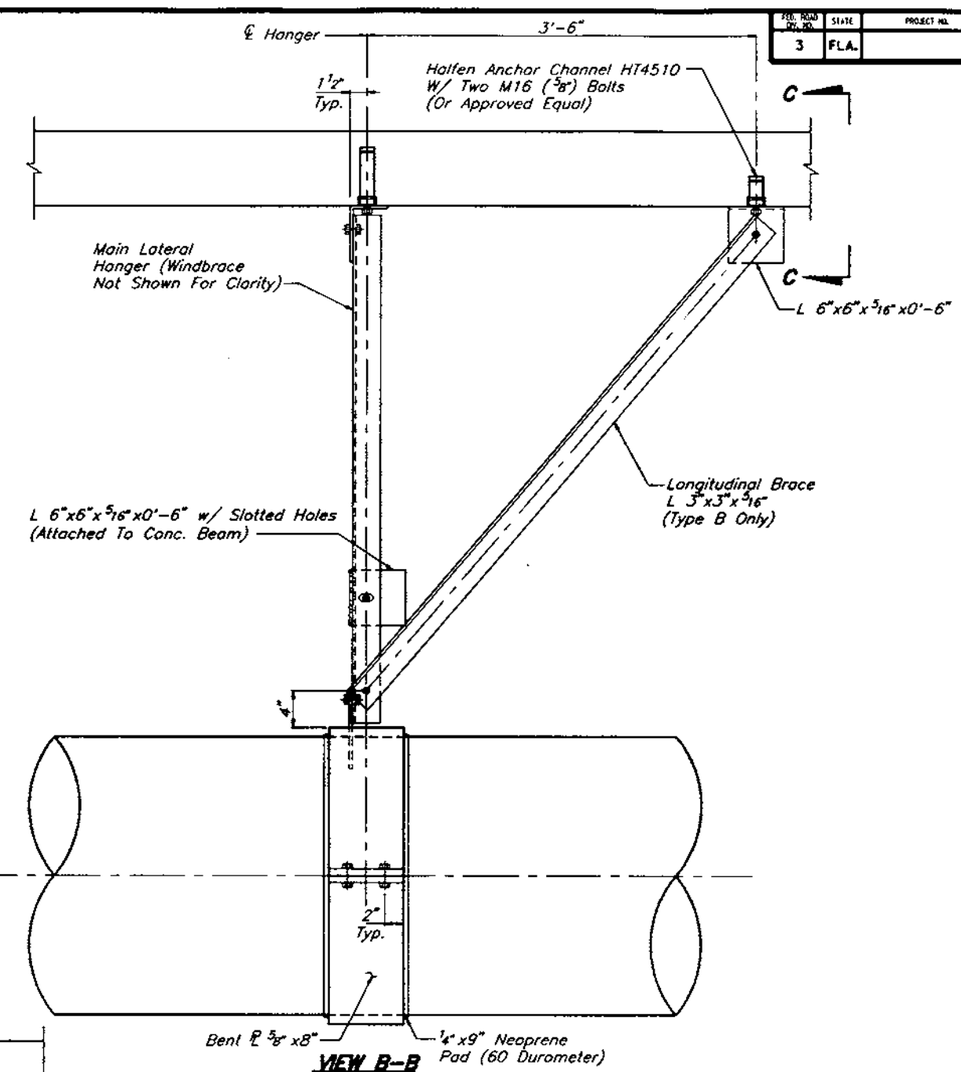

VIEW B-B

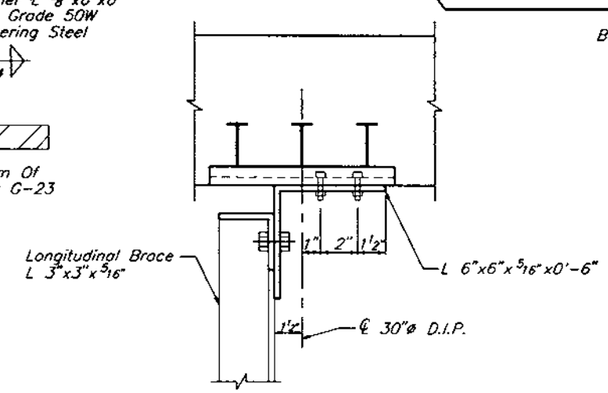

VIEW C-C

NOTES:

1. Hanger Types:
   Type A – Includes Main Hanger Only
   Type B – Includes Main Hanger, Lateral Wind Brace & Longitudinal Brace.
   For Hanger Type Location See Pipe Hanger Location Table, Miscellaneous Bridge Details, (Sht. B-50).
2. All Supports And Attachment Hardware Shall Be ASTM A709 Grade 36 Steel And Hot Dipped Galvanized After Fabrication. Paint Pipe And Hangers, See General Note Sheet, Sht. A-2. Color To Be Selected By Engineer.
3. All Bolts And Nuts Are 7/8"ø And Shall Be In Accordance With ASTM F 593 & F 594, Group 1, Type 304 Stainless Steel (Unless Noted Otherwise).
4. The Contractor Shall Furnish Complete Shop Drawings For Pipe Attachment Assembly.
5. Payment: The Cost Of The Pipe Hanger Assembly Shall Be Paid For Under Pay Item 1622-11-33 Bridge Hanger Anchor And Is Included In The CES Summary Of Bridge Pay Items. The Cost Of The Pipe Hanger Assembly Shall Include Anchorage, Neoprene Pads And Misc. Steel. The Cost Of The Ductile Iron Pipe Shall Be Paid For Under Pay Item 430-171-33 And Is Included In The CES Summary Of Bridge Pay Items.
6. The Pipe Shall Be Ductile Iron Pipe (D.I.P.). Pipe Shall Be In Accordance With The Technical Special Provisions.

REVISIONS					
Date	By	Description	Date	By	Description

	Names	Dates
Drawn by	JLA/JJS	3/96
Checked by	MKA	3/96
Designed by	MKA	3/96
Checked by	PM	3/96
Approved by	Peeter Mannik, P.E.	

ENGINEER OF RECORD:
DYER, RIDDLE, MILLS AND PRECOURT, INC.
1605 EAST COLONIAL DRIVE
ORLANDO, FLORIDA 32803

LOGO: DRMP STEIN, RIDDLE, MILLS & PRECOURT, INC. ENGINEERS · SURVEYORS

SEAL: Peeter Mannik 3/4/98

FLORIDA DEPARTMENT OF TRANSPORTATION
STRUCTURES DESIGN OFFICE

ROAD NO.	COUNTY	PROJECT NO.
SR414	SEMINOLE	77002-3503

SHEET TITLE: MISCELLANEOUS BRIDGE DETAILS

PROJECT NAME: MAITLAND BOULEVARD OVER LAKE BOSSE

Drawing No. 1 OF 5

Index No.

JA/JS 03/02/98 08:31AM 700BRLUKB\LKBMISC1.DWG

FED. ROAD DIV. NO.	STATE	PROJECT NO.	FISCAL YEAR	SHEET NO.
3	FLA.		98	B-49

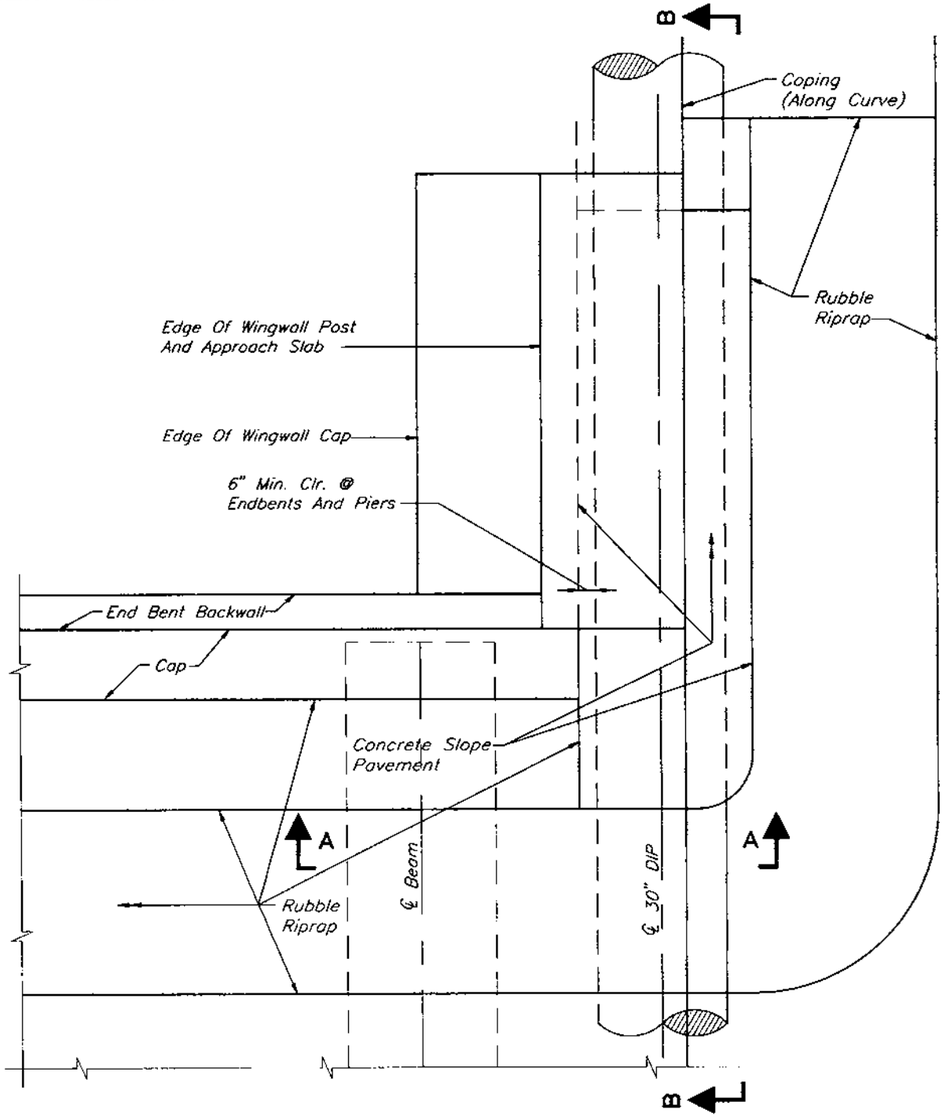

PLAN

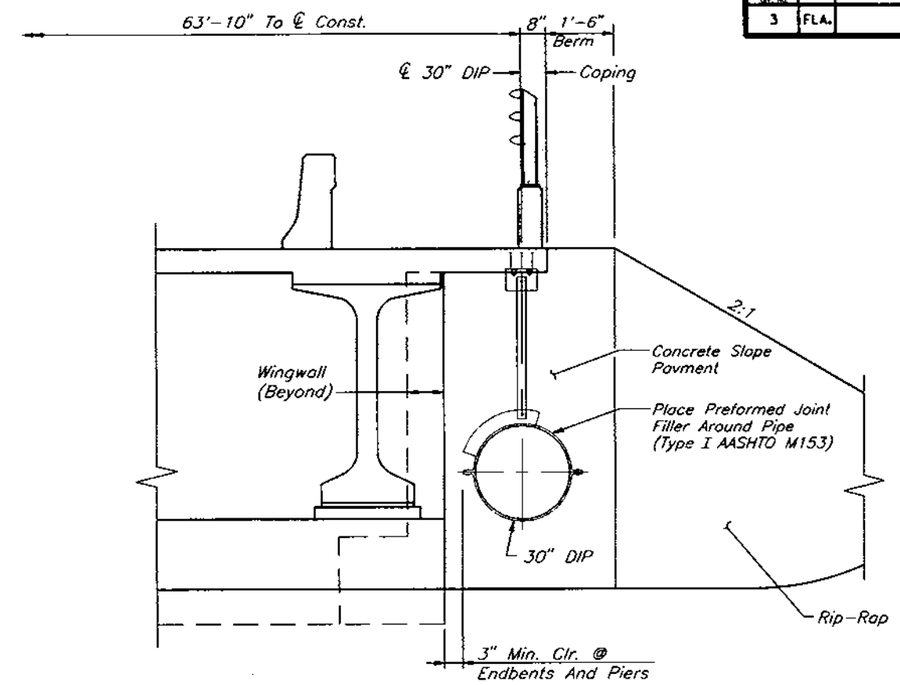

SECTION A-A

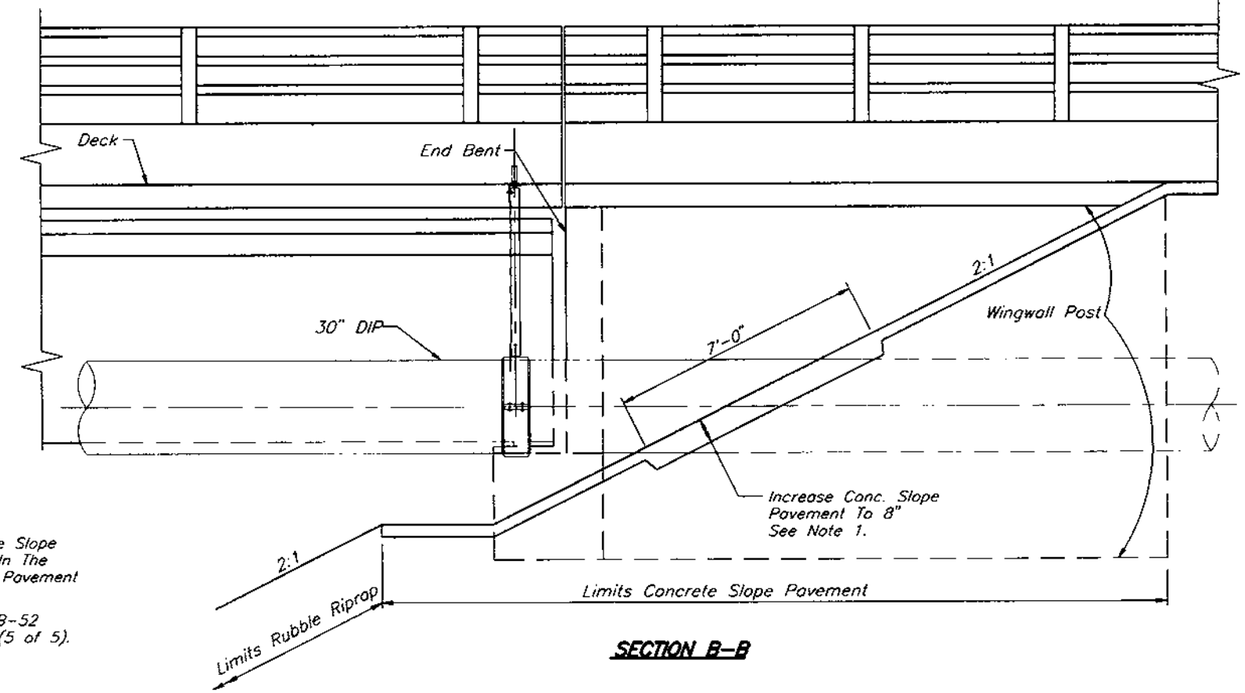

SECTION B-B

NOTE:

1. Payment For The 8" Concrete Slope Pavement Shall Be Included In The Cost Of The 4" Conc. Slope Pavement Pay Item No. 524-2-2.
2. Work This Sheet With Sheet B-52 Miscellaneous Bridge Details (5 of 5).

REVISIONS					
Date	By	Description	Date	By	Description

	Names	Dates
Drawn by	JLA/JJS	3/96
Checked by	MKA	3/96
Designed by	MKA	3/96
Checked by	PM	3/96
Approved by	Peeter Mannik, P.E.	

ENGINEER OF RECORD:
DYER, RIDDLE, MILLS AND PRECOURT, INC.
1505 EAST COLONIAL DRIVE
ORLANDO, FLORIDA 32803

LOGO: DRMP DYER, RIDDLE, MILLS & PRECOURT, INC. ENGINEERS · SURVEYORS

SEAL: Peeter Mannik 3/4/98

FLORIDA DEPARTMENT OF TRANSPORTATION
STRUCTURES DESIGN OFFICE

ROAD NO.	COUNTY	PROJECT NO.
SR414	SEMINOLE	77002-3503

SHEET TITLE: **MISCELLANEOUS BRIDGE DETAILS**

PROJECT NAME: **MAITLAND BOULEVARD OVER LAKE BOSSE**

Drawing No. **2 OF 5**

Index No.

N:\502\11\97 11:07AM M:\0008PR\LKB\FLOBOSSE.DWG

PIPE HANGER LOCATION			PIPE FLOW LINE ELEVATION
Station	Offset	Type	
33+97.67	63.83	A	69.22
34+07.76	63.83	B	69.19
34+17.86	63.83	A	69.16
34+27.96	63.83	B	69.13
34+38.05	63.83	A	69.11
34+48.15	63.83	B	69.08
34+58.24	63.83	A	69.05
34+68.34	63.83	B	69.02
34+78.43	63.83	A	68.99
34+88.53	63.83	B	68.97
34+98.62	63.83	A	68.94
35+08.72	63.83	B	68.91
35+18.81	63.83	A	68.88
35+28.91	63.83	B	68.86
35+39.00	63.83	A	68.83
35+49.10	63.83	B	68.80
35+59.20	63.83	A	68.77
35+69.29	63.83	B	68.75
35+79.39	63.83	A	68.72
35+89.48	63.83	B	68.69
35+99.58	63.83	A	68.66
36+09.67	63.83	B	68.63
36+19.77	63.83	A	68.61
36+29.86	63.83	B	68.58
36+39.96	63.83	A	68.55
36+50.05	63.83	B	68.52
36+60.15	63.83	A	68.50
36+70.25	63.83	B	68.47
36+80.34	63.83	A	68.44
36+90.44	63.83	B	68.41
37+00.53	63.83	A	68.39
37+10.63	63.83	B	68.36
37+20.72	63.83	A	68.33
37+30.82	63.83	B	68.30
37+40.91	63.83	A	68.27
37+50.01	63.83	B	68.25

PIPE HANGER LOCATION			PIPE FLOW LINE ELEVATION
Station	Offset	Type	
37+60.10	63.83	A	68.22
37+70.20	63.83	B	68.19
37+80.79	63.83	A	68.16
37+90.89	63.83	B	68.14
38+01.49	63.83	A	68.11
38+11.58	63.83	B	68.08
38+21.68	63.83	A	68.05
38+31.77	63.83	B	68.03
38+41.87	63.83	A	68.00
38+51.96	63.83	B	67.97
38+62.06	63.83	A	67.94
38+72.15	63.83	B	67.91
38+82.25	63.83	A	67.89
38+92.34	63.83	B	67.86
39+02.44	63.83	A	67.83
39+12.53	63.83	B	67.80
39+22.63	63.83	A	67.78
39+32.73	63.83	B	67.75
39+42.82	63.83	A	67.72
39+52.92	63.83	B	67.69
39+63.01	63.83	A	67.67
39+73.11	63.83	B	67.64
39+83.20	63.83	A	67.61
39+93.30	63.83	B	67.58
40+03.39	63.83	A	67.55
40+13.49	63.83	B	67.53
40+23.58	63.83	A	67.50
40+33.68	63.83	B	67.47
40+43.77	63.83	A	67.44
40+53.87	63.83	B	67.42
40+63.97	63.83	A	67.39
40+74.06	63.83	B	67.36
40+84.16	63.83	A	67.33
40+94.25	63.83	B	67.31
41+02.33	63.83	A	67.28

	COPING OFFSETS					
	Left			Right		
	Station	Offset to C.L. Beam	Distance from C.L. Beam to Coping	Station	Offset to C.L. Beam	Distance from C.L. Beam to Coping
Bent. No. 1	33+96.87	59.9226	4.5774	34+03.08	59.9211	4.5789
Quarter Point	34+20.20	59.8140	4.6860	34+26.00	60.0503	4.4497
Mid Point	34+43.53	59.7839	4.7161	34+48.92	60.0995	4.4005
Quarter Point	34+66.86	59.8323	4.6677	34+71.85	60.0689	4.4311
Bent. No. 2	34+90.19	59.9592	4.5408	34+94.77	59.9584	4.5416
Quarter Point	35+13.52	59.8478	4.6522	35+17.69	60.0847	4.4153
Mid Point	35+36.86	59.8150	4.6850	35+40.61	60.1311	4.3689
Quarter Point	35+60.19	59.8606	4.6394	35+63.53	60.0976	4.4024
Bent. No. 3	35+83.52	59.9846	4.5154	35+86.45	59.9843	4.5157
Quarter Point	36+36.49	59.3822	5.1178	36+38.49	60.6059	3.8941
Mid Point	36+89.46	59.1841	5.3159	36+90.53	60.8159	3.6841
Quarter Point	37+42.44	59.3904	5.1096	37+42.57	60.6914	3.8086
Bent. No. 4	37+95.40	60.0010	4.4990	37+94.60	60.0010	4.4990
Quarter Point	38+21.05	59.8557	4.6443	38+19.80	60.1425	4.3575
Mid Point	38+46.69	59.8051	4.6949	38+44.99	60.1875	4.3125
Quarter Point	38+72.34	59.8494	4.6506	38+70.18	60.1360	4.3640
Bent. No. 5	38+97.98	59.9884	4.5116	38+95.38	59.9881	4.5119
Quarter Point	39+23.62	59.8396	4.6604	38+20.57	60.1262	4.3738
Mid Point	39+49.27	59.7857	4.7143	39+45.76	60.1677	4.3323
Quarter Point	39+74.91	59.8266	4.6734	39+70.95	60.1128	4.3872
Bent. No. 6	40+00.56	59.9622	4.5378	39+96.15	59.9615	4.5385
Quarter Point	40+26.20	59.8101	4.6899	40+21.34	60.0961	4.4039
Mid Point	40+51.85	59.7528	4.7472	40+46.53	60.1343	4.3657
Quarter Point	40+77.49	59.7903	4.7097	40+71.73	60.0759	4.4241
Bent. No. 7	41+03.14	59.9226	4.5774	40+96.92	59.9211	4.5789

Note:

1. Work This Sheet With Miscellaneous Bridge Details Sheet (1 Of 5)
2. The Stations And Offsets Listed Above Are Measured From The ℄ Construction To ℄ Of Pipe. Stations And Offsets Are Not Measured To The ℄ Beam.
3. The Contractor Shall Adjust The Stations Shown Above For The Type B Hangers So That The Hanger Location Will Properly Align With The Attachment Points On The Concrete Beams And Steel Girders.

J:/JS02/07/97 4:34PM N:\000BR\LK8\LK8W SC4.DWG

REVISIONS

Date	By	Description	Date	By	Description

	Names	Dates
Drawn by	JLA/JJS	3/96
Checked by	MKA	3/96
Designed by	MKA	3/96
Checked by	PM	3/96
Approved by	Peeter Mannik, P.E.	

ENGINEER OF RECORD:
DYER, RIDDLE, MILLS AND PRECOURT, INC.
1605 EAST COLONIAL DRIVE
ORLANDO, FLORIDA 32803

LOGO: DRMP DYER, RIDDLE, MILLS & PRECOURT, INC. ENGINEERS SURVEYORS

SEAL: Peeter Mannik 3/4/98

FLORIDA DEPARTMENT OF TRANSPORTATION
STRUCTURES DESIGN OFFICE

ROAD NO.	COUNTY	PROJECT NO.
SR414	SEMINOLE	77002-3503

SHEET TITLE: MISCELLANEOUS BRIDGE DETAILS

PROJECT NAME: MAITLAND BOULEVARD OVER LAKE BOSSE

Drawing No. 3 OF 5

Index No.

FED. ROAD DIV. NO.	STATE	PROJECT NO.	FISCAL YEAR	SHEET NO.
3	FLA.		98	B-51

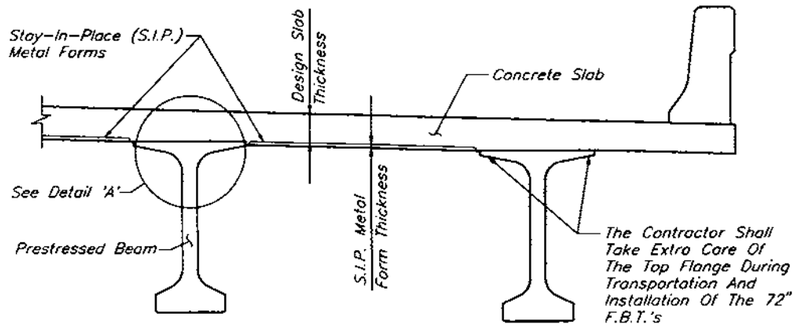

PARTIAL SECTION THRU SUPERSTRUCTURE

(Showing Typical Details And Notes For S.I.P. Metal Forms)

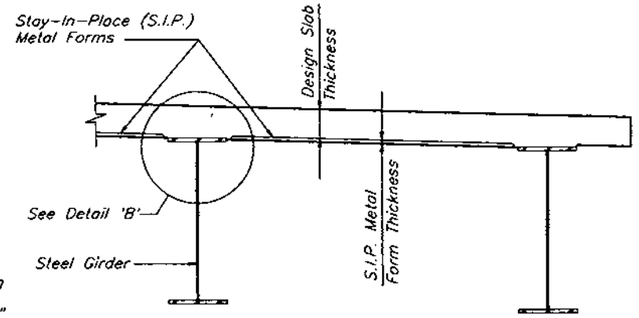

PARTIAL SECTION THRU SUPERSTRUCTURE

(Showing Typical Details And Notes For S.I.P. Metal Forms)

NOTE: Removable Forms Shall Be Used At The Closure Pour Cap Between Girders G-28 And G-29. See Sheet B-41 And B-42 For Closure Pour Cap Location And Details.

EXPANSION JOINT SEAL NOTES

1. The Cost Of All Labor And Materials Required For Construction Of Expansion Joints Shall Be Paid For In Bid Item No. 460-7-4 Expansion Joint Seal (Strip Elastomeric).
2. The Contractor Shall Submit Shop Drawings Showing All Expansion Joint Materials Including Seal Manufacturer, Seal Model Number, Seal Movement Range, And Proposed Method Of Installation With All Sizes And Dimensions Shown. The Seal Selected Shall Be A Heavy Duty Bridge Seal Sized To Perform Satisfactorily For The Joint Opening Range Indicated In Accordance With The Manufacturer's Recommendations. Compression Seal Shall Be Continuous Across The Bridge Deck. All Contact Surfaces Between The Strip Seal And The Concrete Shall Be Thoroughly Coated With A Strip Seal Adhesive Before Setting Seal In Place. Installation Shall Be Performed According To Manufacturer's Recommendations.
3. The Following Is The Strip Seal Data:
   a. Seal Opening Ranges (in.):
      Minimum = 1"
      Maximum = 2½"
   b. Design Opening At 70°F (in.) = ¾"
   c. Temperature Adjustment (in/°F) = 0.0024
   d. Total Movement = 1½"
4. For Joint Construction Other Than 70°F, The Contractor Shall Adjust The Opening As Indicated: For Temperature Above 70°F Decrease The Design Opening, For Temperature Below 70°F Increase The Design Opening Accordingly.

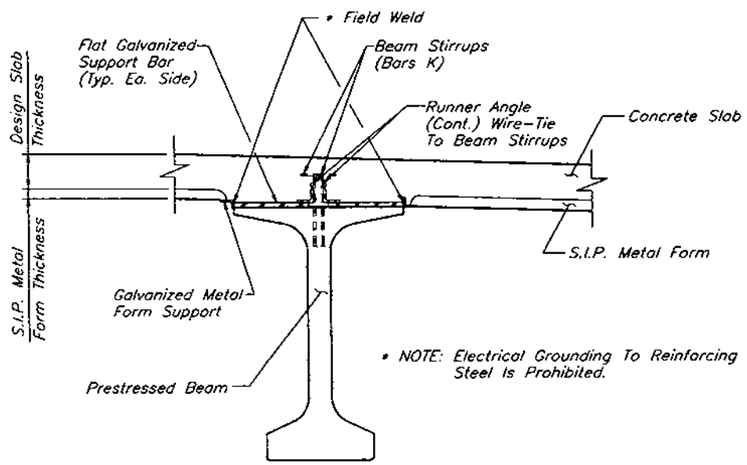

DETAIL 'A'

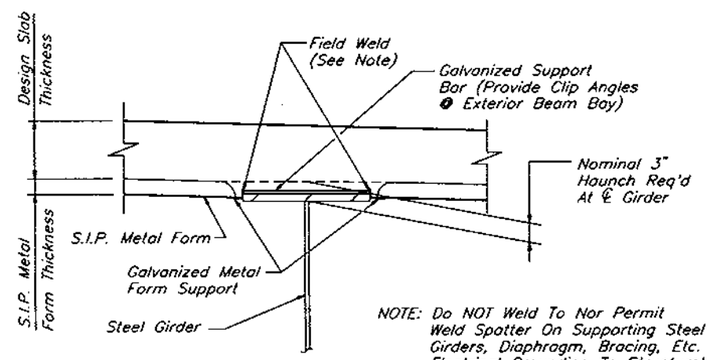

DETAIL 'B'

NOTE: Do NOT Weld To Nor Permit Weld Spatter On Supporting Steel Girders, Diaphragm, Bracing, Etc. Electrical Grounding To Structural Steel Is Prohibited. See Section 400 Of The Specifications For Field Welding Of S.I.P. Forms In Place.

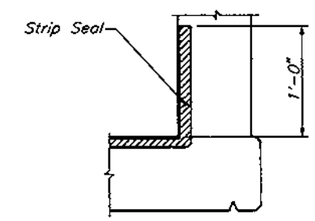

SECTION ALONG ℄ JOINT

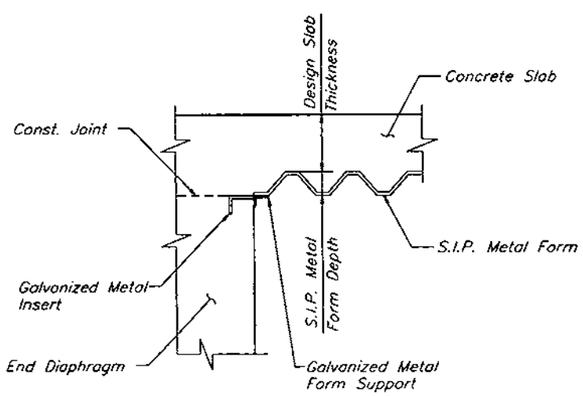

PARTIAL SECTION THRU END OF SPAN
STAY-IN-PLACE FORMS
SPANS 1,2,4,5 & 6

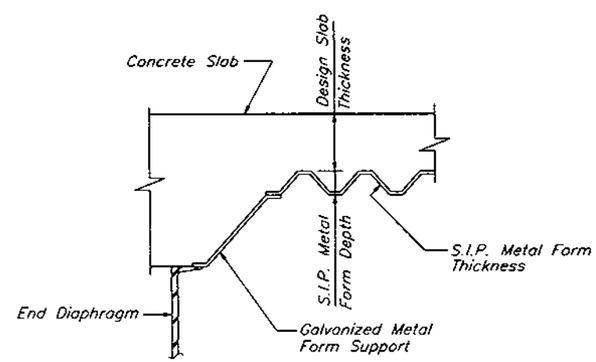

PARTIAL SECTION THRU END OF SPAN
STAY-IN-PLACE FORMS
SPAN 3

See Sheet B-42

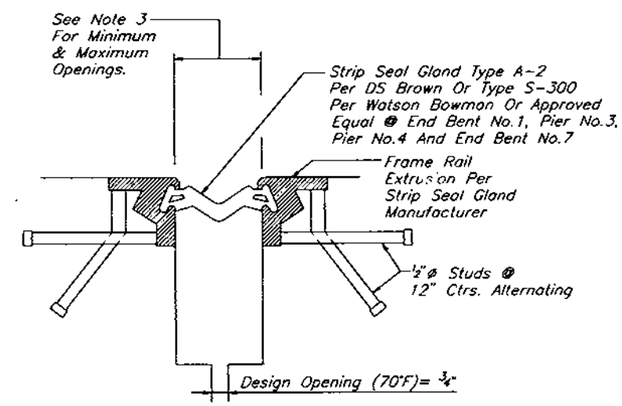

EXPANSION JOINT DETAIL

REVISIONS					
Date	By	Description	Date	By	Description

	Names	Dates
Drawn by	JLA/JJS	3/96
Checked by	MKA	3/96
Designed by	MKA	3/96
Checked by	PM	3/96
Approved by	Peeter Monnik, P.E.	

ENGINEER OF RECORD: DYER, RIDDLE, MILLS AND PRECOURT, INC. 1506 EAST COLONIAL DRIVE ORLANDO, FLORIDA 32803

LOGO: DRMP

SEAL: 3/4/98

FLORIDA DEPARTMENT OF TRANSPORTATION
STRUCTURES DESIGN OFFICE

ROAD NO.	COUNTY	PROJECT NO.
SR414	SEMINOLE	77002-3503

SHEET TITLE: MISCELLANEOUS BRIDGE DETAILS

PROJECT NAME: MAITLAND BOULEVARD OVER LAKE BOSSE

Drawing No. 4 Of 5

Index No.

JA/JS02/24/98 1:57PM M:\000BP\LK8\LK8MISC3.DWG

FED. ROAD. DIV. NO.	STATE	PROJECT NO.	FISCAL YEAR	SHEET NO.
3	FLA.		98	B-52

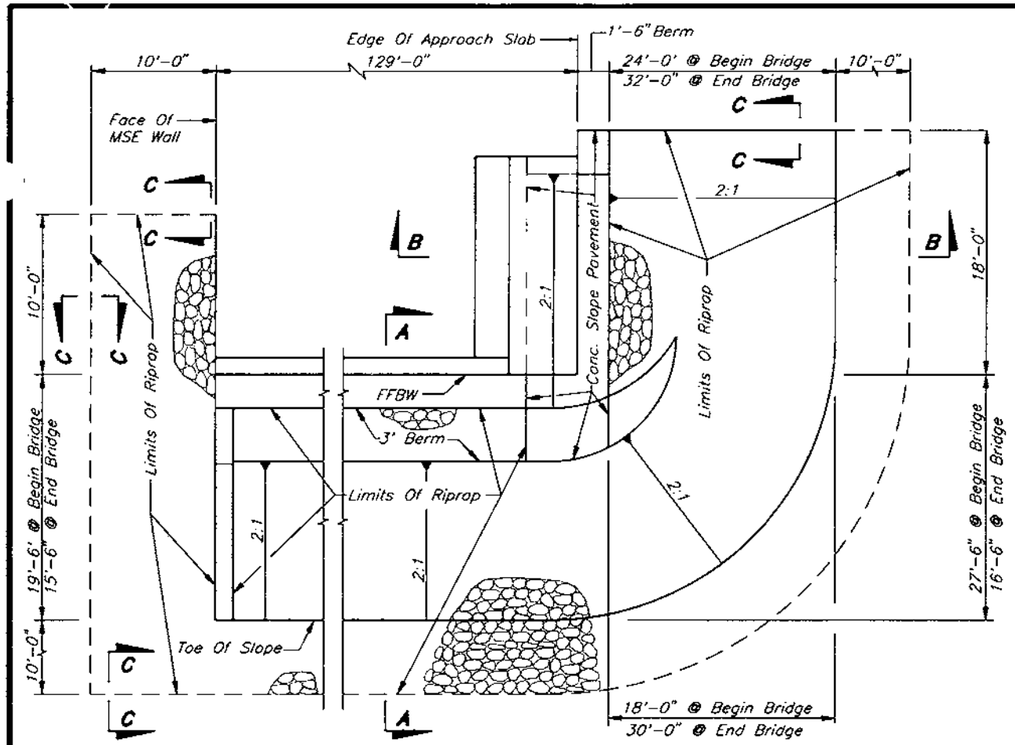

PARTIAL PLAN
RUBBLE PROTECTION DETAILS
(N.T.S.)

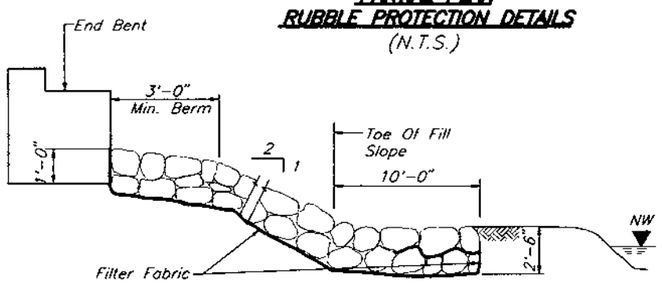

SECTION A-A

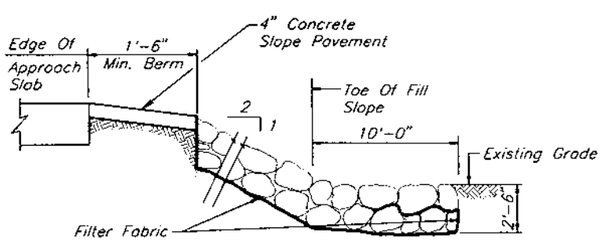

SECTION B-B

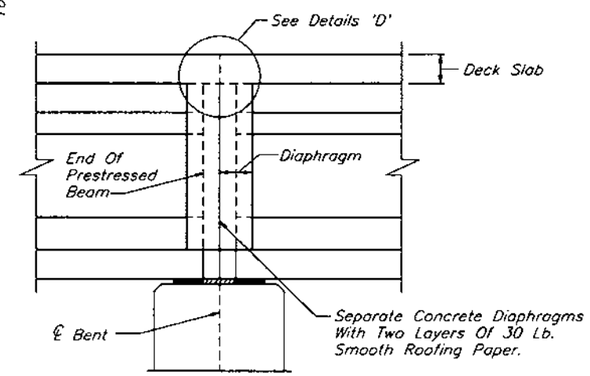

SECTION AT INTERIOR SUPPORT

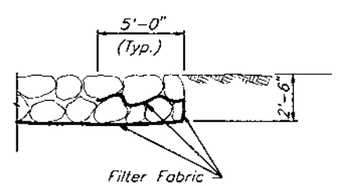

SECTION C-C

NOTE: Filter Fabric Shall Be Type D-2 (A.O.S. 70-100) In Accordance With Index No. 199 Of Roadway and Traffic Design Standards.

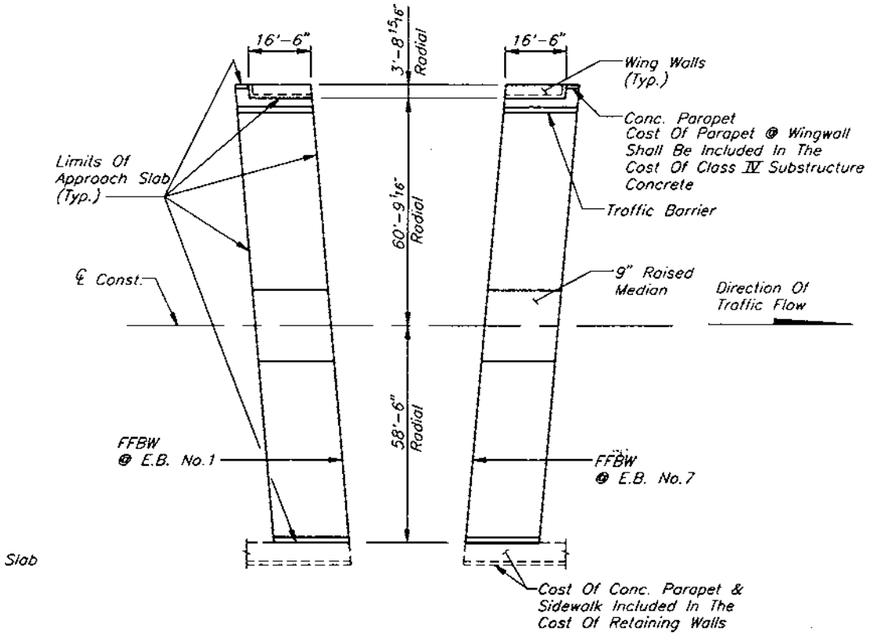

APPROACH SLAB DETAILS

Note: For Additional Details See Roadway Plans

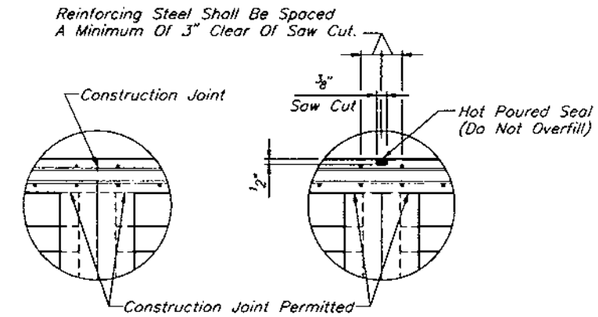

DETAIL D1

NOTE: Detail D1 Shall Apply Where A Pour Terminates At An Intermediate Support.

ALTERNATE DETAIL D2

NOTE: Optional At All Locations

NOTE: At The Option Of The Contractor Alternate Detail D2 May Be Used When Slab Pours Are Continuous Over Intermediate Supports. The Cost Of Constructing Alternate Joints D2 At Intermediate Supports Shall Be At The Contractors Expense. The Saw Cut Shall Be Made No Later Than The Day Following Concrete Placement.

DETAILS OF CONSTRUCTION JOINTS AT INTERMEDIATE SUPPORTS

REVISIONS

Date	By	Description	Date	By	Description

	Names	Date
Drawn by	JLA/JJS	3/96
Checked by	MKA	3/96
Designed by	MKA	3/96
Checked by	PM	3/96
Approved by	Peeter Mannik, P.E.	

ENGINEER OF RECORD:
DYER, RIDDLE, MILLS AND PRECOURT, INC.
1605 EAST COLONIAL DRIVE
ORLANDO, FLORIDA 32803

LOGO: DRMP DYER, RIDDLE, MILLS & PRECOURT, INC. ENGINEERS · SURVEYORS

SEAL: Peeter Mannik 3/9/96

FLORIDA DEPARTMENT OF TRANSPORTATION
STRUCTURES DESIGN OFFICE

ROAD NO.	COUNTY	PROJECT NO.
SR414	SEMINOLE	77002-3503

SHEET TITLE: **MISCELLANEOUS BRIDGE DETAILS**

PROJECT NAME: **MAITLAND BOULEVARD OVER LAKE BOSSE**

Sheet No. 5 Of 5

Index No.

JA/JS04/03/97 10:52AM MA 000BR\LKH\...KBMISC2.DWG

FED. ROAD DIV. NO.	STATE	PROJECT NO.	FISCAL YEAR	SHEET NO.
3	FLA.		98	B-53

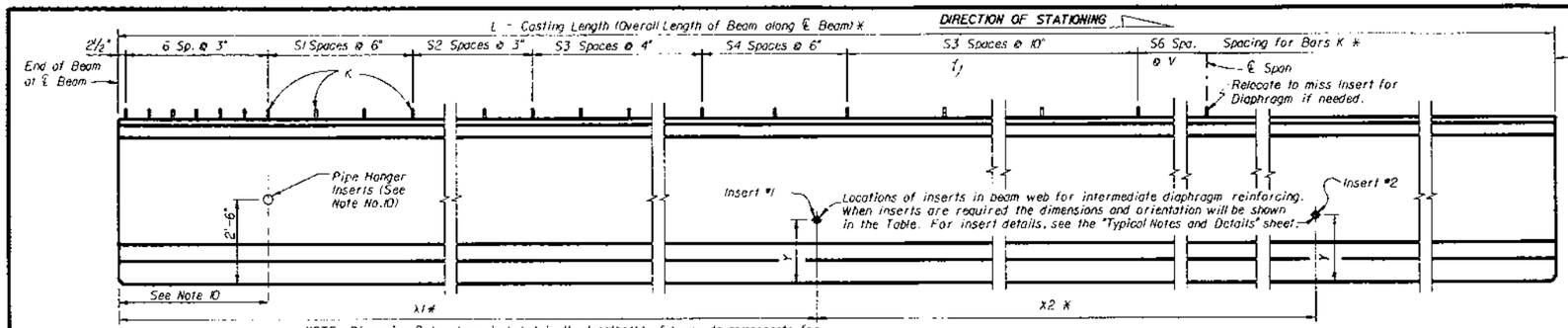

NOTE: Dimension R has been included in the lengths(L) of beams to compensate for elastic and time-dependent shortening effects.

ELEVATION

BEAM NOTES

1. Work this sheet with Standard Index No. 110.

* Note: All longitudinal beam dimensions shown on this sheet with a single asterisk (*) are measured along the top of the beam at the centerline of beam.

** Note: End of beam bearing dimensions "J" and "K" are measured along the bottom of the beam.

BILL OF REINFORCING STEEL FOR ONE BEAM ONLY

MARK	SIZE	NO. REQUIRED	LENGTH (1)
A	5	8	See Table
D (2)(6)	5	38	Varies 5'-11" Min.
K (2)	4	See Table	7'-9"
L (3)(4)	4	22	6'-8"
M	4	See Table	3'-0"
N (5)	⅜" Ø Strand	4	See Table
Z (2)	4	28	7'-6"

BENDING DIAGRAMS (1)

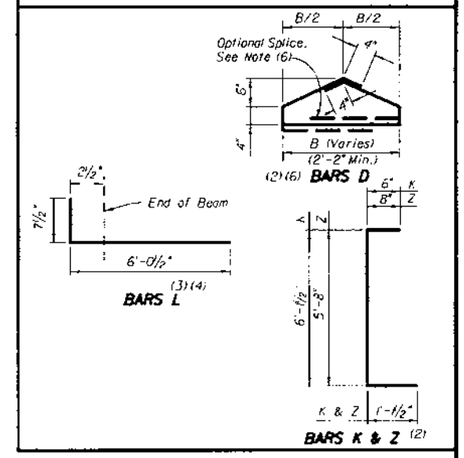

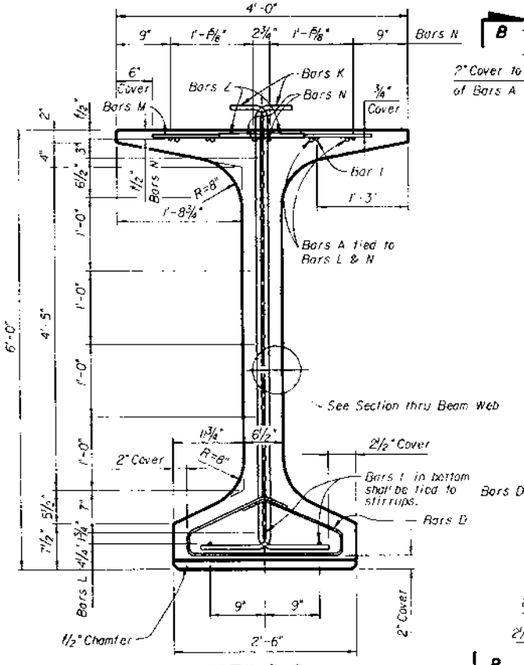

VIEW B-B

(With strands omitted, see Table for reference to strand pattern.)

† Dimension K: 1'-1½" @ Pier; 1'-0¼" @ End Bent

NOTE: Place Bars K and Z one (1) each space (alternate).

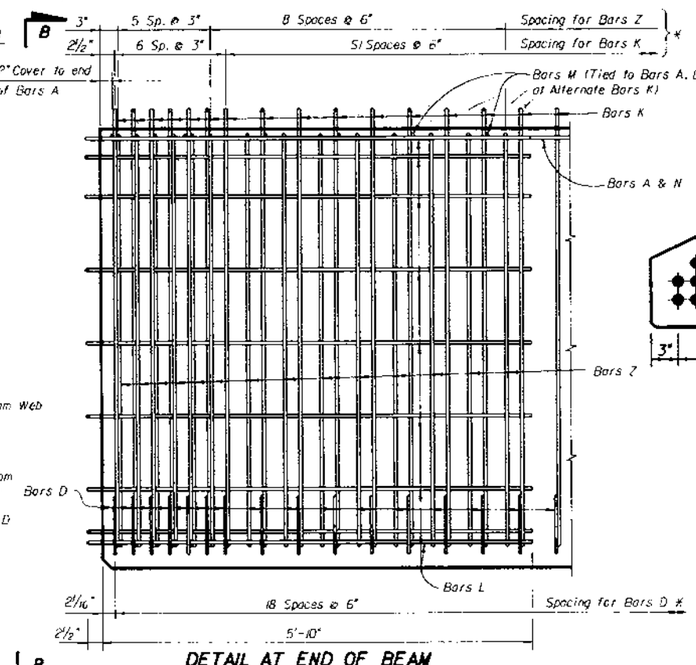

DETAIL AT END OF BEAM

NOTE: Stirrups shall be placed and tied to the top of the fully bonded prestressing strands in the bottom row.

½" dia. -270k low relaxation strands
area/strand = 0.153 in.
pull each strand to 30.98 kips per strand

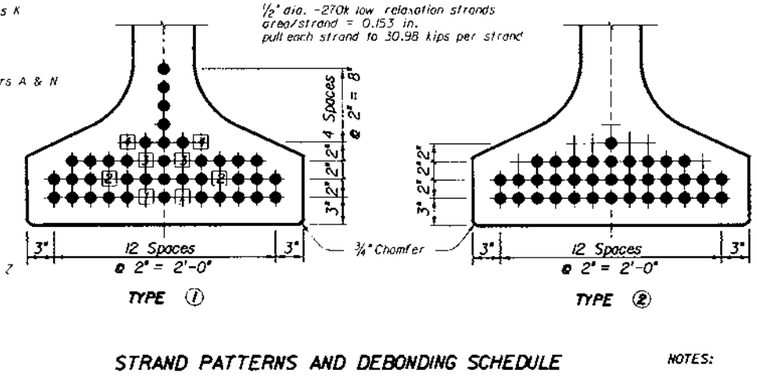

STRAND PATTERNS AND DEBONDING SCHEDULE

NOTE: ● -indicates fully bonded strands.

1 -Indicates referenced pair of strands to be debonded 30'-0" which is measured from the ℄ bearing. *

2 -Indicates referenced pair of strands to be debonded 20'-0" which is measured from the ℄ bearing. *

3 -Indicates referenced pair of strands to be debonded 10'-0" which is measured from the ℄ bearing. *

4 -Indicates referenced pair of strands to be debonded 5'-0" which is measured from the ℄ bearing. *

NOTES:

(1) All bar dimensions are out-to-out.

(2) Bars D, K, and Z shall be bent around pins having the following diameters for respective sizes:

Bar Size	Pin Diameters
#3	1"
#4	2"

(3) Bars L shall be bent prior to the beam leaving the prestressing yard. For treatment of bars L at skewed beam ends, see "Plan Ends of Beams".

(4) Caution should be used with Bars L in the ends of exterior beams to assure that the bent portion of the bar is properly oriented so that the bar will be embedded in the diaphragm concrete.

(5) Bars N shall be either ASTM A416, Grade 250 or 270, seven wire strands ⅜" Ø or larger, stressed to 10,000 lbs. each.

(6) The minimum Dimension B and length of Bars D shown apply to one-piece Bars D placed perpendicular to the centerline of the beam. Dimension B and the length of Bars D for beams with skewed ends vary with the skew (See "Plan Ends of Beams").
At the Contractor's option, Bars D may be fabricated either as a two-piece bar with a 1'-2" lap splice of the bottom legs or may be welded wire fabric, one or two-piece, provided the wire size and spacing furnishes the same steel area as the No. 5 Bars shown.

(7) (NS) means Near Side and (FS) means Far Side, both referring to which face of the beam web is to receive the insert for the dimensioned location. (NS) and (FS) are referenced to the DIRECTION OF STATIONING shown.

(8) CONTRACTOR'S OPTION: Welded deformed wire fabric reinforcement may be used in lieu of Bars D, K, L and Z provided the wire sizes and spacings match those shown on this sheet for these bars.

(9) Optional stranding shall comply in all respects with the Departments Structures Design Guidelines.

(10) Inserts for pipe attachment are required for Beams B-11, B-34, B-45 And B-56. See Miscellaneous Detail Sheets B-48 and B-50 for Pipe Hanger Locations.

TABLE OF BEAM VARIABLES

BEAM ID.	CONCRETE PROPERTIES STRENGTHS CLASS	REL. (f'ci)	28-DAY (f'c)	STND PTRN TYPE	PLAN VIEW CASE	END ELEV COND.	END OF BEAM AND BEARING DIMENSIONS ** ANGLE Ø	DIM P	DIM J	DIM K	BEAM DIMENSIONS * DIM L	DIM R	DIM V	NUMBER OF SPACES FOR STIRRUP BARS K S1	S2	S3	S4	S5	S6	DIAPHRAGM INSERT LOCATIONS* DIM X1	DIM X2	DIM Y	NS/FS (7) #1	#2	REINFORCING STEEL A LENGTH*	K NO. REQ'D	M NO. REQ'D	N LENGTH*
B1-THRU B-11	V	4500	6500	2	1	1	90°00'00"	0	6½"	†	91'-8⅞"	⅝"	9 9/16"	8	0	28	10	30	1		–	–	–	–	13'-8"	153	77	92'-3"
B-12 THRU B-22	V	4500	6500	2	1	1	90°00'00"	0	6½"	1 1/2"	91'-9⅝"	⅝"	10 5/16"	8	0	28	10	30	1	–	–	–	–	–	13'-8"	153	77	92'-3"
B-34 THRU B-55	V	4500	6500	1	1	1	90°00'00"	0	6½"	1 1/2"	100'-1 1/8"	13/16"	11 7/16"	8	16	21	49	8	1	–	–	–	–	–	15'-0"	205	103	101'-5"
B-56 THRU B-66	V	4500	6500	1	1	1	90°00'00"	0	6½"	†	100'-1 1/8"	13/16"	10 11/16"	8	16	21	49	8	1	–	–	–	–	–	15'-0"	205	103	101'-5"

(With strands omitted, see Table for reference to strand pattern.)

† Dimension K: 1'-1½" @ Pier; 1'-0¼" @ End Bent

NOTE: Place Bars K and Z one (1) each space (alternate).

REVISIONS Date	By	Description	Date	By	Description
			94R		

	Names	Dates
Drawn by	JJS	3/96
Checked by	KCH	3/96
Designed by	KCH	3/96
Checked by	MKA	3/96
Approved by	Peeter Mannik, PE	

ENGINEER OF RECORD:
DYER, RIDDLE, MILLS AND PRECOURT, INC.
1905 EAST COLONIAL DRIVE
ORLANDO, FLORIDA 32803

LOGO: DRMP DYER, RIDDLE, MILLS & PRECOURT, INC. ENGINEERS · SURVEYORS

SEAL: Peeter Mannik 3/4/98

FLORIDA DEPARTMENT OF TRANSPORTATION
STRUCTURES DESIGN OFFICE

ROAD NO.	COUNTY	PROJECT NO.
SR414	SEMINOLE	77002-3503

SHEET TITLE: FLORIDA BULB-T 72 BEAMS

PROJECT NAME: MAITLAND BLVD. OVER LAKE BOSSE

Drawing No. 1 of 1

Index No. S-113

LKBS113.DGN

LOCATION – END BENT NO.1 AND END BENT NO.7 (PHASE II) (2 REQUIRED)

MARK		LENGTH		NO.	TYPE	STYLE		B			C			D			E			F			H			J		K		N	Ø
SIZE	DES.	FT.	IN.	BARS	BAR	A	G	FT.	IN.	FR.	FT.	IN.	FR.	FT.	IN.	FR.	FT.	IN.	FR.	FT.	IN.	FR.	FT.	IN.	FR.	FT.	IN.	FT.	IN.	NO.	ANG.
8	A01	44	3	10	*			44	3	0																					
8	A02	41	8	10	*			41	8	0																					
4	A03	8	2	8	5			2	3	0	2	10	0	0	5	0	0	5	0												
4	A04	10	11	85	4	4	4	2	3	0	2	10	0																		
4	A05	7	6	172	1			7	6	0																					
4	A06	43	11	14	1			43	11	0																					
4	A07	40	4	14	1			40	4	0																					
6	A09	1	6	20	1			1	6	0																					
4	A14	4	10	64	11			1	10	0	1	6	0	1	6	0															
4	A15	3	6	40	1			3	6	0																					
4	A16	5	1	7	10			2	10	0	2	3	0																		
4	A17	9	8	4	1			9	8	0																					
8	W01	18	4	8	1			18	4	0																					
5	W02	18	4	14	12			15	10	0	2	6	0																		87
4	W03	8	2	1	5			2	3	0	2	10	0	0	5	0	0	5	0												
4	W04	10	11	15	4	4	4	2	3	0	2	10	0																		
5	W05	11	6	17	10			8	6	0	3	0	0																		87
8	W06	14	0	6	12			7	0	0	7	0	0																		
5	W07	15	10	4	1			15	10	0																					
4	W08	8	6	17	1			8	6	0																					
5	W09	5	0	7	12			2	6	0	2	6	0																		87
4	P	4	10	17	23			2	2	0	0	2	0	2	2	0															
4	S	16	2	4	1			16	2	0																					

LOCATION – END BENT NO.1 AND END BENT NO.7 (PHASE III) (2 REQUIRED)

MARK		LENGTH		NO.	TYPE	STYLE		B			C			D			E			F			H			J		K		N	Ø
SIZE	DES.	FT.	IN.	BARS	BAR	A	G	FT.	IN.	FR.	FT.	IN.	FR.	FT.	IN.	FR.	FT.	IN.	FR.	FT.	IN.	FR.	FT.	IN.	FR.	FT.	IN.	FT.	IN.	NO.	ANG.
4	A03	8	2	3	5			2	3	0	2	10	0	0	5	0	0	5	0												
4	A04	10	11	40	4	4	4	2	3	0	2	10	0																		
4	A05	7	6	80	1			7	6	0																					
4	A08	39	4	14	1			39	4	0																					
6	A09	1	6	10	1			1	6	0																					
8	A11	4	5	20	33	6		4	5	0	0	2	0																		
8	A12	39	6	10	1			39	6	0																					
4	A14	4	10	24	11			1	10	0	1	6	0	1	6	0															
4	A15	3	6	15	1			3	6	0																					

* MECHANICAL COUPLER AT ONE END

8A10 & 5A13 BARS ARE NOT USED

NOTE:
At Locations Noted The Contractor Shall Use Approved Mechanical Coupler That Will Develop In Tension At Least 125 Percent Of Yield Strength Of The Reinforcing Bar To Be Spliced. Full Tensile Strength Splices Are Required. The Cost Of Furnishing And Installing Mechanical Coupler Shall Be Included In The Contract Unit Price Of Reinforcing Steel (Substructure). The Contractor Shall Submit Shop Drawings Of Proposed Mechanical Coupler System For Approval Prior To Installation.

REVISIONS

Date	By	Description	Date	By	Description

	Names	Dates
Drawn by	JLA/JJS	3/96
Checked by	MKA	3/96
Designed by	MKA	3/96
Checked by	PM	3/96
Approved by	Peeter Monnik, P.E.	

ENGINEER OF RECORD:
DYER, RIDDLE, MILLS AND PRECOURT, INC.
1505 EAST COLONIAL DRIVE
ORLANDO, FLORIDA 32803

LOGO: DRMP DYER, RIDDLE, MILLS & PRECOURT, INC. ENGINEERS SURVEYORS

SEAL: Peeter Monnik 3/9/98

FLORIDA DEPARTMENT OF TRANSPORTATION
STRUCTURES DESIGN OFFICE

ROAD NO.	COUNTY	PROJECT NO.
SR414	SEMINOLE	77002-3503

SHEET TITLE: **REINFORCING BAR LIST**

PROJECT NAME: **MAITLAND BOULEVARD OVER LAKE BOSSE**

Drawing No.: 1 OF 3

Index No.:

JA/JSS2/10-97 08:15AM H:\3008P\LKB\LIBRB2.DWG

LOCATION – PIER NO. 3 AND PIER NO.4 (PHASE II) (REQUIRED 2)

MARK SIZE	MARK DES.	LENGTH FT. IN.	NO. BARS	TYPE BAR	STYLE A	STYLE G	B FT. IN. FR.	C FT. IN. FR.	D FT. IN. FR.	E FT. IN. FR.	F FT. IN. FR.	H FT. IN. FR.	J FT. IN.	K FT. IN.	N NO.	Ø ANG.
8	P01	41-8	44	*			41-8-0									
5	P03	14-4	18	5			3-3-0	5-0-0	2-6-0	0-4-0						
5	P04	17-6	204	4	4	4	3-3-0	5-0-0								
4	P05	41-4	12	1			41-4-0									
4	P06	9-7	84	11			3-7-0	3-0-0	3-0-0							
4	P08	3-8	72	1			3-8-0									
4	P09	4-8	64	11			1-8-0	1-6-0	1-6-0							
4	P10	5-4	64	11			2-4-0	1-6-0	1-6-0							
5	P12	4-6	48	10			2-3-0	2-3-0								
4	P14	10-2	88	23			3-0-0	1-4-0	3-0-0							

LOCATION – PIER NO. 3 AND PIER NO.4 (PHASE III) (REQUIRED 2)

MARK SIZE	MARK DES.	LENGTH FT. IN.	NO. BARS	TYPE BAR	STYLE A	STYLE G	B FT. IN. FR.	C FT. IN. FR.	D FT. IN. FR.	E FT. IN. FR.	F FT. IN. FR.	H FT. IN. FR.	J FT. IN.	K FT. IN.	N NO.	Ø ANG.
8	P02	39-6	22	1			39-6-0									
5	P03	14-4	8	5			3-3-0	5-0-0	2-6-0	0-4-0						
5	P04	17-6	100	4	4	4	3-3-0	5-0-0								
4	P06	9-7	40	11			3-7-0	3-0-0	3-0-0							
4	P07	39-6	6	1			39-6-0									
4	P08	3-8	27	1			3-8-0									
4	P09	4-8	24	11			1-8-0	1-6-0	1-6-0							
4	P10	5-4	24	11			2-4-0	1-6-0	1-6-0							
5	P12	4-6	18	10			2-3-0	2-3-0								
8	P13	4-5	44	33	6		4-5-0	0-2-0								
4	P14	10-2	32	23			3-0-0	1-4-0	3-0-0							

LOCATION – PIERS NO. 2, 5 AND 6 (PHASE II) (REQUIRED 3)

MARK SIZE	MARK DES.	LENGTH FT. IN.	NO. BARS	TYPE BAR	STYLE A	STYLE G	B FT. IN. FR.	C FT. IN. FR.	D FT. IN. FR.	E FT. IN. FR.	F FT. IN. FR.	H FT. IN. FR.	J FT. IN.	K FT. IN.	N NO.	Ø ANG.
8	P01	41-8	44	*			41-8-0									
5	P03	14-4	16	5			3-3-0	5-0-0	2-6-0	0-4-0						
5	P04	17-6	216	4	4	4	3-3-0	5-0-0								
4	P08	3-8	64	1			3-8-0									
4	P09	4-8	128	11			1-8-0	1-6-0	1-6-0							
4	P14	10-2	80	23			3-0-0	1-4-0	3-0-0							

LOCATION – PIERS NO. 2, 5 AND 6 (PHASE III) (REQUIRED 3)

MARK SIZE	MARK DES.	LENGTH FT. IN.	NO. BARS	TYPE BAR	STYLE A	STYLE G	B FT. IN. FR.	C FT. IN. FR.	D FT. IN. FR.	E FT. IN. FR.	F FT. IN. FR.	H FT. IN. FR.	J FT. IN.	K FT. IN.	N NO.	Ø ANG.
8	P02	39-6	22	1			39-6-0									
5	P03	14-4	6	5			3-3-0	5-0-0	2-6-0	0-4-0						
5	P04	17-6	108	4	4	4	3-3-0	5-0-0								
4	P08	3-8	24	1			3-8-0									
4	P09	4-8	48	11			1-8-0	1-6-0	1-6-0							
8	P13	4-5	44	33	6		4-5-0	0-2-0								
4	P14	10-2	24	23			3-0-0	1-4-0	3-0-0							

** Mechanical Coupler At One End*
5P11 Bar Not Used

NOTE:
At Locations Noted The Contractor Shall Use Approved Mechanical Coupler That Will Develop In Tension At Least 125 Percent Of Yield Strength Of The Reinforcing Bar To Be Spliced. Full Tensile Strength Splices Are Required. The Cost Of Furnishing And Installing Mechanical Coupler Shall Be Included In The Contract Unit Price Of Reinforcing Steel (Substructure). The Contractor Shall Submit Shop Drawings Of Proposed Mechanical Coupler System For Approval Prior To Installation.

LOCATION – SUPERSTRUCTURE (SPANS 1 & 2) REQUIRED 1

MARK SIZE	MARK DES.	LENGTH FT. IN.	NO. BARS	TYPE BAR	STYLE A	STYLE G	B FT. IN. FR.	C FT. IN. FR.	D FT. IN. FR.	E FT. IN. FR.	F FT. IN. FR.	G FT. IN. FR.	H FT. IN. FR.	J FT. IN. FR.	K FT. IN. FR.	N NO.	Ø ANG.
5	D01	13-1	440	7			6-0-0	0-5-0	0-4-0	0-4-0							
5	D02	10-3	80	7			4-7-0	0-5-0	0-4-0	0-4-0							
4	D03	125-3	24	2			1-9-0	120-0-0								3	
4	D04	10-11	160	1			10-11-0										
4	D05	9-2	80	1			9-2-0										
5	S01	47-6	888	1			47-6-0										
5	S03	7-4	444	17	1		6-9-0										
5	S05	190-8	259	2			2-0-0	184-8-0								3	
5	S06	40-0	128	1			40-0-0										
4	S12	1-9	248	32			0-9-0	0-6-0	0-6-0								
4	S13	18-6	124	1			18-6-0										
4	S14	150-8	13	2			1-9-0	184-8-0								4	
5	S20	41-6	888	1			41-6-0										
5	S23	23-9	444	1			38-0-0										
5	S24	29-9	444	1			50-0-0										
4	P	5-2	370	23			2-4-0	0-2-0	2-4-0								
4	S	191-8	8	2			1-9-0	184-8-0								4	

LOCATION – SUPERSTRUCTURE (SPANS 3) REQUIRED 1

MARK SIZE	MARK DES.	LENGTH FT. IN.	NO. BARS	TYPE BAR	STYLE A	STYLE G	B FT. IN. FR.	C FT. IN. FR.	D FT. IN. FR.	E FT. IN. FR.	F FT. IN. FR.	G FT. IN. FR.	H FT. IN. FR.	J FT. IN. FR.	K FT. IN. FR.	N NO.	Ø ANG.
5	S01	47-6	1260	1			47-6-0										
5	S02	2-6	1260	33	6		2-6-0	0-2-0									
5	S03	7-4	630	17	1		6-9-0										
5	S11	215-8	303	2			2-0-0	209-8-0								3	
4	S12	1-9	280	32			0-9-0	0-6-0	0-6-0								
4	S13	18-6	140	1			18-6-0										
4	S17	216-8	13	2			1-9-0	209-8-0								4	
5	S15	9-6	100	1			9-6-0										
4	S16	7-6	300	44			2-0-0	0-8-0	1-0-0	2-9-0	0-10-0	0-8-0					
5	S20	41-6	1260	1			41-6-0										
5	S23	26-1	630	1			26-1-0										
5	S24	32-1	630	1			32-1-0										
5	S25	14-1	630	1			14-1-0										
5	S26	20-1	630	1			20-1-0										
4	P	5-2	420	23			2-4-0	0-2-0	2-4-0								
4	S	216-8	8	2			1-9-0	209-8-0									

LOCATION – SUPERSTRUCTURE (SPANS 4 & 5) REQUIRED 1

MARK SIZE	MARK DES.	LENGTH FT. IN.	NO. BARS	TYPE BAR	STYLE A	STYLE G	B FT. IN. FR.	C FT. IN. FR.	D FT. IN. FR.	E FT. IN. FR.	F FT. IN. FR.	G FT. IN. FR.	H FT. IN. FR.	J FT. IN. FR.	K FT. IN. FR.	N NO.	Ø ANG.
5	D01	13-1	440	7			6-0-0	0-5-0	0-4-0	0-4-0							
5	D02	10-3	80	7			4-7-0	0-5-0	0-4-0	0-4-0							
4	D03	125-3	24	2			1-9-0	120-0-0								3	
4	D04	10-11	160	1			10-11-0										
4	D05	9-2	80	1			9-2-0										
5	S01	47-6	976	1			47-6-0										
5	S03	7-4	488	17	1		6-9-0										
5	S06	40-0	128	1			40-0-0										
5	S07	209-2	259	2			2-0-0	203-2-0								3	
4	S12	1-9	272	32			0-9-0	0-6-0	0-6-0								
4	S13	18-6	136	1			18-6-0										
4	S18	210-2	13	2			1-9-0	203-2-0								4	
5	S20	41-6	976	1			41-6-0										
5	S21	38-0	488	1			38-0-0										
5	S22	50-0	488	1			50-0-0										
4	P	5-2	406	23			2-4-0	0-2-0	2-4-0								
4	S	210-0	8	2			1-9-0	203-0-0								4	

LOCATION – SUPERSTRUCTURE (SPANS 6) REQUIRED 1

MARK SIZE	MARK DES.	LENGTH FT. IN.	NO. BARS	TYPE BAR	STYLE A	STYLE G	B FT. IN. FR.	C FT. IN. FR.	D FT. IN. FR.	E FT. IN. FR.	F FT. IN. FR.	G FT. IN. FR.	H FT. IN. FR.	J FT. IN. FR.	K FT. IN. FR.	N NO.	Ø ANG.
5	D01	13-1	220	7			6-0-0	0-5-0	0-4-0	0-4-0							
5	D02	10-3	40	7			4-7-0	0-5-0	0-4-0	0-4-0							
4	D03	125-3	12	2			1-9-0	120-0-0								2	
4	D04	10-11	80	1			10-11-0										
4	D05	9-2	40	1			9-2-0										
5	S01	47-6	488	1			47-6-0										
5	S03	7-4	244	17	1		6-9-0										
5	S06	40-0	128	1			40-0-0										
5	S08	103-6	259	2			2-0-0	101-6-0								1	
4	S12	1-9	136	32			0-9-0	0-6-0	0-6-0								
4	S13	18-6	68	1			18-6-0									1	
4	S19	105-0	13	2			1-9-0	101-6-0								2	
5	S20	41-6	488	1			41-6-0										
5	S21	38-0	244	1			38-0-0										
5	S22	50-0	244	1			50-0-0										
4	P	5-2	204	23			2-4-0	0-2-0	2-4-0								
4	S	104-10	8	2			1-9-0	101-4-0								2	

NOTE:
1. *5S02 AND 5S04 BARS NOT USED*
2. *See Index 1300.*

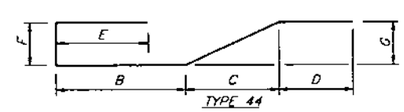

REVISIONS					
Date	By	Description	Date	By	Description

	Names	Dates
Drawn by	JLA/JJS	3/96
Checked by	MKA	3/96
Designed by	MKA	3/96
Checked by	PM	3/96
Approved by	Peeter Monnik, P.E.	

ENGINEER OF RECORD:
DYER, RIDDLE, MILLS AND PRECOURT, INC.
1506 EAST COLONIAL DRIVE
ORLANDO, FLORIDA 32803

LOGO: DRMP DYER, RIDDLE, MILLS & PRECOURT, INC. ENGINEERS · SURVEYORS

SEAL: Peeter Monnik 3/4/98

FLORIDA DEPARTMENT OF TRANSPORTATION
STRUCTURES DESIGN OFFICE

ROAD NO.	COUNTY	PROJECT NO.
SR414	SEMINOLE	77002-3503

SHEET TITLE: **REINFORCING BAR LIST**

PROJECT NAME: **MAITLAND BOULEVARD OVER LAKE BOSSE**

Drawing No. **3 OF 3**

Index No.

JA/JS04/07-97 05:26AM

TCDPW\LKBV\LKBRBL1.DWG

FED. ROAD DIV. NO.	STATE	PROJECT NO.	FISCAL YEAR	SHEET NO.
3	FLA.		98	C-1

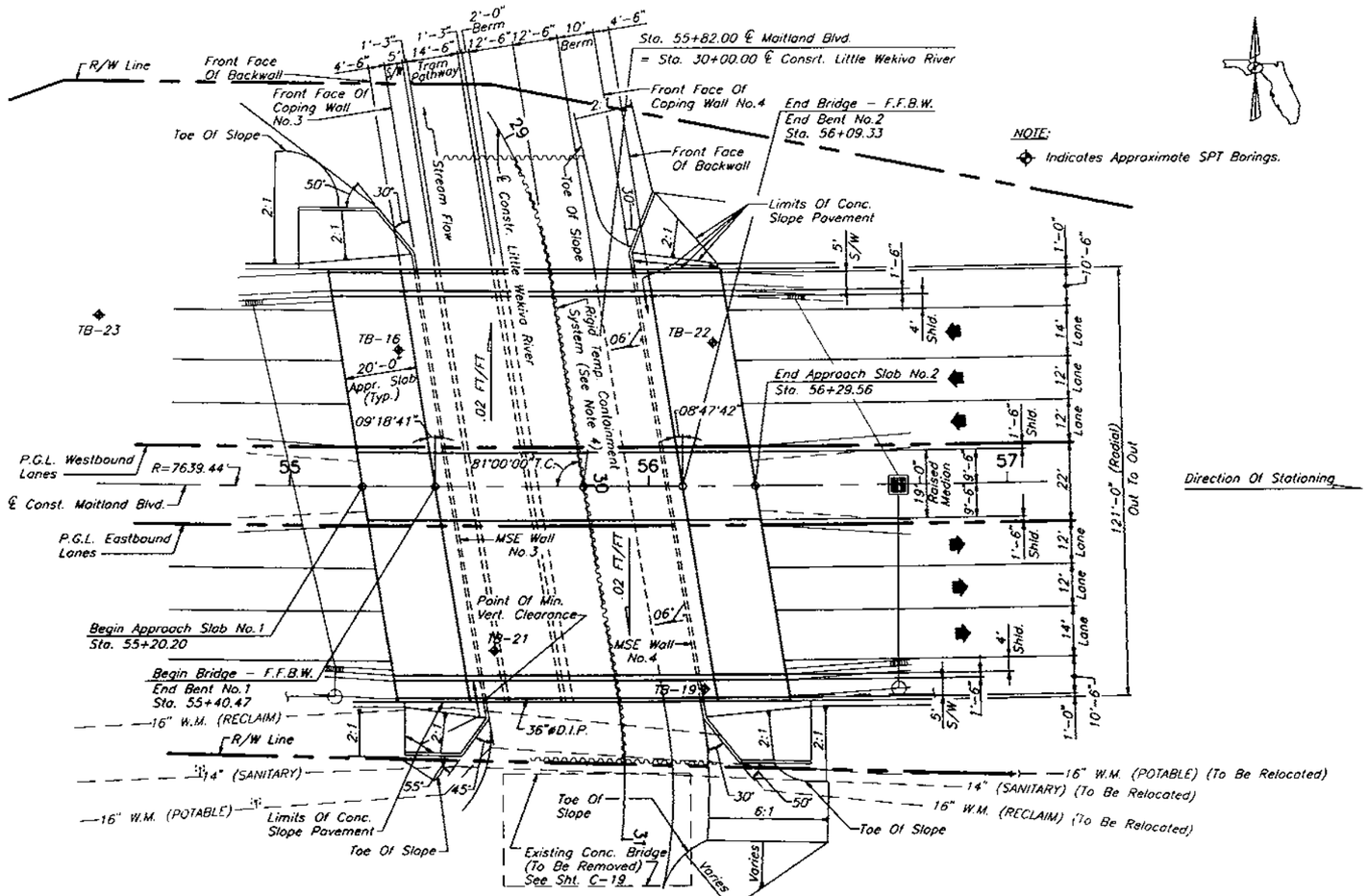

NOTE:
Indicates Approximate SPT Borings.

PLAN

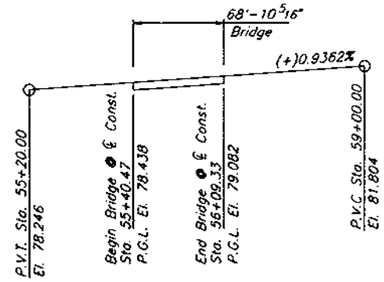

PROFILE GRADE MAITLAND BLVD.

TRAFFIC DATA MAITLAND BOULEVARD

EST. 1998 ADT 28,989
EST. 2008 ADT 31,961
EST. 2018 ADT 38,978
K = 9.0%
D = 55%
T = 5% (24 Hr.)
DESIGN SPEED = 45 MPH

CURVE DATA

P.I. STA. = 58+58.70
Δ = 07°11'22" LT.
D = 0°45'00"
T = 479.93'
L = 958.60'
R = 7639.44'
e = N/C
P.C. STA. = 53+78.77
P.R.C. STA. = 63+37.37

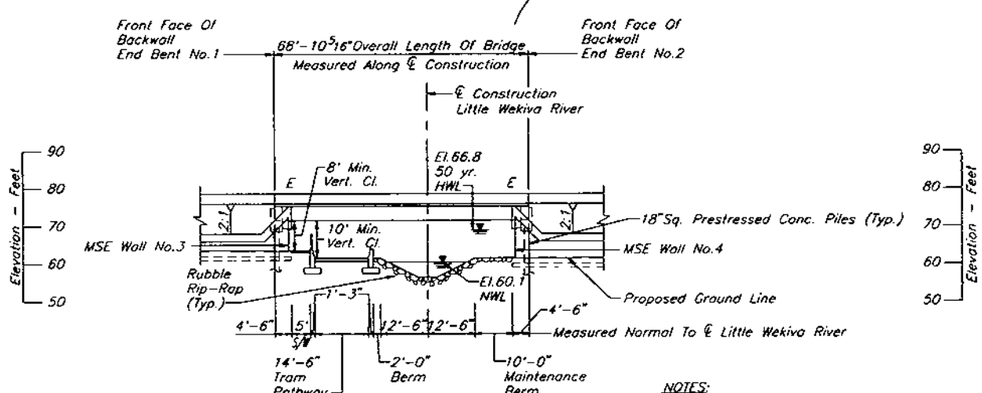

ELEVATION

NOTES:
1. 36" DIP Not Shown For Clarity.
2. Minimum Vertical Clear Measured To Bottom Of Pipe.
3. See Miscellaneous Details For Rubble Rip-Rap Limits And Details.
4. See Roadway Plans Sheets 36 & 37 For Tramway Section Details And Rigid Temporary Containment System Details.

REVISIONS					
Date	By	Description	Date	By	Description

	Names	Dates
Drawn by	JLA/JJS	3/96
Checked by	MKA	3/96
Designed by	MKA	3/96
Checked by	PM	3/96
Approved by	Peeter Mannik, P.E.	

ENGINEER OF RECORD:
DYER, RIDDLE, MILLS AND PRECOURT, INC.
1505 EAST COLONIAL DRIVE
ORLANDO, FLORIDA 32803

LOGO: DRMP DYER, RIDDLE, MILLS & PRECOURT, INC. ENGINEERS · SURVEYORS

SEAL: 3-4-96

FLORIDA DEPARTMENT OF TRANSPORTATION
STRUCTURES DESIGN OFFICE

ROAD NO.	COUNTY	PROJECT NO.
SR414	SEMINOLE	77002-3503

SHEET TITLE: GENERAL PLAN AND ELEVATION

PROJECT NAME: MAITLAND BOULEVARD OVER LITTLE WEKIVA RIVER BRIDGE NO. 770075

Drawing No.

Index No.

A/-S02/08/97 1:07PM M:\000BR\LWR\LWRGPE.DWG

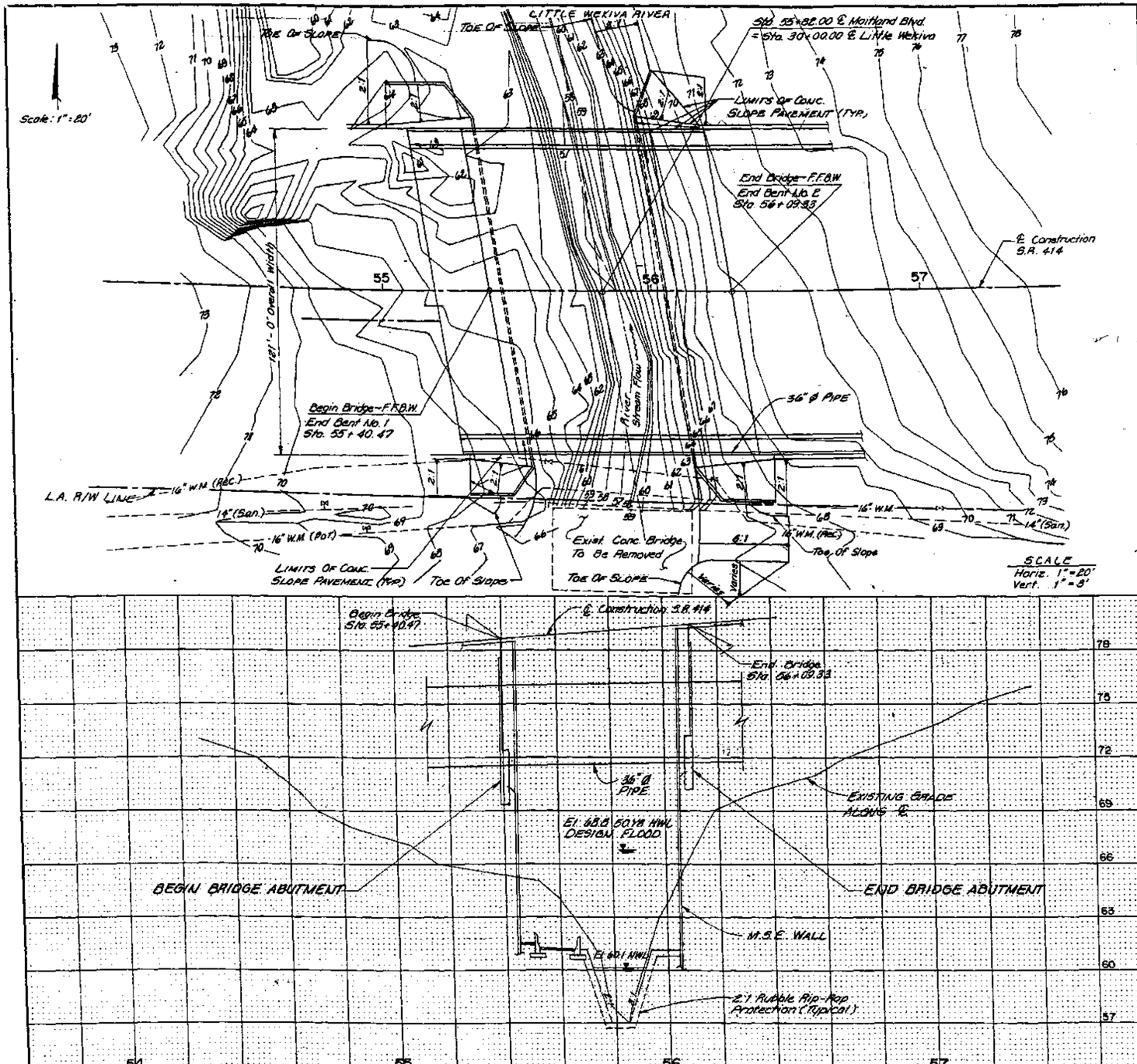

STATE PROJ. NO.	SHEET NO.
77002-3503	C-2

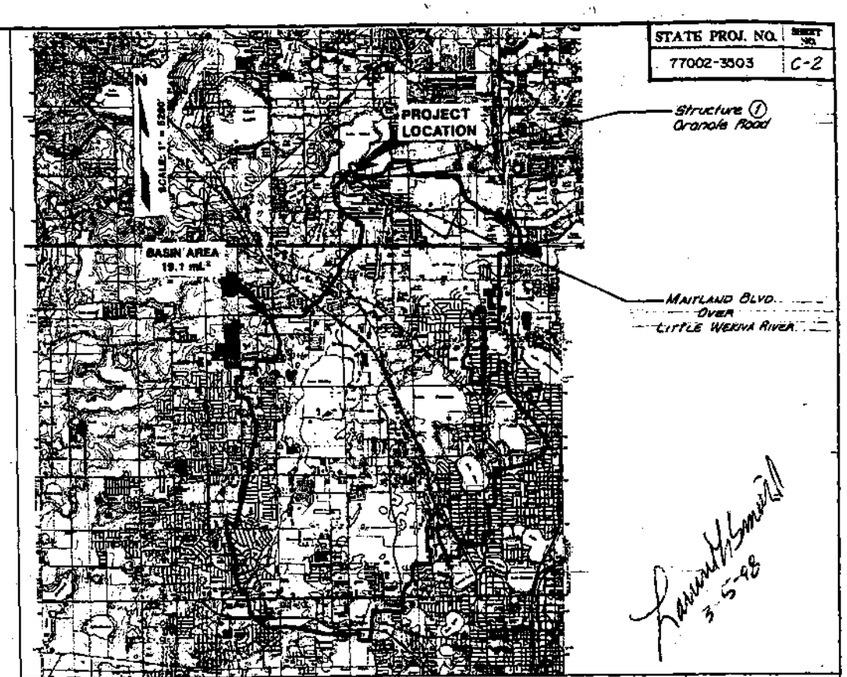

	EXISTING STRUCTURES (1)	(2)	(3)	(4)	ASSUMED CONFIGURATION
(REFERENCE)	18" Conc. Pile				18" Prestressed Conc. Piles
FOUNDATION	52'				60'-10 #16
OVERALL LENGTH	2@24'				60'-10 #16
SPAN LENGTH	Flat Slab				Prestressed Beams
TYPE CONSTRUCTION	0 ft²				248 ft²
AREA OF OPENING @ H.W.	30'				121'-0"
ROADWAY WIDTH	69.20				71.61
ELEV. LOW MEMBER					

HYDRAULIC DESIGN DATA

NOTE: The hydraulic data is shown for informational purposes only to indicate the flood discharges and water surface elevations which may be anticipated in any given year. This data was generated using highly variable factors determined by a study of the watershed. Many judgements and assumptions are required to establish these factors. The resultant hydraulic data is sensitive to changes, particularly antecedent conditions, urbanization, channelization and land use. Users of this data are cautioned against the assumption of precision which cannot be obtained.

DEFINITIONS:
Design Flood: The flood utilized to assure a desired level of hydraulic performance.
Base Flood: The flood having a 1% chance of being exceeded in any year. (100 Year Frequency)
Overtopping Flood: The flood which causes flow over the highway, over a watershed divide or thru emergency relief structures.
Greatest Flood: The most severe flood which can be predicted where overtopping is not practicable.

WATER SURFACE ELEVATIONS: N.H.W. (Non-Tidal) 60.1 M.H.W. N/A M.L.W. N/A

FLOOD DATA:	MAX. EVENT OF RECORD	DESIGN FLOOD	BASE FLOOD	☐ OVERTOPPING FLOOD ☒ GREATEST FLOOD
STAGE ELEV. NGVD (FT.)	Not Available	66.80	67.30	68.51
DISCHARGE (CFS)	Not Available	1290	1460	1800
AVERAGE VELOCITY (FPS)	Not Available	2.59	2.46	2.11
EXCEEDANCE PROB. (%)	Not Available	2.0%	1.0%	0.20%
FREQUENCY (YR.)	Not Available	50	100	500

HYDRAULIC RECOMMENDATIONS

1. BEGIN BRIDGE STATION 55+40.47 END BRIDGE STATION 56+09.33 SKEW ANGLE 9°
2. CHANNEL SECTION: ℄ STATION 55+82.00 BOTTOM WIDTH 9' ELEV. 57 SIDE SLOPE Vertical Walls
3. LIMITS OF CHANNEL EXCAVATION: RT. 56+10 LT. 55+40
4. CLEARANCE: NAVAGATION: HORIZ. N/A VERT. N/A ABOVE EL. N/A DRIFT: HORIZ. 56' VERT. 4.81 ABOVE EL. 66.80
5. SCOUR PREDICTION: Due To The Proposed Channel Protection, No Abutement Scour Is Predicted. Contraction Scour Estimates Are As Follows: Q(50 Yr) = 0.43 ft Q(100 Yr) = 1.09 ft Q(500 Yr) = 1.90 ft
6. SLOPE PROTECTION: Embankments To Be Protected By Rubble Rip-Rap.
7. DECK DRAINAGE: Runoff Will Be Directed, Via Curb And Gutter, Toward The Roadway Storm Sewer Systems At The West End Of The Structure.
8. OTHER: 36" DIP Will Be Attached To Southern Portion Of Bridge. Purpose Of The Pipe Is To Convey Stormwater.

REMARKS:

REVISIONS								
DATE	BY	DESCRIPTION	DATE	BY	DESCRIPTION	DATE	BY	DESCRIPTION

	NAME	DATE		NAME	DATE
DESIGNED BY	LLS	10-91	DRAWN BY	JJS	10-91
CHECKED BY	MKA	10-91	CHECKED BY	MKA	10-91
SUPERVISED BY: LARRY L. SMITH, P.E.					

FLORIDA DEPARTMENT OF TRANSPORTATION
APPROVED BY:
DATE:

BRIDGE HYDRAULIC RECOMMENDATIONS

FED. ROAD DIV. NO.	STATE	PROJECT NO.	FISCAL YEAR	SHEET NO.
	FLA.			C-3

SECTION: 21
TOWNSHIP: 21 SOUTH
RANGE: 29 EAST

0 30 60 120
SCALE IN FEET

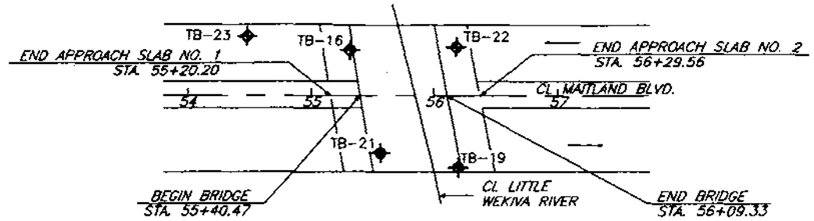

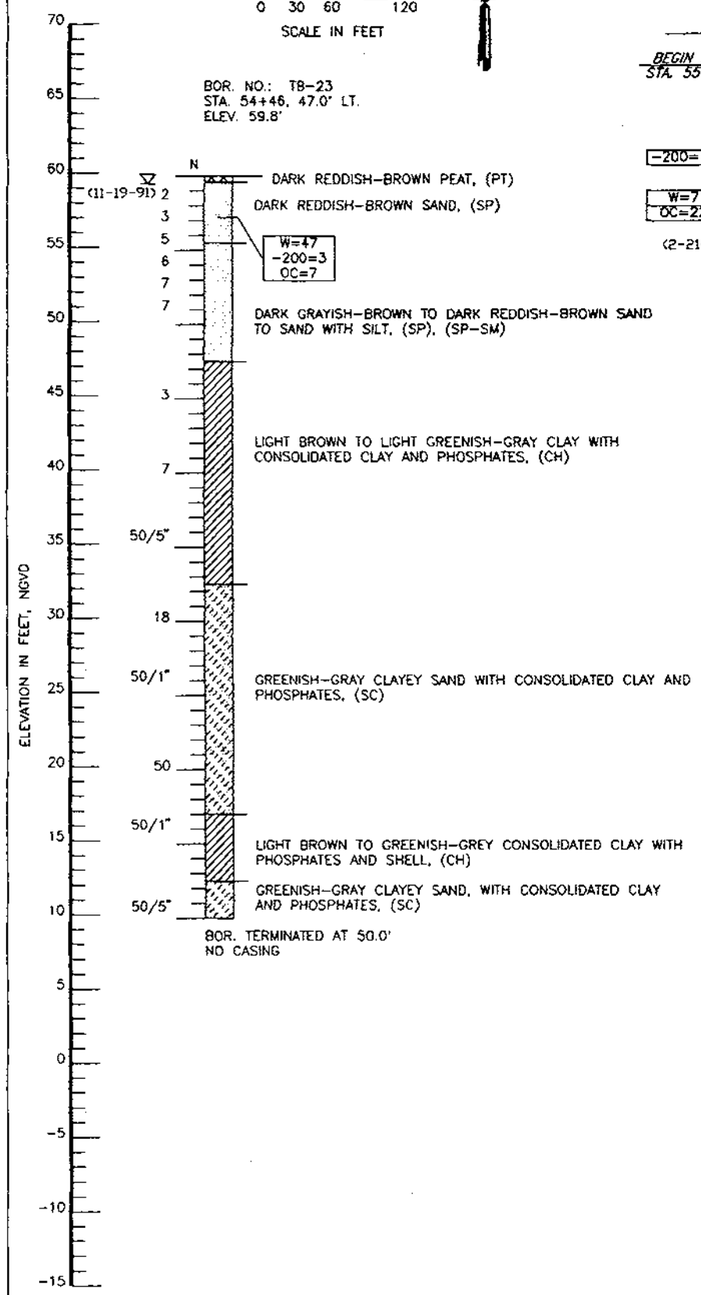

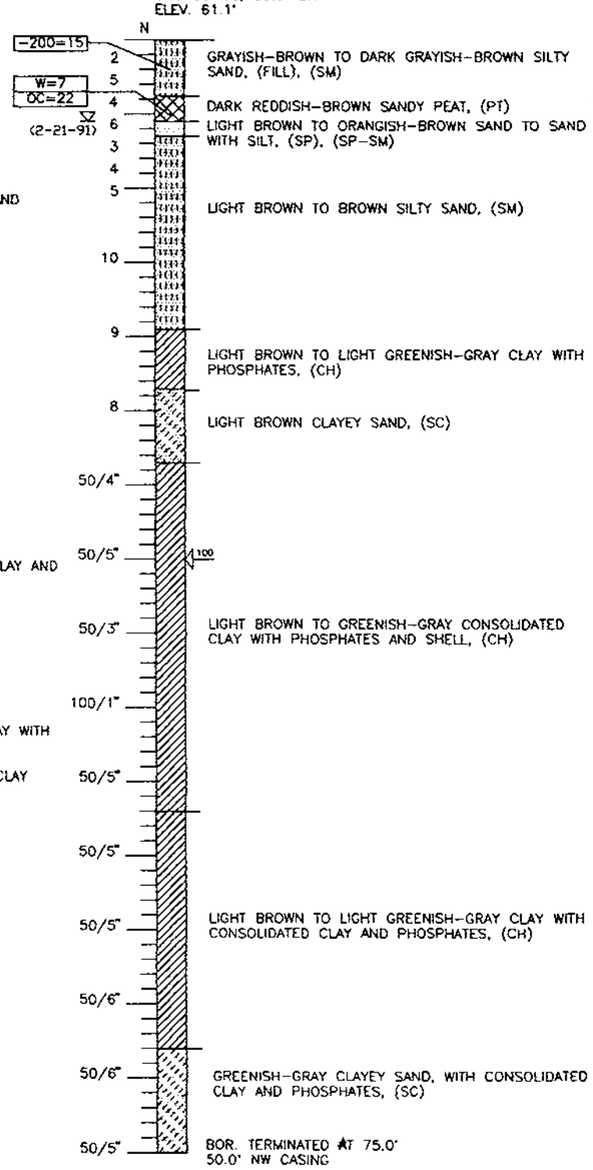

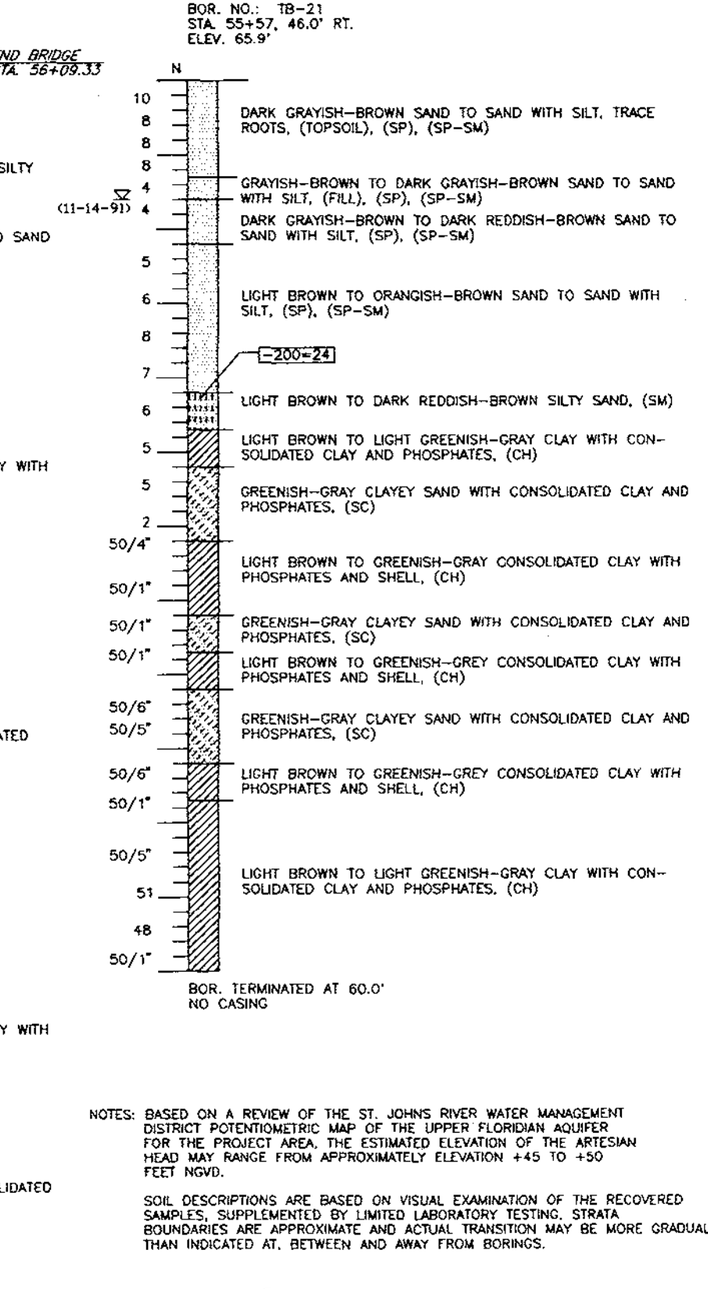

NOTES: BASED ON A REVIEW OF THE ST. JOHNS RIVER WATER MANAGEMENT DISTRICT POTENTIOMETRIC MAP OF THE UPPER FLORIDIAN AQUIFER FOR THE PROJECT AREA, THE ESTIMATED ELEVATION OF THE ARTESIAN HEAD MAY RANGE FROM APPROXIMATELY ELEVATION +45 TO +50 FEET NGVD.

SOIL DESCRIPTIONS ARE BASED ON VISUAL EXAMINATION OF THE RECOVERED SAMPLES, SUPPLEMENTED BY LIMITED LABORATORY TESTING. STRATA BOUNDARIES ARE APPROXIMATE AND ACTUAL TRANSITION MAY BE MORE GRADUAL THAN INDICATED AT, BETWEEN AND AWAY FROM BORINGS.

LEGEND

- MUCK/PEAT
- SAND
- SILTY SAND
- CLAY
- CLAYEY SAND
- (SP) UNIFIED SOIL CLASSIFICATION GROUP SYMBOL
- (11-14-91) WATER TABLE LEVEL (WITH DATE OF READING)
- N STANDARD PENETRATION RESISTANCE IN BLOWS PER FOOT, UNLESS OTHERWISE NOTED
- LOCATION OF STANDARD PENETRATION TEST BORING
- CIRCULATION LOSS (%)
- W=47, -200=3, OC=7: NATURAL MOISTURE CONTENT (%), FINES PASSING No. 200 SIEVE (%), ORGANIC CONTENT (%)

STANDARD PENETRATION TEST DATA

SPOON INSIDE DIA.	1 3/8 IN.
SPOON OUTSIDE DIA.	2 IN.
AVG. HAMMER DROP	30 IN.
HAMMER WEIGHT	140 LBS.

HAMMER TYPE: SAFETY HAMMER

GRANULAR MATERIALS

RELATIVE DENSITY	SPT (BLOWS/FT.)
VERY LOOSE	LESS THAN 4
LOOSE	4-10
MEDIUM DENSE	10-30
DENSE	30-50
VERY DENSE	GREATER THAN 50

SILTS AND CLAYS

CONSISTENCY	SPT (BLOWS/FT.)
VERY SOFT	LESS THAN 2
SOFT	2-4
FIRM	4-8
STIFF	8-15
VERY STIFF	15-30
HARD	GREATER THAN 30

ENVIRONMENTAL CLASSIFICATION:

SUPERSTRUCTURE: SLIGHTLY AGGRESSIVE

SUBSTRUCTURE:
CONCRETE: EXTREMELY AGGRESSIVE (pH=4.7)
STEEL: EXTREMELY AGGRESSIVE (pH=4.7)

REVISIONS

Date	By	Description	Date	By	Description

	Names	Dates
Drawn by	SEJ,II	12-18-91
Checked by	GK	12-18-91
Designed by	N/A	N/A
Checked by	N/A	N/A
Approved by	LPM	

ENGINEER OF RECORD:
LARRY P. MOORE, P.E. #47673
PSI
1675 LEE ROAD
WINTER PARK, FLORIDA 32789

LOGO: Environmental Geotechnical Construction
Consulting • Engineering • Testing

SEAL: 3-4-98

FLORIDA DEPARTMENT OF TRANSPORTATION
GEOTECHNICAL DESIGN OFFICE

ROAD NO.	COUNTY	PROJECT NO.
SR 414	SEMINOLE	77002-3503

SHEET TITLE: REPORT OF SPT BORINGS FOR STRUCTURE

PROJECT NAME: LITTLE WEKIVA RIVER BRIDGE
S.R. 414

Drawing No.

Index No.

PSI PROJECT No. 754-05260
FIGURE: 3

FED. ROAD DIV. NO.	STATE	PROJECT NO.	FISCAL YEAR	SHEET NO.
	FLA.			C-4

SECTION: 21
TOWNSHIP: 21 SOUTH
RANGE: 29 EAST

0 30 60 120
SCALE IN FEET

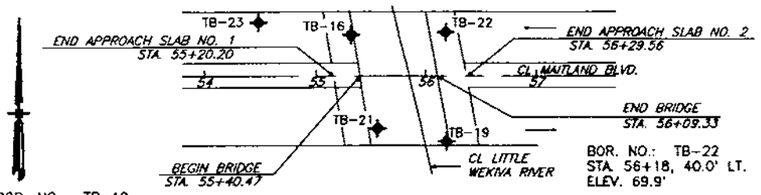

BOR. NO.: TB-19
STA. 56+15, 57.0' RT.
ELEV. 66.7'

BOR. NO.: TB-22
STA. 56+18, 40.0' LT.
ELEV. 69.9'

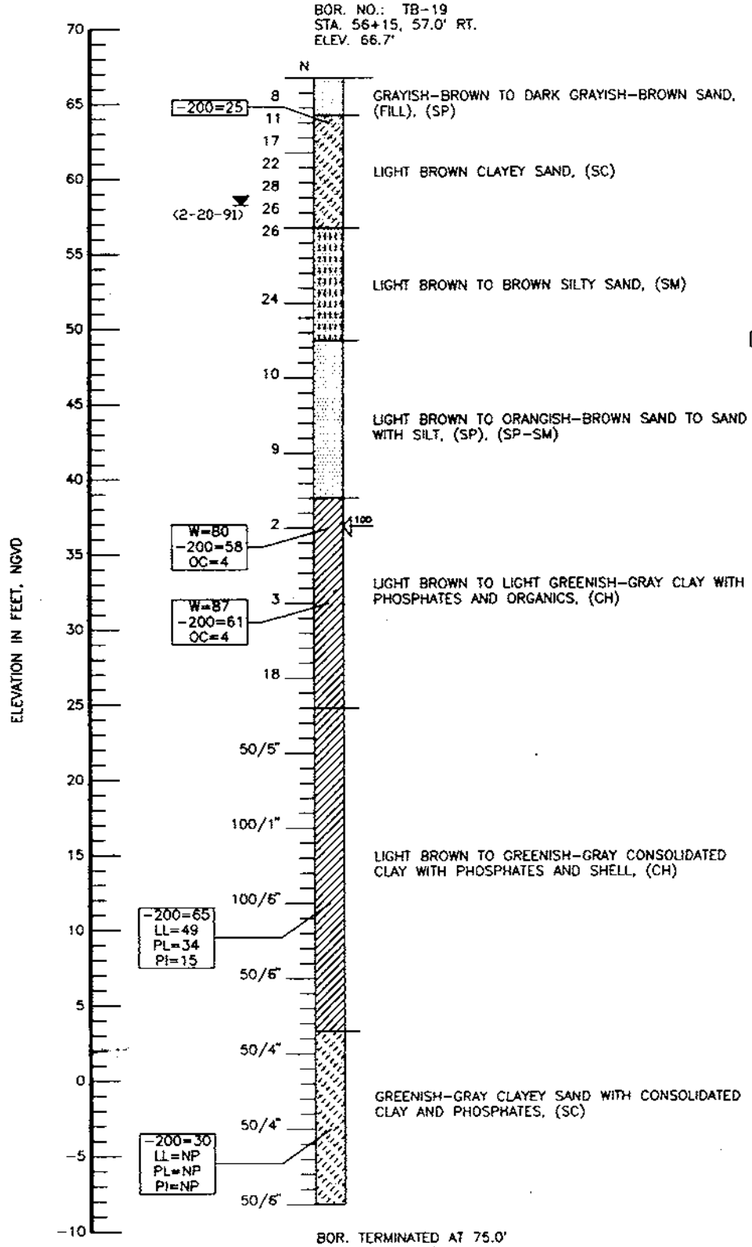

BOR. TERMINATED AT 75.0'
65.0' NW CASING

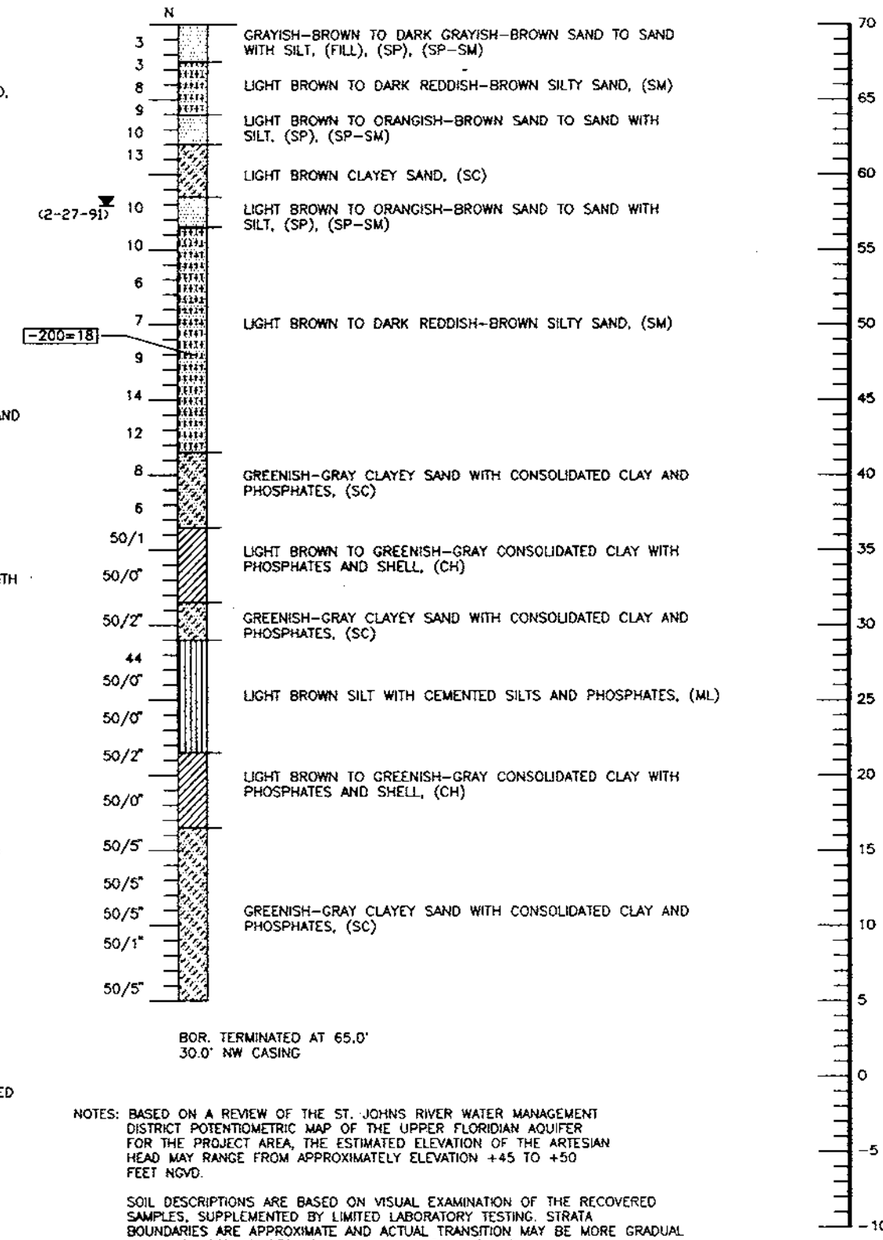

BOR. TERMINATED AT 65.0'
30.0' NW CASING

NOTES: BASED ON A REVIEW OF THE ST. JOHNS RIVER WATER MANAGEMENT DISTRICT POTENTIOMETRIC MAP OF THE UPPER FLORIDIAN AQUIFER FOR THE PROJECT AREA, THE ESTIMATED ELEVATION OF THE ARTESIAN HEAD MAY RANGE FROM APPROXIMATELY ELEVATION +45 TO +50 FEET NGVD.

SOIL DESCRIPTIONS ARE BASED ON VISUAL EXAMINATION OF THE RECOVERED SAMPLES, SUPPLEMENTED BY LIMITED LABORATORY TESTING. STRATA BOUNDARIES ARE APPROXIMATE AND ACTUAL TRANSITION MAY BE MORE GRADUAL THAN INDICATED AT, BETWEEN AND AWAY FROM BORINGS

LEGEND

- SAND
- SILTY SAND
- SILT
- CLAY
- CLAYEY SAND

(SP) UNIFIED SOIL CLASSIFICATION GROUP SYMBOL

2-20-91 ▼ WATER TABLE LEVEL (WITH DATE OF READING)

N STANDARD PENETRATION RESISTANCE IN BLOWS PER FOOT UNLESS OTHERWISE NOTED

⇦ CIRCULATION LOSS (%)

W=80	NATURAL MOISTURE CONTENT (%)
-200=58	FINES PASSING No. 200 SIEVE (%)
OC=4	ORGANIC CONTENT (%)
LL=34	LIQUID LIMIT
PL=34	PLASTIC LIMIT
PI=15	PLASTICITY INDEX

STANDARD PENETRATION TEST DATA

SPOON INSIDE DIA.	1 3/8 IN.
SPOON OUTSIDE DIA.	2 IN.
AVG. HAMMER DROP	30 IN.
HAMMER WEIGHT	140 LBS.

HAMMER TYPE: SAFETY

GRANULAR MATERIALS

RELATIVE DENSITY	SPT (BLOWS/FT.)
VERY LOOSE	LESS THAN 4
LOOSE	4-10
MEDIUM DENSE	10-30
DENSE	30-50
VERY DENSE	GREATER THAN 50

SILTS AND CLAYS

CONSISTENCY	SPT (BLOWS/FT.)
VERY SOFT	LESS THAN 2
SOFT	2-4
FIRM	4-8
STIFF	8-15
VERY STIFF	15-30
HARD	GREATER THAN 30

ENVIRONMENTAL CLASSIFICATION:

SUPERSTRUCTURE: SLIGHTLY AGGRESSIVE

SUBSTRUCTURE:
CONCRETE: EXTREMELY AGGRESSIVE (pH=4.7)
STEEL: EXTREMELY AGGRESSIVE (pH=4.7)

REVISIONS					
Date	By	Description	Date	By	Description

	Name	Date
Drawn by	SEJ,JI	12-27-91
Checked by	GK	12-27-91
Designed by	N/A	N/A
Checked by	N/A	N/A
Approved by	LPM	

ENGINEER OF RECORD:
LARRY P. MOORE, P.E. #47673
PSI
1675 LEE ROAD
WINTER PARK, FLORIDA 32789

LOGO: PSI Environmental Geotechnical Construction
Consulting • Engineering • Testing

SEAL: 3-4-98

FLORIDA DEPARTMENT OF TRANSPORTATION
GEOTECHNICAL DESIGN OFFICE

ROAD NO.	COUNTY	PROJECT NO.
SR 414	SEMINOLE	77002-3503

SHEET TITLE: REPORT OF SPT BORINGS FOR STRUCTURE

PROJECT NAME: LITTLE WEKIVA RIVER BRIDGE
S.R. 414

Drawing No.

Index No.

PSI PROJECT No. 754-05260
FIGURE: 4

FED. ROAD DIV. NO.	STATE	PROJECT NO.	FISCAL YEAR	SHEET NO.
3	FLA.		98	C-5

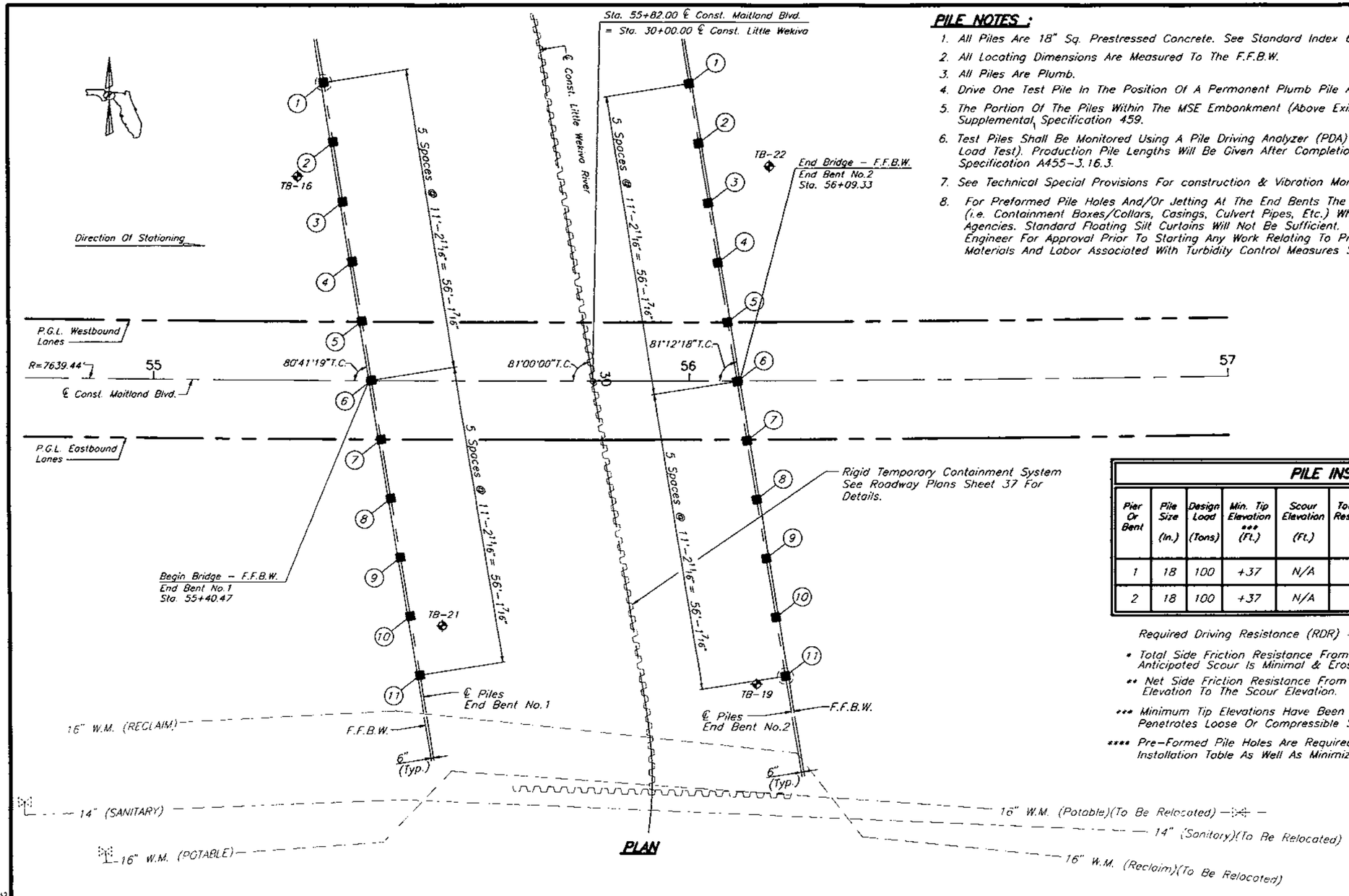

PLAN

PILE NOTES :

1. All Piles Are 18" Sq. Prestressed Concrete. See Standard Index 600 For Details.
2. All Locating Dimensions Are Measured To The F.F.B.W.
3. All Piles Are Plumb.
4. Drive One Test Pile In The Position Of A Permanent Plumb Pile At Each End Bent As Shown On The Foundation Layout Plan.
5. The Portion Of The Piles Within The MSE Embankment (Above Existing Grade) Shall Be Wrapped In Accordance With Supplemental Specification 459.
6. Test Piles Shall Be Monitored Using A Pile Driving Analyzer (PDA) And Will Be Paid For Under Bid Item 455-137 (Dynamic Load Test). Production Pile Lengths Will Be Given After Completion Of Test Piling In Accordance With Standard Specification A455-3.16.3.
7. See Technical Special Provisions For construction & Vibration Monitoring.
8. For Preformed Pile Holes And/Or Jetting At The End Bents The Contractor Shall Use Turbidity Control Measures (i.e. Containment Boxes/Collars, Casings, Culvert Pipes, Etc.) Which Satisfy The Minimum Requirements Of The Permitting Agencies. Standard Floating Silt Curtains Will Not Be Sufficient. The Contractor Shall Submit Turbidity Control Plan To The Engineer For Approval Prior To Starting Any Work Relating To Preformed Pile Holes And/or Pile Jetting. The Cost Of All Materials And Labor Associated With Turbidity Control Measures Shall Be Included With Bid Item No. 455-4-2, Pile Driven.

LEGEND

- (1) Pile Number
- ■ Proposed Piles
- (■) Test Pile
- ◆ Approximate SPT Boring

CURVE DATA

Δ = 07°11'22" Lt.
D = 00°45'00"
T = 479.93'
L = 958.60'
R = 7639.44'
P.C. Sta. = 53+78.77
P.R.C. Sta. = 63+37.37

PILE INSTALLATION TABLE

Pier Or Bent	Pile Size (In.)	Design Load (Tons)	Min. Tip Elevation *** (Ft.)	Scour Elevation (Ft.)	Total Scour Resistance * (Tons)	Total Down Drag (Tons)	Required Preform Elevation (Ft.) ****	Required Jet Elevation (Ft.)	Net Scour Resistance ** (Tons)	Test Pile Lengths (Ft.)
1	18	100	+37	N/A	N/A	50	+40	N/A	N/A	70
2	18	100	+37	N/A	N/A	50	+40	N/A	N/A	70

Required Driving Resistance (RDR) = (Design Load x F.S.) + (Down Drag) + (Scour Resistance)

* Total Side Friction Resistance From Ground Line To The Scour Elevation. For This Project Anticipated Scour Is Minimal & Erosion Protection Provided, Therefore Scour Is Neglected.

** Net Side Friction Resistance From The Required Preformed Or Jetting Elevation To The Scour Elevation.

*** Minimum Tip Elevations Have Been Established To Ensure The Pile Tip Penetrates Loose Or Compressible Soil Zones And Bears In Competent Material.

**** Pre-Formed Pile Holes Are Required To Reduce Downdrag To The Level In The Pile Installation Table As Well As Minimize Vibrations To Nearby Structures. See Note 8.

PILE CUTOFF ELEVATIONS

PILE NO.	LOCATION	
	END BENT NO.1	END BENT NO.2
1	69.7	70.3
2	69.9	70.6
3	70.1	70.8
4	70.4	71.0
5	70.6	71.3
6	70.8	71.5
7	70.5	71.3
8	70.2	71.1
9	69.9	70.8
10	69.6	70.6
11	69.3	70.4

REVISIONS

Date	By	Description	Date	By	Description

	Names	Dates
Drawn by	JLA/JJS	3/96
Checked by	MKA	3/96
Designed by	MKA	3/96
Checked by	PM	3/96
Approved by	Peeter Mannik, P.E.	

ENGINEER OF RECORD:
DYER, RIDDLE, MILLS AND PRECOURT, INC.
1608 EAST COLONIAL DRIVE
ORLANDO, FLORIDA 32803

LOGO: DRMP DYER, RIDDLE, MILLS & PRECOURT, INC. ENGINEERS · SURVEYORS

SEAL: 3/4/98

FLORIDA DEPARTMENT OF TRANSPORTATION
STRUCTURES DESIGN OFFICE

ROAD NO.	COUNTY	PROJECT NO.
SR414	SEMINOLE	77002-3503

SHEET TITLE: FOUNDATION LAYOUT

PROJECT NAME: MAITLAND BOULEVARD OVER LITTLE WEKIVA RIVER

Drawing No.

Index No.

A:\5504/17/97 07:23AM M:\OODBP\LWR_WRFND.DWG

FED. ROAD DIV. NO.	STATE	PROJECT NO.	FISCAL YEAR	SHEET NO.
3	FLA.		98	C-6

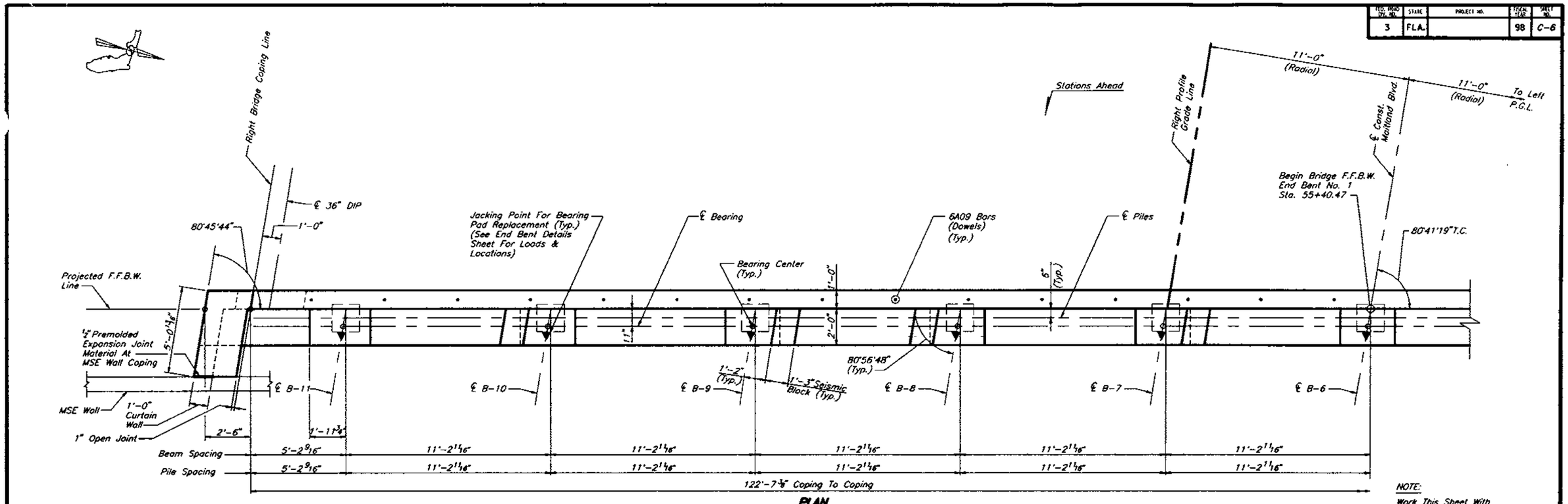

NOTE:
Work This Sheet With End Bent No.1, Sheet 2 Of 2, And End Bent Detail Sheet.

REVISIONS					
Date	By	Description	Date	By	Description

	Names	Dates
Drawn by	JLA/JJS	3/96
Checked by	MKA	3/96
Designed by	MKA	3/96
Checked by	PM	3/96
Approved by	Peeter Monnik, P.E.	

ENGINEER OF RECORD:
DYER, RIDDLE, MILLS AND PRECOURT, INC.
3505 EAST COLONIAL DRIVE ORLANDO, FLORIDA 32803

LOGO: DRMP DYER, RIDDLE, MILLS & PRECOURT, INC. ENGINEERS · SURVEYORS

SEAL: Peeter Monnik 3/9/98

FLORIDA DEPARTMENT OF TRANSPORTATION
STRUCTURES DESIGN OFFICE

ROAD NO.	COUNTY	PROJECT NO.
SR414	SEMINOLE	77002-3503

SHEET TITLE: **END BENT NO. 1**

PROJECT NAME: **MAITLAND BOULEVARD OVER LITTLE WEKIVA RIVER**

Drawing No. **1 OF 2**

Index No.

JA/JS02/08/97 1:10PM

200BPA\LWP\LWREB1-1.DWG

FED. ROAD DIV. NO.	STATE	PROJECT NO.	FISCAL YEAR	SHEET NO.
3	FLA.		98	C-7

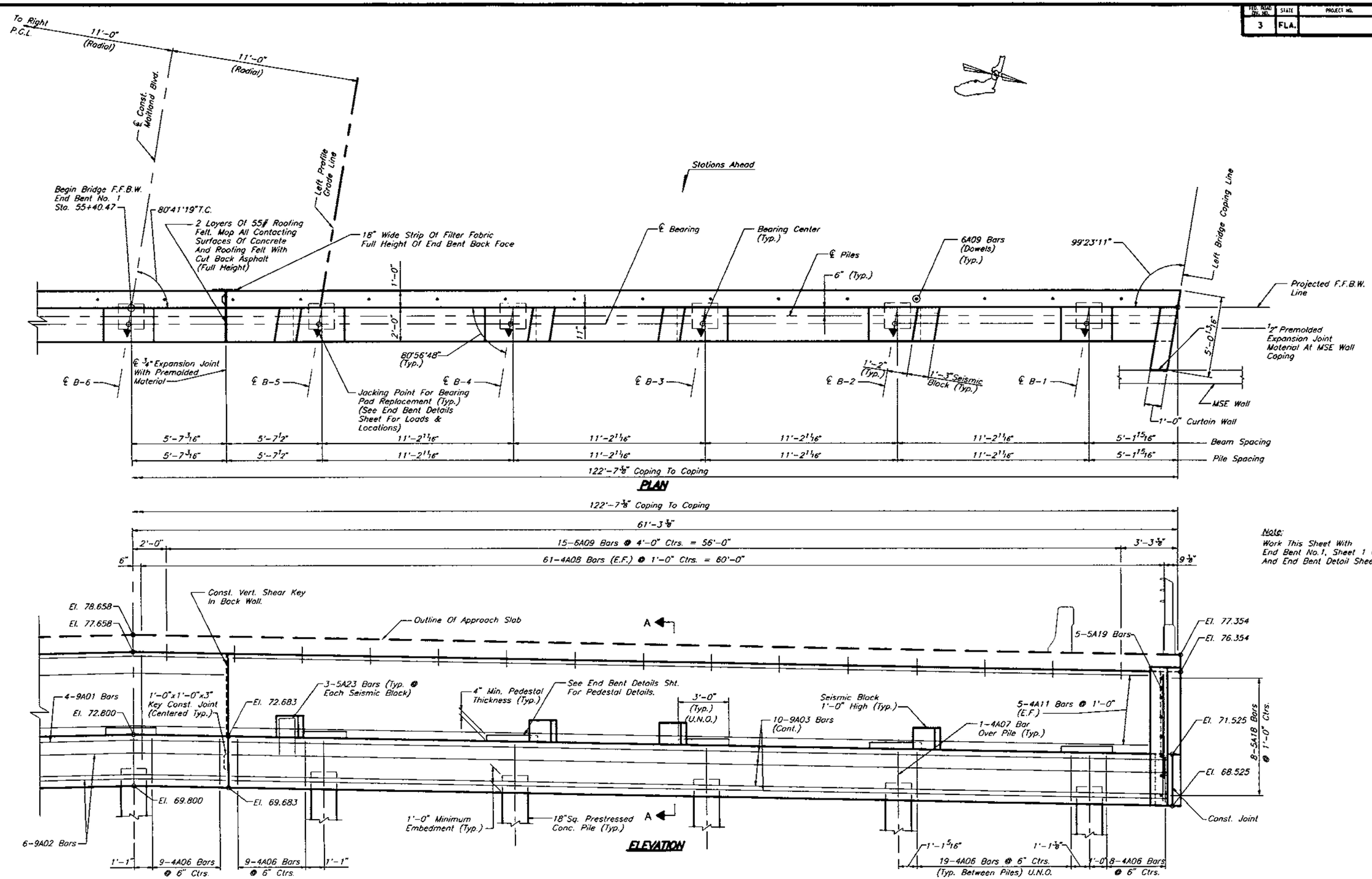

Note:
Work This Sheet With End Bent No.1, Sheet 1 Of 2, And End Bent Detail Sheet.

REVISIONS					
Date	By	Description	Date	By	Description

	Names	Dates
Drawn by	JLA/JJS	3/96
Checked by	MKA	3/96
Designed by	MKA	3/96
Checked by	PM	3/96
Approved by	Peeter Mannik, P.E.	

ENGINEER OF RECORD:
DYER, RIDDLE, MILLS AND PRECOURT, INC.
1605 EAST COLONIAL DRIVE
ORLANDO, FLORIDA 32803

LOGO: DRMP — DYER, RIDDLE, MILLS & PRECOURT, INC. ENGINEERS · SURVEYORS

SEAL: Peeter Mannik 3/4/98

FLORIDA DEPARTMENT OF TRANSPORTATION
STRUCTURES DESIGN OFFICE

ROAD NO.	COUNTY	PROJECT NO.
SR414	SEMINOLE	77002-3503

SHEET TITLE: **END BENT NO. 1**

PROJECT NAME: **MAITLAND BOULEVARD OVER LITTLE WEKIVA RIVER**

Drawing No. **2 OF 2**

Index No.

A:\JSC2/08/97 1:11PM M:\0005R\LWR\LWREB1-2.DWG

FED. ROAD DIV. NO.	STATE	PROJECT NO.	FISCAL YEAR	SHEET NO.
3	FLA.		98	C-8

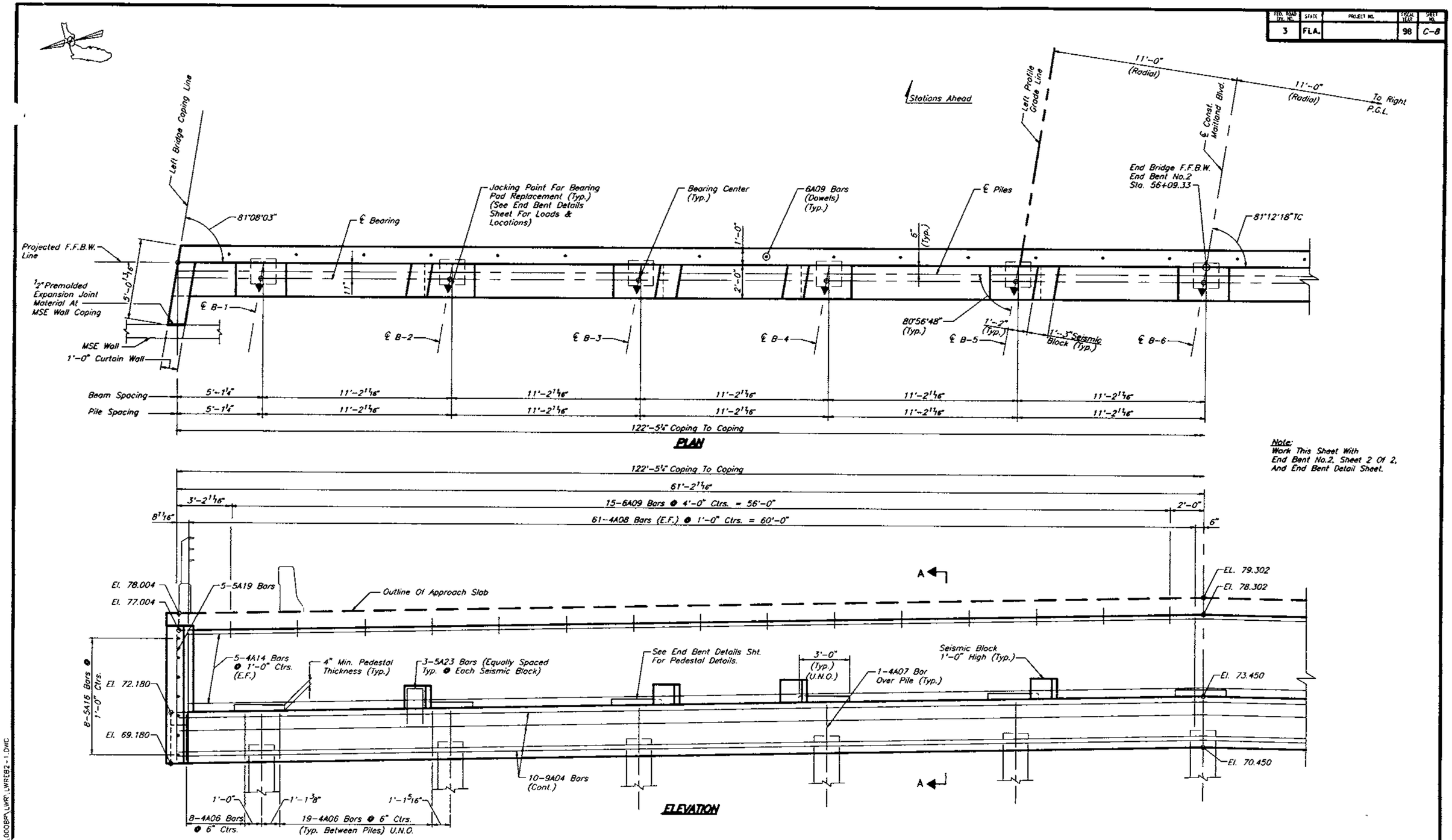

Note:
Work This Sheet With End Bent No.2, Sheet 2 Of 2, And End Bent Detail Sheet.

REVISIONS					
Date	By	Description	Date	By	Description

	Names	Dates
Drawn by	JLA/JJS	3/96
Checked by	MKA	3/96
Designed by	MKA	3/96
Checked by	PM	3/96
Approved by	Peeter Mannik, P.E.	

ENGINEER OF RECORD:
DYER, RIDDLE, MILLS AND PRECOURT, INC.
1505 EAST COLONIAL DRIVE
ORLANDO, FLORIDA 32803

LOGO: DRMP — DYER, RIDDLE, MILLS & PRECOURT, INC. ENGINEERS · SURVEYORS

SEAL: Peeter Mannik 3/4/98

FLORIDA DEPARTMENT OF TRANSPORTATION
STRUCTURES DESIGN OFFICE

ROAD NO.	COUNTY	PROJECT NO.
SR414	SEMINOLE	77002-3503

SHEET TITLE: **END BENT NO. 2**

PROJECT NAME: **MAITLAND BOULEVARD OVER LITTLE WEKIVA RIVER**

Drawing No. **1 OF 2**

Index No.

JA/JS02/08/97 1:12PM J:\0008PR\LWR\LWRE82-1.DWG

FED. ROAD DIV. NO.	STATE	PROJECT NO.	FISCAL YEAR	SHEET NO.
3	FLA.		98	C-9

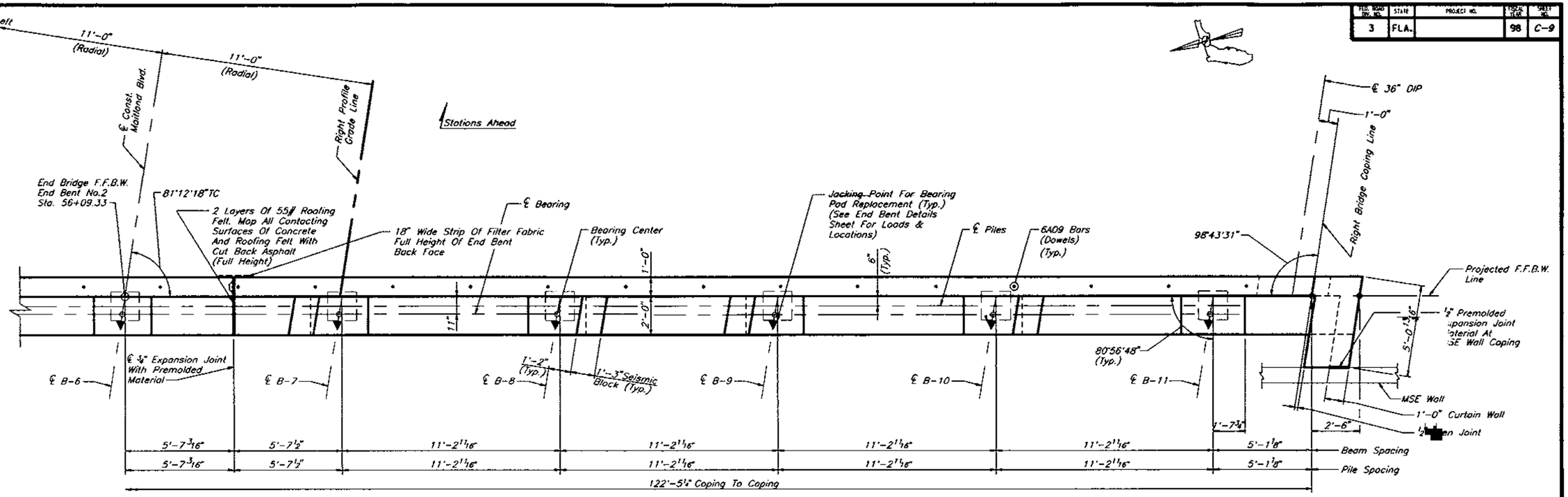

PLAN

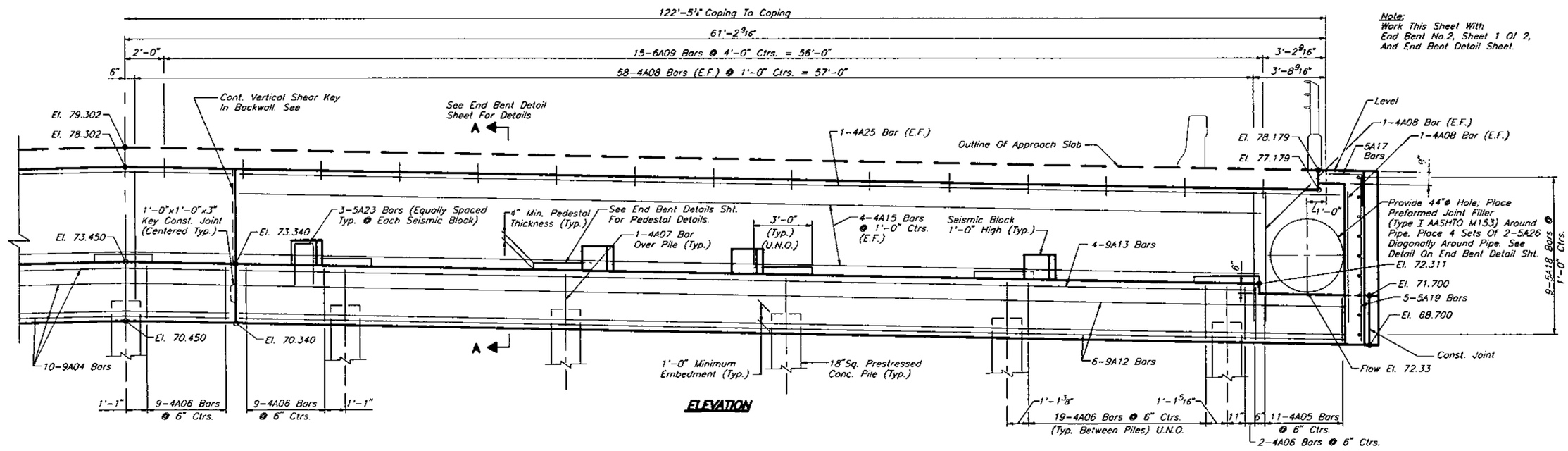

ELEVATION

REVISIONS					
Date	By	Description	Date	By	Description

	Names	Dates
Drawn by	JLA/JJS	3/96
Checked by	MKA	3/96
Designed by	MKA	3/96
Checked by	PM	3/96
Approved by	Peeter Mannik, P.E.	

ENGINEER OF RECORD:
DYER, RIDDLE, MILLS AND PRECOURT, INC.
1506 EAST COLONIAL DRIVE
ORLANDO, FLORIDA 32803

LOGO: DRMP — DYER, RIDDLE, MILLS & PRECOURT, INC. ENGINEERS · SURVEYORS

SEAL: Peeter Mannik 3/9/98

FLORIDA DEPARTMENT OF TRANSPORTATION
STRUCTURES DESIGN OFFICE

ROAD NO.	COUNTY	PROJECT NO.
SR414	SEMINOLE	77002-3503

SHEET TITLE: **END BENT NO. 2**

PROJECT NAME: **MAITLAND BOULEVARD OVER LITTLE WEKIVA RIVER**

Drawing No. **2 OF 2**

Index No.

JAY/SSP/08-97 1:13PM M:\DOOBPV\WRK\WREB2-2.DWG

FED. ROAD DIV. NO.	STATE	PROJECT NO.	FISCAL YEAR	SHEET NO.
3	FLA.		98	C-10

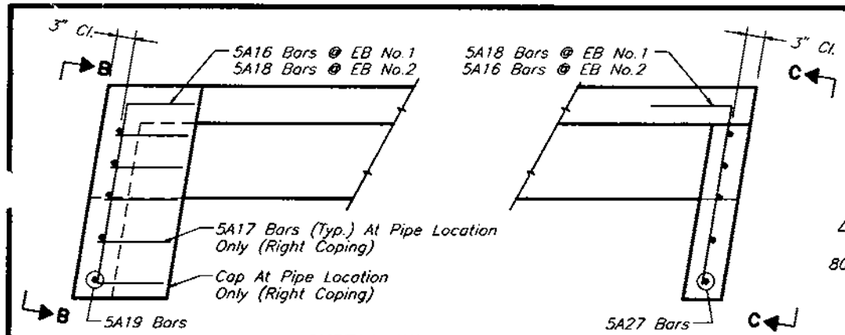

CURTAIN WALL DETAILS

End Bent No.1 Shown
End Bent No.2 Opposite Hand

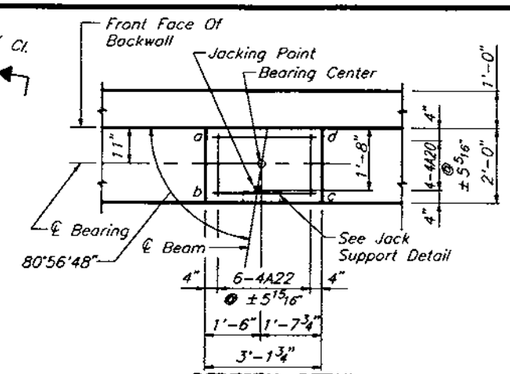

PEDESTAL DETAIL

AT BEAM B-11 ONLY
END BENT NO.2 SHOWN

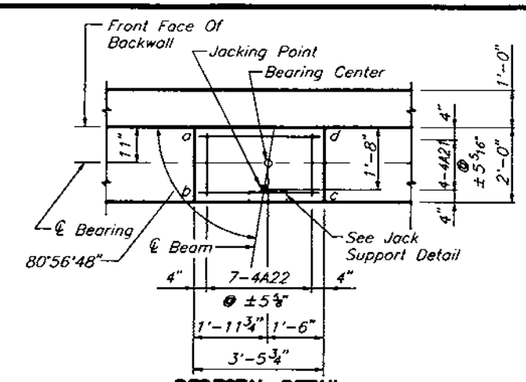

PEDESTAL DETAIL

AT BEAM B-11 ONLY
END BENT NO.1 SHOWN

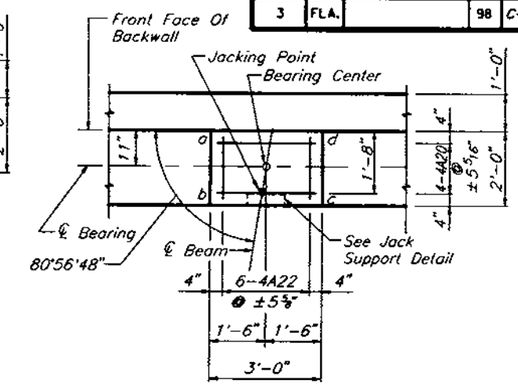

PEDESTAL DETAIL

NOTE:
Points a,b,c And d Refer To The Pedestal Corner Elevations.

UNFACTORED JACKING LOADS		
DEAD LOAD (TONS)	LIVE LOAD + IMPACT (TONS)	TOTAL (TONS)
48	29	77

Jacks Should Be Equipped To Lift Each End Of The Span Simultaneously. For Additional Jacking Notes See General Notes Sheet A-2.
Loads Are Given Per Jack.

PEDESTAL ELEVATIONS

	END BENT NO. 1				END BENT NO. 2			
BEAM	a	b	c	d	a	b	c	d
B-1	72.009	72.027	72.023	72.005	72.651	72.634	72.638	72.656
B-2	72.247	72.265	72.261	72.243	72.889	72.872	72.876	72.894
B-3	72.486	72.504	72.500	72.482	73.127	73.110	73.114	73.132
B-4	72.725	72.743	72.739	72.721	73.365	73.348	73.352	73.370
B-5	72.963	72.981	72.977	72.959	73.603	73.586	73.590	73.608
B-6	73.202	73.220	73.216	73.198	73.841	73.824	73.828	73.846
B-7	72.997	73.015	73.011	72.993	73.636	73.619	73.623	73.641
B-8	72.793	72.811	72.807	72.789	73.430	73.413	73.417	73.435
B-9	72.588	72.606	72.602	72.584	73.224	73.207	73.211	73.229
B-10	72.383	72.401	72.397	72.379	73.018	73.001	73.005	73.023
B-11	72.176	72.176	72.192	72.174	72.812	72.795	72.815	72.815

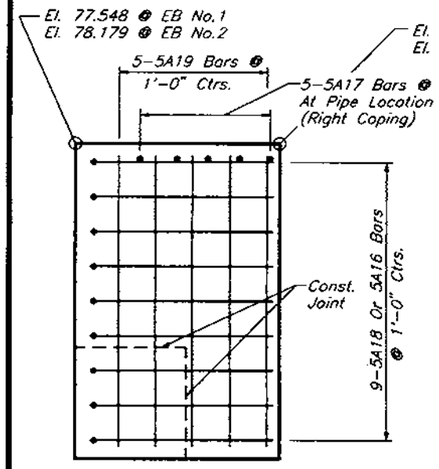

VIEW B-B

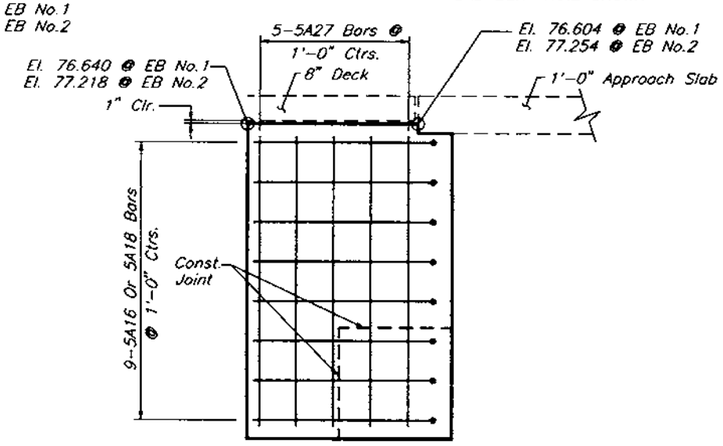

VIEW C-C

NOTES:
1. Work This Sheet With End Bent Sheets.
2. Soil Reinforcing Straps Are To Resist A Lateral Force Of 2.5 Kips Per Foot Of Backwall @ 3'-6" Measured From The Bottom Of The End Bent Cap.
3. Payment For The Jack Support Shall Be Included In The Cost Of Class IV Substructure Concrete.

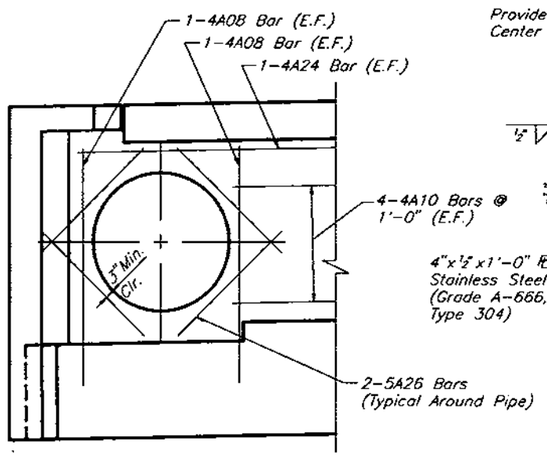

END BENT DETAIL AT PIPE

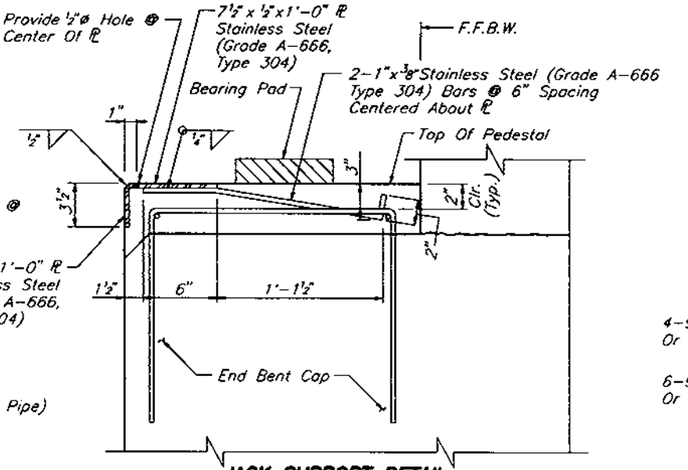

JACK SUPPORT DETAIL

TYPICAL @ EACH PEDESTAL

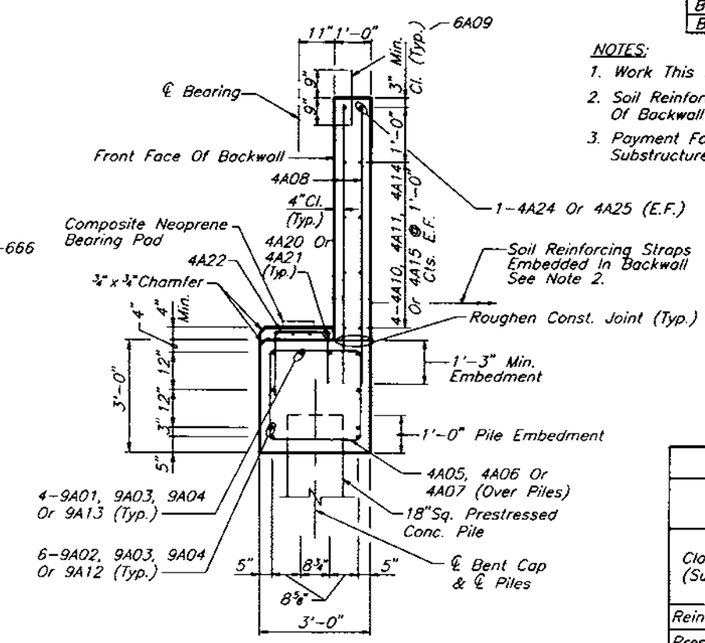

SECTION A-A

ESTIMATED QUANTITIES

ITEM		UNIT	QUANTITY End Bent 1	QUANTITY End Bent 2
Class II Concrete (Substructure)	Pedestals	C.Y.	1.1	1.0
	Cap		65.8	65.5
	Total		66.9	66.5
Reinforcing Steel (Substructure)		LB.	8,231	8,163
Prestressed Concrete Piles (18"Sq.)		FT.	*	

* See CES (Summary Of Bridge Pay Items)

REVISIONS					
Date	By	Description	Date	By	Description

	Names	Dates
Drawn by	JLA/JJS	3/96
Checked by	MKA	3/96
Designed by	MKA	3/96
Checked by	PM	3/96
Approved by	Peeter Monnik, P.E.	

ENGINEER OF RECORD:
DYER, RIDDLE, MILLS AND PRECOURT, INC.
1905 EAST COLONIAL DRIVE
ORLANDO, FLORIDA 32803

LOGO: DRMP

SEAL: Peeter Monnik 3/4/98

FLORIDA DEPARTMENT OF TRANSPORTATION
STRUCTURES DESIGN OFFICE

ROAD NO.	COUNTY	PROJECT NO.
SR414	SEMINOLE	77002-3503

SHEET TITLE: END BENT DETAILS

PROJECT NAME: MAITLAND BOULEVARD OVER LITTLE WEKIVA RIVER

Drawing No.

Index No.

JA/VS02/08/97 1:13PM M:\0008R\LWR\LWREBDT.DWG

FED. ROAD DIV. NO.	STATE	PROJECT NO.	FISCAL YEAR	SHEET NO.
3	FLA.		98	C-17

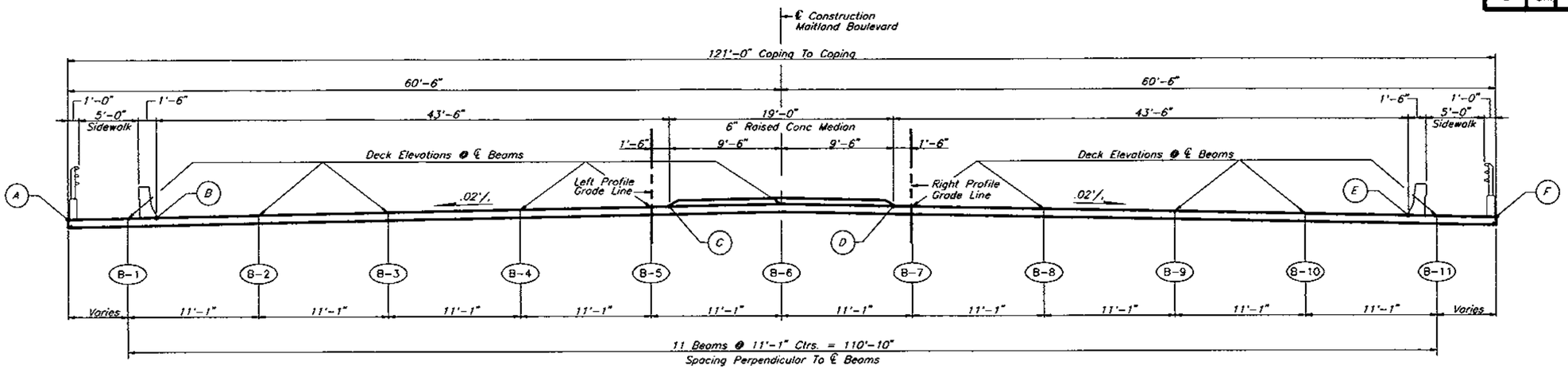

TYPICAL SECTION

Looking Up Station
(Radial)

NOTE:
Increment Lines Are Measured Along ℄ Girders And Are Projected To The Coping Line, Gutter Line, Profile Grade Line And Centerline Construction.

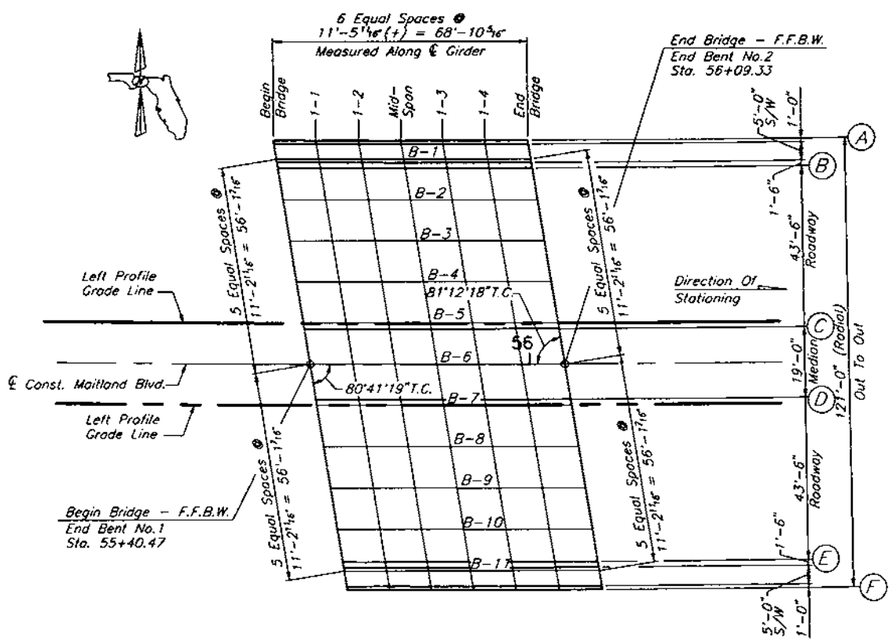

FRAMING PLAN & ROADWAY SURFACE ELEVATION GRID

DECK ELEVATIONS

LOCATION	BEGIN BRIDGE	1-1	1-2	MID-SPAN	1-3	1-4	END BRIDGE
(A) LEFT COPING LINE	77.354	77.462	77.571	77.679	77.787	77.896	78.004
B-1	77.465	77.572	77.679	77.787	77.895	78.004	78.112
(B) LEFT GUTTER LINE	77.516	77.624	77.732	77.840	77.949	78.057	78.165
B-2	77.703	77.810	77.918	78.025	78.133	78.242	78.350
B-3	77.942	78.049	78.156	78.264	78.372	78.480	78.588
B-4	78.181	78.287	78.394	78.502	78.610	78.718	78.826
B-5	78.419	78.526	78.633	78.740	78.848	78.956	79.064
LT. P.G.L.	78.421	78.528	78.636	78.744	78.851	78.959	79.066
(C) L.M. GUTTER LINE	78.453	78.561	78.668	78.776	78.883	78.991	79.099
B-6	78.658	78.764	78.871	78.978	79.086	79.194	79.302
℄ MAITLAND BLVD.	78.658	78.765	78.873	78.980	79.087	79.195	79.302
(D) R.M. GUTTER LINE	78.482	78.590	78.697	78.804	78.912	79.019	79.126
RT. P.G.L.	78.454	78.562	78.669	78.776	78.884	78.991	79.098
B-7	78.453	78.561	78.669	78.776	78.883	78.990	79.097
B-8	78.249	78.356	78.464	78.571	78.678	78.785	78.891
B-9	78.044	78.152	78.259	78.366	78.473	78.579	78.685
B-10	77.839	77.947	78.054	78.161	78.267	78.373	78.479
(E) RIGHT GUTTER LINE	77.678	77.785	77.892	77.999	78.105	78.212	78.319
B-11	77.634	77.742	77.849	77.955	78.061	78.167	78.273
(F) RIGHT COPING LINE	77.540	77.646	77.753	77.860	77.966	78.073	78.179

REVISIONS

Date	By	Description	Date	By	Description

	Names	Dates
Drawn by	JLA/JJS	3/96
Checked by	MKA	3/96
Designed by	MKA	3/96
Checked by	PM	3/96
Approved by	Peeter Mannik, P.E.	

ENGINEER OF RECORD:
DYER, RIDDLE, MILLS AND PRECOURT, INC.
1806 EAST COLONIAL DRIVE
ORLANDO, FLORIDA 32803

LOGO: DRMP DYER, RIDDLE, MILLS & PRECOURT, INC. ENGINEERS · SURVEYORS

SEAL: Peeter Mannik 3/4/98

FLORIDA DEPARTMENT OF TRANSPORTATION
STRUCTURES DESIGN OFFICE

ROAD NO.	COUNTY	PROJECT NO.
SR414	SEMINOLE	77002-3503

SHEET TITLE: FINISH GRADE ELEVATIONS

PROJECT NAME: MAITLAND BOULEVARD OVER LITTLE WEKIVA RIVER

Drawing No.

Index No.

JAN-30-1997 4:10PM M:\0003P\LWR\LWRFGE.DWG

FED. ROAD DIV. NO.	STATE	PROJECT NO.	FISCAL YEAR	SHEET NO.
3	FLA.		98	C-12

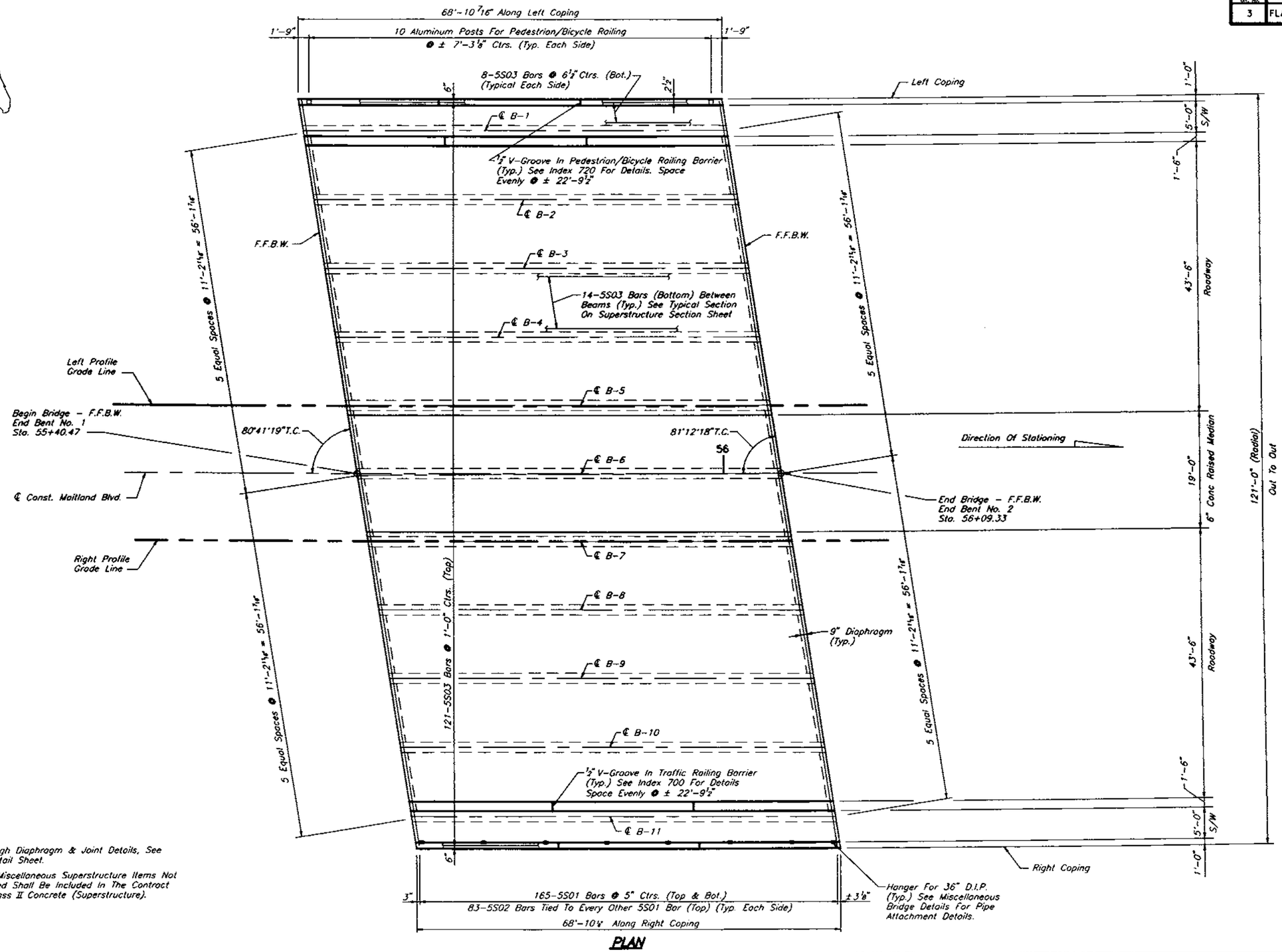

PLAN

NOTES:

1. For Section Through Diaphragm & Joint Details, See Superstructure Detail Sheet.
2. Payment For All Miscellaneous Superstructure Items Not Specifically Covered Shall Be Included In The Contract Unit Price For Class II Concrete (Superstructure).

REVISIONS					
Date	By	Description	Date	By	Description

	Notes	Dates
Drawn by	JLA/JJS	3/96
Checked by	MKA	3/96
Designed by	MKA	3/96
Checked by	PM	3/96
Approved by	Peeter Mannik, P.E.	

ENGINEER OF RECORD:
DYER, RIDDLE, MILLS AND PRECOURT, INC.
1605 EAST COLONIAL DRIVE
ORLANDO, FLORIDA 32803

LOGO: DRMP

SEAL: 3/4/98

FLORIDA DEPARTMENT OF TRANSPORTATION
STRUCTURES DESIGN OFFICE

ROAD NO.	COUNTY	PROJECT NO.
SR414	SEMINOLE	77002-3503

SHEET TITLE: SUPERSTRUCTURE PLAN

PROJECT NAME: MAITLAND BOULEVARD OVER LITTLE WEKIVA RIVER

Drawing No.

Index No.

JA/JS02/08/97 1:14PM M:\0008R\LWR\LWRSSP.DWG

FED. ROAD DIV. NO.	STATE	PROJECT NO.	FISCAL YEAR	SHEET NO.
3	FLA.		98	C-13

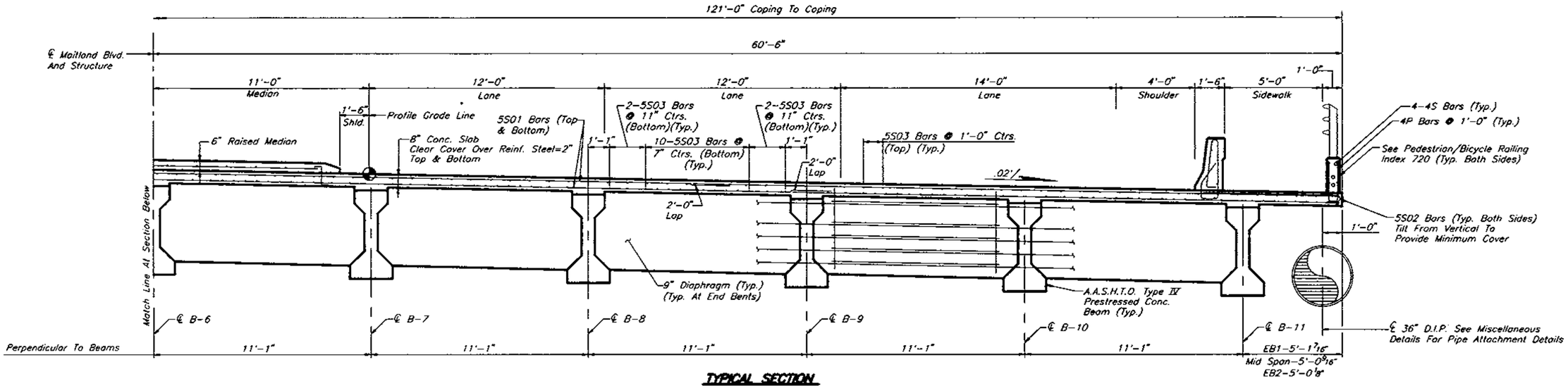

TYPICAL SECTION

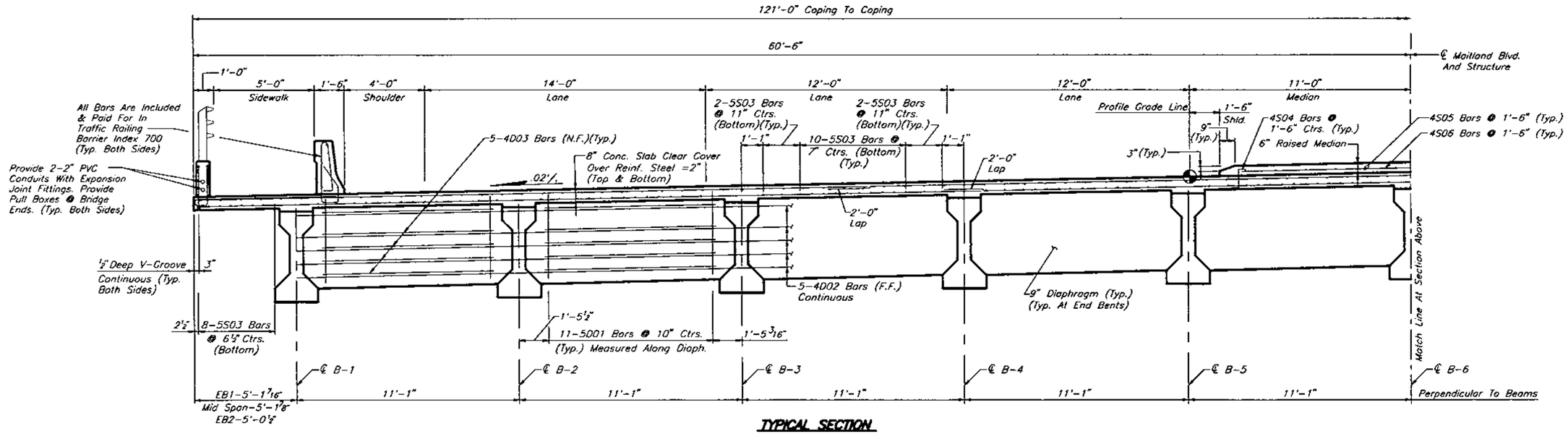

TYPICAL SECTION

NOTE:
1. See Superstructure Details Sheet For Superstructure Notes And Details.
2. All Dimensions Are Perpendicular To ℄ Const. Maitland Blvd. Unless Otherwise Noted.

REVISIONS					
Date	By	Description	Date	By	Description

	Names	Dates
Drawn by	JJS	3/96
Checked by	MKA	3/96
Designed by	MKA	3/96
Checked by	PM	3/96
Approved by	Peeter Mannik, P.E.	

ENGINEER OF RECORD:
DYER, RIDDLE, MILLS AND PRECOURT, INC.
1606 EAST COLONIAL DRIVE
ORLANDO, FLORIDA 32803

LOGO: DRMP DYER, RIDDLE, MILLS & PRECOURT, INC. ENGINEERS · SURVEYORS

SEAL: 3/4/98

FLORIDA DEPARTMENT OF TRANSPORTATION
STRUCTURES DESIGN OFFICE

ROAD NO.	COUNTY	PROJECT NO.
SR414	SEMINOLE	77002-3503

SHEET TITLE: **SUPERSTRUCTURE SECTION**

PROJECT NAME: **MAITLAND BOULEVARD OVER LITTLE WEKIVA RIVER**

Drawing No.

Index No.

JA/JS02/08/97 1:15PM M:\DOOBP\LWR\LWRSSEC.DWG

FED. ROAD DIV. NO.	STATE	PROJECT NO.	FISCAL YEAR	SHEET NO.
3	FLA.		98	C-14

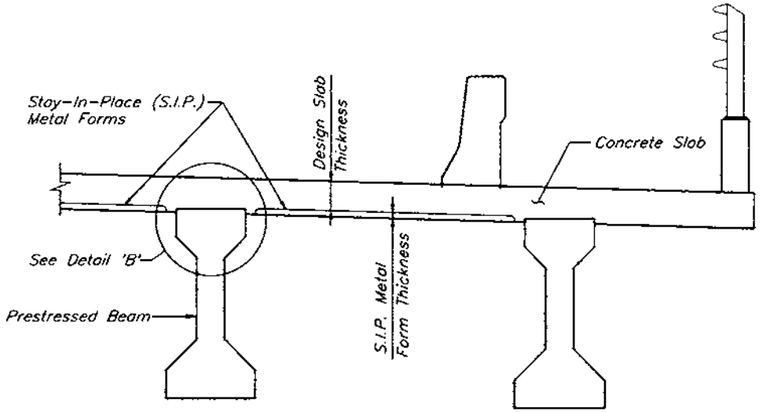

PARTIAL SECTION THRU SUPERSTRUCTURE

(Showing Typical Details And Notes For S.I.P. Metal Forms)

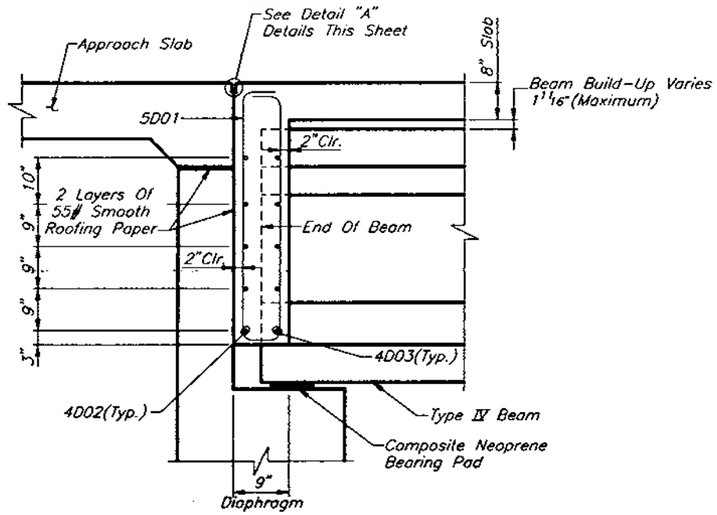

DIAPHRAGM SECTION AT END BENTS

NOTES

1. The Build-Up Dimensions Are Computed Assuming A Time To Release Of 24 Hours.
2. The Length Correction Dimension And The Build-Up Dimensions Assume A Period Of No More Than 120 Days Between The Casting Of The Beam And The Casting Of The Deck. These Values Are Also Calculated Assuming Transfer Of Prestress At The Indicated Release Concrete Strength (f'ci). Contractor Shall Submit Calculations Revising These Values To The Engineer For Approval Should The Contractor's Proposed Schedule Between Casting Of The Beam And Casting Of The Deck Adversely Affect These Time Dependent Values.
3. Dead Load Deflection During Pour Is The Anticipated Deflection Of Beam Due To Casting Of The Concrete Deck. Build-Up At Ends And Build-Up At Midspan (See Detail This Sheet) Refer To The Build-Up At The Ends And Midspan Of The Beam Anticipated To Achieve True Grade At The Top Of The Deck After Casting Of The Deck.
4. Slab Shall Be Screeded To Grade With No Allowance For Permanent Camber.
5. No Unit Shall Be Placed Adjacent To A Previously Placed Unit That Is Not A Minimum Of 72 Hrs. Old.
6. After Placement Of The First Unit, Succeeding Placements Shall Begin At The End Away From And Proceed Toward The Previously Placed Unit.
7. The Cost Of All Labor And Materials Required For Construction Of Deck Joint Shall Be Paid For In Bid Item No. 400-2-4 Class II Concrete (Superstructure).

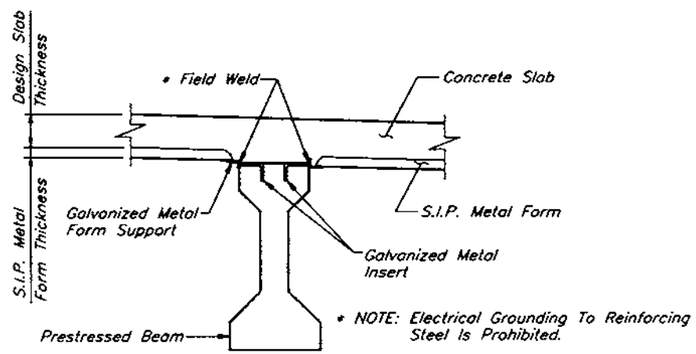

DETAIL 'B'

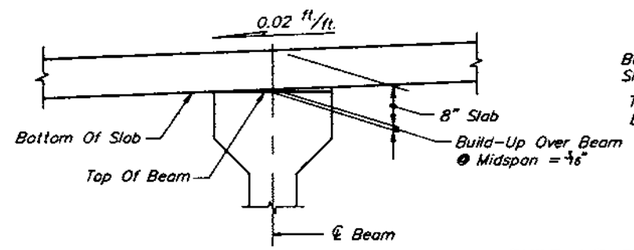

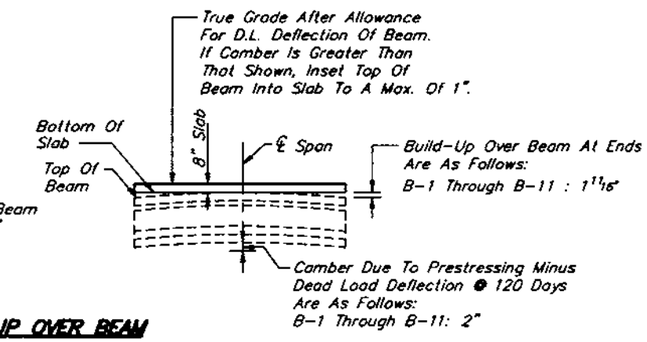

BUILD-UP OVER BEAM

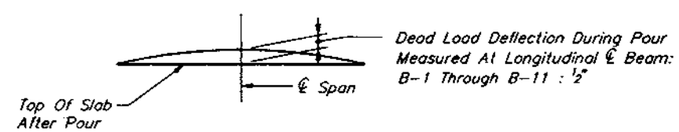

DEFLECTION DIAGRAM

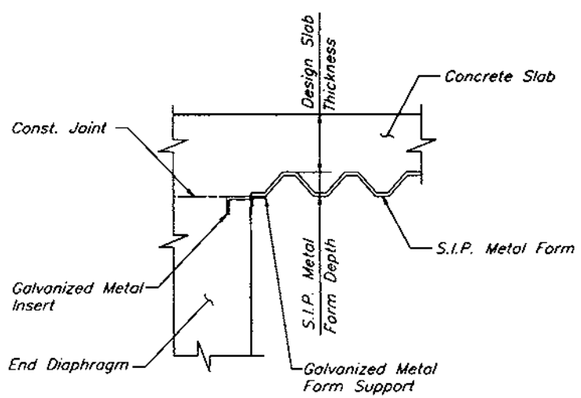

PARTIAL SECTION THRU END OF SPAN

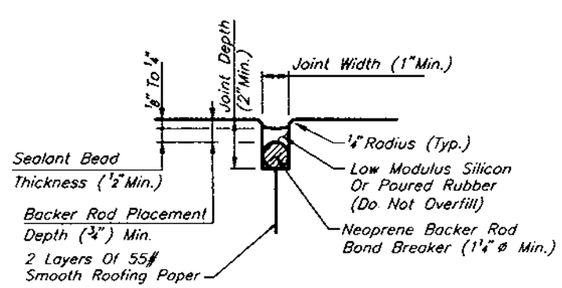

DETAIL 'A'

ESTIMATED DECK QUANTITIES

ITEM	UNIT	TOTALS
Class II Concrete (Superstructure)	C.Y.	261.9
Reinforcing Steel (Superstructure)	LB.	70,498
Prestressed Concrete Beams (Type IV)	L.F.	750

REVISIONS

Date	By	Description	Date	By	Description

	Names	Dates
Drawn by	JLA/JJS	3/96
Checked by	MKA	3/96
Designed by	MKA	3/96
Checked by	PM	3/96
Approved by	Peeter Mannik, P.E.	

ENGINEER OF RECORD:
DYER, RIDDLE, MILLS AND PRECOURT, INC.
1506 EAST COLONIAL DRIVE
ORLANDO, FLORIDA 32803

LOGO: DRMP

SEAL: 3/4/98

FLORIDA DEPARTMENT OF TRANSPORTATION
STRUCTURES DESIGN OFFICE

ROAD NO.	COUNTY	PROJECT NO.
SR414	SEMINOLE	77002-3503

SHEET TITLE: SUPERSTRUCTURE DETAILS

PROJECT NAME: MAITLAND BOULEVARD OVER LITTLE WEKIVA RIVER

Drawing No.

Index No.

02/08/97 1:15PM

FED. ROAD DIV. NO.	STATE	PROJECT NO.	FISCAL YEAR	SHEET NO.
3	FLA.		98	C-15

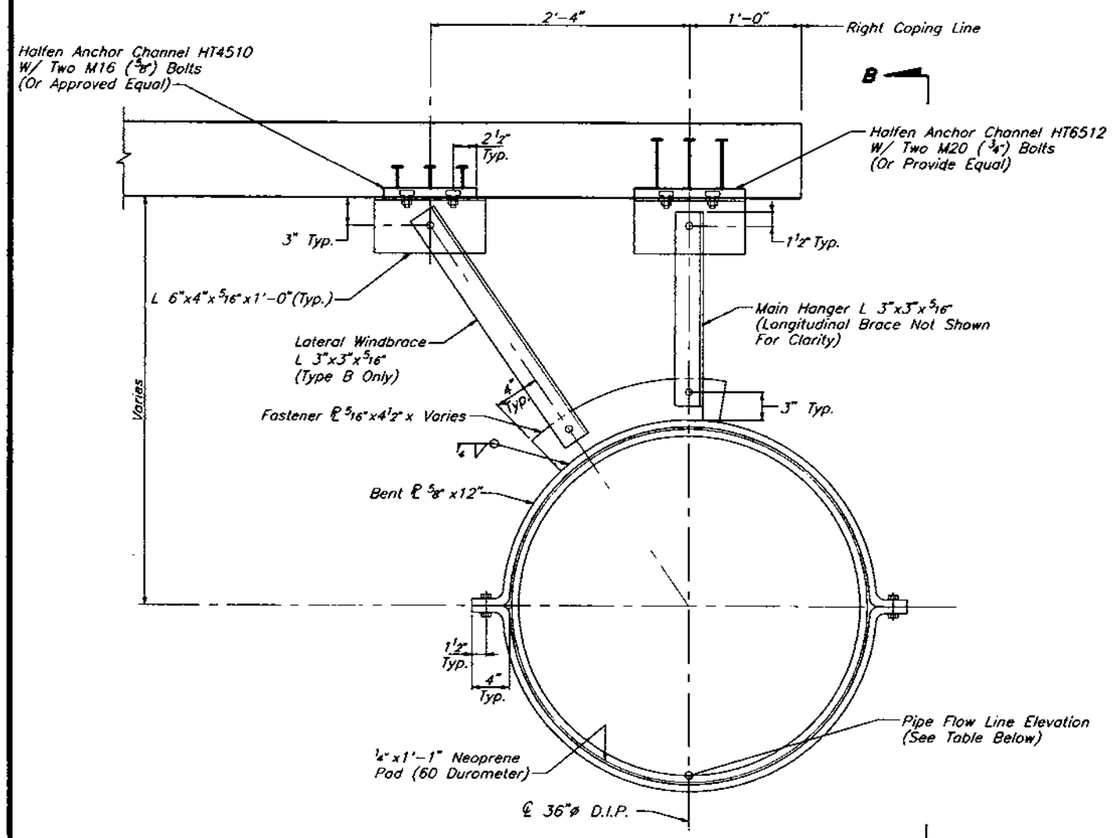

PIPE HANGER DETAIL

BRACED HANGER SHOWN
(SEE NOTE 1)

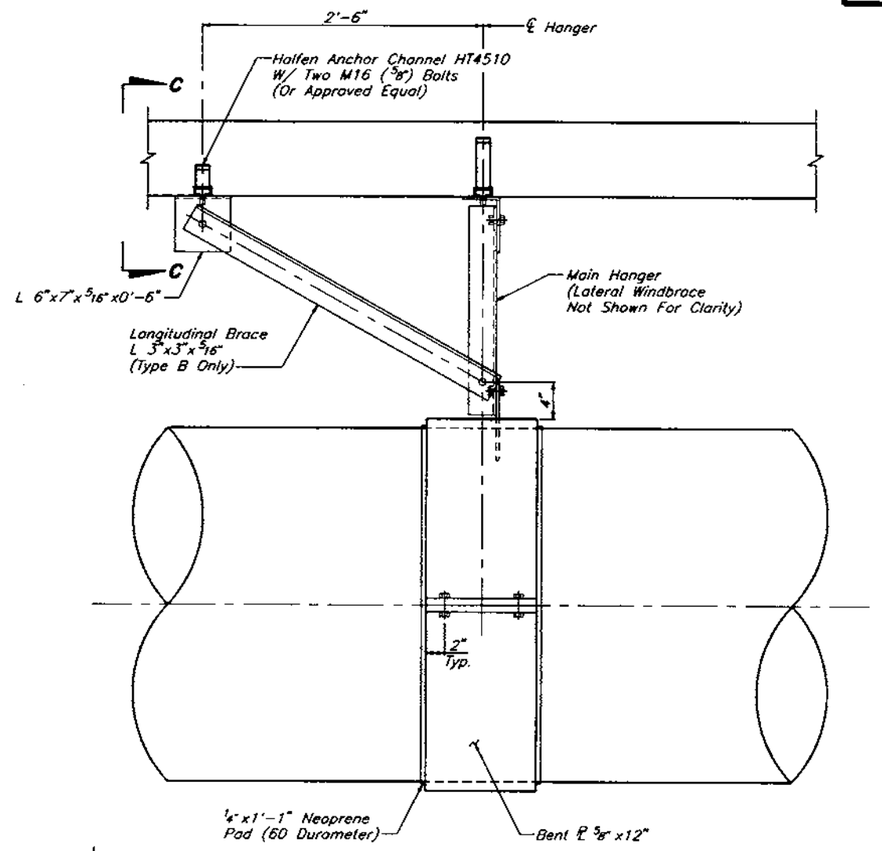

VIEW B-B

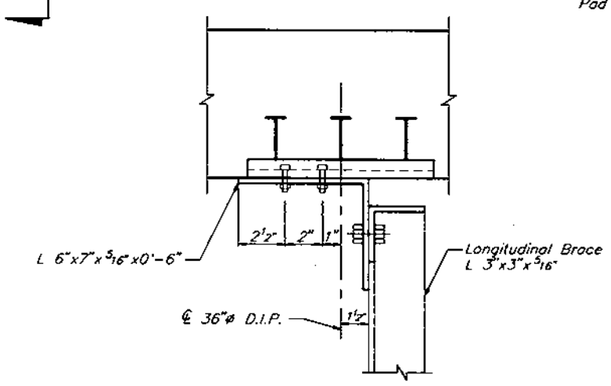

VIEW C-C

PIPE HANGER LOCATION		Type *	PIPE FLOW LINE ELEVATION
Station	Offset		
55+51.16	59.50	A	72.12
55+61.08	59.50	B	72.15
55+71.00	59.50	A	72.18
55+80.92	59.50	B	72.21
55+90.85	59.50	A	72.24
56+00.77	59.50	B	72.27
56+10.69	59.50	A	72.30
56+17.46	59.50	B	72.32

* See Note 1 For Description Of Hanger Types

NOTES:

1. Hanger Types:
   Type A – Includes Main Hanger Only
   Type B – Includes Main Hanger, Lateral Wind Brace & Longitudinal Brace.
   For Hanger Type Location See Pipe Hanger Location Table.
2. All Supports And Attachment Hardware Shall Be ASTM A36 Steel And Hot Dipped Galvanized After Fabrication. Paint Pipe And Hangers, See General Notes Sheet A-2. Color To Be Selected By The Engineer.
3. All Bolts And Nuts Are 7/8"ø And Shall Be In Accordance With ASTM F 593 & F 594, Group1, 304 ST. STL. (U.N.O.)
4. The Contractor Shall Furnish Complete Shop Drawings For Pipe Attachment Assembly.
5. Payment: The Cost Of The Pipe Hanger Assembly Shall Be Paid For Under Pay Item 1622-11-38 Bridge Hanger Anchor And Is Included In The CES Summary Of Bridge Pay Items. The Cost Of The Pipe Hanger Assembly Shall Include Anchorage, Neoprene Pads And Misc. Steel. The Cost Of The Ductile Iron Pipe Shall Be Paid For Under Pay Item 430-171-38. And Is Included In The CES Summary Of Bridge Pay Items.
6. The Pipe Shall Be Ductile Iron Pipe (D.I.P.). Pipe Shall Be In Accordance With The Technical Special Provisions.

REVISIONS

Date	By	Description	Date	By	Description

	Names	Dates
Drawn by	JLA/JJS	3/96
Checked by	MKA	3/96
Designed by	MKA	3/96
Checked by	PM	3/96
Approved by	Peeter Monnik, P.E.	

ENGINEER OF RECORD:
DYER, RIDDLE, MILLS AND PRECOURT, INC.
1506 EAST COLONIAL DRIVE
ORLANDO, FLORIDA 32803

LOGO: DRMP DYER, RIDDLE, MILLS & PRECOURT, INC. ENGINEERS · SURVEYORS

SEAL: Peeter Monnik 3/4/98

FLORIDA DEPARTMENT OF TRANSPORTATION
STRUCTURES DESIGN OFFICE

ROAD NO.	COUNTY	PROJECT NO.
SR414	SEMINOLE	77002-3503

SHEET TITLE: MISCELLANEOUS BRIDGE DETAILS

PROJECT NAME: MAITLAND BOULEVARD OVER LITTLE WEKIVA RIVER

Drawing No.

Index No.

JAY-JS03/07/98 08:59AM M:\000BRI\LWR\LWRMISC1.DWG

FED. ROAD DIV. NO.	STATE	PROJECT NO.	FISCAL YEAR	SHEET NO.
3	FLA.		98	C-16

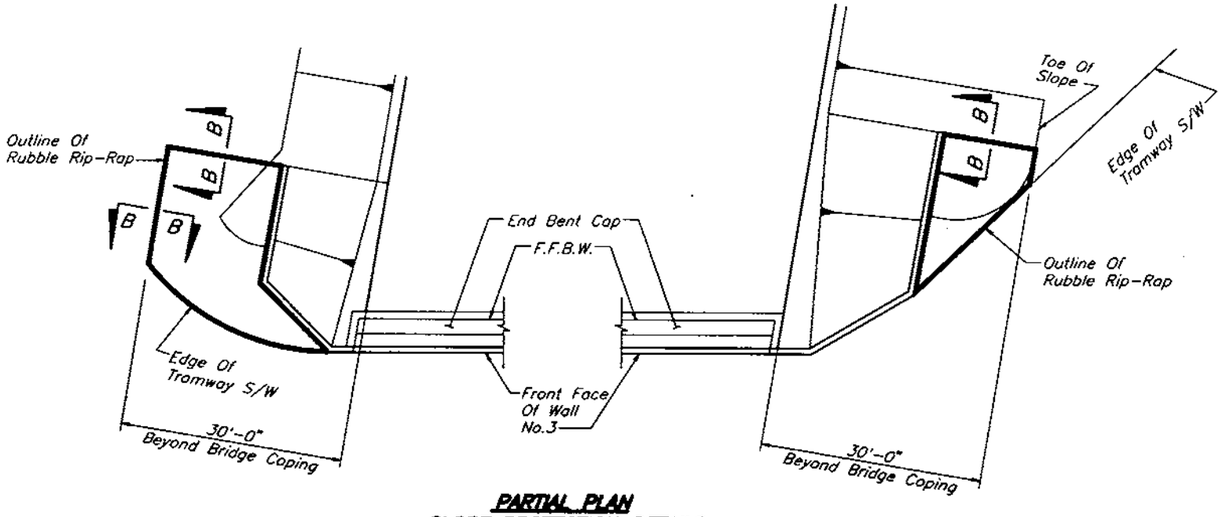

PARTIAL PLAN
SLOPE PROTECTION DETAILS
BEGIN BRIDGE

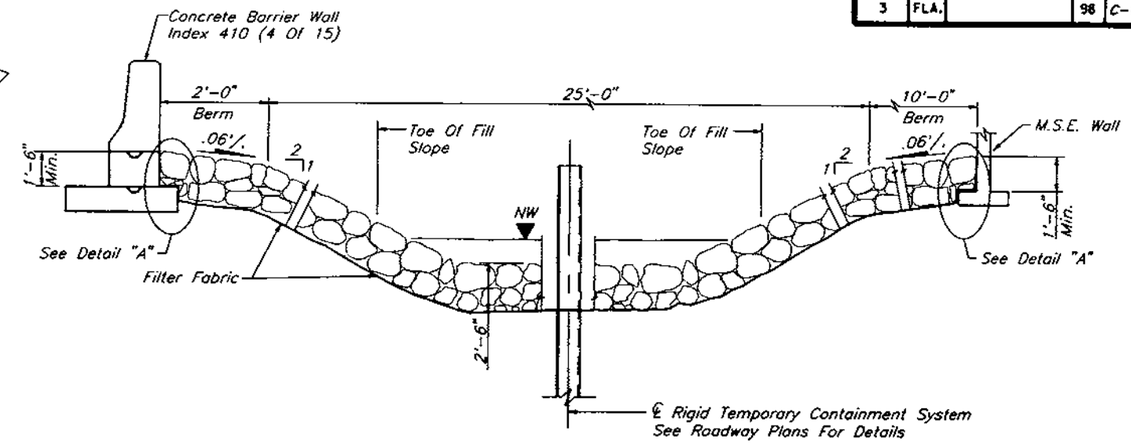

SECTION A-A

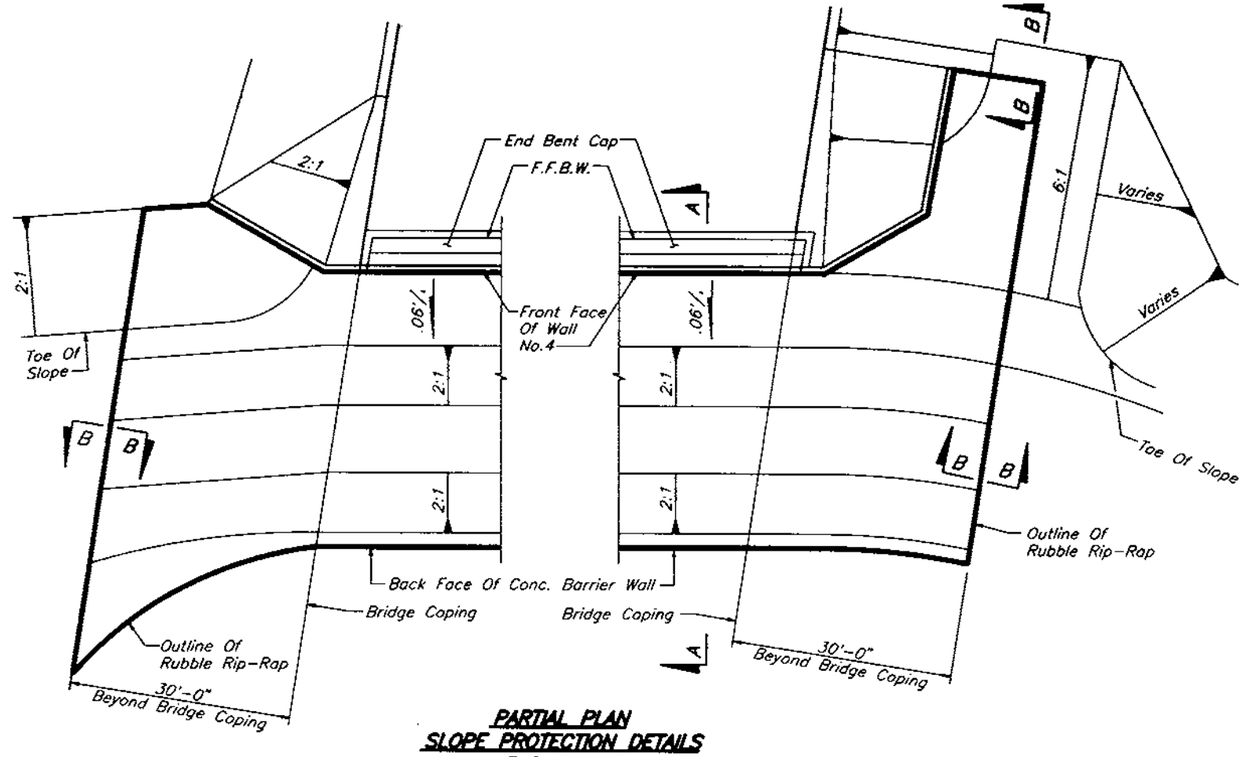

PARTIAL PLAN
SLOPE PROTECTION DETAILS
END BRIDGE

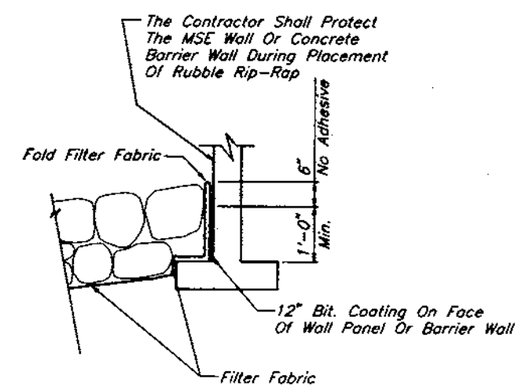

DETAIL "A"

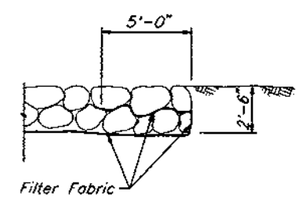

SECTION B-B

NOTE:
Filter Fabric Shall Be Type D-2 (AOS 70-100) In Accordance With Index No. 199 Of Roadway And Traffic Design Standards.

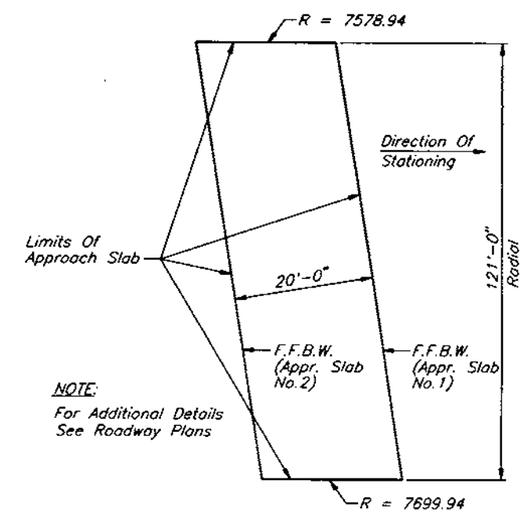

NOTE:
For Additional Details See Roadway Plans

APPROACH SLAB DETAILS

REVISIONS

Date	By	Description	Date	By	Description

	Names	Dates
Drawn by	JLA/JJS	3/96
Checked by	MKA	3/96
Designed by	MKA	3/96
Checked by	PM	3/96
Approved by	Peeter Monnik, P.E.	

ENGINEER OF RECORD:
DYER, RIDDLE, MILLS AND PRECOURT, INC.
1606 EAST COLONIAL DRIVE
ORLANDO, FLORIDA 32803

LOGO: DRMP DYER, RIDDLE, MILLS & PRECOURT, INC. ENGINEERS · SURVEYORS

SEAL: 3/4/98

FLORIDA DEPARTMENT OF TRANSPORTATION
STRUCTURES DESIGN OFFICE

ROAD NO.	COUNTY	PROJECT NO.
SR414	SEMINOLE	77002-3503

SHEET TITLE: **MISCELLANEOUS BRIDGE DETAILS**
PROJECT NAME: **MAITLAND BOULEVARD OVER LITTLE WEKIVA RIVER**
Drawing No.
Index No.

JA/JS 12/15/97 10:56 \DOGBR\LWR\LWRMISC2.DWG

FED. ROAD DIV. NO.	STATE	PROJECT NO.	FISCAL YEAR	SHEET NO.
3	FLA.		98	C-17

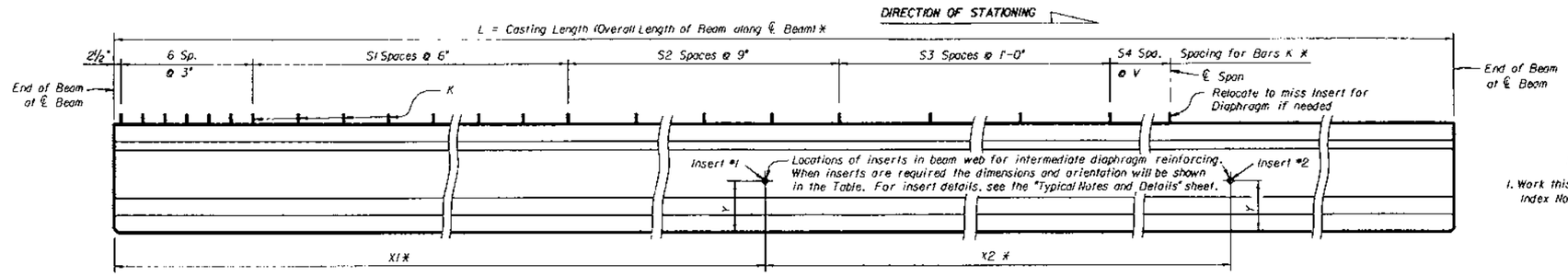

ELEVATION

NOTE: Dimension R has been included in the lengths(L) of beams to compensate for elastic and time-dependent shortening effects.

BEAM NOTES

1. Work this sheet with the Standard Index No. 100.

* Note: All longitudinal beam dimensions shown on this sheet with a single asterisk (*) are measured along the top of the beam at the centerline of beam.

** Note: End of beam bearing dimensions "J" and "K" are measured along the bottom of the beam.

BILL OF REINFORCING STEEL FOR ONE BEAM ONLY

MARK	SIZE	NO. REQUIRED	LENGTH (1)
A	5	8	See Table
D (2)(6)	3	28	Varies (6"-1' Min.)
K (2)	4	See Table	6'-1"
L (3)(4)	4	18	5'-5"
N (5)	⅜" Φ Strand	4	See Table
Z (2)	4	24	5'-9"

BENDING DIAGRAMS (1)

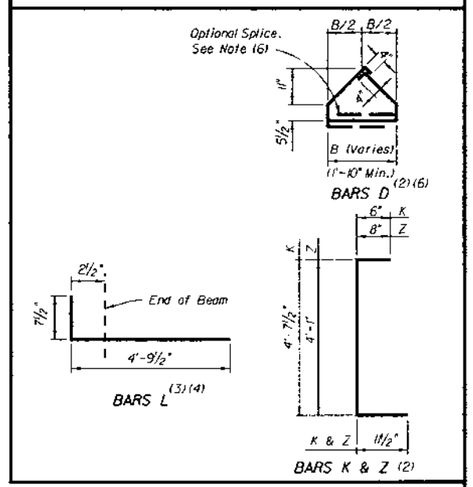

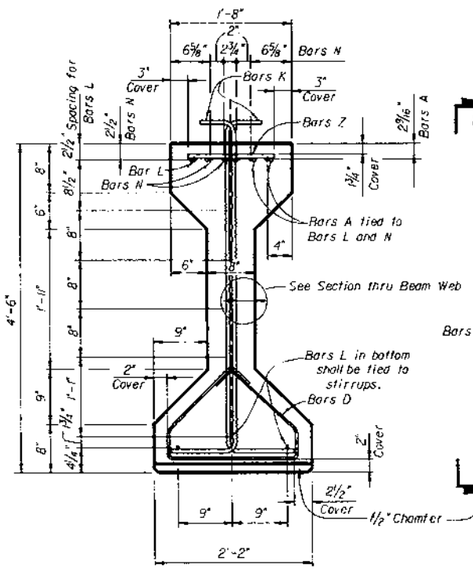

VIEW B-B

(With strands omitted, see Table for reference to strand pattern.)

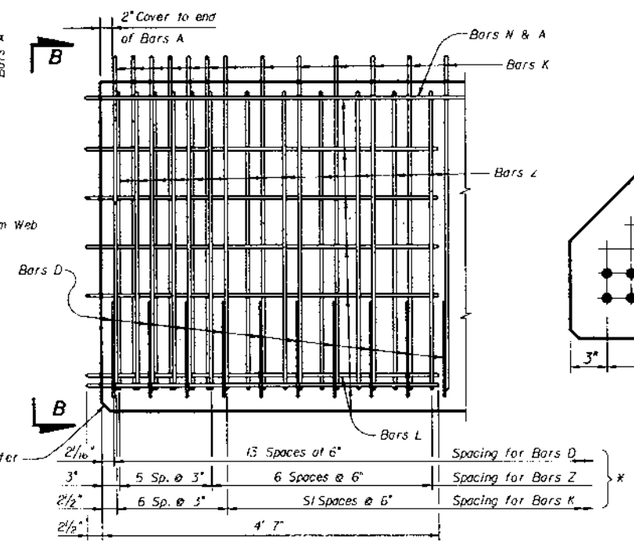

DETAIL AT END OF BEAM

NOTE: Stirrups shall be placed and tied to the top of the fully bonded prestressing strands in the bottom row.

NOTE: Place Bars K and Z one (1) each space (alternate).

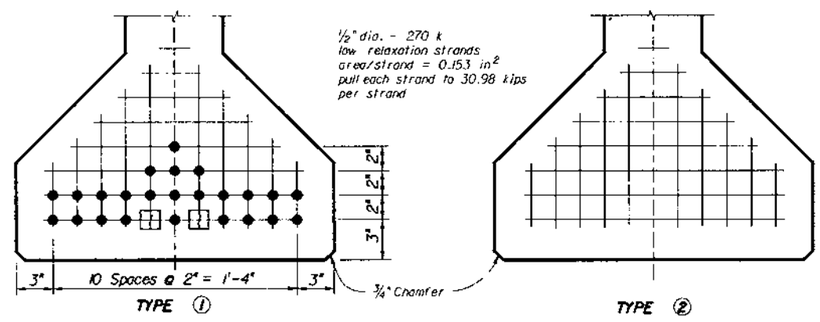

STRAND PATTERNS AND DEBONDING SCHEDULE

NOTE: ● -Indicates fully bonded strands.

[ ] -Indicates referenced pair of strands to be debonded 7'-8" which is measured from the ℄ bearing. *

TABLE OF BEAM VARIABLES

BEAM ID.	CONCRETE PROPERTIES: CLASS	STRENGTHS: REL. (f'ci)	STRENGTHS: 28-DAY (f'c)	STND PTRN TYPE	PLAN VIEW CASE	END ELEV COND.	END OF BEAM AND BEARING DIMENSIONS **: ANGLE Φ	DIM P	DIM J	DIM K	BEAM DIMENSIONS *: DIM L	DIM R	DIM V	NUMBER OF SPACES FOR STIRRUP BARS K: S1	S2	S3	S4	S5	S6	DIAPHRAGM INSERT LOCATIONS*: DIM X1	DIM X2	DIM Y	NS/FS (7) #1	#2	REINFORCING STEEL: A LENGTH*	K NO. REQ'D	N LENGTH*
B-1 Thru	IV	4500	5500	1	2	1	80°56'48"	0"	6½"	11"	68'-⅝"	7/16"	0'-10⁵⁄₁₆"	31	9	10	1	0	0	–	–	–	–	–	10'-1"	115	68'-7"
B-11																											

REVISIONS

Date	By	Description	Date	By	Description
			94R		

	Names	Dates
Drawn by	JJS	3/96
Checked by	KCH	3/96
Designed by	KCH	3/96
Checked by	MKA	3/96
Approved by	Peeter Mannik, PE	

ENGINEER OF RECORD: DYER, RIDDLE, MILLS AND PRECOURT, INC. 1605 EAST COLONIAL DRIVE ORLANDO, FLORIDA 32803

LOGO: DRMP DYER, RIDDLE, MILLS & PRECOURT, INC. ENGINEERS · SURVEYORS

SEAL: Peeter Mannik 3/4/98

FLORIDA DEPARTMENT OF TRANSPORTATION
STRUCTURES DESIGN OFFICE

ROAD NO.	COUNTY	PROJECT NO.
SR414	SEMINOLE	77002-3503

SHEET TITLE: AASHTO TYPE IV BEAMS

PROJECT NAME: MAITLAND BLVD. OVER LITTLE WEKIVA RIVER

Drawing No. 1 of 1

Index No. S-104

NOTES:

(1) All bar dimensions are out-to-out.

(2) Bars D, K, and Z shall be bent around pins having the following diameters for respective sizes:

Bar Size	Pin Diameters
#3	1"
#4	2"

(3) Bars L shall be bent prior to the beam leaving the prestressing yard. For treatment of bars L at skewed beam ends, see "Plan Ends of Beams".

(4) Caution should be used with Bars L in the ends of exterior beams to assure that the bent portion of the bar is properly oriented so that the bar will be embedded in the diaphragm concrete.

(5) Bars N shall be either ASTM A416, Grade 250 or 270, seven-wire strands ⅜" Φ or larger, stressed to 10,000 lbs. each.

(6) The minimum Dimension B and length of Bars D shown apply to one-piece Bars D placed perpendicular to the centerline of the beam. Dimension B and the length of Bars D for beams with skewed ends vary with the skew (See "Plan Ends of Beams").
At the Contractor's option, Bars D may be fabricated either as a two-piece bar with a 1'-2" lap splice of the bottom legs or may be welded wire fabric, one or two-piece, provided the wire size and spacing furnishes the same steel area as the No. 3 Bars shown.

(7) (NS) means Near Side and (FS) means Far Side, both referring to which face of the beam web is to receive the insert for the dimensioned location. (NS) and (FS) are referenced to the DIRECTION OF STATIONING shown.

(8) CONTRACTOR'S OPTION: Welded deformed wire fabric reinforcement may be used in lieu of Bars D, K, L and Z provided the wire sizes and spacings match those shown on this sheet for these bars.

(9) Optional stranding shall comply in all respects with the Department's Structures Design Guidelines.

LWRS104.DGN

FED. ROAD DIV. NO.	STATE	PROJECT NO.	FISCAL YEAR	SHEET NO.
3	FLA.		98	C-18

LOCATION – SUPERSTRUCTURE (REQUIRED 1)

MARK SIZE	MARK DES.	LENGTH FT. IN.	NO. BARS	TYPE BAR	STYLE A	STYLE G	B FT. IN. FR.	C FT. IN. FR.	D FT. IN. FR.	E FT. IN. FR.	F FT. IN. FR.	H FT. IN. FR.	J FT. IN.	K FT. IN.	N NO.	Ø ANG.
5	S01	125-11	330	2			2-0-0	121-11-0							2	
5	S02	6-10	166	17	1		6-3-0									
5	S03	70-6	277	2			2-0-0	68-6-0							1	
4	S04	1-9	92	32			0-9-0	0-6-0	0-6-0							
4	S05	70-3	13	2			1-9-0	68-6-0							1	
4	S06	18-6	46	1			18-6-0									
5	D01	9-1	220	7			4-0-0	0-5-0	0-4-0	0-4-0						
4	D02	115-8	10	2			1-9-0	112-2-0							2	
4	D03	9-2	100	1			9-2-0									
4	P	5-2	138	23			2-4-0	0-2-0	2-4-0							
4	S	70-3	8	2			1-9-0	68-6-0							1	

LOCATION – END BENT 1 (REQUIRED 1)

MARK SIZE	MARK DES.	LENGTH FT. IN.	NO. BARS	TYPE BAR	STYLE A	STYLE G	B FT. IN. FR.	C FT. IN. FR.	D FT. IN. FR.	E FT. IN. FR.	F FT. IN. FR.	H FT. IN. FR.	J FT. IN.	K FT. IN.	N NO.	Ø ANG.
9	A01	68-2	4	2			5-0-0	63-2-0							1	
9	A02	73-10	6	2			5-0-0	68-10-0							1	
9	A03	54-6	10	1			54-6-0									
4	A05	9-1	11	4	4	4	1-10-0	2-4-0								
4	A06	10-1	199	4	4	4	2-4-0	2-4-0								
4	A07	8-0	11	5			2-4-0	2-4-0	0-6-0	0-6-0						
4	A08	5-9	242	1			5-9-0									
6	A09	1-6	30	1			1-6-0									
4	A10	65-0	8	2			1-6-0	63-6-0							1	
4	A11	56-8	10	2			1-6-0	55-2-0							1	
5	A16	6-6	9	12			4-6-0	2-0-0								81
5	A17	4-0	5	10			2-0-0	2-0-0								
5	A18	6-6	8	14			4-6-0	2-0-0								81
5	A19	8-4	10	1			8-4-0									
4	A20	2-4	40	1			2-4-0									
4	A21	2-9	4	1			2-9-0									
4	A22	4-4	67	11			1-4-0	1-6-0	1-6-0							
5	A23	5-7	24	11			0-7-0	2-6-0	2-6-0						1	
4	A24	70-4	2	2			1-6-0	68-10-0								
5	A26	4-8	8	1			4-8-0									
5	A27	7-8	5	1			7-8-0									

LOCATION – END BENT 2 (REQUIRED 1)

MARK SIZE	MARK DES.	LENGTH FT. IN.	NO. BARS	TYPE BAR	STYLE A	STYLE G	B FT. IN. FR.	C FT. IN. FR.	D FT. IN. FR.	E FT. IN. FR.	F FT. IN. FR.	H FT. IN. FR.	J FT. IN.	K FT. IN.	N NO.	Ø ANG.
9	A04	71-4	10	2			5-0-0	66-4-0							1	
4	A05	9-1	11	4	4	4	1-10-0	2-4-0								
4	A06	10-1	199	4	4	4	2-4-0	2-4-0								
4	A07	8-0	11	5			2-4-0	2-4-0	0-6-0	0-6-0						
4	A08	5-9	242	1			5-9-0									
6	A09	1-6	30	1			1-6-0									
9	A12	56-11	6	1			56-11-0									
9	A13	51-8	4	1			51-8-0									
4	A14	67-4	10	2			1-6-0	65-10-0							1	
4	A15	53-5	8	2			1-6-0	51-11-0							1	
5	A16	6-6	8	12			4-6-0	2-0-0								81
5	A17	4-0	5	10			2-0-0	2-0-0								
5	A18	6-6	9	14			4-6-0	2-0-0								81
5	A19	8-4	10	1			8-4-0									
4	A20	2-4	44	1			2-4-0									
4	A22	4-4	66	11			1-4-0	1-6-0	1-6-0							
5	A23	5-7	24	11			0-7-0	2-6-0	2-6-0							
4	A25	59-0	2	2			1-6-0	57-6-0							1	
5	A26	4-8	8	1			4-8-0									
5	A27	7-8	5	1			7-8-0									

REVISIONS

Date	By	Description	Date	By	Description

	Names	Dates
Drawn by	JLA/JJS	3/96
Checked by	MKA	3/96
Designed by	MKA	3/96
Checked by	PM	3/96
Approved by	Peeter Mannik, P.E.	

ENGINEER OF RECORD: DYER, RIDDLE, MILLS AND PRECOURT, INC. 1605 EAST COLONIAL DRIVE ORLANDO, FLORIDA 32803

LOGO: DRMP DYER, RIDDLE, MILLS & PRECOURT, INC. ENGINEERS · SURVEYORS

SEAL: 3/4/96

FLORIDA DEPARTMENT OF TRANSPORTATION
STRUCTURES DESIGN OFFICE

ROAD NO.	COUNTY	PROJECT NO.
SR414	SEMINOLE	77002-3503

SHEET TITLE: REINFORCING BAR LIST

Drawing No.

PROJECT NAME: MAITLAND BOULEVARD OVER LITTLE WEKIVA RIVER

Index No.

JA/JS02/08/97 1:19PM M:\DOGPA\LWR\1RBLLWR.DWG

FED. ROAD DIV. NO.	STATE	PROJECT NO.	FISCAL YEAR	SHEET NO.
3	FLA.		98	C-19

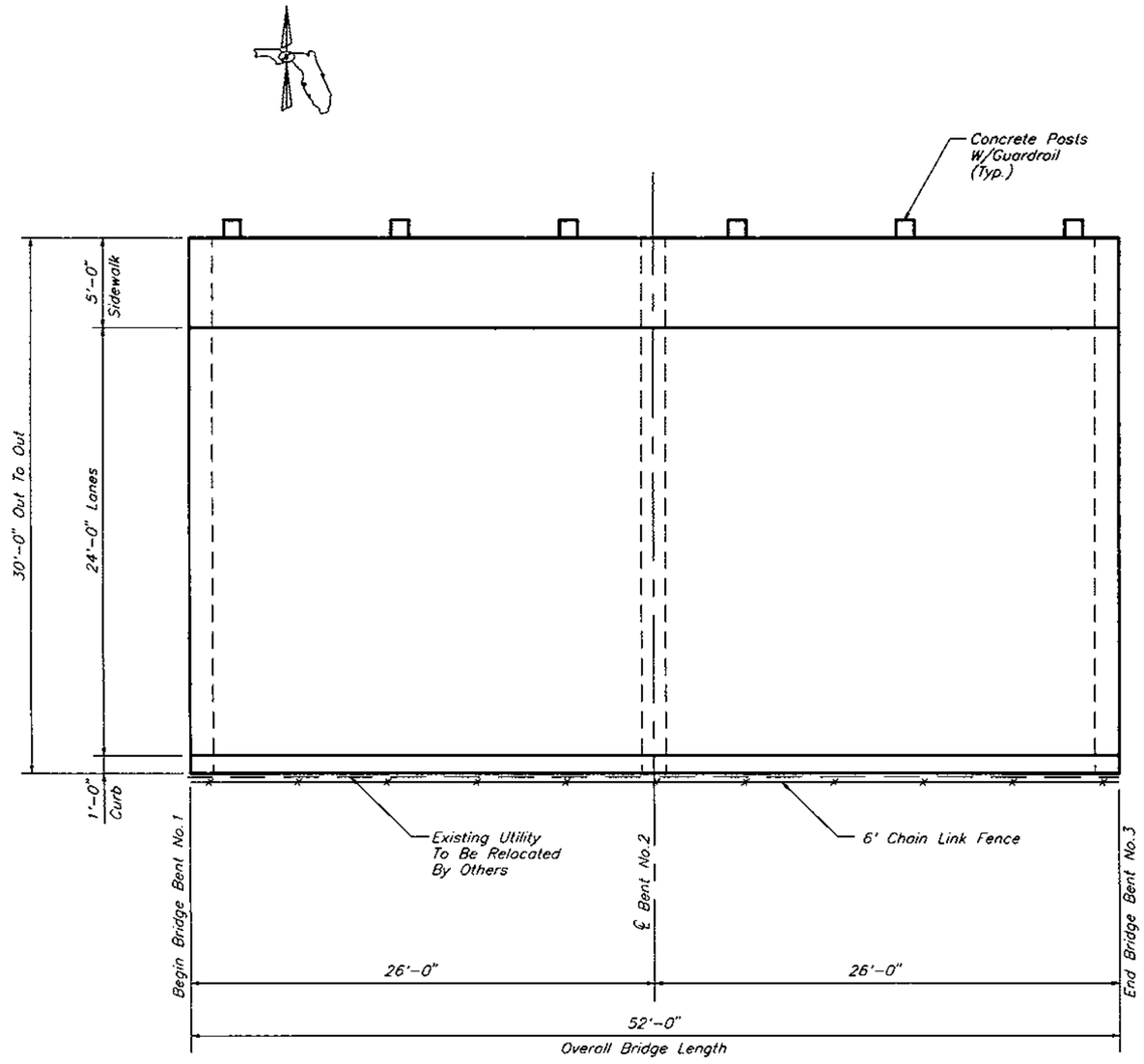

PLAN

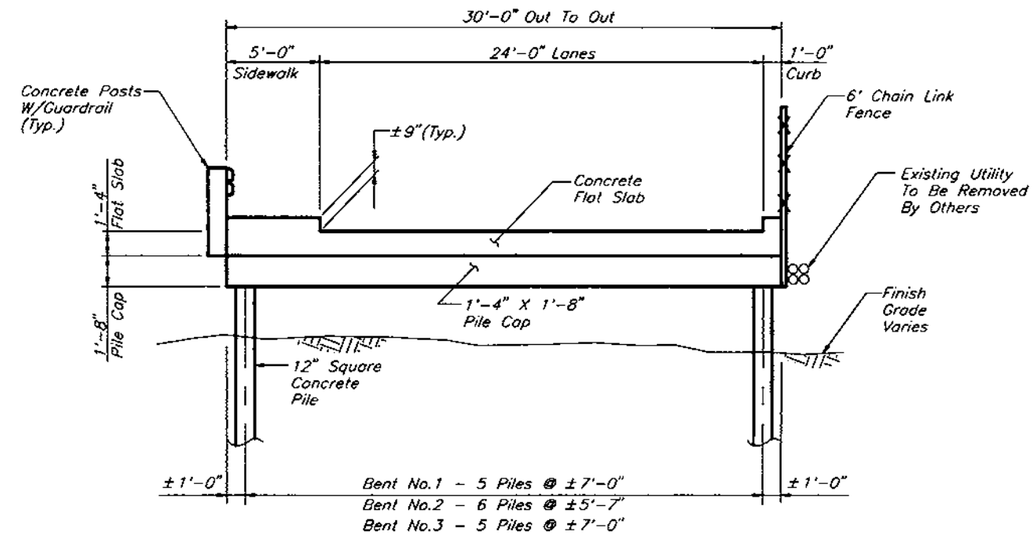

TYPICAL SECTION
Looking East

Notes:

1. Entire Bridge Removal Is Required. Existing Piling Shall Be Cut Off At Least Two Feet Below The Proposed Channel Excavation.
2. Bridge Removal Shall Be In Accordance With FDOT Specifications Section 110-6.

REVISIONS					
Date	By	Description	Date	By	Description

	Names	Dates
Drawn by	JJS	3/96
Checked by	MKA	3/96
Designed by	MKA	3/96
Checked by	PM	3/96
Approved by	Peeter Mannik, P.E.	

ENGINEER OF RECORD:
DYER, RIDDLE, MILLS AND PRECOURT, INC.
1506 EAST COLONIAL DRIVE
ORLANDO, FLORIDA 32803

LOGO: DRMP

SEAL: 3/4/98

FLORIDA DEPARTMENT OF TRANSPORTATION
STRUCTURES DESIGN OFFICE

ROAD NO.	COUNTY	PROJECT NO.
SR414	SEMINOLE	77002-3503

SHEET TITLE: **ORANOLE ROAD BRIDGE REMOVAL**

PROJECT NAME: **MAITLAND BOULEVARD OVER LITTLE WEKIVA RIVER**

Drawing No.

Index No.

JA/JS02/03/97 1:19PM M:\000BPA\LWR\ORBLWR.DWG

FED. ROAD DIV. NO.	STATE	PROJECT NO.	FISCAL YEAR	SHEET NO.
3	FLA.		98	W-1

GENERAL NOTES

1. Construction Specifications: Florida Department of Transportation, "Standard Specifications For Road and Bridge Construction", (1991) Supplements Thereto, And Technical Special Provision Section 549 Tensor Retaining Wall system.
2. Design Specifications: Design in accordance with the 1992 Edition of The AASHTO "Standard Specifications for Highway Bridges" and applicable interims through 1995, the Florida Department of Transportation, "Structures Design Guidelines", Revision Date April 3, 1995 and "Insitu Soil Improvement Techniques" AASHTO-AGC-ARTBA Task Force 27 Ground Modification Techniques January 1990.
3. Stresses: All allowable stresses are in accordance with current AASHTO Standard Specifications for all the materials shown on plans.
   A. Maximum Concrete Stresses : Class III f'c = 5000 PSI Min
   B. Reinforcing Steel : Grade 60
4. Environment: Extremely Aggressive
5. Design Method: Load Factor
6. Loads On Retaing Walls (Imposed By Sound Wall - 12'-8" Max. Ht.) Maximum Horizontal Wind Load = 469 lb/ft (Located 6'-4" Above Base Of Wall) Maximum Vertical Dead Load = 724 lb/ft (w/o Wt. Of Footer)
7. For Typical Sections Through Roadway, See Roadway Plans.
8. Pay Item No. 549-70-206 Shall Include The Proprietary Retaining Wall And The Following Where Applicable.
   1. Cast-In-Place Coping
   2. Sound Barrier Wall Footings
   3. Concrete Parapet And Sidewalk.
   4. Temporary Cofferdams (See Note 23).
9. See Technical Special Provisions 549-8 For Payment Information.
10. Coping & Concrete Parapet on top of retaining wall shall have a Class 5 Applied Finish Coating. Color of Coating shall match Sound Wall Color. All Retaining Wall areas shall recieve an Anti-Graffiti Coating. The area of Wall to recieve the Anti-Graffiti Coating shall be the area bounded by the top of the Concrete Parapet (or top of coping in areas without a Parapet), the final ground line at the face of Wall and the beginning and end limits of the Wall. The cost of the Anti-Graffiti Coating shall be paid for under Pay Item 563-2 Coating Concrete surface.
11. Piles within the Proprietary Wall Earth Volume shall be driven prior to construction of the Proprietary Retaining Wall. The portion of the piles within the wall volume shall be wrapped in accordance with supplemental specification 459.
12. These Walls Have Been Designed To Accomodate An Anticipated Maximum Settlement Between 2 And 2.5 Inches. The Anticipated Differential Settlements Is Between 0.5 And 1 Inch In 50 Ft.
13. Top Of Leveling pad shall be 1'-6" min below either the final ground line or muck removal line which ever is lowest. The leveling pad shall be horizontal with steps (as required).
14. Elevations shown are at top of coping.
15. The Wall Shall Be Bid As Tensar Concrete Geo Wall, Pay Item No. 549-70-206. No Substitution Of Other Wall Companies Shall Be Allowed.
16. Wall Criteria and Minimum Saftey Factors:

Overturning	= 2.0
ng	= 1.5
Bearing Capacity	= 2.5
Internal Pullout	= 1.5 (Allowable Deformation = 0.75 in.)
Overall Stability	= 1.5

17. See Roadway Plans For Drainage Structures Within The Limits Of Retaining Walls.
18. Soil Reinforcements Lengths for External Stability

Wall No.1

Begin Station	25+85	26+00	27+00	27+50	29+00	29+50	30+50	31+00	31+50	32+00	33+50
End Station	26+00	27+00	27+50	29+00	29+50	30+50	31+00	31+50	32+00	33+50	34+25
Min. Wall Height "H" (Ft.)	4.4	5.5	8.4	13.6	21.7	25.4	22.5	20.3	17.2	16.2	19.8
Max. Wall Height "H" (Ft.)	5.5	8.4	13.6	22.3	25.4	26.9	26.7	22.5	20.3	19.8	23.5
Reinforcement Length (Ft.) *	9	11	18	25	28	48	46	25	24	23	32
Allowable Bearing Capacity (psf)	1150	1550	2550	3500	3900	4500	4500	3500	3400	3250	4500

Wall No.2

Wall Height "H" (Ft.)	8	9	10	11	12	13	14	15	16	17	18	19	20
Reinforcement Length (Ft.) *	9	11	11	12	12	14	14	16	16	17	17	19	19
Allowable Bearing Capacity (psf)	1350	1650	1650	1750	1750	2050	2050	2350	2350	2450	2450	2800	2800

Wall No.3 And No.4

Wall Height "H" (Ft.)	8	9	10	11	12	13	14	15	16	17	18
Reinforcement Length (Ft.) *	10	11	11	12	12	12	12	12	13	14	14
Allowable Bearing Capacity (psf)	1750	1900	1900	1900	1900	1900	1900	1900	2000	2000	2100

Wall No.5

Wall Height (Ft.)	1	2	3	4	5	6	7
Minimum Reinforcement Length (Ft.)	15	16	17	18	19	20	20.5
Allowable Bearing Capacity (psf)	1300	1300	1300	1280	1250	1210	1100

19. Design Based ø = 30° (Assumed sand backfill)
20.

FOUNDATION SOIL PROPERTIES FOR WALL DESIGN

Soil Type	Saturated Unit Weight (pcf)	Cohesion (psf)	Angle Of Internal Friction
I Foundation Subsoil: a. Sand	110	0	30
b. Clay To Sandy Clay	105	500	5
II Embankment Soil	110	0	30
III Mechanically Stabilized Soil	105	0	30

21. If the unit weight of the fill proposed by the Contractor differs from the above, the Project Engineer shall contact both the District Geotechnical Engineer and Wall Designer for a possible redesign.
22. Additional layers and coverage of the geogrid shall be used in the vicinity of the piles as necessary to compensate for the cutting of the geogrid reinforcement at piles. The cost of the additional layers of Geo Grid shall be included in the cost for Retaining Wall, Pay Item No. 549-70-206.
23. Before wall construction begins, at retaining wall No.1, organic soils shall be removed and backfilled in accordance with the Roadway Plans and specifications. A Temporary Cofferdam in accordance with section 125 shall be required for organic soil removal and dewatering. The Contractor is Responsible for all design requirements for the Temporary Cofferdam. The word "Cofferdam" shall include any sheeting, bracing, sheet piles, dewatering operations, etc. that the Contractor may select to use to protect the excavation. The temporary cofferdam shall be cutoff 2 feet below finish grade and the remainder to be Left-In-Place. See bid item notes on the General Note Sheet (A-2) for payment information.
24. The Reinforcing Strips And Fasteners For The Abutment Backwall Shall Be Designed And Furnished By The Tensar Company. For Horizontal Design Loads (kips Per Foot Of Backwall) See End Bent Detail Sheets. The Cost Of The Strips And Fasteners To Be Included In The Cost Of The Tensar Walls. Installation Shall Be By The Bridge Contractor.
25. The long-term design strength (LTADS) of the geogrid soil reinforcements shall include reduction factors for chemical and biological degradation, construction damage, creep, and junction strength, and a factor of safety for uncertainties. The LTADS shall not exceed 15% of the ultimate design strength for each geogrid soil reinforcement type as determined by GRI test method GG1-87, single rib test.
26. All Foundations Shall Be Constructed In The Dry. The Soil Beneath The Tensar Wall Foundation & Leveling Pad Shall Be Over-Excavated One Foot And Replaced With Sand Meeting The Requirements Of 902-4 For Types I-IV Underdrains. The Sand Backfill Shall Be Compacted To A Density Not Less Than 100 Percent Of The Maximum Density As Determined By AASHTO T-99.
27. It Should Be Anticipated That Dewatering Will Be Required At The Tensar Wall Location In Order To Maintain The Water Level A Minimum Of One Foot Below The Maximum Depth Of Excavation. Normal Dewatering Methods Will Not Be Sufficient. The Dewatering System Shall Be Designed By An Engineer Experienced In Design Of These Type Of Systems. Submit Dewatering Details For review By The Engineer. Submittal Must Be Signed & Sealed By A Professional Engineer Registered In The State Of Florida. This Dewatering Shall Be Continuous Until The Tensar Wall Construction Is 2' Above The Normal Water Level. Dewatering Shall Be Included In The Cost Of The Retaining Walls. See Sheet W-9 For Approximate Location Of Temporary Cofferdam.

* The Reinforcement Strap Lengths Shown In This Row Are The Minimum Lengths Required For External Stability. The Proprietary Wall Companies Are Responsible For Internal Stability Of The Retaining Walls. The Reinforcment Lengths Used In The Construction Of The Retaining Walls Shall Be Longer Of That Required For Internal Or External Stability. See Chapter 18 Of The Structures Design Guidelines For Additional Information.

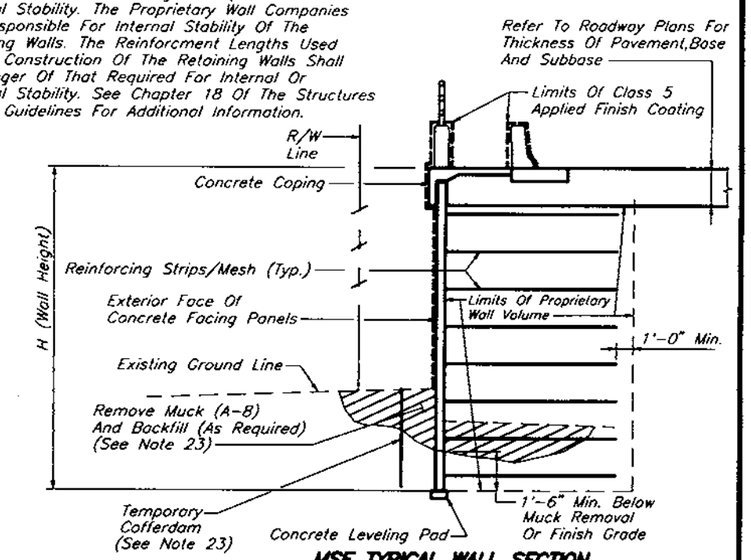

MSE TYPICAL WALL SECTION
(N.T.S.)

INDEX OF RETAINING WALL CONTROL DRAWINGS

W-1 GENERAL NOTES AND SECTION
W-2 REPORT OF SPT BORINGS FOR STRUCTURE
W-3 REPORT OF SPT BORINGS FOR STRUCTURE
W-4 REPORT OF SPT BORINGS FOR STRUCTURE
W-5 REPORT OF SPT BORINGS FOR STRUCTURE
W-6 REPORT OF SPT BORINGS FOR STRUCTURE
W-7 REPORT OF SPT BORINGS FOR STRUCTURE
W-8 REPORT OF SPT BORINGS FOR STRUCTURE
W-8A REPORT OF SPT BORINGS FOR STRUCTURE
W-9 RETAINING WALL NO. 1 ALIGNMENT
W-10 RETAINING WALL NO. 2 ALIGNMENT
W-11 RETAINING WALL NO.1 & NO.2 DETAILS (SHEET 1 OF 2)
W-12 RETAINING WALL NO.1 & NO.2 DETAILS (SHEET 2 OF 2)
W-13 RETAINING WALL NO.3 ALIGNMENT
W-14 RETAINING WALL NO.4 ALIGNMENT
W-15 RETAINING WALL NO.3 AND NO.4 DETAILS
W-16 RETAINING WALL NO. 5 ALIGNMENT AND DETAILS
W-17 THRU W-21 TENSAR RETAINING WALL STANDARD DETAILS

RETAINING WALL LEGEND

RETAINING WALL NO.	LOCATION
NO. 1	26+00 TO 34+20, SOUTH SIDE
NO. 2	40+80 TO 43+00, SOUTH SIDE
NO. 3	LITTLE WEKIVA RIVER BRIDGE END BENT NO.1
NO. 4	LITTLE WEKIVA RIVER BRIDGE END BENT NO.2
NO. 5	219+38 TO 220+55, ORANGE COUNTY

ESTIMATED QUANTITIES

LOCATION	RETAINING WALL (SF)	ANTI-GRAFFITI (SF)
RETAINING WALL NO. 1	11,596	11,596
RETAINING WALL NO. 2	2,005	2,005
RETAINING WALL NO. 3	1,501	1,501
RETAINING WALL NO. 4	1,818	1,818
RETAINING WALL NO. 5	355	386+

+INCLUDES THE SURFACE AREA FOR THE GRAVITY WALL

REVISIONS

Date	By	Description	Date	By	Description

	Names	Dates
Drawn by	JLA/JJS	3/96
Checked by	MKA	3/96
Designed by	MKA	3/96
Checked by	PM	3/96
Approved by	Peeter Mannik, P.E.	

ENGINEER OF RECORD:
DYER, RIDDLE, MILLS AND PRECOURT, INC.
1506 EAST COLONIAL DRIVE
ORLANDO, FLORIDA 32803

LOGO: DRMP DYER, RIDDLE, MILLS & PRECOURT, INC. ENGINEERS · SURVEYORS

SEAL: Peeter Mannik 3/4/98

FLORIDA DEPARTMENT OF TRANSPORTATION
STRUCTURES DESIGN OFFICE

ROAD NO.	COUNTY	PROJECT NO.
SR414	ORANGE SEMINOLE	75011-3508 77002-3503

SHEET TITLE: GENERAL NOTES AND SECTION
Drawing No.
PROJECT NAME: MAITLAND BOULEVARD
Index No.

JA/JS02/24/98 2:53PM M:\000BR\RET\MAITRWNT.DWG

FED. ROAD DIV. NO.	STATE	PROJECT NO.	FISCAL YEAR	SHEET NO.
3	FLA.			W-2

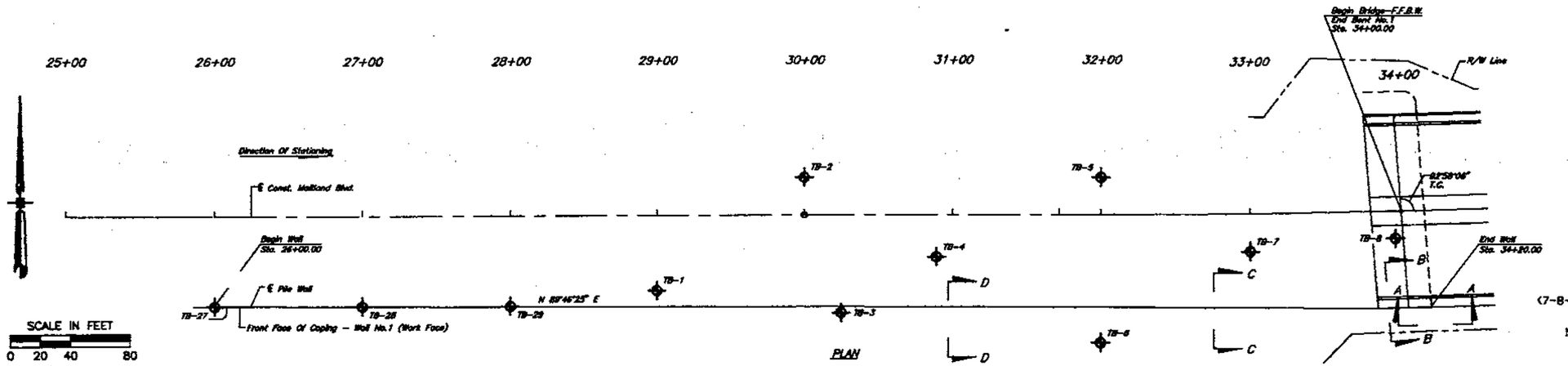

BOR. NO.: TB-27
STA. 26+00, 60.0' RT.
* ELEV. 80.0'

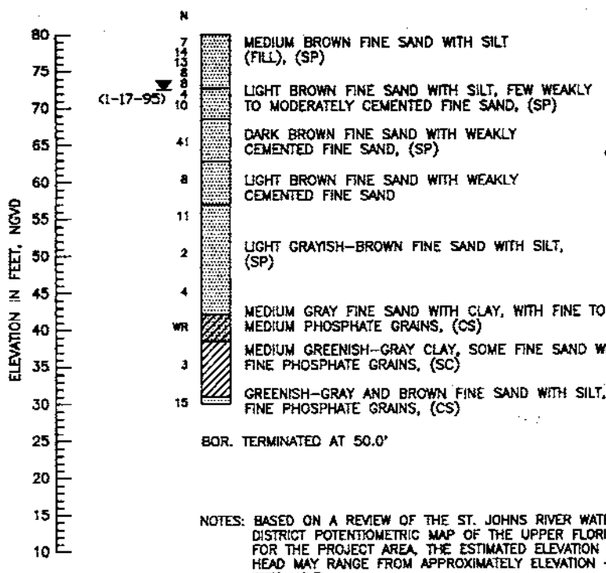

BOR. TERMINATED AT 50.0'

BOR. NO.: TB-28
STA. 27+00, 60.0' RT.
* ELEV. 73.5'

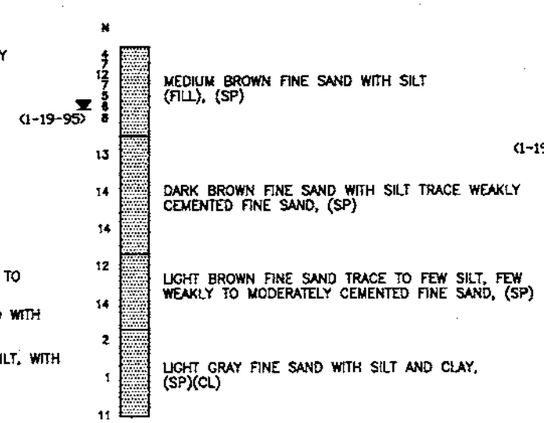

BOR. TERMINATED AT 50.0'

BOR. NO.: TB-29
STA. 28+00, 60.0' RT.
* ELEV. 68.0'

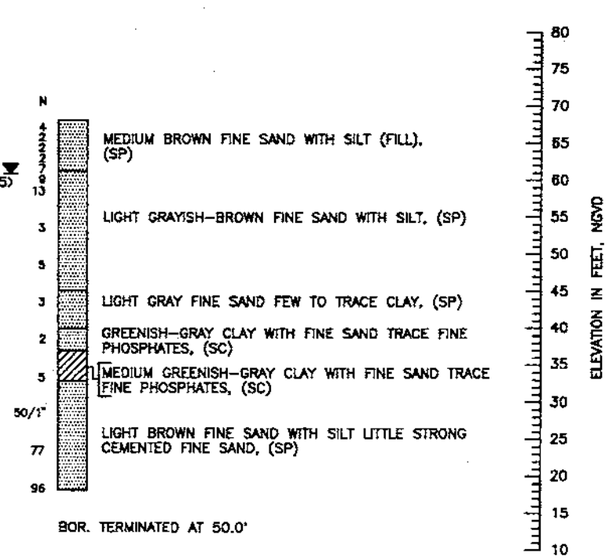

BOR. TERMINATED AT 50.0'

NOTES: BASED ON A REVIEW OF THE ST. JOHNS RIVER WATER MANAGEMENT DISTRICT POTENTIOMETRIC MAP OF THE UPPER FLORIDIAN AQUIFER FOR THE PROJECT AREA, THE ESTIMATED ELEVATION OF THE ARTESIAN HEAD MAY RANGE FROM APPROXIMATELY ELEVATION +45 TO +50 FEET NGVD.

SOIL DESCRIPTIONS ARE BASED ON VISUAL EXAMINATION OF THE RECOVERED SAMPLES, SUPPLEMENTED BY LIMITED LABORATORY TESTING. STRATA BOUNDARIES ARE APPROXIMATE AND ACTUAL TRANSITION MAY BE MORE GRADUAL THAN INDICATED.

LEGEND

- SAND
- CLAY
- (SP) UNIFIED SOIL CLASSIFICATION GROUP SYMBOL
- (7-8-91) WATER (DATE OF READING)
- N STANDARD PENETRATION RESISTANCE IN BLOWS PER FOOT UNLESS OTHERWISE NOTED
- WR FELL UNDER WEIGHT OF ROD AND HAMMER
- LOCATION OF STANDARD PENETRATION TEST BORING
- * SURVEY DATA TO BE CONSIDERED APPROXIMATE

NOTE: STRATA BOUNDARIES ARE APPROXIMATE AND MAY VARY BETWEEN OR AWAY FROM BORING LOCATIONS.

STANDARD PENETRATION TEST DATA

SPOON INSIDE DIA.	1 3/8 IN.
SPOON OUTSIDE DIA.	2 IN.
AVG. HAMMER DROP	30 IN.
HAMMER WEIGHT	140 LBS.
HAMMER TYPE	SAFETY

GRANULAR MATERIALS

RELATIVE DENSITY	SPT (BLOWS/FT.)
VERY LOOSE	LESS THAN 4
LOOSE	4–10
MEDIUM	10–30
DENSE	30–50
VERY DENSE	GREATER THAN 50

SILTS AND CLAYS

CONSISTENCY	SPT (BLOWS/FT.)
VERY SOFT	LESS THAN 2
SOFT	2–4
FIRM	4–8
STIFF	8–15
VERY STIFF	15–30
HARD	GREATER THAN 30

ENVIRONMENTAL CLASSIFICATION:

SUPERSTRUCTURE: SLIGHTLY AGGRESSIVE

SUBSTRUCTURE:
CONCRETE: EXTREMELY AGGRESSIVE (pH=4.3)
STEEL: EXTREMELY AGGRESSIVE (pH=4.3)

REVISIONS					
Date	By	Description	Date	By	Description

	Names	Dates
Drawn by	DNR	1-1-92
Checked by	GK	1-1-92
Designed by	N/A	N/A
Checked by	N/A	N/A
Approved by	LPM	

ENGINEER OF RECORD:
LARRY P. MOORE, P.E. #47673
PSI
1675 LEE ROAD
WINTER PARK, FLORIDA 32789

LOGO: PSI Environmental Geotechnical Construction Consulting • Engineering • Testing

SEAL: 3-4-98

FLORIDA DEPARTMENT OF TRANSPORTATION
STRUCTURES DESIGN OFFICE

ROAD NO.	COUNTY	PROJECT NO.
SR 414	SEMINOLE	77002-3503

SHEET TITLE: REPORT OF SPT BORINGS FOR STRUCTURE

Drawing No.

PROJECT NAME: MAITLAND BOULEVARD EXTENSION
S.R. 414 ; LAKE BOSSE BRIDGE

Index No.

PSI PROJECT No. 754-05260
FIGURE: 14

FED. ROAD NO.	STATE	PROJECT NO.	SHEET NO.
3	FLA.		W-3

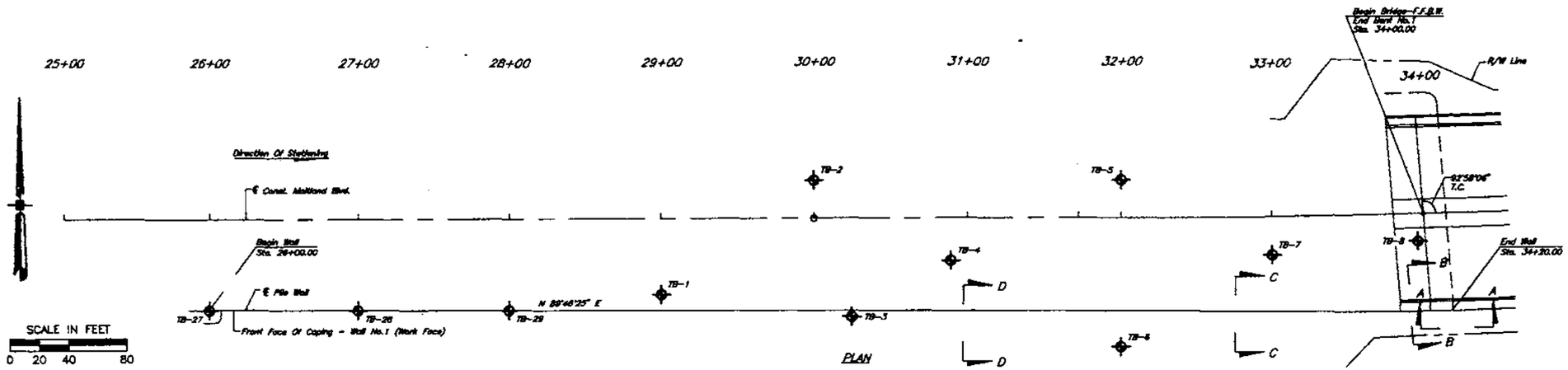

LEGEND

- SAND
- MUCK
- CLAY
- SILT
- (SP) UNIFIED SOIL CLASSIFICATION GROUP SYMBOL
- (7-8-91) WATER (WITH DATE OF READING)
- N STANDARD PENETRATION RESISTANCE IN BLOWS PER FOOT UNLESS OTHERWISE NOTED
- WR FELL UNDER WEIGHT OF ROD
- CIRCULATION LOSS
- * SURVEY DATA TO BE CONSIDERED APPROXIMATE
- APPROXIMATE LOCATION OF STANDARD PENETATION TEST BORING

STANDARD PENETRATION TEST DATA

SPOON INSIDE DIA.	1 3/8 IN.
SPOON OUTSIDE DIA.	2 IN.
AVG. HAMMER DROP	30 IN.
HAMMER WEIGHT	140 LBS.
HAMMER TYPE	SAFETY

NOTE: STRATA BOUNDARIES ARE APPROXIMATE AND MAY VARY BETWEEN OR AWAY FROM BORING LOCATIONS.

GRANULAR MATERIALS

RELATIVE DENSITY	SPT (BLOWS/FT.)
VERY LOOSE	LESS THAN 4
LOOSE	4-10
MEDIUM DENSE	10-30
DENSE	30-50
VERY DENSE	GREATER THAN 50

SILTS AND CLAYS

CONSISTENCY	SPT (BLOWS/FT.)
VERY SOFT	LESS THAN 2
SOFT	2-4
FIRM	4-8
STIFF	8-15
VERY STIFF	15-30
HARD	GREATER THAN 30

ENVIRONMENTAL CLASSIFICATION:

SUPERSTRUCTURE: SLIGHTLY AGGRESSIVE

SUBSTRUCTURE:
CONCRETE: EXTREMELY AGGRESSIVE (pH=4.3)
STEEL: EXTREMELY AGGRESSIVE (pH=4.3)

* BOR. NO.: TB-1
STA. 29+00, 50.0' RT.
ELEV. 66.0'

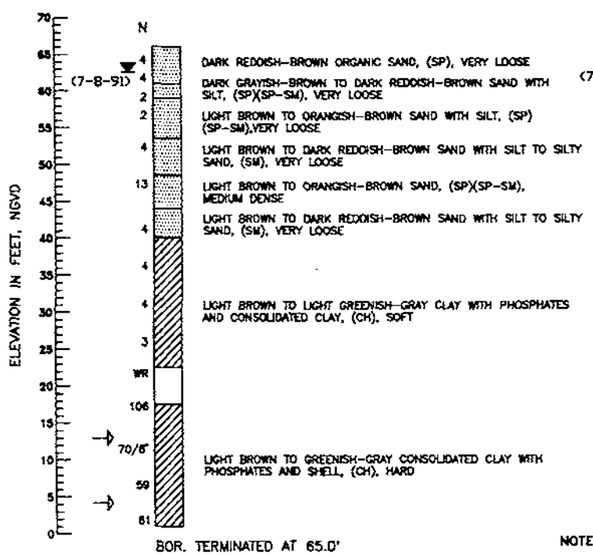

BOR. TERMINATED AT 65.0'
50.0' NW CASING

* BOR. NO.: TB-2
STA. 30+00, 25.0' LT.
ELEV. 69.5'

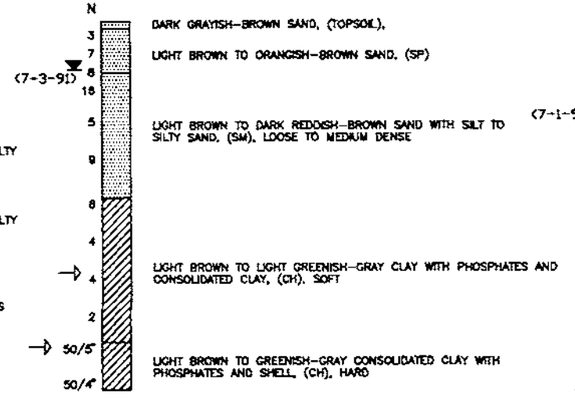

BOR. TERMINATED AT 50.0'
40.0' NW CASING

* BOR. NO.: TB-3
STA. 30+25, 65.0' RT.
ELEV. 61.5'

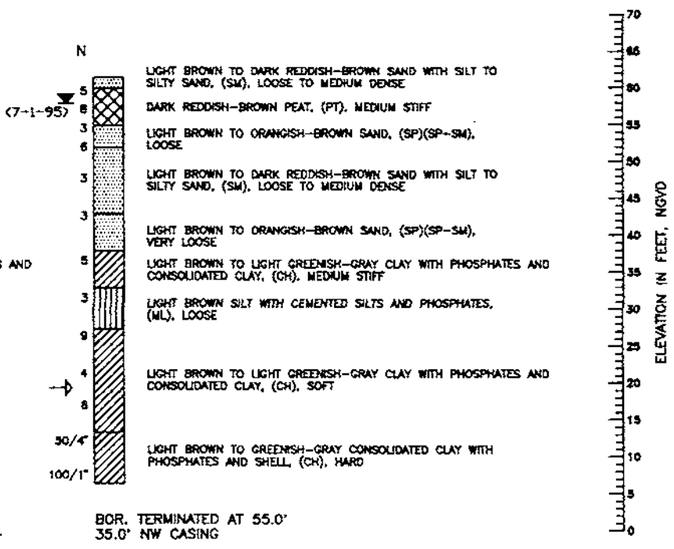

BOR. TERMINATED AT 55.0'
35.0' NW CASING

NOTES: BASED ON A REVIEW OF THE ST. JOHNS RIVER WATER MANAGEMENT DISTRICT POTENTIOMETRIC MAP OF THE UPPER FLORIDIAN AQUIFER FOR THE PROJECT AREA, THE ESTIMATED ELEVATION OF THE ARTESIAN HEAD MAY RANGE FROM APPROXIMATELY ELEVATION +45 TO +50 FEET NGVD.

SOIL DESCRIPTIONS ARE BASED ON VISUAL EXAMINATION OF THE RECOVERED SAMPLES, SUPPLEMENTED BY LIMITED LABORATORY TESTING. STRATA BOUNDARIES ARE APPROXIMATE AND ACTUAL TRANSITION MAY BE MORE GRADUAL THAN INDICATED.

REVISIONS

Date	By	Description	Date	By	Description

	Name	Date
Drawn by	D.W	1-1-92
Checked by	BK	1-1-92
Designed by	N/A	N/A
Checked by	N/A	N/A
Approved by	LPM	

ENGINEER OF RECORD:
LARRY P. MOORE, P.E. #47673
PSI
1675 LEE ROAD
WINTER PARK, FLORIDA 32789

LOGO: PSI Environmental Geotechnical Construction Consulting • Engineering • Testing

SEAL: 3-4-98

FLORIDA DEPARTMENT OF TRANSPORTATION
STRUCTURES DESIGN OFFICE

ROAD NO.	COUNTY	PROJECT NO.
SR 414	SEMINOLE	77002-3503

SHEET TITLE: REPORT OF SPT BORINGS FOR STRUCTURE

PROJECT NAME: MAITLAND BOULEVARD EXTENSION S.R. 414

Drawing No.

Index No.

PSI PROJECT No. 754-05260
FIGURE: 16

FED. ROAD NO.	STATE	PROJECT NO.	CHECK BY	SHEET NO.
3	FLA.			W-4

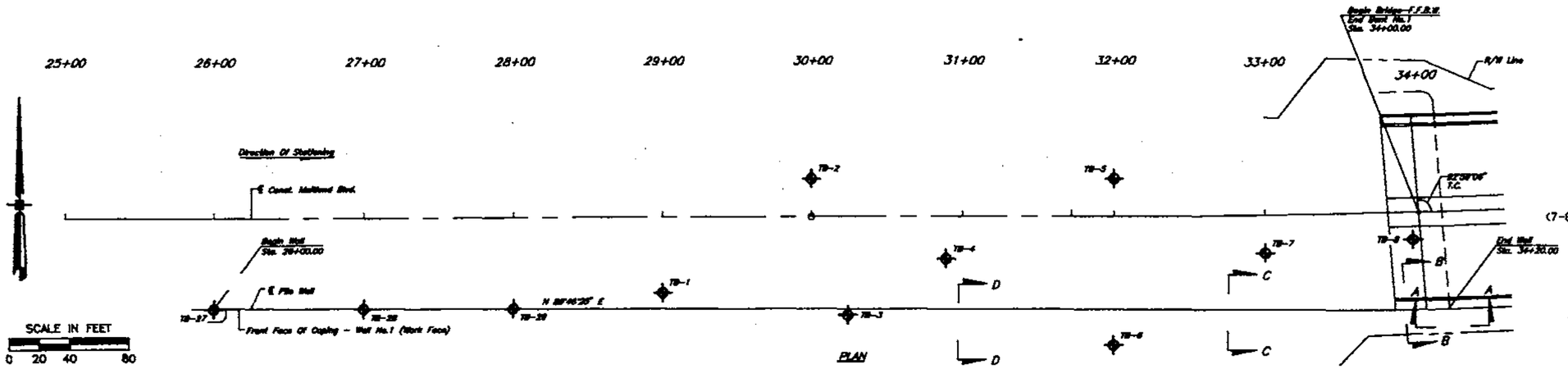

BOR. NO.: TB-4
• STA. 30+69, 28.0' RT.
ELEV. 62.4'

BOR. NO.: TB-5
• STA. 32+00, 25.0' LT.
ELEV. 66.0'

BOR. NO.: TB-6
STA. 32+00, 85.0' RT.
ELEV. 61.7'

LEGEND

- SAND
- MUCK
- CLAY
- CLAYEY SAND
- SILT
- (SP) UNIFIED SOIL CLASSIFICATION GROUP SYMBOL
- (7-8-91) WATER (WITH DATE OF READING)
- N STANDARD PENETRATION RESISTANCE IN BLOWS PER FOOT UNLESS OTHERWISE NOTED
- WR FELL UNDER WEIGHT OF ROD
- CIRCULATION LOSS
- • SURVEY DATA TO BE CONSIDERED APPROXIMATE

STANDARD PENETRATION TEST DATA

SPOON INSIDE DIA.	1 3/8 IN.
SPOON OUTSIDE DIA.	2 IN.
AVG. HAMMER DROP	30 IN.
HAMMER WEIGHT	140 LBS.
HAMMER TYPE	SAFETY

NOTE: STRATA BOUNDARIES ARE APPROXIMATE AND MAY VARY BETWEEN OR AWAY FROM BORING LOCATIONS.

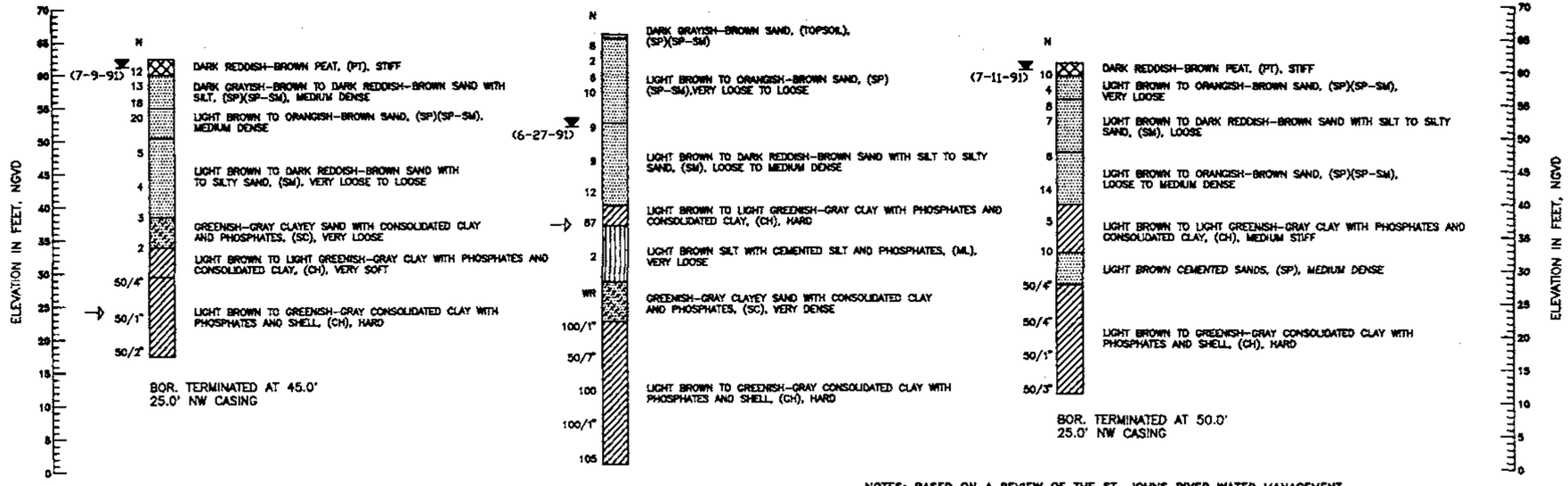

GRANULAR MATERIALS

RELATIVE DENSITY	SPT (BLOWS/FT.)
VERY LOOSE	LESS THAN 4
LOOSE	4–10
MEDIUM DENSE	10–30
DENSE	30–50
VERY DENSE	GREATER THAN 50

SILTS AND CLAYS

CONSISTENCY	SPT (BLOWS/FT.)
VERY SOFT	LESS THAN 2
SOFT	2–4
FIRM	4–8
STIFF	8–15
VERY STIFF	15–30
HARD	GREATER THAN 30

NOTES: BASED ON A REVIEW OF THE ST. JOHNS RIVER WATER MANAGEMENT DISTRICT POTENTIOMETRIC MAP OF THE UPPER FLORIDIAN AQUIFER FOR THE PROJECT AREA, THE ESTIMATED ELEVATION OF THE ARTESIAN HEAD MAY RANGE FROM APPROXIMATELY ELEVATION +45 TO +50 FEET NGVD.

SOIL DESCRIPTIONS ARE BASED ON VISUAL EXAMINATION OF THE RECOVERED SAMPLES, SUPPLEMENTED BY LIMITED LABORATORY TESTING. STRATA BOUNDARIES ARE APPROXIMATE AND ACTUAL TRANSITION MAY BE MORE GRADUAL THAN INDICATED.

ENVIRONMENTAL CLASSIFICATION:

SUPERSTRUCTURE: SLIGHTLY AGGRESSIVE

SUBSTRUCTURE:
CONCRETE: EXTREMELY AGGRESSIVE (pH=4.3)
STEEL: EXTREMELY AGGRESSIVE (pH=4.3)

REVISIONS

Date	By	Description	Date	By	Description

	Name	Date
Drawn by	DJW	1-1-92
Checked by	BK	1-1-92
Designed by	N/A	N/A
Checked by	N/A	N/A
Approved by	LPM	

ENGINEER OF RECORD:
LARRY P. MOORE, P.E. #47673
PSI
1675 LEE ROAD
WINTER PARK, FLORIDA 32789

LOGO: PSI Environmental Geotechnical Construction
Consulting • Engineering • Testing

SEAL: 3-4-98

FLORIDA DEPARTMENT OF TRANSPORTATION
STRUCTURES DESIGN OFFICE

ROAD NO.	COUNTY	PROJECT NO.
SR 414	SEMINOLE	77002-3503

SHEET TITLE: REPORT OF SPT BORINGS FOR STRUCTURE

PROJECT NAME: MAITLAND BOULEVARD EXTENSION S.R. 414

Drawing No.

Index No.

PSI PROJECT No. 754-05260
FIGURE: 15

FED. ROAD DIST. NO.	STATE	PROJECT NO.	SHEET NO.
3	FLA.		W-5

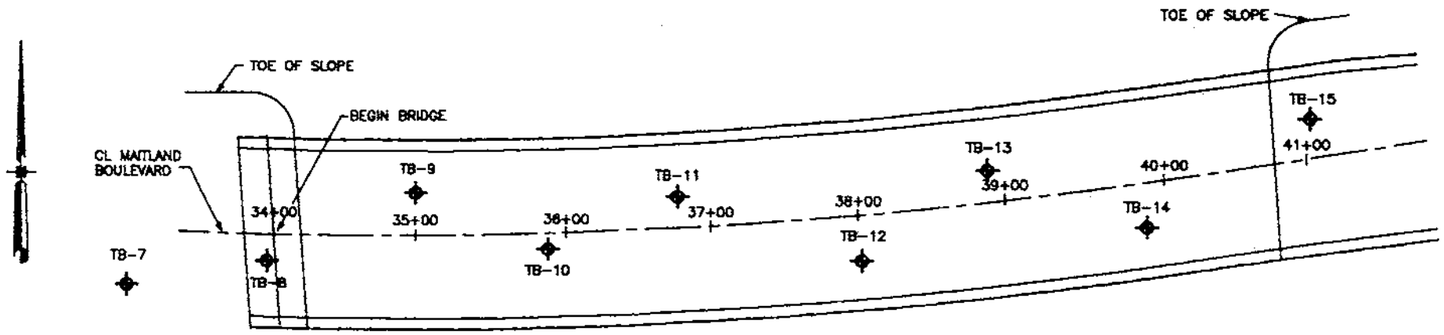

DISTANCE IN FEET
0 25 50 100

SECTION: 20
TOWNSHIP: 21 S
RANGE: 29 E

LEGEND

- SAND
- SILTY SAND
- CLAYEY SAND
- CLAY
- PEAT
- (SP) UNIFIED SOIL CLASSIFICATION GROUP SYMBOL
- (7-11-91) WATER (WITH DATE OF READING)
- N STANDARD PENETRATION RESISTANCE IN BLOWS PER FOOT UNLESS OTHERWISE NOTED
- WR FELL UNDER WEIGHT OF ROD
- CIRCULATION LOSS
- LOCATION OF STANDARD PENETRATION TEST BORING
- * SURVEY DATA TO BE CONSIDERED APPROXIMATE
- -200=0 FINES PASSING #200 SIEVE IN PERCENT
- OC=0 ORGANIC CONTENT IN PERCENT
- LL=0 LIQUID LIMIT IN PERCENT
- PL=0 PLASTIC LIMIT IN PERCENT

BOR. NO.: TB-7
* STA. 33+00, 25.0' RT.
ELEV. 66.0'

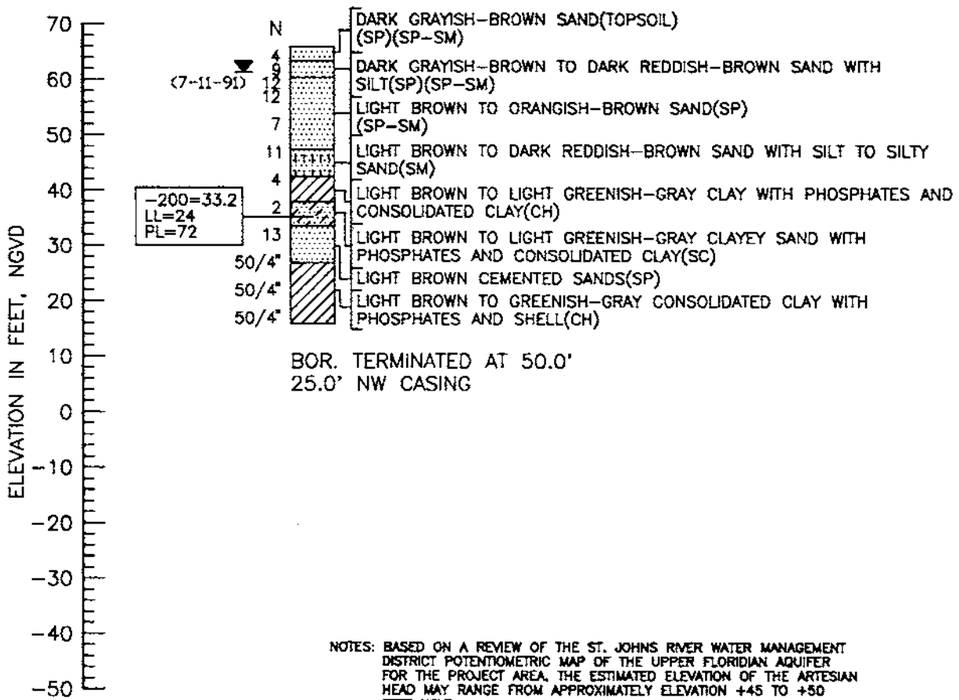

BOR. TERMINATED AT 50.0'
25.0' NW CASING

BOR. NO.: TB-8
STA. 33+96, 18.0' RT.
ELEV. 60.1'

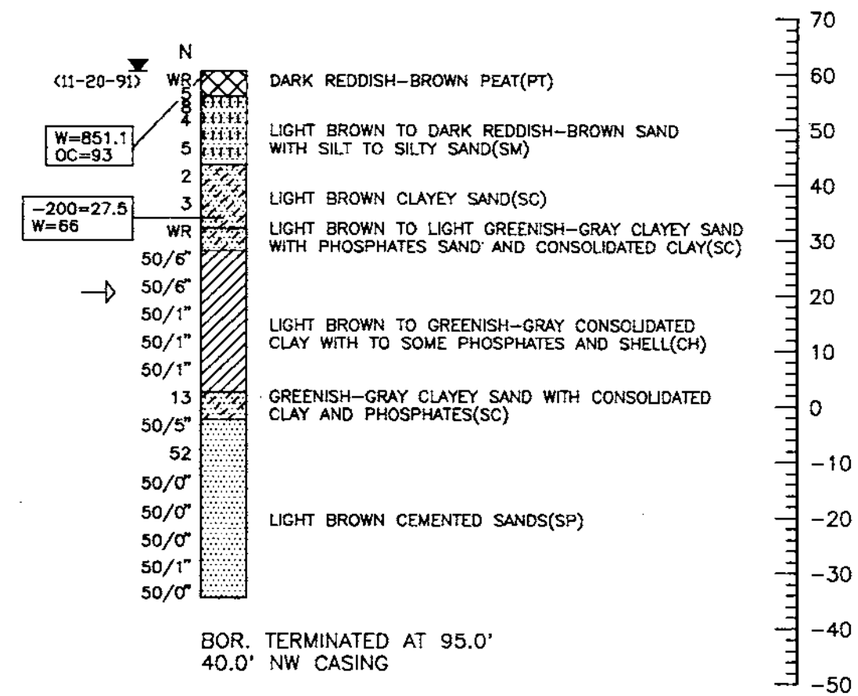

BOR. TERMINATED AT 95.0'
40.0' NW CASING

NOTES: BASED ON A REVIEW OF THE ST. JOHNS RIVER WATER MANAGEMENT DISTRICT POTENTIOMETRIC MAP OF THE UPPER FLORIDIAN AQUIFER FOR THE PROJECT AREA, THE ESTIMATED ELEVATION OF THE ARTESIAN HEAD MAY RANGE FROM APPROXIMATELY ELEVATION +45 TO +50 FEET NGVD.

SOIL DESCRIPTIONS ARE BASED ON VISUAL EXAMINATION OF THE RECOVERED SAMPLES, SUPPLEMENTED BY LIMITED LABORATORY TESTING. STRATA BOUNDARIES ARE APPROXIMATE AND ACTUAL TRANSITION MAY BE MORE GRADUAL THAN INDICATED.

STANDARD PENETRATION TEST DATA

SPOON INSIDE DIA.	1 3/8 IN.
SPOON OUTSIDE DIA.	2 IN.
AVG. HAMMER DROP	30 IN.
HAMMER WEIGHT	140 LBS.
HAMMER TYPE	SAFETY

NOTE: STRATA BOUNDARIES ARE APPROXIMATE AND MAY VARY BETWEEN OR AWAY FROM BORING LOCATIONS.

GRANULAR MATERIALS

RELATIVE DENSITY	SPT (BLOWS/FT.)
VERY LOOSE	LESS THAN 4
LOOSE	4-10
MEDIUM DENSE	10-30
DENSE	30-50
VERY DENSE	GREATER THAN 50

SILTS AND CLAYS

CONSISTENCY	SPT (BLOWS/FT.)
VERY SOFT	LESS THAN 2
SOFT	2-4
FIRM	4-8
STIFF	8-15
VERY STIFF	15-30
HARD	GREATER THAN 30

ENVIRONMENTAL CLASSIFICATION:

SUPERSTRUCTURE: SLIGHTLY AGGRESSIVE

SUBSTRUCTURE:
CONCRETE: EXTREMELY AGGRESSIVE (pH=4.3)
STEEL: EXTREMELY AGGRESSIVE (pH=4.3)

REVISIONS

Date	By	Description	Date	By	Description

	Name	Date
Drawn by	DJW	1-1-92
Checked by	GK	1-1-92
Designed by	N/A	N/A
Checked by	N/A	N/A
Approved by	JWC	

ENGINEER OF RECORD:
JAY W. CASPER, P.E. #36330
PSI
1675 LEE ROAD
WINTER PARK, FLORIDA 32789

LOGO: PSI Environmental Geotechnical Construction Consulting • Engineering • Testing

SEAL: #7673 3-4-98

FLORIDA DEPARTMENT OF TRANSPORTATION
GEOTECHNICAL DESIGN OFFICE

ROAD NO.	COUNTY	PROJECT NO.
SR 414	SEMINOLE	77002-3503

SHEET TITLE: REPORT OF SPT BORINGS FOR STRUCTURE

PROJECT NAME: MAITLAND BOULEVARD EXTENSION
S.R. 414 ; LAKE BOSSE BRIDGE

Drawing No.

Index No.

PSI PROJECT No. 754-05260
FIGURE: 18

FED. ROAD DIV. NO.	STATE	PROJECT NO.	FOLIO NUMBER	SHEET NO.
3	FLA.			W-6

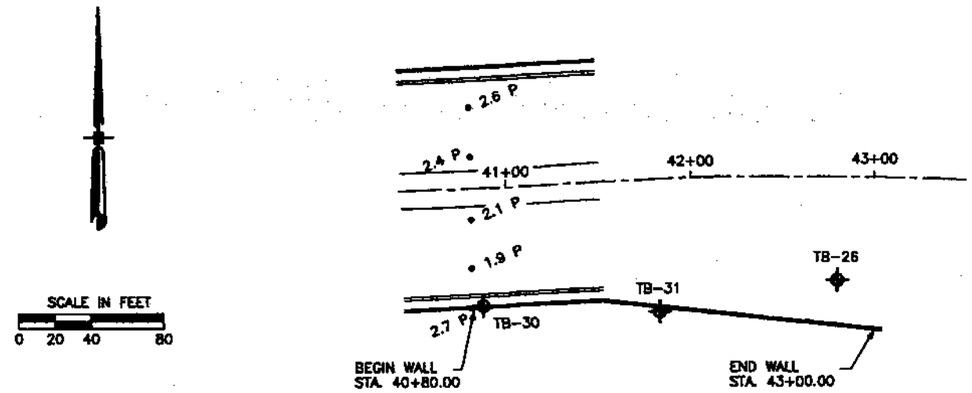

LEGEND

- SAND
- SILT
- CLAY
- MUCK

(SP) UNIFIED SOIL CLASSIFICATION GROUP SYMBOL

(1-25-95) WATER (WITH DATE OF READING)

N STANDARD PENETRATION RESISTANCE IN BLOWS PER FOOT UNLESS OTHERWISE NOTED

WR FELL UNDER WEIGHT OF ROD

LOCATION OF STANDARD PENETRATION TEST BORING

STANDARD PENETRATION TEST DATA

SPOON INSIDE DIA.	1 3/8 IN.
SPOON OUTSIDE DIA.	2 IN.
AVG. HAMMER DROP	30 IN.
HAMMER WEIGHT	140 LBS.
HAMMER TYPE	SAFETY

NOTE: STRATA BOUNDARIES ARE APPROXIMATE AND MAY VARY BETWEEN OR AWAY FROM BORING LOCATIONS.

GRANULAR MATERIALS

RELATIVE DENSITY	SPT (BLOWS/FT.)
VERY LOOSE	LESS THAN 4
LOOSE	4–10
MEDIUM DENSE	10–30
DENSE	30–50
VERY DENSE	GREATER THAN 50

SILTS AND CLAYS

CONSISTENCY	SPT (BLOWS/FT.)
VERY SOFT	LESS THAN 2
SOFT	2–4
FIRM	4–8
STIFF	8–15
VERY STIFF	15–30
HARD	GREATER THAN 30

ENVIRONMENTAL CLASSIFICATION:

SUPERSTRUCTURE: SLIGHTLY AGGRESSIVE

SUBSTRUCTURE:
CONCRETE: EXTREMELY AGGRESSIVE (pH=4.3)
STEEL: EXTREMELY AGGRESSIVE (pH=4.3)

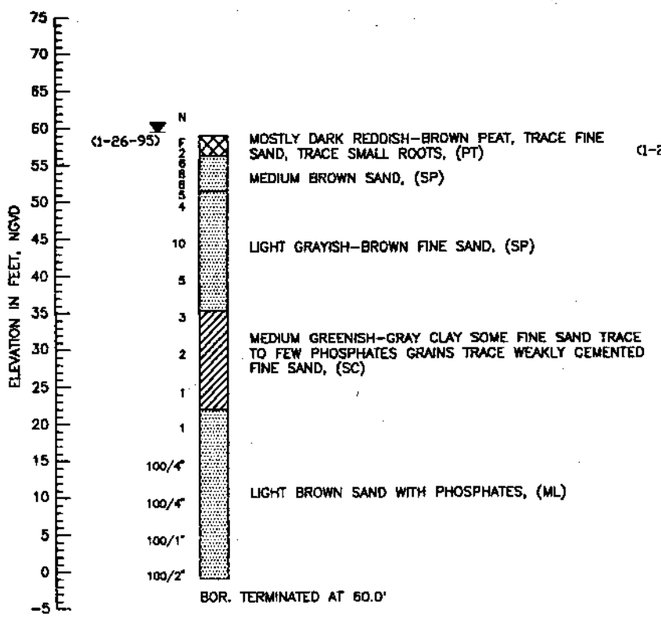

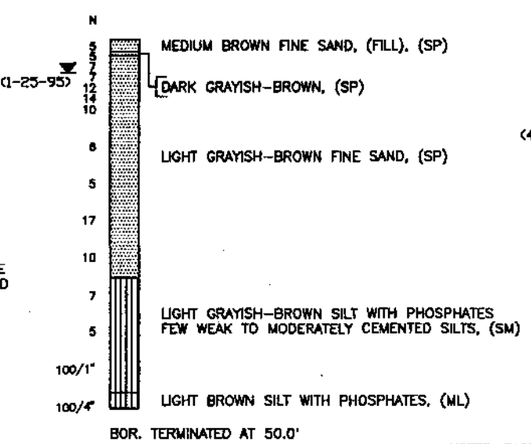

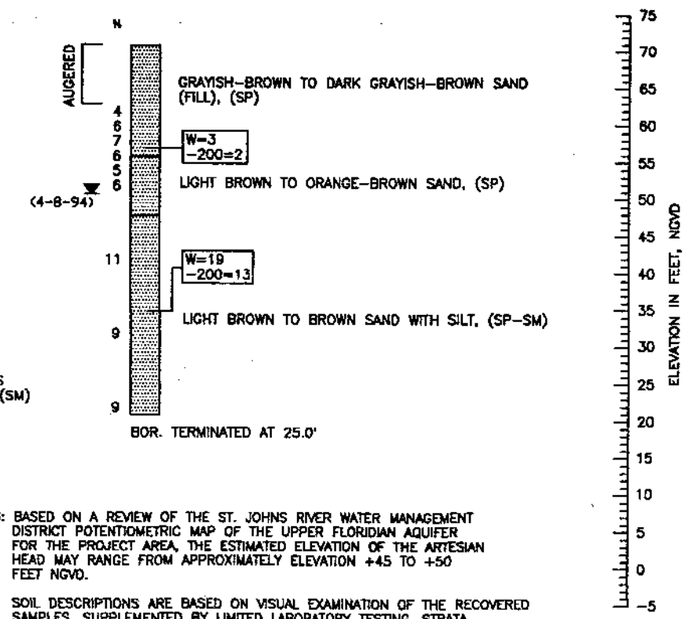

NOTES: BASED ON A REVIEW OF THE ST. JOHNS RIVER WATER MANAGEMENT DISTRICT POTENTIOMETRIC MAP OF THE UPPER FLORIDIAN AQUIFER FOR THE PROJECT AREA, THE ESTIMATED ELEVATION OF THE ARTESIAN HEAD MAY RANGE FROM APPROXIMATELY ELEVATION +45 TO +50 FEET NGVD.

SOIL DESCRIPTIONS ARE BASED ON VISUAL EXAMINATION OF THE RECOVERED SAMPLES, SUPPLEMENTED BY LIMITED LABORATORY TESTING. STRATA BOUNDARIES ARE APPROXIMATE AND ACTUAL TRANSITION MAY BE MORE GRADUAL THAN INDICATED.

REVISIONS

Date	By	Description	Date	By	Description

	Names	Dates
Drawn by	DJW	1-1-92
Checked by	GK	1-1-93
Designed by	N/A	N/A
Checked by	N/A	N/A
Approved by	LPM	

ENGINEER OF RECORD:
LARRY P. MOORE, P.E. #47673
PSI
1875 LEE ROAD
WINTER PARK, FLORIDA 32789

LOGO: Environmental Geotechnical Construction — Consulting • Engineering • Testing

SEAL: 3-4-98

FLORIDA DEPARTMENT OF TRANSPORTATION
GEOTECHNICAL DESIGN OFFICE

ROAD NO.	COUNTY	PROJECT NO.
SR 414	SEMINOLE	77002-3503

SHEET TITLE: REPORT OF SPT BORINGS FOR STRUCTURE

PROJECT NAME: MAITLAND BOULEVARD EXTENSION
S.R. 414 ; LAKE BOSSE BRIDGE

Drawing No.

Index No.

PSI PROJECT No. 754-05260
FIGURE: 17

FED. ROAD DIST. NO.	STATE	PROJECT NO.	FINAL SHEET	SHEET NO.
	FLA.			W-7

SECTION: 21
TOWNSHIP: 21 SOUTH
RANGE: 29 EAST

0 30 60 120
SCALE IN FEET

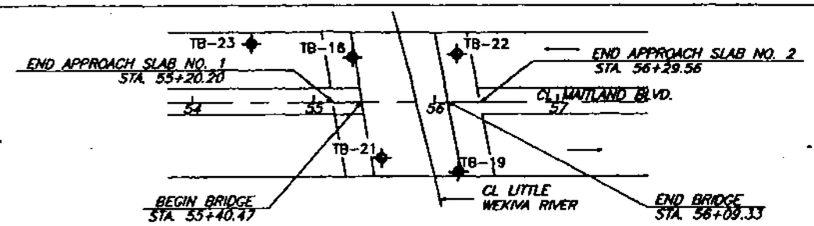

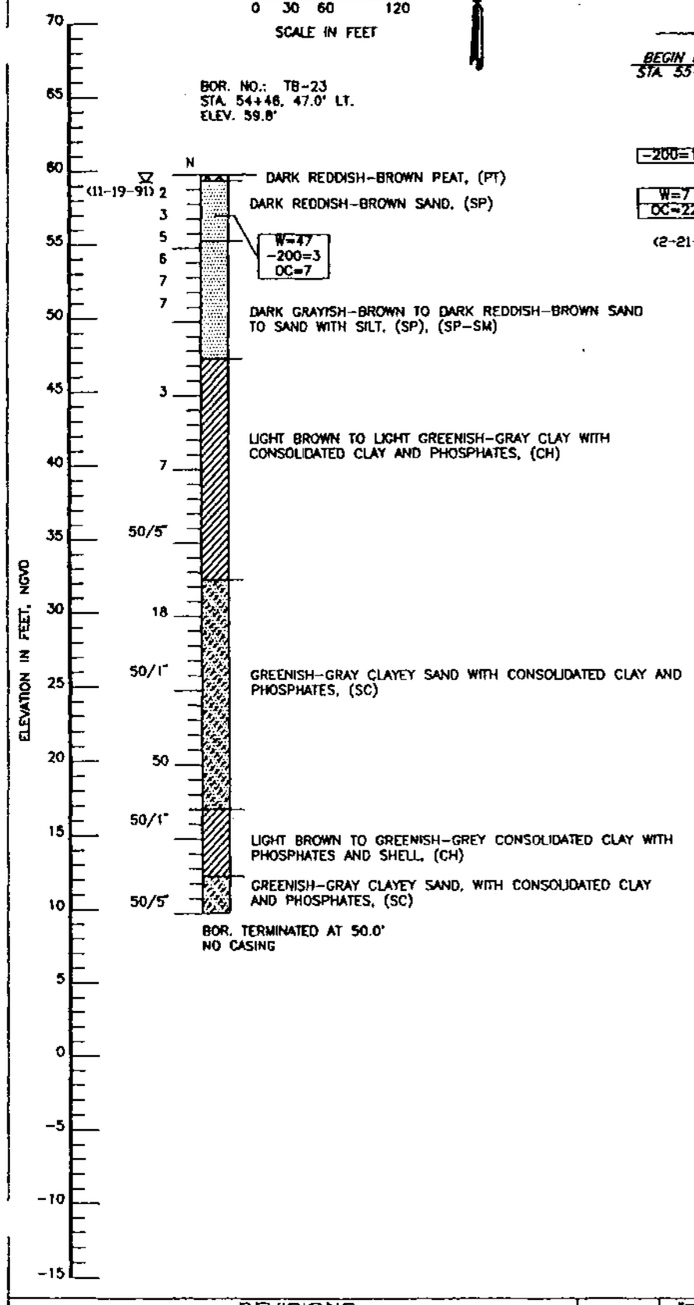

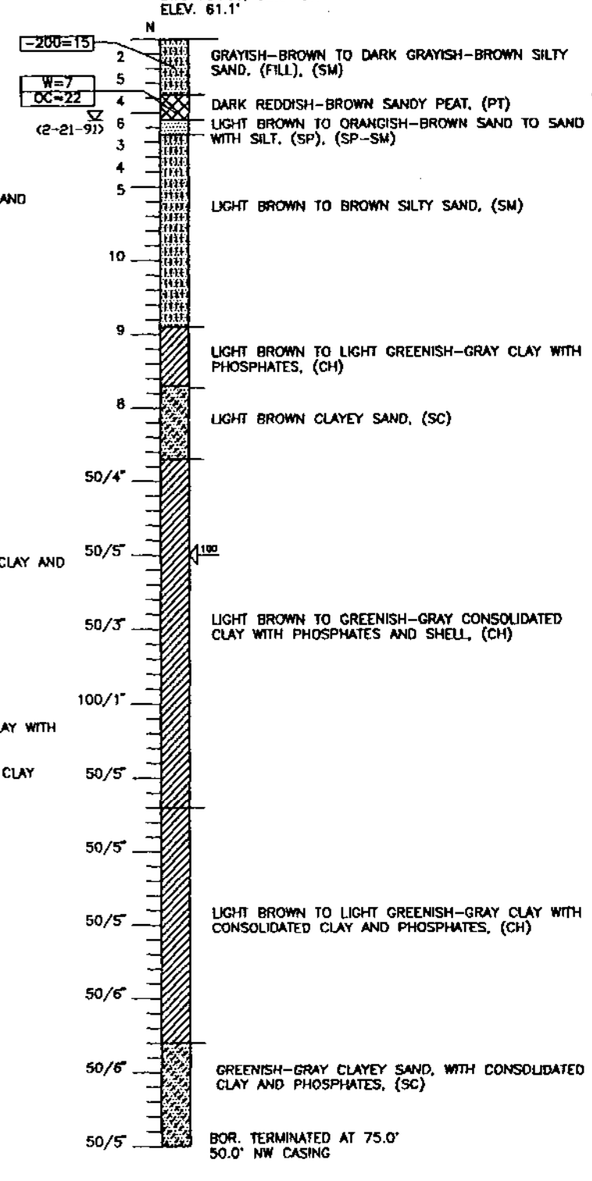

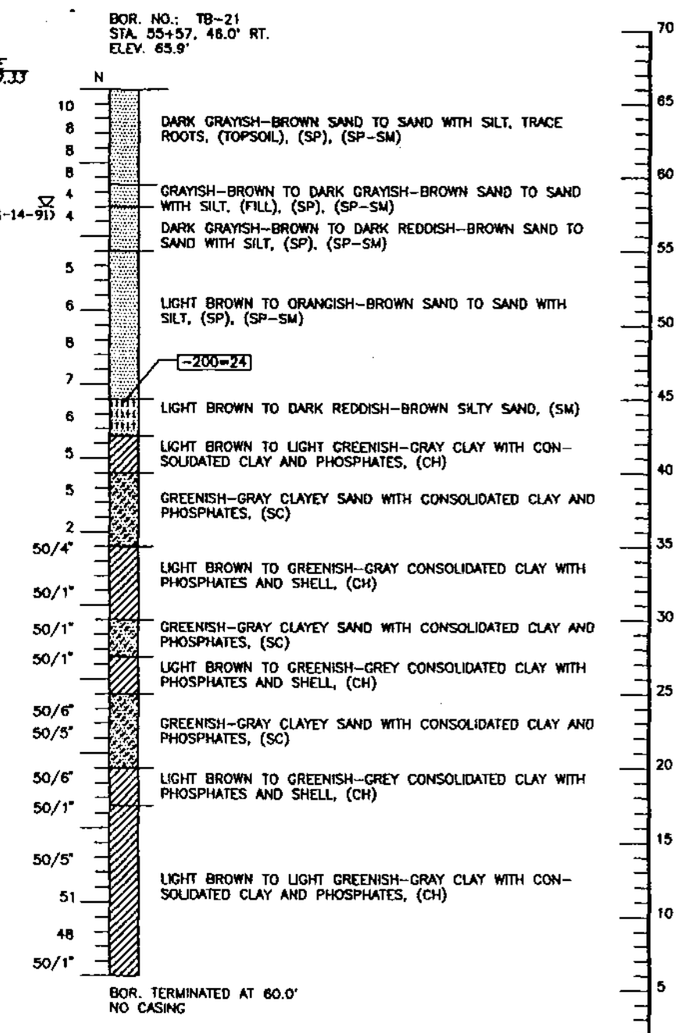

NOTES: BASED ON A REVIEW OF THE ST. JOHNS RIVER WATER MANAGEMENT DISTRICT POTENTIOMETRIC MAP OF THE UPPER FLORIDIAN AQUIFER FOR THE PROJECT AREA, THE ESTIMATED ELEVATION OF THE ARTESIAN HEAD MAY RANGE FROM APPROXIMATELY ELEVATION +45 TO +50 FEET NGVD.

SOIL DESCRIPTIONS ARE BASED ON VISUAL EXAMINATION OF THE RECOVERED SAMPLES, SUPPLEMENTED BY LIMITED LABORATORY TESTING. STRATA BOUNDARIES ARE APPROXIMATE AND ACTUAL TRANSITION MAY BE MORE GRADUAL THAN INDICATED AT, BETWEEN AND AWAY FROM BORINGS.

LEGEND

- MUCK/PEAT
- SAND
- SILTY SAND
- CLAY
- CLAYEY SAND
- (SP) UNIFIED SOIL CLASSIFICATION GROUP SYMBOL
- (11-14-91) WATER TABLE LEVEL (WITH DATE OF READING)
- N STANDARD PENETRATION RESISTANCE IN BLOWS PER FOOT, UNLESS OTHERWISE NOTED
- LOCATION OF STANDARD PENETRATION TEST BORING
- CIRCULATION LOSS (%)
- W=47, -200=3, OC=7: NATURAL MOISTURE CONTENT (%), FINES PASSING No. 200 SIEVE (%), ORGANIC CONTENT (%)

STANDARD PENETRATION TEST DATA

SPOON INSIDE DIA.	1 3/8 IN.
SPOON OUTSIDE DIA.	2 IN.
AVG. HAMMER DROP	30 IN.
HAMMER WEIGHT	140 LBS.

HAMMER TYPE: SAFETY HAMMER

GRANULAR MATERIALS

RELATIVE DENSITY	SPT (BLOWS/FT.)
VERY LOOSE	LESS THAN 4
LOOSE	4-10
MEDIUM DENSE	10-30
DENSE	30-50
VERY DENSE	GREATER THAN 50

SILTS AND CLAYS

CONSISTENCY	SPT (BLOWS/FT.)
VERY SOFT	LESS THAN 2
SOFT	2-4
FIRM	4-8
STIFF	8-15
VERY STIFF	15-30
HARD	GREATER THAN 30

ENVIRONMENTAL CLASSIFICATION:

SUPERSTRUCTURE: SLIGHTLY AGGRESSIVE

SUBSTRUCTURE:
CONCRETE: EXTREMELY AGGRESSIVE (pH=4.7)
STEEL: EXTREMELY AGGRESSIVE (pH=4.7)

REVISIONS					
Date	By	Description	Date	By	Description

	Name	Date
Drawn by	WCJ	12-18-91
Checked by	GK	12-18-91
Designed by	N/A	N/A
Checked by	N/A	N/A
Approved by	LPM	

ENGINEER OF RECORD:
LARRY P. MOORE, P.E. #47673
PSI
1675 LEE ROAD
WINTER PARK, FLORIDA 32789

LOGO: Environmental Geotechnical Construction
Consulting • Engineering • Testing

SEAL: 3-4-98

FLORIDA DEPARTMENT OF TRANSPORTATION
GEOTECHNICAL DESIGN OFFICE

ROAD NO.	COUNTY	PROJECT NO.
SR 414	SEMINOLE	77002-3503

SHEET TITLE: REPORT OF SPT BORINGS FOR STRUCTURE

PROJECT NAME: LITTLE WEKIVA RIVER BRIDGE
S.R. 414

Drawing No.

Index No.

PSI PROJECT No. 754-05260
FIGURE 3

	FLA.			W-8

SECTION: 21
TOWNSHIP: 21 SOUTH
RANGE: 29 EAST

0 30 60 120
SCALE IN FEET

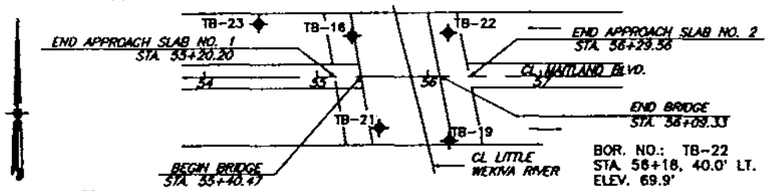

BOR. NO.: TB-19
STA. 56+15, 57.0' RT.
ELEV. 66.7'

BOR. NO.: TB-22
STA. 56+18, 40.0' LT.
ELEV. 69.9'

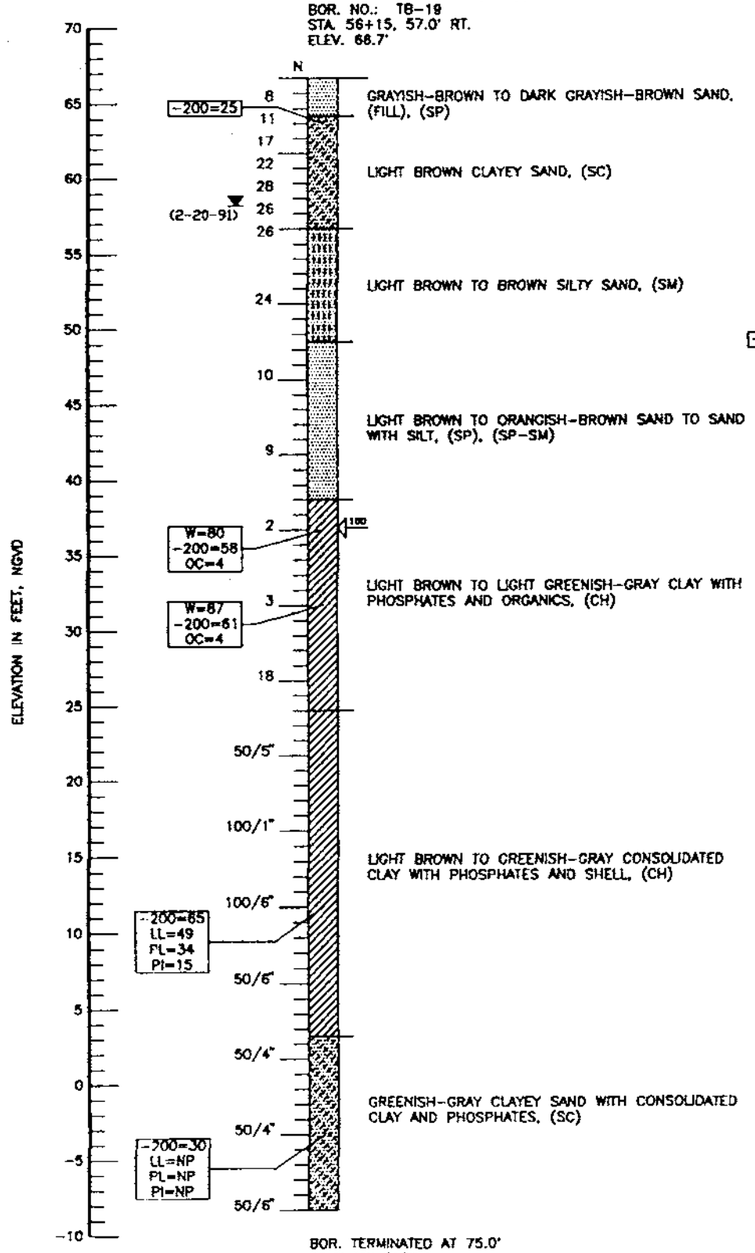

BOR. TERMINATED AT 75.0'
65.0' NW CASING

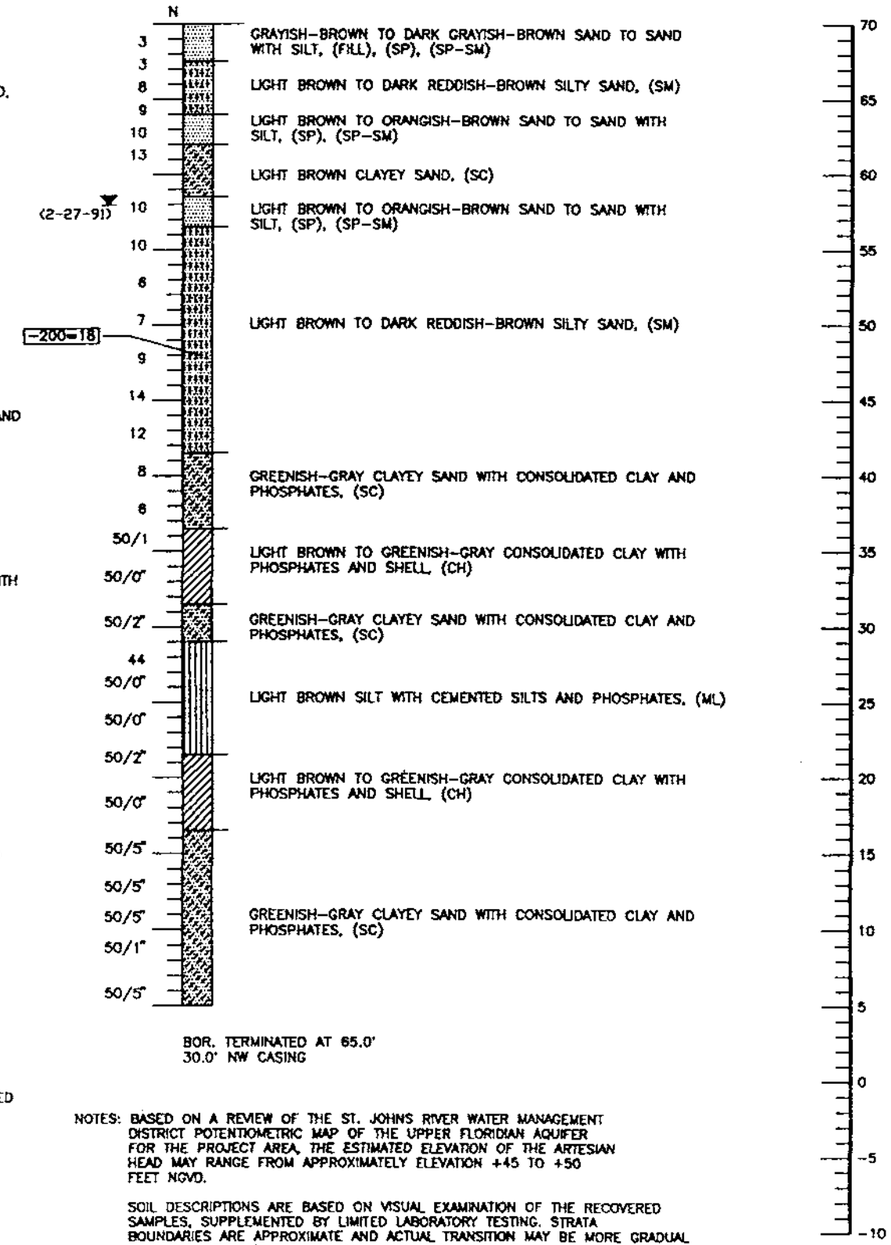

BOR. TERMINATED AT 65.0'
30.0' NW CASING

NOTES: BASED ON A REVIEW OF THE ST. JOHNS RIVER WATER MANAGEMENT DISTRICT POTENTIOMETRIC MAP OF THE UPPER FLORIDIAN AQUIFER FOR THE PROJECT AREA, THE ESTIMATED ELEVATION OF THE ARTESIAN HEAD MAY RANGE FROM APPROXIMATELY ELEVATION +45 TO +50 FEET NGVD.

SOIL DESCRIPTIONS ARE BASED ON VISUAL EXAMINATION OF THE RECOVERED SAMPLES, SUPPLEMENTED BY LIMITED LABORATORY TESTING. STRATA BOUNDARIES ARE APPROXIMATE AND ACTUAL TRANSITION MAY BE MORE GRADUAL THAN INDICATED AT, BETWEEN AND AWAY FROM BORINGS.

LEGEND

- SAND
- SILTY SAND
- SILT
- CLAY
- CLAYEY SAND

(SP) UNIFIED SOIL CLASSIFICATION GROUP SYMBOL

2-20-91 WATER TABLE LEVEL (WITH DATE OF READING)

N STANDARD PENETRATION RESISTANCE IN BLOWS PER FOOT UNLESS OTHERWISE NOTED

CIRCULATION LOSS (%)

W=80	NATURAL MOISTURE CONTENT (%)
-200=58	FINES PASSING No. 200 SIEVE (%)
OC=4	ORGANIC CONTENT (%)
LL=34	LIQUID LIMIT
PL=34	PLASTIC LIMIT
PI=15	PLASTICITY INDEX

STANDARD PENETRATION TEST DATA

SPOON INSIDE DIA.	1 3/8 IN.
SPOON OUTSIDE DIA.	2 IN.
AVG. HAMMER DROP	30 IN.
HAMMER WEIGHT	140 LBS.
HAMMER TYPE:	SAFETY

GRANULAR MATERIALS

RELATIVE DENSITY	SPT (BLOWS/FT.)
VERY LOOSE	LESS THAN 4
LOOSE	4-10
MEDIUM DENSE	10-30
DENSE	30-50
VERY DENSE	GREATER THAN 50

SILTS AND CLAYS

CONSISTENCY	SPT (BLOWS/FT.)
VERY SOFT	LESS THAN 2
SOFT	2-4
FIRM	4-8
STIFF	8-15
VERY STIFF	15-30
HARD	GREATER THAN 30

ENVIRONMENTAL CLASSIFICATION:

SUPERSTRUCTURE: SLIGHTLY AGGRESSIVE

SUBSTRUCTURE:
CONCRETE: EXTREMELY AGGRESSIVE (pH=4.7)
STEEL: EXTREMELY AGGRESSIVE (pH=4.7)

REVISIONS

Date	By	Description	Date	By	Description

	Name	Date
Drawn by	SEJJI	12-27-91
Checked by	GK	12-27-91
Designed by	N/A	N/A
Checked by	N/A	N/A
Approved by	LPM	

ENGINEER OF RECORD:
LARRY P. MOORE, P.E. #47673
PSI
1875 LEE ROAD
WINTER PARK, FLORIDA 32789

LOGO: PSI Environmental Geotechnical Construction
Consulting • Engineering • Testing

SEAL: 3-4-98

FLORIDA DEPARTMENT OF TRANSPORTATION
GEOTECHNICAL DESIGN OFFICE

ROAD NO.	COUNTY	PROJECT NO.
SR 414	SEMINOLE	77002-3503

SHEET TITLE: REPORT OF CORE BORINGS FOR STRUCTURE

PROJECT NAME: LITTLE WEKIVA RIVER BRIDGE
S.R. 414

Drawing No.

Index No.

PSI PROJECT No. 754-03280
FIGURE: 4

FED. RD. DIV. NO.	STATE	PROJECT NO.	FISCAL YEAR	SHEET NO.
3	FLA.	75011-3508		W-8a

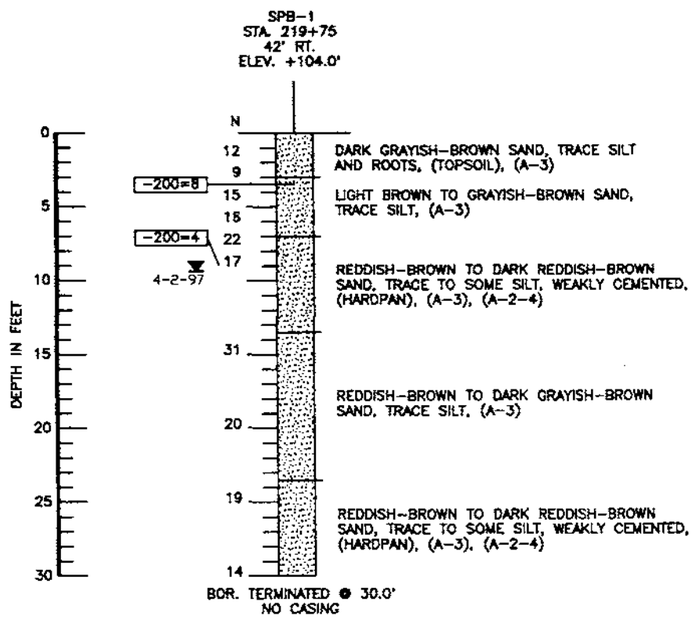

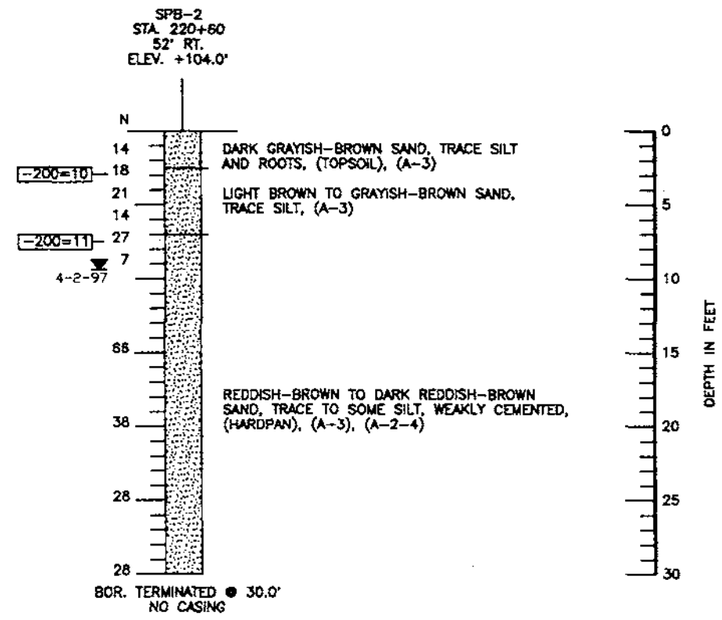

LEGEND

SAND

(SP) UNIFIED SOIL CLASSIFICATION GROUP SYMBOL

4-2-97 WATER (WITH DATE OF READING)

N STANDARD PENETRATION RESISTANCE IN BLOWS PER FOOT UNLESS OTHERWISE NOTED

-200=0 FINES PASSING No. 200 SIEVE (%) (FM 1-T 011)

ELEV. ELEVATIONS ESTIMATED BASED ON ROADWAY CROSS-SECTIONS

STANDARD PENETRATION TEST DATA

SPOON INSIDE DIA.	1 3/8 IN.
SPOON OUTSIDE DIA.	2 IN.
AVG. HAMMER DROP	30 IN.
HAMMER WEIGHT	140 LBS.
HAMMER TYPE	SAFETY

GRANULAR MATERIALS

RELATIVE DENSITY	SPT (BLOWS/FT.)
VERY LOOSE	LESS THAN 4
LOOSE	4-10
MEDIUM DENSE	10-30
DENSE	30-50
VERY DENSE	GREATER THAN 50

SILTS AND CLAYS

CONSISTENCY	SPT (BLOWS/FT.)
VERY SOFT	LESS THAN 2
SOFT	2-4
FIRM	4-8
STIFF	8-15
VERY STIFF	15-30
HARD	GREATER THAN 30

NOTES: BASED ON A REVIEW OF THE ST. JOHNS RIVER WATER MANAGEMENT DISTRICT POTENTIOMETRIC MAP OF THE UPPER FLORIDIAN AQUIFER FOR THE PROJECT AREA, THE ESTIMATED ELEVATION OF THE ARTESIAN HEAD MAY RANGE FROM APPROXIMATELY ELEVATION +45 TO +50 FEET NGVD.

STRATA BOUNDARIES ARE APPROXIMATE AND MAY VARY BETWEEN OR AWAY FROM BORING LOCATIONS. SUBSURFACE VARIATIONS BETWEEN BORINGS SHOULD BE ANTICIPATED AS INDICATED IN SECTION 2-4 OF THE STANDARD SPECIFICATIONS.

REVISIONS

Date	By	Description	Date	By	Description

	Name	Date
Drawn by	DJW	4-1-97
Checked by	RT	4-1-97
Designed by	N/A	N/A
Checked by	N/A	N/A
Approved by	LPM	

ENGINEER OF RECORD:
LARRY P. MOORE, P.E. #47673
PSI
1675 LEE ROAD
WINTER PARK, FLORIDA 32789

LOGO: PSI Environmental Geotechnical Construction Consulting • Engineering • Testing

SEAL: 3-4-98

FLORIDA DEPARTMENT OF TRANSPORTATION
GEOTECHNICAL DESIGN OFFICE

ROAD NO.	COUNTY	PROJECT NO.
SR 414	ORANGE	75011-3508

SHEET TITLE: REPORT OF SPT BORINGS FOR STRUCTURE

PROJECT NAME: RETAINING WALL
MAITLAND BOULEVARD (S.R. 414)

Drawing No.

Index No.

PSI PROJECT No. 757-05259
SHEET: 1

FED. ROAD DIV. NO.	STATE	PROJECT NO.	FISCAL YEAR	SHEET NO.
3	FLA.		98	W-9

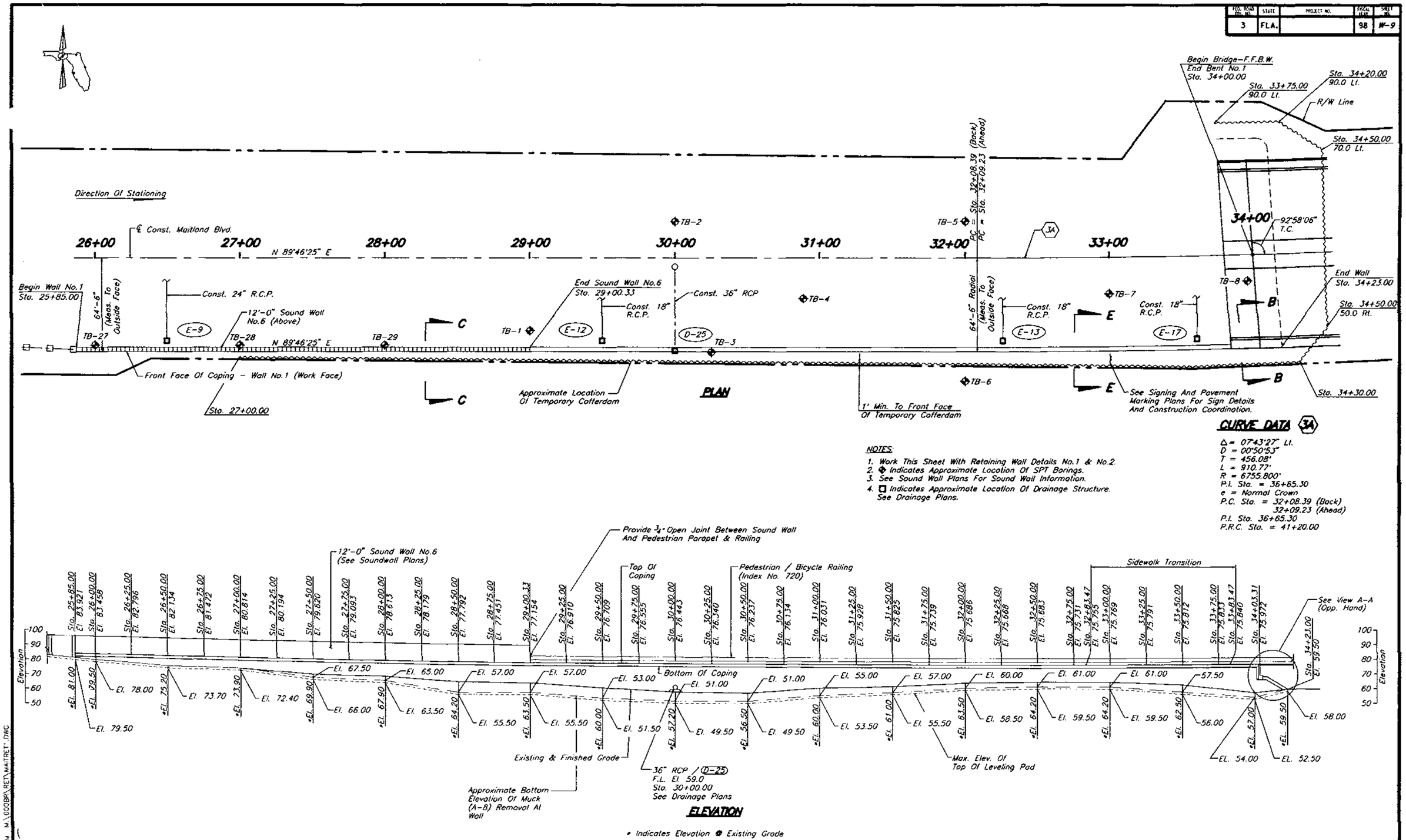

REVISIONS					
Date	By	Description	Date	By	Description

	Names	Dates
Drawn by	M.A./J.J.S	3/96
Checked by	MKA	3/96
Designed by	MKA	3/96
Checked by	PM	3/96
Approved by	Peeter Mannik, P.E.	

ENGINEER OF RECORD:
DYER, RIDDLE, MILLS AND PRECOURT, INC.
1505 EAST COLONIAL DRIVE
ORLANDO, FLORIDA 32803

LOGO: DRMP DYER, RIDDLE, MILLS & PRECOURT, INC. ENGINEERS · SURVEYORS

SEAL: Peeter Mannik 3/4/98

FLORIDA DEPARTMENT OF TRANSPORTATION
STRUCTURES DESIGN OFFICE

ROAD NO.	COUNTY	PROJECT NO.
SR414	SEMINOLE	77002-3503

SHEET TITLE: **RETAINING WALL NO.1 ALIGNMENT**

PROJECT NAME: **MAITLAND BOULEVARD**

Drawing No.

Index No.

JA/.S04/07/97 3:03PM M:\000BR\RET\MAITRET.DWG

FED. ROAD DIV. NO.	STATE	PROJECT NO.	FISCAL YEAR	SHEET NO.
3	FLA.		98	W-10

CURVE DATA (3A)

Δ = 07°43'27" Lt.
D = 00°50'53"
T = 456.08'
L = 910.77'
R = 6755.80'
P.I. Sta. = 36+65.30
e = Normal Crown
P.C. Sta. = 32+08.39 (Back)
32+09.23 (Ahead)
P.I. Sta. 36+65.30
P.R.C. Sta. = 41+20.00

CURVE DATA (4A)

Δ = 8°22'17" Rt.
D = 1°38'13"
T = 256.15'
L = 511.39'
R = 3500.00'
P.R.C. Sta. = 41+20.00
P.I. Sta. 43+76.15
P.T. Sta. = 46+31.39
e = Normal Crown

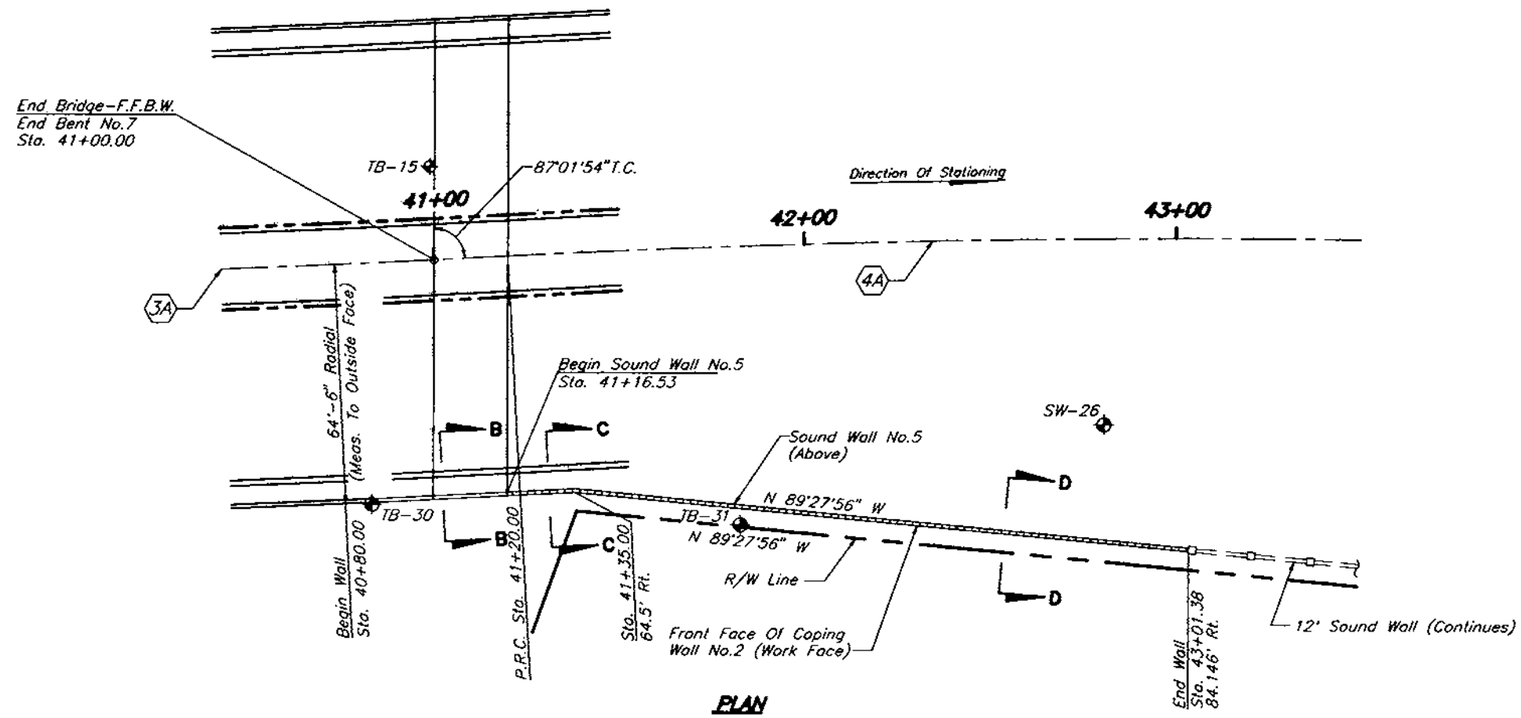

PLAN

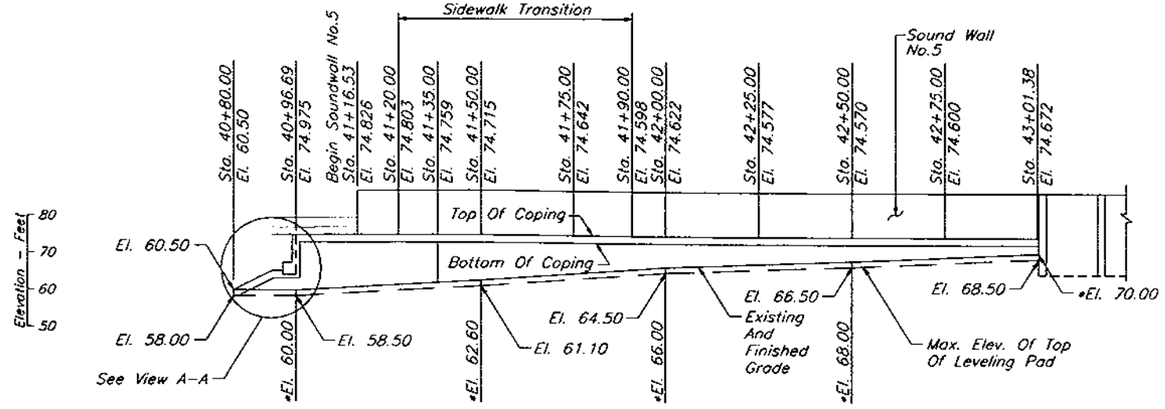

ELEVATION

* Indicates Elevation @ Existing Grade

NOTES:

1. Work This Sheet With Retaining Wall Details No.1 & No.2 .
2. ◆ Indicates Approximate Location Of SPT Borings.
3. See Sound Wall Plans For Sound Wall Information.

REVISIONS					
Date	By	Description	Date	By	Description

	Names	Dates
Drawn by	JLA/JJS	3/96
Checked by	MKA	3/96
Designed by	MKA	3/96
Checked by	PM	3/96
Approved by	Peeter Mannik, P.E.	

ENGINEER OF RECORD:
DYER, RIDDLE, MILLS AND PRECOURT, INC.
1505 EAST COLONIAL DRIVE
ORLANDO, FLORIDA 32803

LOGO: DRMP DYER, RIDDLE, MILLS & PRECOURT, INC. ENGINEERS · SURVEYORS

SEAL: Peeter Mannik 3/4/98

FLORIDA DEPARTMENT OF TRANSPORTATION
STRUCTURES DESIGN OFFICE

ROAD NO.	COUNTY	PROJECT NO.
SR414	SEMINOLE	77002-3503

SHEET TITLE: **RETAINING WALL NO.2 ALIGNMENT**

PROJECT NAME: **MAITLAND BOULEVARD**

Drawing No.

Index No.

FED. ROAD DIV. NO.	STATE	PROJECT NO.	FISCAL YEAR	SHEET NO.
3	FLA.		98	W-11

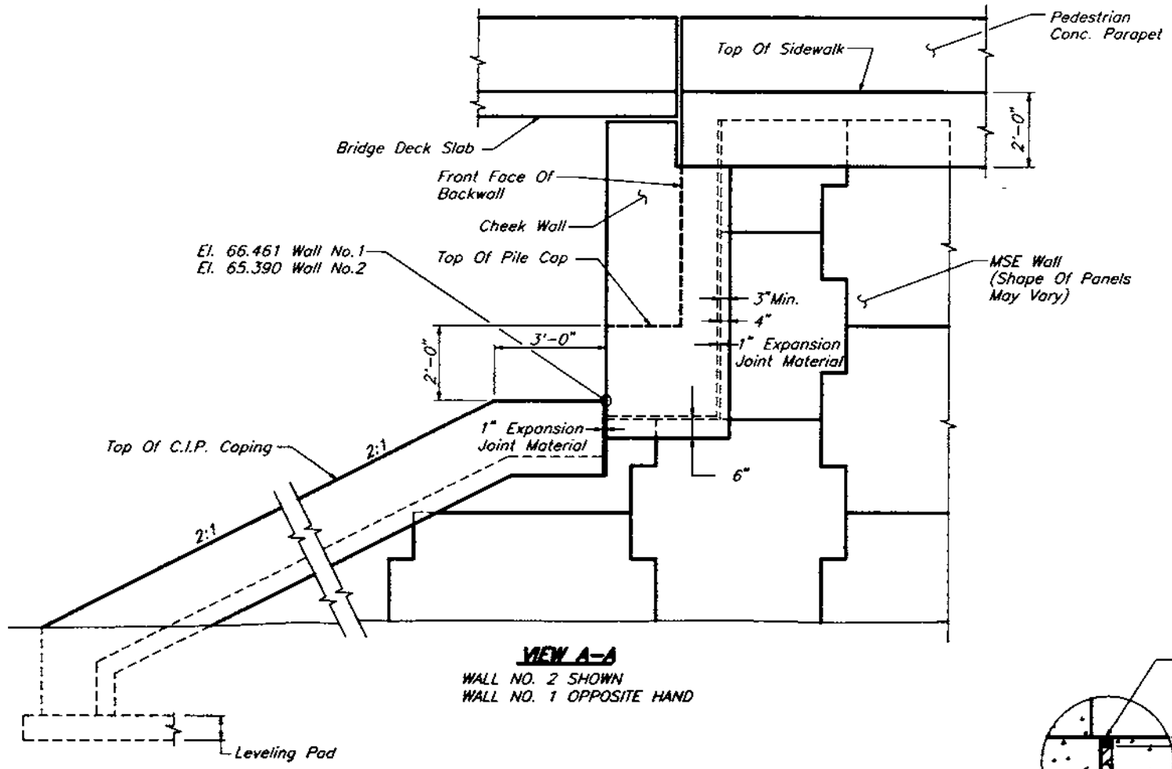

VIEW A-A

WALL NO. 2 SHOWN
WALL NO. 1 OPPOSITE HAND

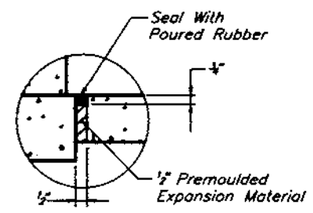

DETAIL AT JOINT

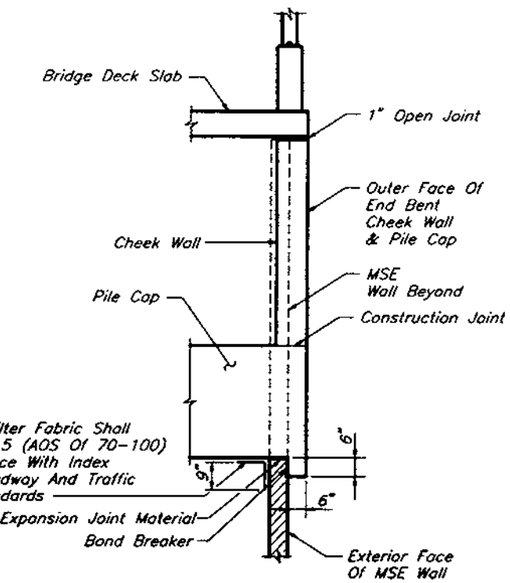

SECTION F-F

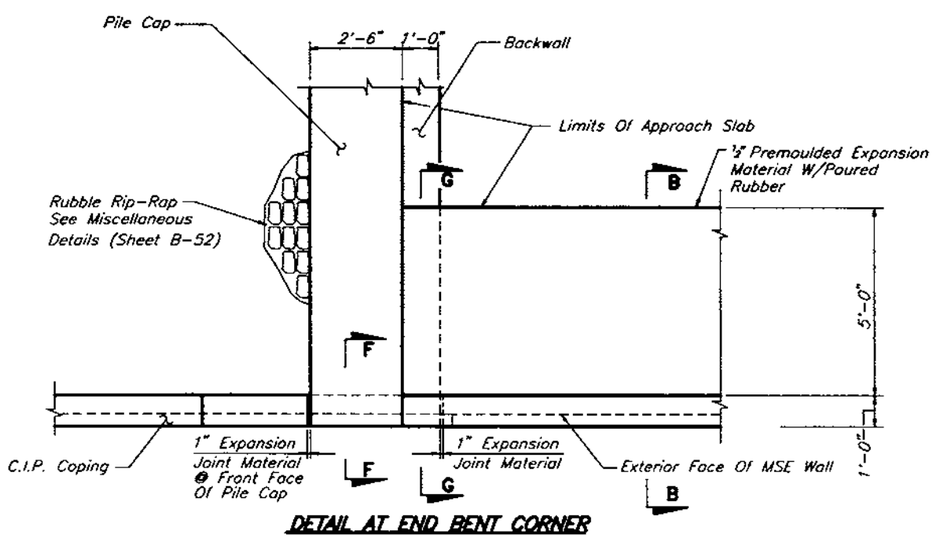

DETAIL AT END BENT CORNER

WALL NO. 2 SHOWN
WALL NO. 1 OPPOSITE HAND

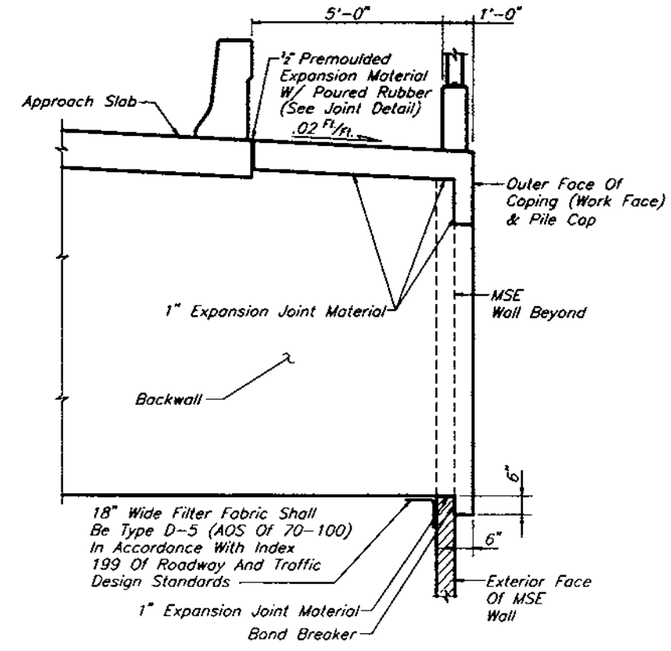

SECTION G-G

REVISIONS						
Date	By	Description	Date	By	Description	

	Names	Dates
Drawn by	JLA/JJS	3/96
Checked by	MKA	3/96
Designed by	MKA	3/96
Checked by	PM	3/96
Approved by	Peeter Mannik, P.E.	

ENGINEER OF RECORD:
DYER, RIDDLE, MILLS AND PRECOURT, INC.
1505 EAST COLONIAL DRIVE
ORLANDO, FLORIDA 32803

LOGO: DRMP — DYER, RIDDLE, MILLS & PRECOURT, INC. ENGINEERS · SURVEYORS

SEAL: Peeter Mannik 3/4/98

FLORIDA DEPARTMENT OF TRANSPORTATION
STRUCTURES DESIGN OFFICE

ROAD NO.	COUNTY	PROJECT NO.
SR414	SEMINOLE	77002-3503

SHEET TITLE: **RETAINING WALL DETAILS NO.1 & NO.2**

Drawing No. **1 OF 2**

PROJECT NAME: **MAITLAND BOULEVARD**

Index No.

JA/JS02/10/97 09:12AM M:\DOOBR\RET\MAITRDT2.DWG

FED. ROAD DIV. NO.	STATE	PROJECT NO.	FISCAL YEAR	SHEET NO.
3	FLA.		98	W-12

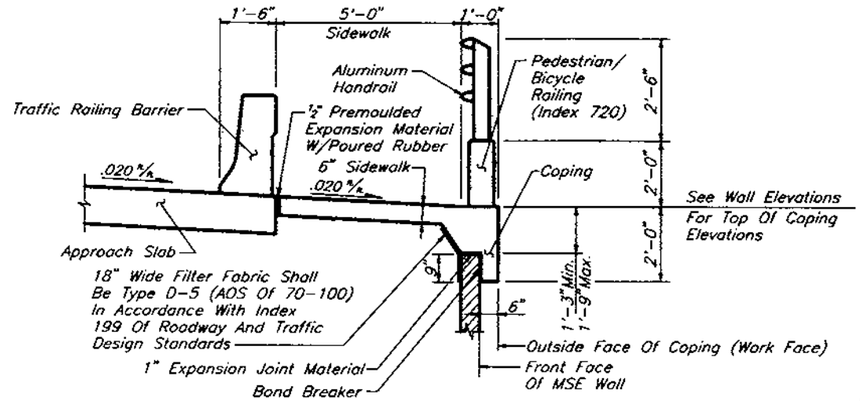

SECTION B-B
PEDESTRIAN RAIL
AT APPROACH SLAB
Sta. 33+83.47 To Sta. 34+03.31 (WALL NO.1)
Sta. 40+96.69 To Sta. 41+16.53 (WALL NO.2)

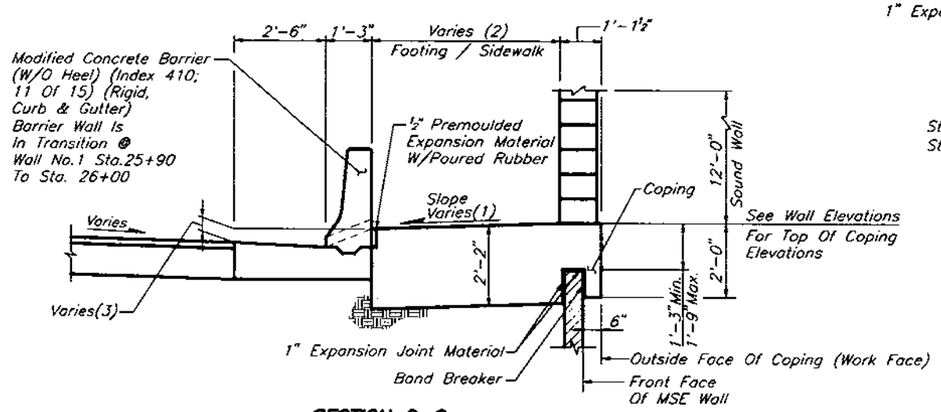

SECTION C-C
AT ROADWAY

WALL NO. 1

(1) STA. 25+85.00 TO STA. 29+00.33, .020%
(2) STA. 25+85.00 TO STA. 26+00.00, 7'-4½" TO 5'-1½"
STA. 26+00.00 TO STA. 29+00.33, 5'-1½"
(3) STA. 26+00.00 TO STA. 29+00.33, 4½"

WALL NO. 2

(1) STA. 40+16.53 TO STA. 41+20.00, .020%
STA. 41+20.00 TO STA. 41+90.00, .020% TO .020%
(2) STA. 40+16.53 TO STA. 41+35.00, 5'-1½"
STA. 41+35.00 TO STA. 41+90.00, 5'-1½" TO 7'-6"
(3) STA. 41+16.53 TO STA. 41+20.00, 0"
STA. 41+20.00 TO STA. 41+90.00, 0" TO 4½"

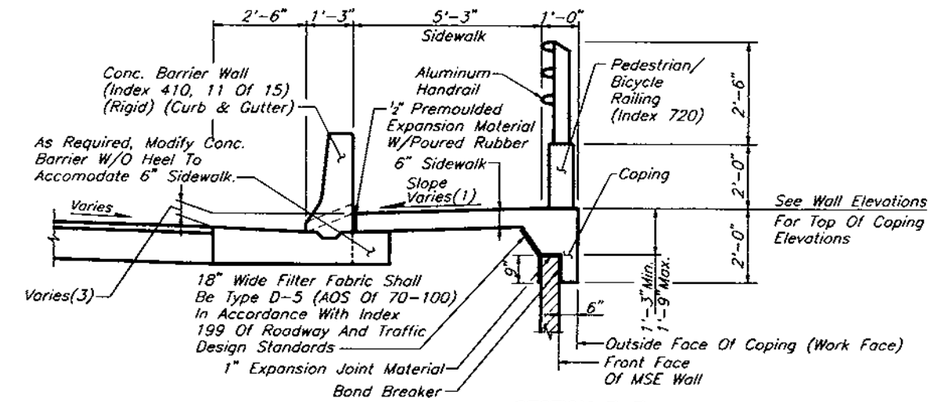

SECTION E-E
PEDESTRIAN RAIL
AT ROADWAY

(1) STA. 29+00.33 TO STA. 32+83.47 (WALL NO. 1), .020%
STA. 32+83.47 TO STA. 33+83.47 (WALL NO. 1), .020% TO .020%
(2) STA. 29+00.33 TO STA. 32+83.47 (WALL NO. 1), 4½"
STA. 32+83.47 TO STA. 33+83.47 (WALL NO. 1), 4½" TO 0"

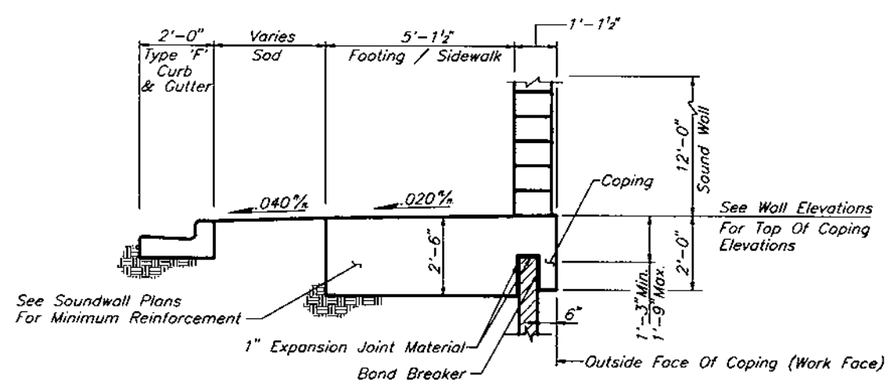

SECTION D-D
AT ROADWAY
STA. 41+90.00 TO STA. 43+01.38 WALL NO. 2

REVISIONS					
Date	By	Description	Date	By	Description

	Names	Dates
Drawn by	JLA/JJS	3/96
Checked by	MKA	3/96
Designed by	MKA	3/96
Checked by	PM	3/96
Approved by	Peeter Mannik, P.E.	

ENGINEER OF RECORD:
DYER, RIDDLE, MILLS AND PRECOURT, INC.
1508 EAST COLONIAL DRIVE
ORLANDO, FLORIDA 32803

LOGO: DRMP DYER, RIDDLE, MILLS & PRECOURT, INC. ENGINEERS · SURVEYORS

SEAL: Peeter Mannik 3/4/98

FLORIDA DEPARTMENT OF TRANSPORTATION
STRUCTURES DESIGN OFFICE

ROAD NO.	COUNTY	PROJECT NO.
SR414	SEMINOLE	77002-3503

SHEET TITLE: **RETAINING WALL DETAILS NO.1 & NO.2**
Drawing No. **2 OF 2**
PROJECT NAME: **MAITLAND BOULEVARD**
INDEX NO.

JA/JS04/07/97 10:19AM M:\000BRK\RET\MAITROT2.DWG

FED. ROAD DIV. NO.	STATE	PROJECT NO.	FISCAL YEAR	SHEET NO.
3	FLA.		98	W-13

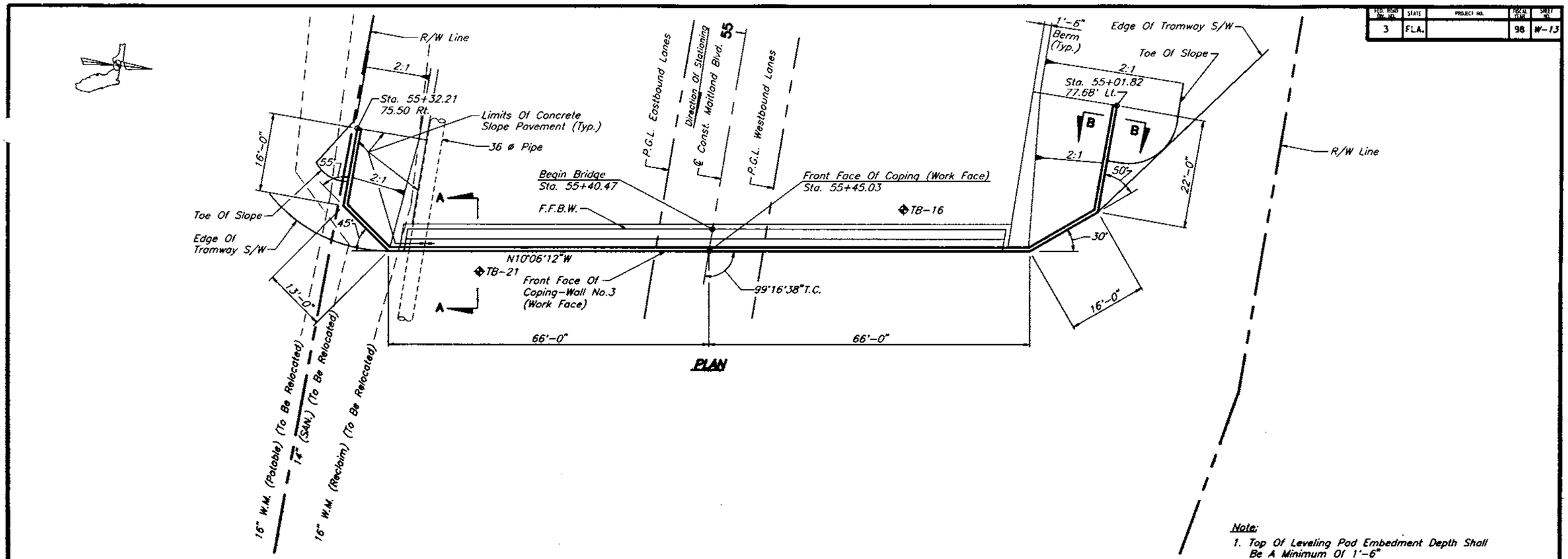

PLAN

Note:

1. Top Of Leveling Pad Embedment Depth Shall Be A Minimum Of 1'-6"
2. ◆ Indicates Approximate Location Of SPT Borings.
3. See Retaining Wall Details Wall No.3 & No.4 For Sections A-A And B-B.
4. See Miscellaneous Details For Rubble Rip-Rap Limits.

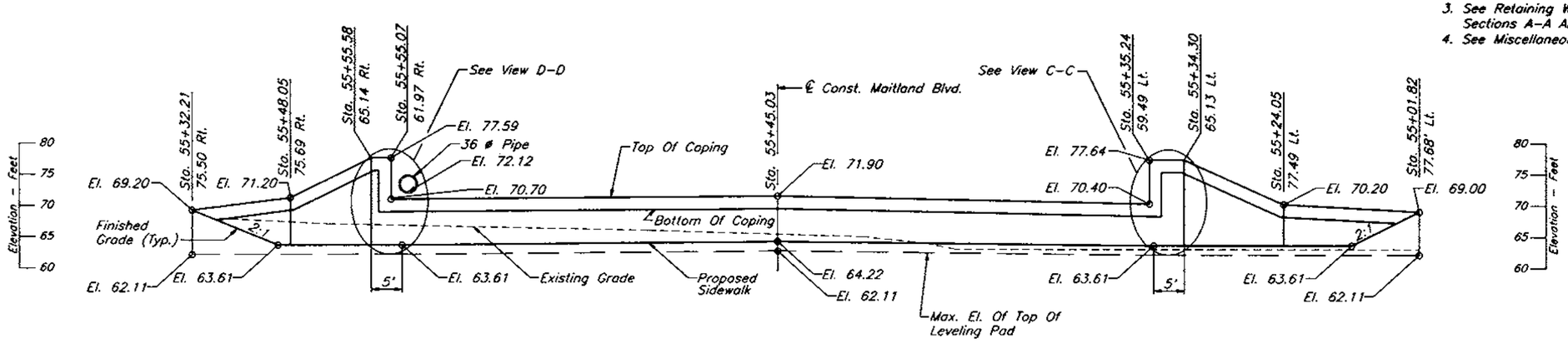

DEVELOPED ELEVATION
WALL NO. 3

REVISIONS					
Date	By	Description	Date	By	Description

	Names	Dates
Drawn by	JLA/JJS	3/96
Checked by	MKA	3/96
Designed by	MKA	3/96
Checked by	PM	3/96
Approved by	Peeter Mannik, P.E.	

ENGINEER OF RECORD:
DYER, RIDDLE, MILLS AND PRECOURT, INC.
1906 EAST COLONIAL DRIVE
ORLANDO, FLORIDA 32803

LOGO: DRMP — DYER, RIDDLE, MILLS & PRECOURT, INC. ENGINEERS · SURVEYORS

SEAL: Peeter Mannik 3/4/96

FLORIDA DEPARTMENT OF TRANSPORTATION
STRUCTURES DESIGN OFFICE

ROAD NO.	COUNTY	PROJECT NO.
SR414	SEMINOLE	77002-3503

SHEET TITLE: **RETAINING WALL NO.3 ALIGNMENT**

PROJECT NAME: **MAITLAND BOULEVARD**

Drawing No.

Index No.

JA/JS02/08/97 3:05PM M:\000DBR\RET\MAITRET3.DWG

FED. ROAD DIV. NO.	STATE	PROJECT NO.	FISCAL YEAR	SHEET NO.
3	FLA.		98	W-14

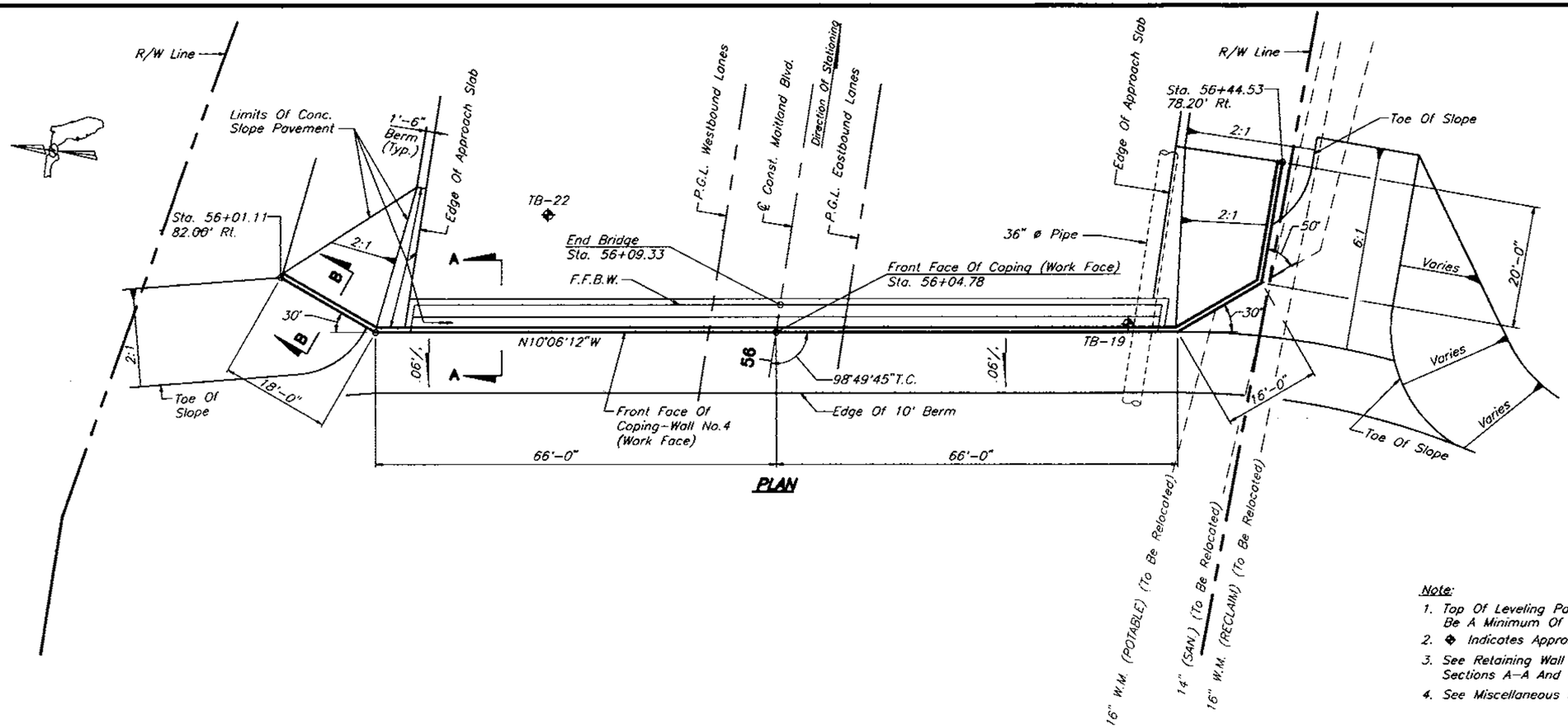

PLAN

Note:

1. Top Of Leveling Pad Embedment Depth Shall Be A Minimum Of 1'-6"
2. ◆ Indicates Approximate Location Of Spt Borings.
3. See Retaining Wall Details Wall No.3 & No.4 For Sections A-A And B-B.
4. See Miscellaneous Details For Rubble Rip-Rap Limits.

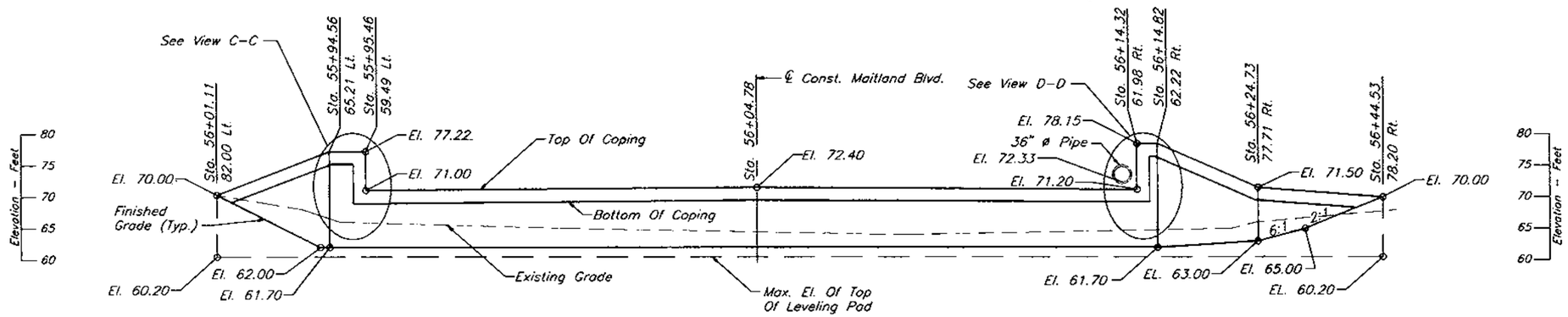

DEVELOPED ELEVATION
WALL NO. 4

REVISIONS					
Date	By	Description	Date	By	Description

	Names	Dates
Drawn by	JLA/JJS	3/96
Checked by	MKA	3/96
Designed by	MKA	3/96
Checked by	PM	3/96
Approved by	Peeter Mannik, P.E.	

ENGINEER OF RECORD:
DYER, RIDDLE, MILLS AND PRECOURT, INC.
1605 EAST COLONIAL DRIVE
ORLANDO, FLORIDA 32803

LOGO: DRMP DYER, RIDDLE, MILLS & PRECOURT, INC. ENGINEERS · SURVEYORS

SEAL: Peeter Mannik 3/4/98

FLORIDA DEPARTMENT OF TRANSPORTATION
STRUCTURES DESIGN OFFICE

ROAD NO.	COUNTY	PROJECT NO.
SR414	SEMINOLE	77002-3503

SHEET TITLE: **RETAINING WALL NO.4 ALIGNMENT**

PROJECT NAME: **MAITLAND BOULEVARD**

Drawing No.

Index No.

J:\JS02/08 '97 3:06PM M:\000BPR\RET\MAITRET4.DWG

FED. ROAD DIV. NO.	STATE	PROJECT NO.	FISCAL YEAR	SHEET NO.
3	FLA.		98	W-15

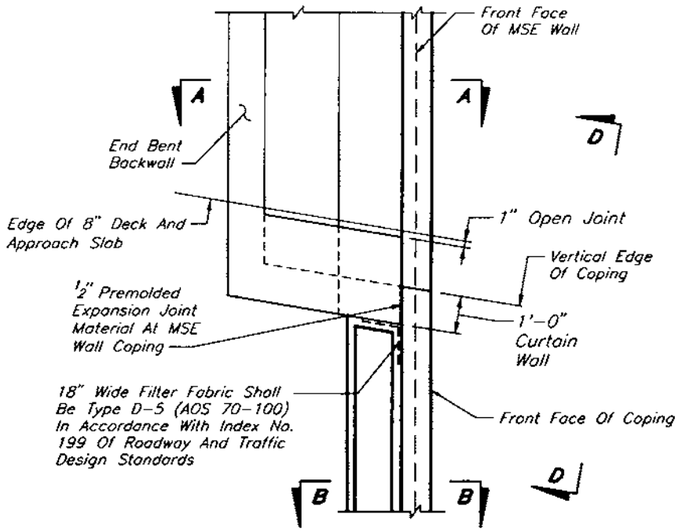

PLAN OF END BENT CORNER

Wall No.3 Shown, Wall No.4 Opposite Hand

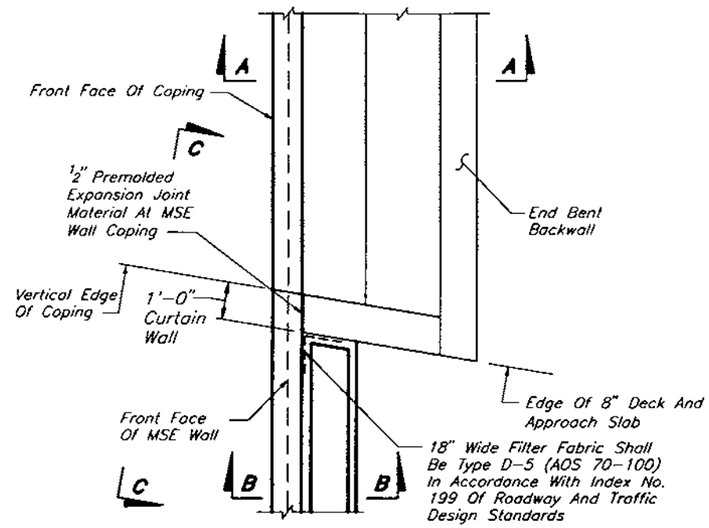

PLAN OF END BENT CORNER

Wall No.3 Shown, Wall No.4 Opposite

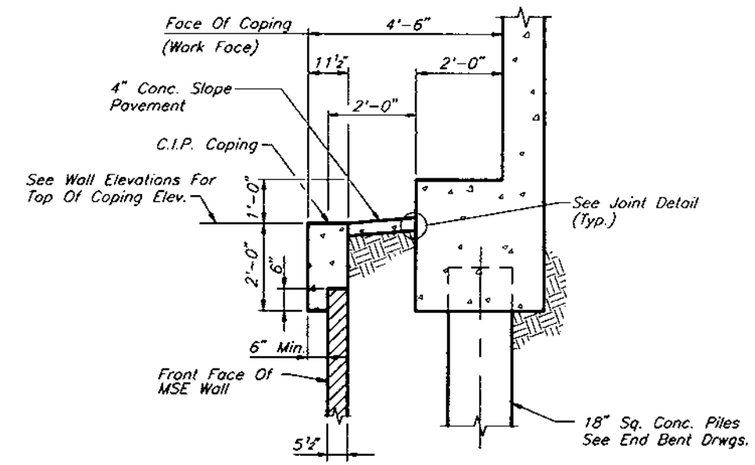

SECTION A-A

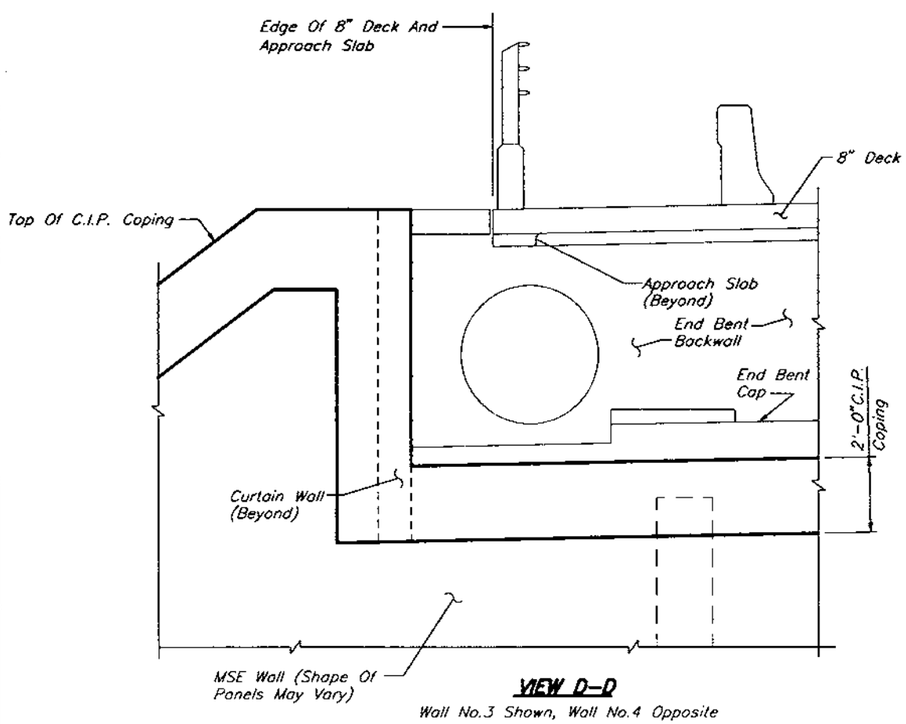

VIEW D-D

Wall No.3 Shown, Wall No.4 Opposite

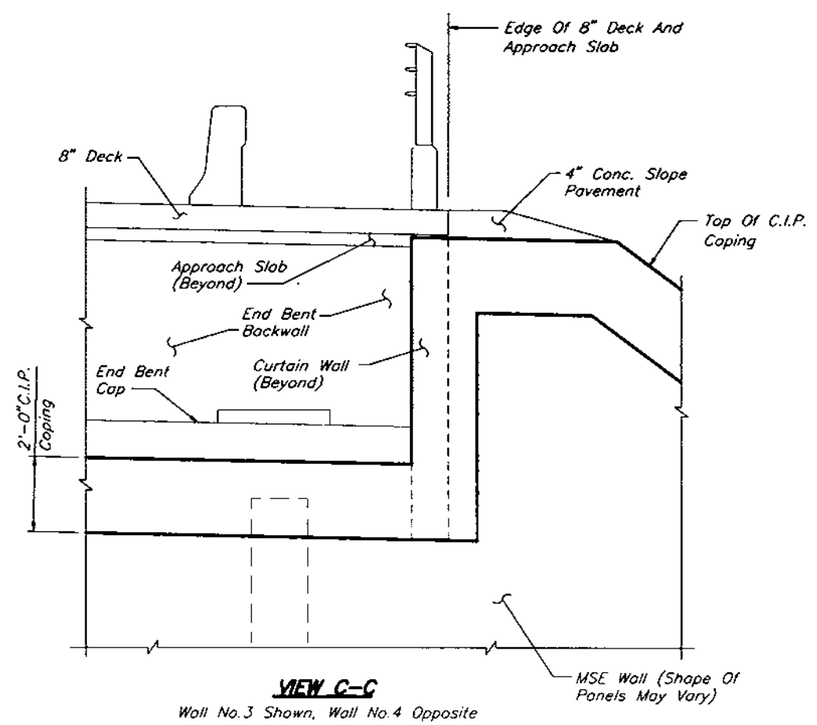

VIEW C-C

Wall No.3 Shown, Wall No.4 Opposite

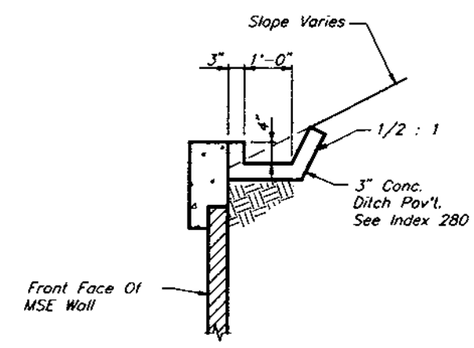

SECTION B-B

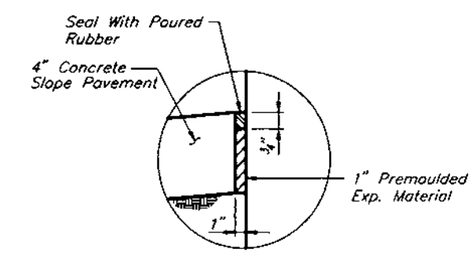

NOTE:
Applies To All Contacting Surfaces Of Slope Pavement At End Bents, Retaining Or End Walls, Toe Walls And Both Edges Of Berm.

JOINT DETAIL

REVISIONS					
Date	By	Description	Date	By	Description

	Names	Dates
Drawn by	JLA/LJS	3/96
Checked by	MKA	3/96
Designed by	MKA	3/96
Checked by	PM	3/96
Approved by	Peeter Mannik, P.E.	

ENGINEER OF RECORD:
DYER, RIDDLE, MILLS AND PRECOURT, INC.
1506 EAST COLONIAL DRIVE
ORLANDO, FLORIDA 32803

LOGO: DRMP

SEAL: 3/4/98

FLORIDA DEPARTMENT OF TRANSPORTATION
STRUCTURES DESIGN OFFICE

ROAD NO.	COUNTY	PROJECT NO.
SR414	SEMINOLE	77002-3503

SHEET TITLE: **RETAINING WALL WALL NO.3 AND NO.4 DETAILS**

Drawing No.

PROJECT NAME: **MAITLAND BOULEVARD**

Index No.

JA/JS02/18/97 3:08PM M:\000BPK\RET\MAITR034.DWG

FED. ROAD DIV. NO.	STATE	PROJECT NO.	FISCAL YEAR	SHEET NO.
3	FLA.		98	W-16

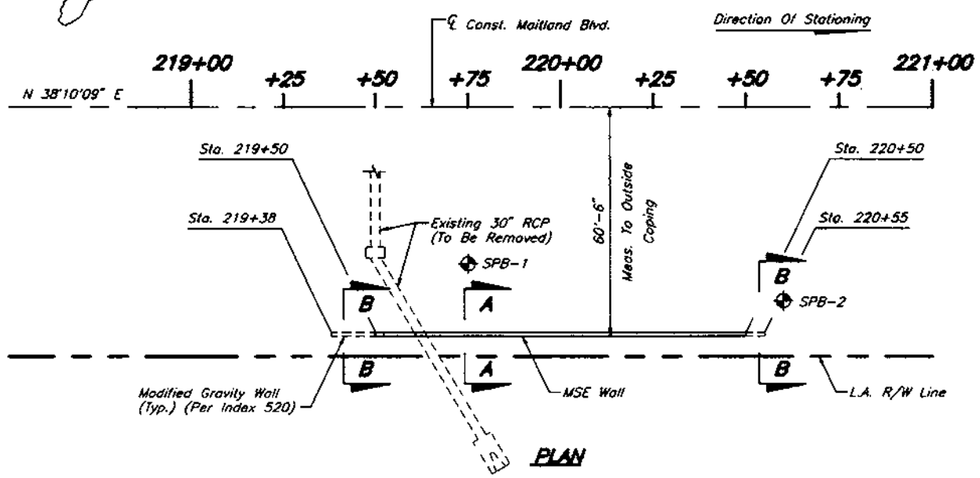

PLAN

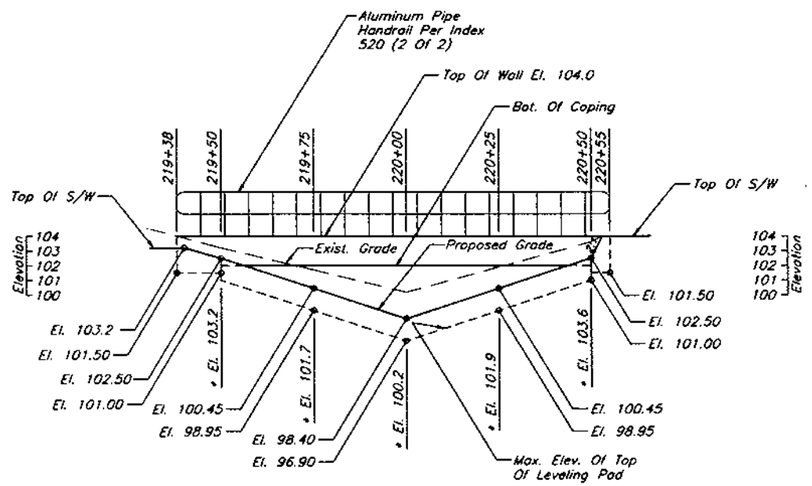

ELEVATION

* Indicates Elevation @ Existing Grade

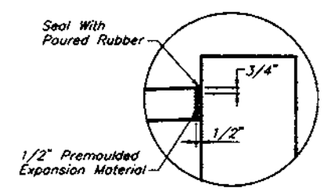

DETAIL AT JOINT

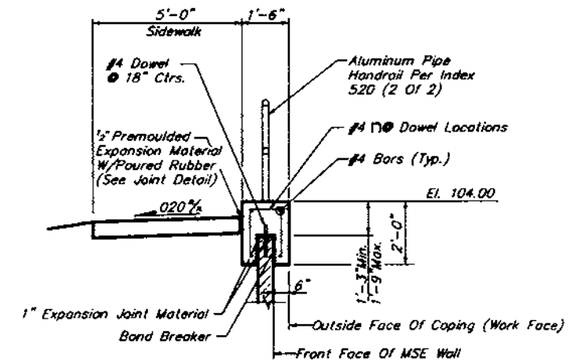

SECTION A-A

MSE WALL

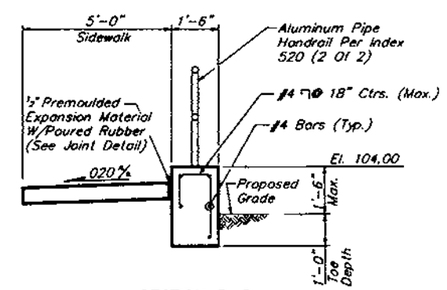

SECTION B-B

MODIFIED GRAVITY WALL

REVISIONS					
Date	By	Description	Date	By	Description

	Names	Dates
Drawn by	JLA/JJS	3/96
Checked by	MKA	3/96
Designed by	MKA	3/96
Checked by	PM	3/96
Approved by	Peeter Mannik, P.E.	

ENGINEER OF RECORD:
DYER, RIDDLE, MILLS AND PRECOURT, INC.
1605 EAST COLONIAL DRIVE
ORLANDO, FLORIDA 32803

LOGO: DRMP

SEAL: 3/4/98

FLORIDA DEPARTMENT OF TRANSPORTATION
STRUCTURES DESIGN OFFICE

ROAD NO.	COUNTY	PROJECT NO.
SR414	ORANGE	75011-3508

SHEET TITLE: **RETAINING WALL NO.5 ALIGNMENT AND DETAILS**

PROJECT NAME: **MAITLAND BOULEVARD**

Drawing No.

Index No.

JA/JS04/11/97 07:54AM M:\000BP\RET\MAITRET5.DWG

FED. ROAD DIV. NO.	STATE	PROJECT NO.	FISCAL YEAR	SHEET NO.
3	FLA.		98	W-17

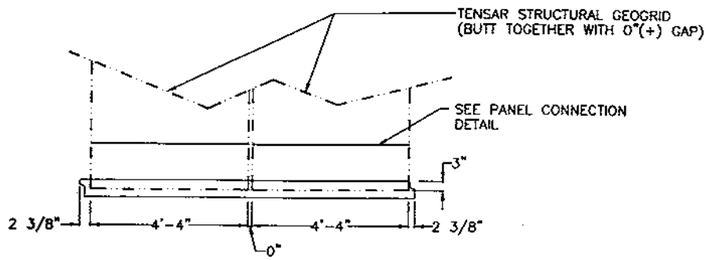

SECTION B-B

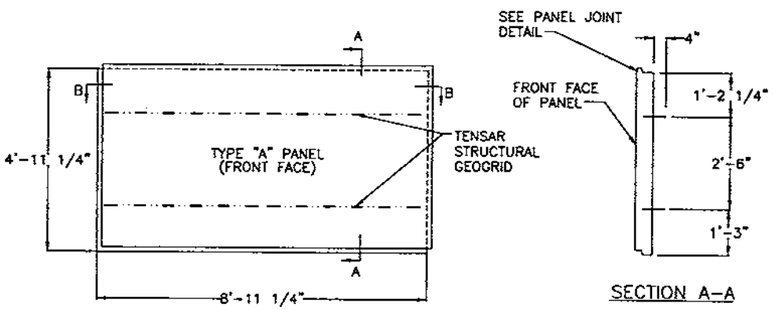

SECTION A-A

STANDARD PANEL DETAIL
N.T.S.

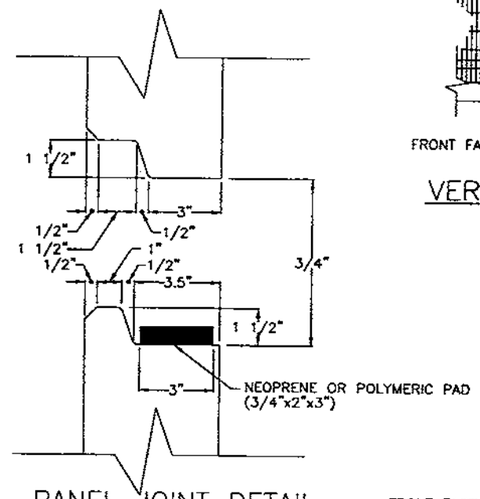

PANEL JOINT DETAIL
N.T.S.

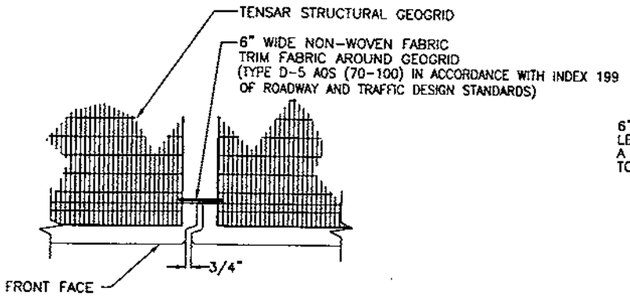

VERTICAL JOINT DETAIL
N.T.S.

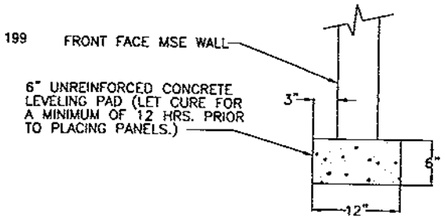

LEVELING PAD DETAIL
N.T.S.

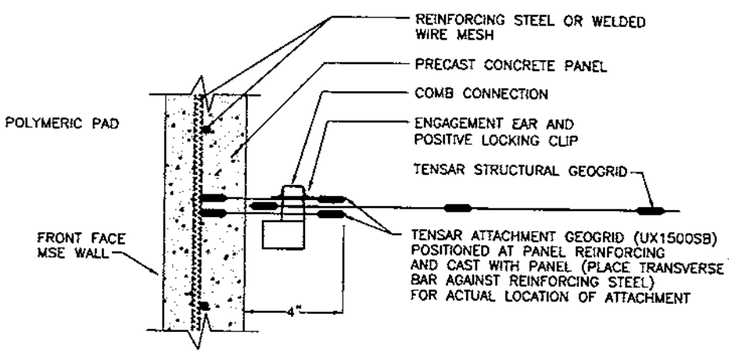

DETAIL A
N.T.S.

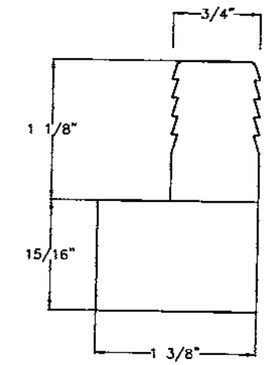

COMB
N.T.S.

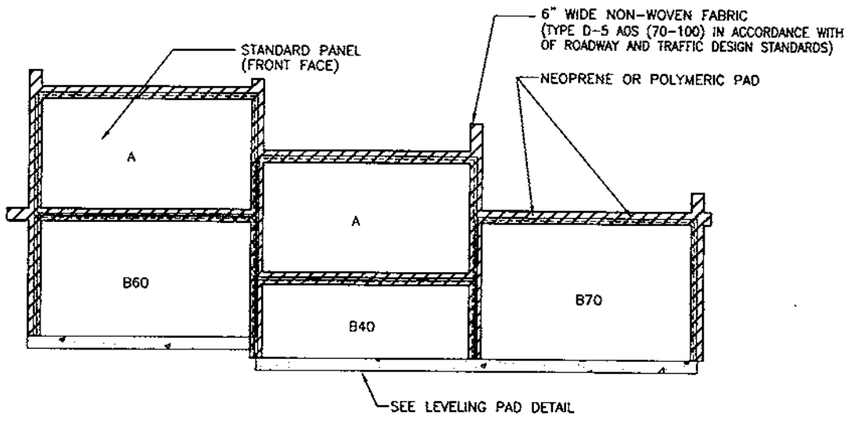

TYPICAL LEVELING PAD STEP AND FABRIC COVERAGE DETAIL
N.T.S.

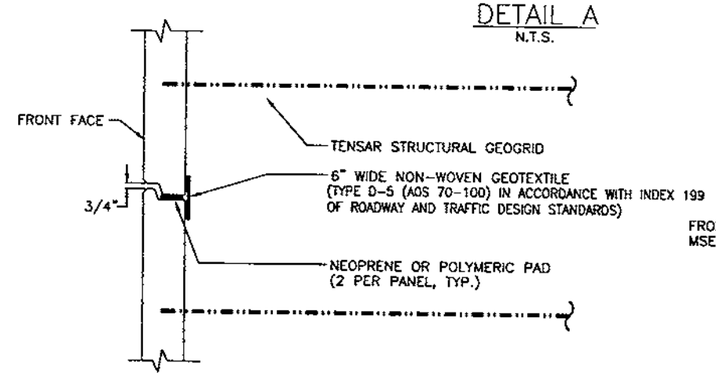

HORIZONTAL JOINT DETAIL
N.T.S.

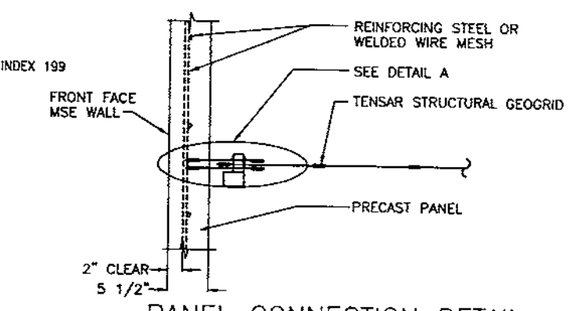

PANEL CONNECTION DETAIL
N.T.S.

THIS DESIGN IS BASED UPON SPECIFIC PROPERTIES OF TENSAR PRODUCTS (GEOGRIDS, DRAINAGE COMPOSITES AND EROSION MEDIA), WHICH ARE PROPRIETARY TO THE TENSAR CORPORATION 1210 CITIZENS PARKWAY, MORROW GA. 30260. ANY SUBSTITUTION OF THE SPECIFIED PRODUCTS WILL INVALIDATE THIS DESIGN. THIS DRAWING IS BEING FURNISHED FOR USE ON THIS SPECIFIC PROJECT ONLY. ANY PARTY ACCEPTING THIS DOCUMENT DOES SO IN CONFIDENCE AND AGREES SHALL NOT BE DUPLICATED WHOLE OR IN PART, NOR DISCLOSED TO OTHERS, WITHOUT CONSENT OF TENSAR EARTH TECHNOLOGIES, INC.

©1994, TENSAR EARTH TECHNOLOGIES, INC. A95209D1.DWG

REVISIONS

Date	By	Description	Date	By	Description

	Names	Dates
Drawn by	BBC	3/96
Checked by	RLC	3/96
Designed by	SAS	7/95
Checked by	RLC	7/95
Approved by	JAMES E. B. DAVIS	

ENGINEER OF RECORD:

TENSAR
EARTH TECHNOLOGIES, INC.
5775-B Glenridge Drive
Lakeside Center Suite 450
Atlanta, Georgia 30328
(404) 250-1290

SEAL: 3/4/98

FLORIDA DEPARTMENT OF TRANSPORTATION
STRUCTURES DESIGN OFFICE

ROAD NO.	COUNTY	PROJECT NO.
	SEMINOLE	77002-3503

SHEET TITLE: STANDARD DETAILS

Drawing No.

PROJECT NAME: TENSAR RETAINING WALL SYSTEM

Index No.

FED. ROAD DIV. NO.	STATE	PROJECT NO.	FISCAL YEAR	SHEET NO.
3	FLA.		98	W-18

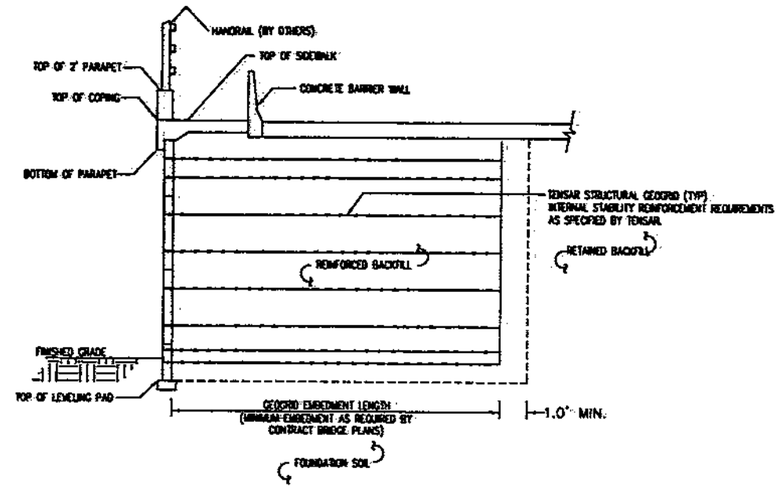

TYPICAL CROSS-SECTION:
N.T.S.

NOTE:
PROVIDE SAME PROPORTION OF STEEL FOR ALL PANEL SIZES.
#4 BARS AT 10" O.C. MAX.

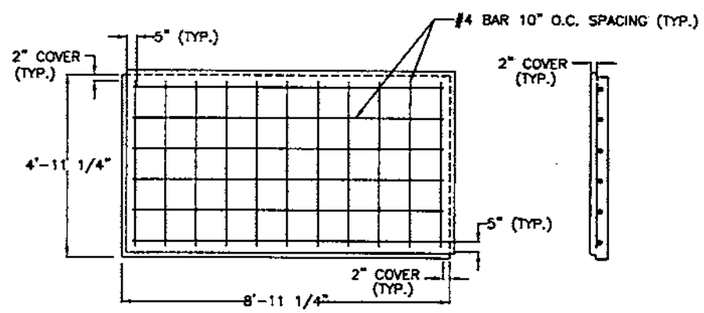

STEEL LAYOUT FOR STANDARD A PANEL
N.T.S.

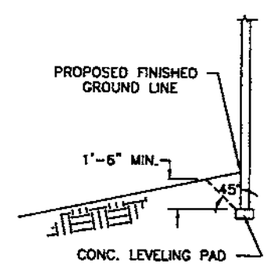

EMBEDMENT DETAIL AT GROUND LINE
N.T.S.

THIS DESIGN IS BASED UPON SPECIFIC PROPERTIES OF TENSAR PRODUCTS (GEOGRIDS, DRAINAGE COMPOSITES AND EROSION MEDIA), WHICH ARE PROPRIETARY TO THE TENSAR CORPORATION 1210 CITIZENS PARKWAY, MORROW GA. 30260. ANY SUBSTITUTION OF THE SPECIFIED PRODUCTS WILL INVALIDATE THIS DESIGN. THIS DRAWING IS BEING FURNISHED FOR USE ON THIS SPECIFIC PROJECT ONLY. ANY PARTY ACCEPTING THIS DOCUMENT DOES SO IN CONFIDENCE AND AGREES THAT IT SHALL NOT BE DUPLICATED WHOLE OR IN PART, NOR DISCLOSED TO OTHERS, WITHOUT THE CONSENT OF TENSAR EARTH TECHNOLOGIES, INC.

©1994, TENSAR EARTH TECHNOLOGIES, INC. A9520902.DWG

REVISIONS

Date	By	Description	Date	By	Description

	Names	Dates
Drawn by	BBC	3/96
Checked by	RLC	3/96
Designed by	SAS	7/95
Checked by	RLC	7/95
Approved by	JAMES E. B. DAVIS	

ENGINEER OF RECORD:

TENSAR
EARTH TECHNOLOGIES, INC.
5775-B Glenridge Drive
Lakeside Center Suite 450
Atlanta, Georgia 30328
(404) 250-1290

SEAL:
3/6/98

FLORIDA DEPARTMENT OF TRANSPORTATION
STRUCTURES DESIGN OFFICE

ROAD NO.	COUNTY	PROJECT NO.
	SEMINOLE	77002-3503

SHEET TITLE: STANDARD DETAILS

PROJECT NAME: TENSAR RETAINING WALL SYSTEM

Drawing No.

Index No.

FED. ROAD DIV. NO.	STATE	PROJECT NO.	FISCAL YEAR	SHEET NO.
3	FLA.		98	W-19

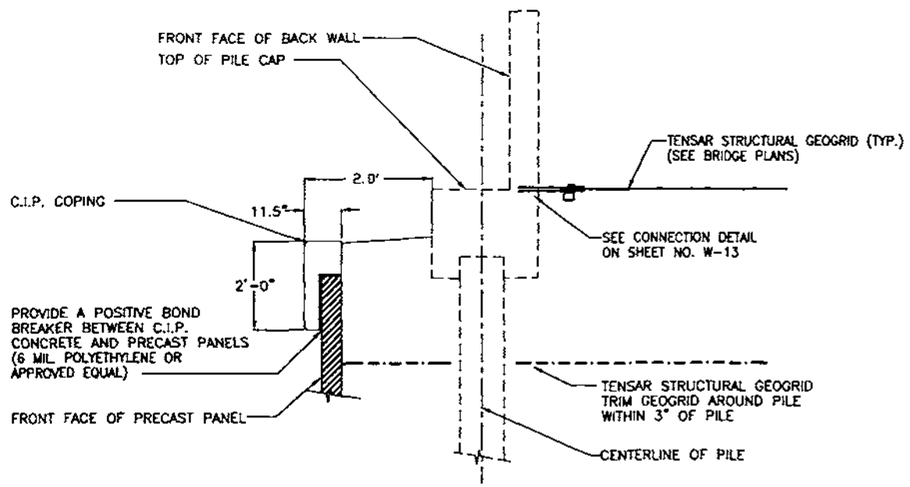

SECTION THRU ABUTMENT

SCALE: 1" : 20"

NOTE:
EXPANSION JOINTS IN C.I.P. COPING SHALL BE AT 2 PANEL INTERVALS. COPING JOINTS MUST COINCIDE WITH PANEL JOINTS ON FRONT FACE AND SHALL BE PERPENDICULAR TO SLOPE LINE. REINFORCING STEEL SHALL BE STOPPED 2" SHORT OF EITHER SIDE OF THE EXPANSION JOINT. CONTRACTION JOINTS SHALL BE PLACED IN MIDDLE PORTION ON 2 PANEL UNIT TO COINCIDE WITH PANEL JOINTS.

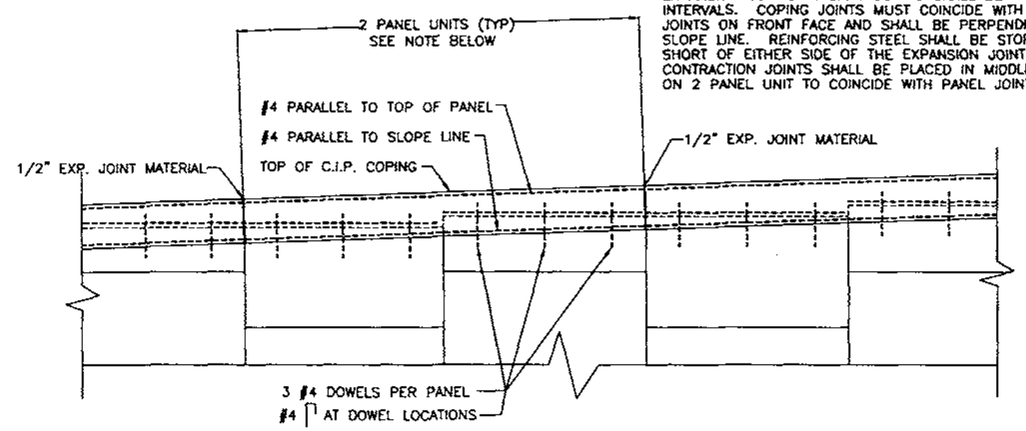

C.I.P. COPING PARTIAL ELEVATION VIEW

SCALE: 1" : 40"

THIS DESIGN IS BASED UPON SPECIFIC PROPERTIES OF TENSAR PRODUCTS (GEOGRIDS, DRAINAGE COMPOSITES AND EROSION MEDIA), WHICH ARE PROPRIETARY TO THE TENSAR CORPORATION 1210 CITIZENS PARKWAY, MORROW GA. 30260. ANY SUBSTITUTION OF THE SPECIFIED PRODUCTS WILL INVALIDATE THIS DESIGN. THIS DRAWING IS BEING FURNISHED FOR USE ON THIS SPECIFIC PROJECT ONLY. ANY PARTY ACCEPTING THIS DOCUMENT DOES SO IN CONFIDENCE AND AGREES THAT IT SHALL NOT BE DUPLICATED WHOLE OR IN PART, NOR DISCLOSED TO OTHERS, WITHOUT THE WRITTEN CONSENT OF TENSAR EARTH TECHNOLOGIES, INC.

© 1994, TENSAR EARTH TECHNOLOGIES, INC. A95209D5.DWG

REVISIONS

Date	By	Description	Date	By	Description

	Name	Date
Drawn by	BBC	3/96
Checked by	RLC	3/96
Designed by	SAS	7/95
Checked by	RLC	7/95
Approved by	JAMES E. B. DAVIS	

ENGINEER OF RECORD:

TENSAR
EARTH TECHNOLOGIES, INC.
5775-B Glenridge Drive
Lakeside Center Suite 450
Atlanta, Georgia 30328
(404) 250-1290

SEAL:
3/6/98

FLORIDA DEPARTMENT OF TRANSPORTATION
STRUCTURES DESIGN OFFICE

ROAD NO.	COUNTY	PROJECT NO.
	SEMINOLE	77002-3503

SHEET TITLE: STANDARD DETAILS

PROJECT NAME: TENSAR RETAINING WALL SYSTEM

Drawing No.

Index No.

FED. ROAD DIST. NO.	STATE	PROJECT NO.	FISCAL YEAR	SHEET NO.
3	FLA.		98	W-20

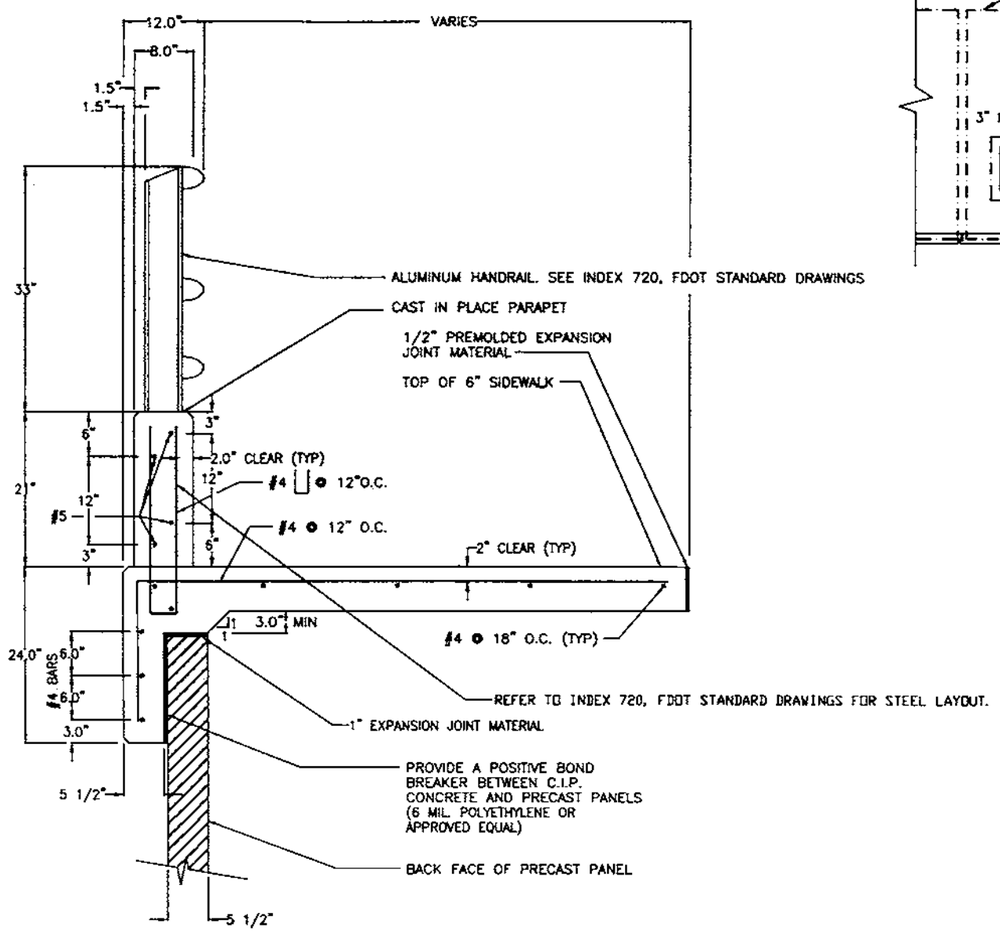

C.I.P. PARAPET DETAIL

SCALE: 1":20"

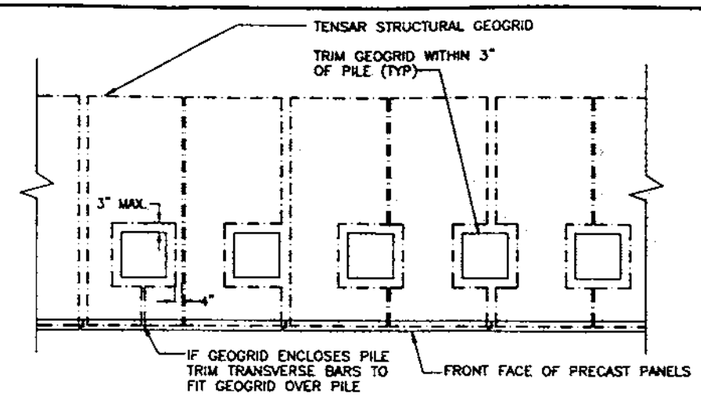

AVOID OBSTACLE DETAIL

N.T.S.

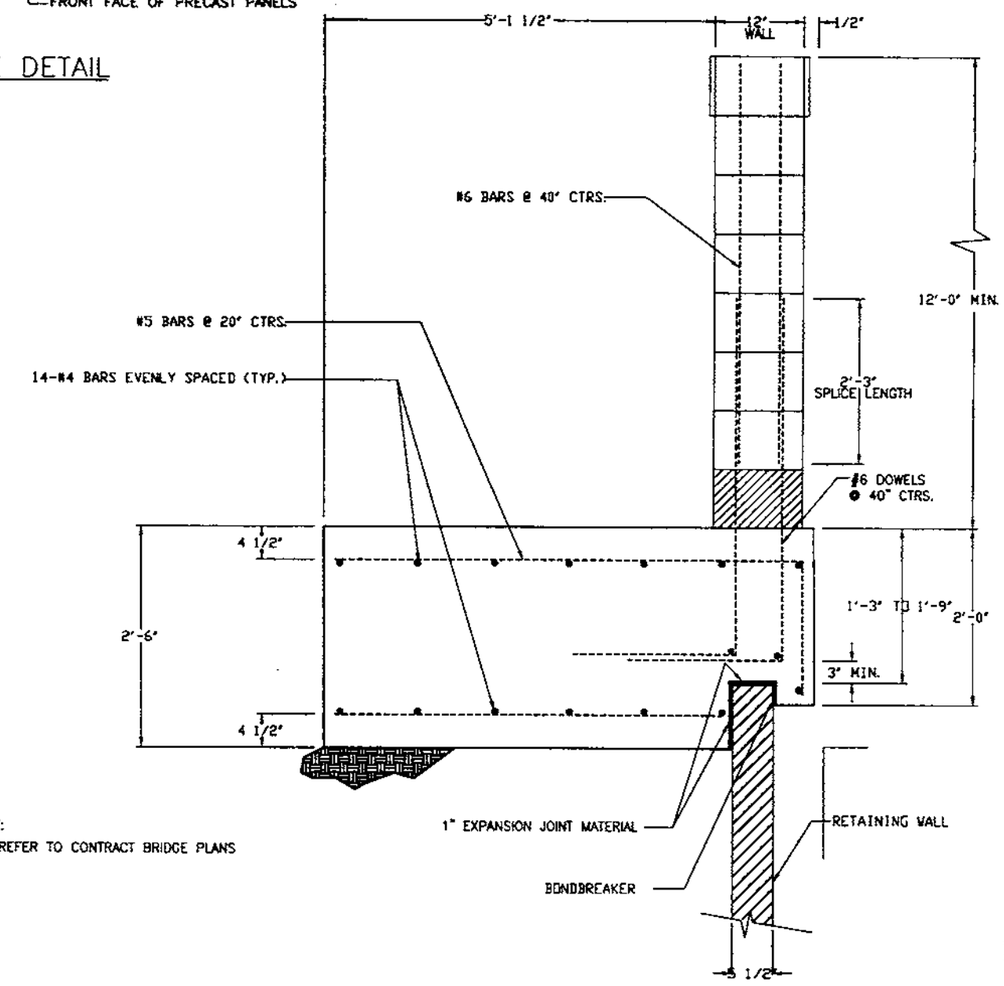

NOTE:

REFER TO CONTRACT BRIDGE PLANS

SOUND WALL SECTION AT RETAINING WALLS

SCALE: N.T.S.

THIS DESIGN IS BASED UPON SPECIFIC PROPERTIES OF TENSAR PRODUCTS (GEOGRIDS, DRAINAGE COMPOSITES AND EROSION MEDIA), WHICH ARE PROPRIETARY TO THE TENSAR CORPORATION 1210 CITIZENS PARKWAY, MORROW GA. 30260. ANY SUBSTITUTION OF THE SPECIFIED PRODUCTS WILL INVALIDATE THIS DESIGN. THIS DRAWING IS BEING FURNISHED FOR USE ON THIS SPECIFIC PROJECT ONLY. ANY PARTY ACCEPTING THIS DOCUMENT DOES SO IN CONFIDENCE AND AGREES THAT IT SHALL NOT BE DUPLICATED WHOLE OR IN PART, NOR DISCLOSED TO OTHERS, WITHOUT THE CONSENT OF TENSAR EARTH TECHNOLOGIES, INC.

©1994, TENSAR EARTH TECHNOLOGIES, INC.

A95209D6.DWG

REVISIONS

Date	By	Description	Date	By	Description

	Names	Dates
Drawn by	BBC	3/96
Checked by	RLC	3/96
Designed by	SAS	7/95
Checked by	RLC	7/95
Approved by	JAMES E. B. DAVIS	

ENGINEER OF RECORD:

TENSAR EARTH TECHNOLOGIES, INC.
5775-B Glenridge Drive
Lakeside Center Suite 450
Atlanta, Georgia 30328
(404) 250-1290

SEAL:

3/6/98

FLORIDA DEPARTMENT OF TRANSPORTATION
STRUCTURES DESIGN OFFICE

ROAD NO.	COUNTY	PROJECT NO.
	SEMINOLE	77002-3503

SHEET TITLE: STANDARD DETAILS

Drawing No.

PROJECT NAME: TENSAR RETAINING WALL SYSTEM

Index No.

FED. ROAD DIST. NO.	STATE	PROJECT NO.	FISCAL YEAR	SHEET NO.
3	FLA.		98	W-21

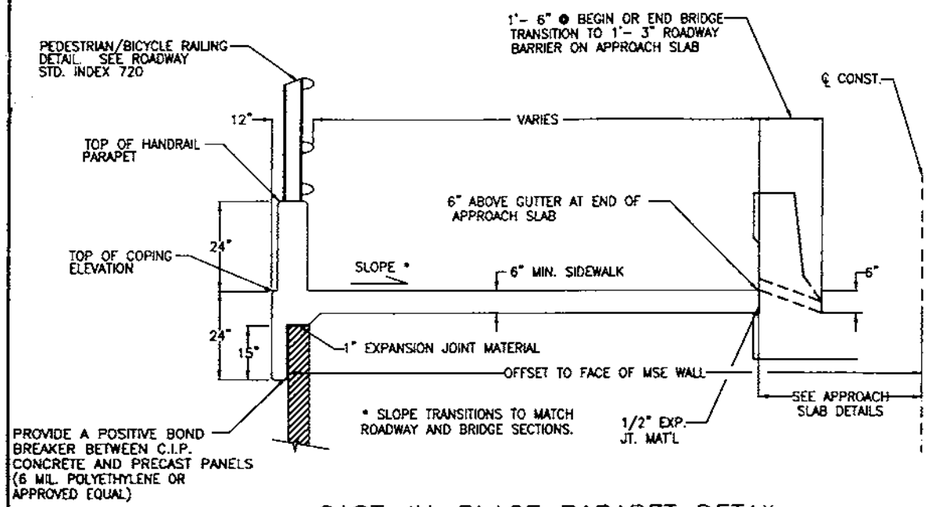

CAST-IN-PLACE PARAPET DETAIL

PARAPET/BICYCLE RAILING AT APPROACH SLAB

N.T.S.

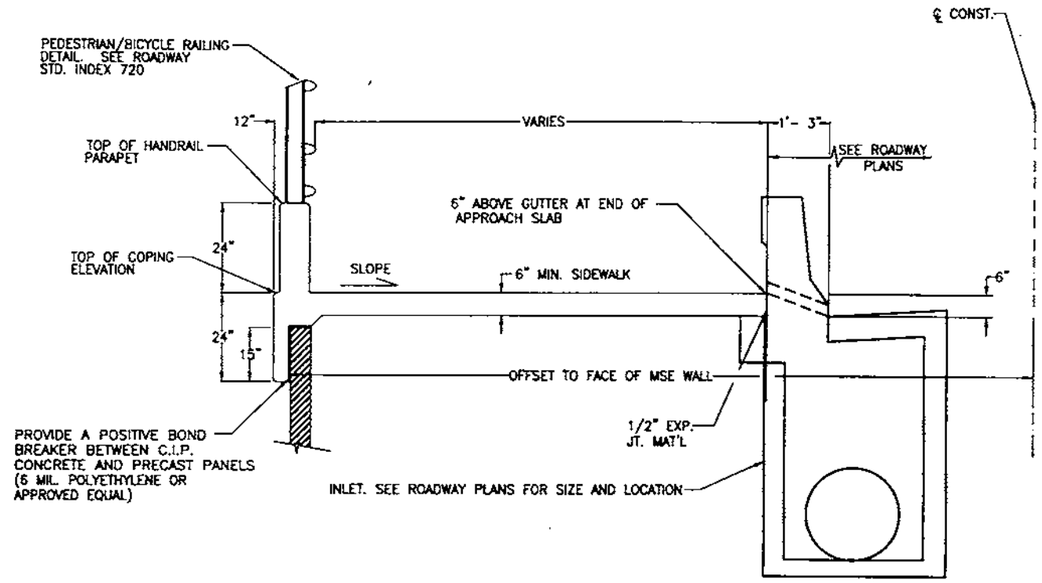

CAST-IN-PLACE PARAPET DETAIL

PARAPET/BICYCLE RAILING AT ROADWAY

N.T.S.

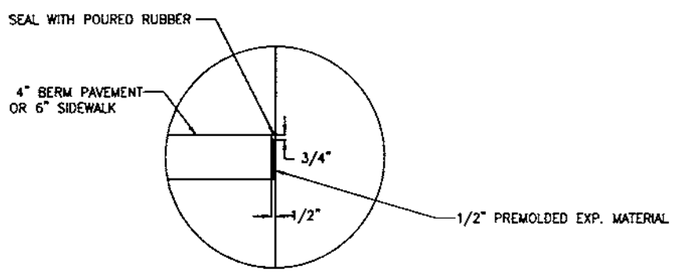

JOINT DETAIL

N.T.S.

NOTE: FOR REINFORCEMENT IN BARRIERS, SIDEWALKS, PARAPET – SEE CORRESPONDING INEX 700, 710 OR 720. FDOT STANDARD DRAWINGS.

THIS DESIGN IS BASED UPON SPECIFIC PROPERTIES OF TENSAR PRODUCTS (GEOGRIDS, DRAINAGE COMPOSITES AND EROSION MEDIA), WHICH ARE PROPRIETARY TO THE TENSAR CORPORATION 1210 CITIZENS PARKWAY, MORROW GA. 30260. ANY SUBSTITUTION OF THE SPECIFIED PRODUCTS WILL INVALIDATE THIS DESIGN. THIS DRAWING IS BEING FURNISHED FOR USE ON THIS SPECIFIC PROJECT ONLY. ANY PARTY ACCEPTING THIS DOCUMENT DOES SO IN CONFIDENCE AND AGREES THAT IT SHALL NOT BE DUPLICATED WHOLE OR IN PART, NOR DISCLOSED TO OTHERS, WITHOUT THE WRITTEN CONSENT OF TENSAR EARTH TECHNOLOGIES, INC.

©1994, TENSAR EARTH TECHNOLOGIES, INC. A9209D10.DWG

REVISIONS

Date	By	Description	Date	By	Description

	Names	Dates
Drawn by	BBC	3/96
Checked by	RLC	3/96
Designed by	SAS	7/95
Checked by	RLC	7/95
Approved by	JAMES E. B. DAVIS	

ENGINEER OF RECORD:

TENSAR
EARTH TECHNOLOGIES, INC.
5775-B Glenridge Drive
Lakeside Center Suite 450
Atlanta, Georgia 30328
(404) 250-1290

SEAL:

FLORIDA DEPARTMENT OF TRANSPORTATION
STRUCTURES DESIGN OFFICE

ROAD NO.	COUNTY	PROJECT NO.
	SEMINOLE	77002-3503

SHEET TITLE: STANDARD DETAILS

PROJECT NAME: TENSAR RETAINING WALL SYSTEM

Drawing No.

Index No.

W.P.I. NO. 5117764

FISCAL YEAR	SHEET NO.
98	1

THIS CONTRACT PLAN SET INCLUDES

ROADWAY PLANS
SIGNING AND PAVEMENT MARKING PLANS
SIGNALIZATION PLANS
ROADWAY LIGHTING PLANS
STRUCTURE PLANS

STATE OF FLORIDA
DEPARTMENT OF TRANSPORTATION
PLANS OF PROPOSED
STATE HIGHWAY

FINANCIAL PROJECT NO. 240266-1-52-01
STATE PROJECT NO. 77002-3505
(FEDERAL FUNDS)
SEMINOLE COUNTY
STATE ROAD NO. 414

A DETAILED INDEX APPEARS ON THE KEY SHEET OF EACH COMPONENT SET OF PLANS

INDEX OF ROADWAY PLANS

SHEET NO.	SHEET DESCRIPTION
1	KEY SHEET
2-4	DRAINAGE MAP
5-11	TYPICAL SECTIONS
12-13	SUMMARY OF QUANTITIES
14-19	SUMMARY OF DRAINAGE STRUCTURES
20	OPTIONAL PIPE MATERIALS TABULATION
21-22	REFERENCE POINTS
23	GENERAL NOTES
24-41	ROADWAY PLAN SHEETS
42-56	ROADWAY PROFILE SHEETS
57-59	CURVE & COORDINATE DATA SHEETS
60	INTERCHANGE LAYOUT
61-63	RAMP TERMINAL DETAILS
64-110	DRAINAGE STRUCTURES
111-114	POND DETAIL SHEETS
115-119	ROADWAY SOIL SURVEY
120-218	ROADWAY CROSS SECTIONS
219-229	POND CROSS SECTIONS
230-307	TRAFFIC CONTROL SHEETS
308-320	UTILITY ADJUSTMENTS
321-324	LANDSCAPE PLANS
325	APPROACH SLABS
326-359	INTERIM STANDARDS

END CONSTRUCTION
℄ CONST SR 434 STA 739+75.34

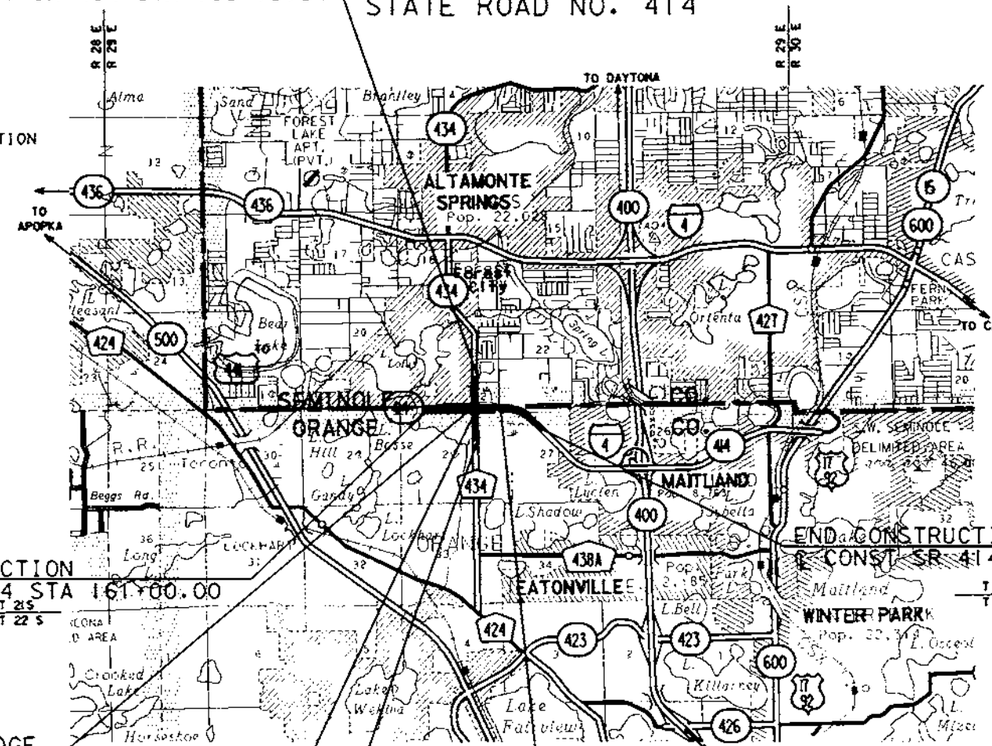

BEGIN PROJECT
BEGIN CONSTRUCTION
℄ CONST SR 414 STA 161+00.00
M.P. 37.934 T 21S / T 22S

END CONSTRUCTION
℄ CONST SR 414 STA 224+57.97
T 21S / T 22S

BEGIN BRIDGE
STA 184+64.70

END BRIDGE
STA 187+09.70

BEGIN CONSTRUCTION
℄ CONST SR 434 STA 700+25.00

END PROJECT
℄ CONST SR 414 STA 199+42.63
M.P. 38.644

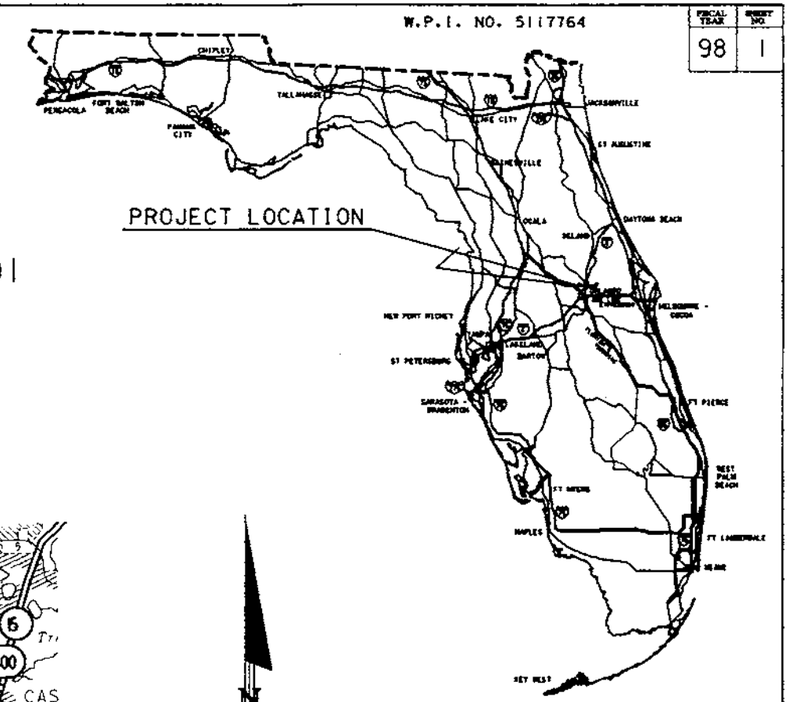

ROADWAY PLANS
ENGINEER OF RECORD
MICHAEL A JACOBS, P.E.
315 EAST ROBINSON STREET
SUITE 245
ORLANDO, FL. 32801
(407) 422-0353
VENDOR NUMBER 59-2087895

Michael A. Jacobs
4/23/98

PLANS PREPARED BY :
URS Greiner
315 EAST ROBINSON STREET
SUITE 245
ORLANDO, FL. 32801.
(407) 422-0353
VENDOR NUMBER 59-2087895

THESE PLANS HAVE BEEN PREPARED IN ACCORDANCE WITH AND ARE GOVERNED BY THE STATE OF FLORIDA, DEPARTMENT OF TRANSPORTATION, ROADWAY AND TRAFFIC DESIGN STANDARDS (BOOKLET DATED JANUARY, 1994).

REVISIONS

Roadway Sheet 1 (Revised 4-23-98)
Structure Sheets B-1 & W-1 (Revised 4-23-98)
Structure Sheets W-35 Thru W-43 (Added 4-23-98)

NOTE:
THIS PROJECT TO BE LET TO CONTRACT WITH STATE PROJECT NOS. 75011-3508, 77002-3500, 77002-3503, 77002-6502 & 77002-6504

ATTENTION IS DIRECTED TO THE FACT THAT THESE PLANS MAY HAVE BEEN REDUCED IN SIZE BY REPRODUCTION. THIS MUST BE CONSIDERED WHEN OBTAINING SCALED DATA.

GOVERNING SPECIFICATIONS: STATE OF FLORIDA, DEPARTMENT OF TRANSPORTATION, STANDARD SPECIFICATIONS, DATED 1991 AND SUPPLEMENTS THERETO IF NOTED IN THE SPECIAL PROVISIONS FOR THIS PROJECT.

LENGTH OF PROJECT

	LINEAR FT.	MILES
ROADWAY	3,597.63	0.682
BRIDGES	245.00	0.046
NET LENGTH OF PROJ.	3,842.63	0.728
EXCEPTIONS	0.00	0.00
GROSS LENGTH OF PROJ.	3,842.63	0.728

REVISIONS		
DATE	BY	DESCRIPTION
4-98	MAJ	Added Financial Project No.

ROADWAY PLANS APPROVED BY: MICHAEL A. JACOBS, P.E.
DATE:
P.E. NO.: 45254

FDOT PROJECT MANAGER : RICHARD W. BELL, P.E.

FS 77002-3

MANDIST: 05 COUNTY: 77 SECTION: 002 240178 1 52 02

SUMMARY OF BRIDGE PAY ITEMS

ALT	SPC	ITEM NUMBER			ITEM	UNIT	240178152 02 BR - 770074 FA PART	240178152 02 BR - 770075 FA PART	240178152 02 BR - 779999 FA PART	240266152 01 BR - 770083 FA NON PART	239263152 01 BR - 759998 FA PART
	4	103	1	A	TEMPORARY WORK STRUCTURE	LS	1.000	.000	.000	.000	.000
	1	110	3	A	STRUCTURE REMOVAL OF EXISTING	LS	.000	.000	.000	.000	.000
	1	400	2	4	CONC CLASS II (SUPERSTRUCTURE)	CY	2813.400	261.900	.000	842.800	.000
	1	400	2	5	CONC CLASS II (SUBSTRUCTURE)	CY	.000	.000	.000	201.400	.000
	1	400	4	5	CONC CLASS IV (SUBSTRUCTURE)	CY	188.800	133.400	.000	.000	.000
	2	400	4	25	CONC CLASS IV (MASS)(SUBSTRUCTURE)	CY	864.700	.000	.000	.000	.000
	1	400	5	3	HANDRAIL CONC (PARAPET TYPE) (ALUM)	LF	1963.000	138.000	.000	.000	.000
	1	400	7		BRIDGE FLOOR GROOVING	SY	7156.000	666.000	.000	3010.000	.000
	2	400	95	3	COFFERDAM (SPECIAL)	EA	1.000	.000	.000	.000	.000
	2	400	147		COMPOSITE NEOPRENE PADS *	CF	55.900	3.700	.000	22.200	.000
	2	400	148	1	TRAFFIC RAILING (F81)(BARRIER)	LF	1400.000	138.000	.000	490.000	.000
	2	400	153		NON SHRINK GROUT (F81)(MISCELLANEOUS)	CF	10.800	.000	.000	.000	.000
	3	415	1	4	REINF STEEL (SUPERSTRUCTURE)	LB	786857.000	70498.000	.000	212001.000	.000
	3	415	1	5	REINF STEEL (SUBSTRUCTURE)	LB	98313.000	16543.000	.000	47162.000	.000
	2	430	171	33	PIPE STORM SEWER CULV (OPTIONAL MATERIAL)(30")	LF	784.000	.000	.000	.000	.000
	2	430	171	38	PIPE STORM SEWER CULV (OPTIONAL MATERIAL)(36")	LF	.000	148.000	.000	.000	.000
	3	450	1	3	PREST BEAMS (TYPE IV) *	LF	.000	750.000	.000	.000	.000
	3	450	1	72	PREST BEAMS (FLA BULB T) (72"*	LF	5351.000	.000	.000	.000	.000
	3	455	3	2	PILING FURNISHED (PREST CONC) (18" SQ*	LF	.000	1100.000	.000	.000	.000
	3	455	3	4	PILING FURNISHED (PREST CONC) (24" SQ*	LF	.000	.000	.000	2776.000	.000
	1	455	4	2	PILING DRIVEN (PREST CONC) (18" SQ)	LF	.000	1100.000	.000	.000	.000
	1	455	4	4	PILING DRIVEN (PREST CONC) (24" SQ)	LF	.000	.000	.000	2776.000	.000
	3	455	7	34	PILING FURNISHED (STEEL) (20" DIA PIPE) *	LF	24397.000	.000	.000	.000	.000
	3	455	8	34	PILING DRIVEN (STEEL) (20" DIA PIPE)	LF	24397.000	.000	.000	.000	.000
	1	455	15		PILE HOLES PREFORMED	EA	118.000	22.000	.000	26.000	.000
	1	455	17	2	PILE SPLICES (18") *	EA	.000	3.000	.000	.000	.000
	1	455	17	4	PILE SPLICES (24") *	EA	.000	.000	.000	3.000	.000
	3	455	17	34	PILE SPLICES (STEEL) (20" DIA PIPE)	EA	408.000	.000	.000	.000	.000
	2	455	18	A	PROTECTION OF EXISTING STRUCTURES	LS	.000	.000	.000	.000	.000
	2	455	18	B	PROTECTION OF EXISTING STRUCTURES	LS	.000	.000	.000	.000	.000
	2	455	88	2	DRILLED SHAFT (30" DIA)	LF	.000	.000	5749.000	.000	746.000
	2	455	122	2	EXCAVATION UNCLASSIFIED SHAFT (30" DIA)	LF	.000	.000	6631.000	.000	855.000
	2	455	124		DRILLED SHAFT SIDEWALL OVERREAMING	LF	.000	.000	330.000	.000	43.000
	2	455	125	2	EXCAVATION UNCLASSIFIED EXTRA DEPTH (30" DIA)	LF	.000	.000	330.000	.000	43.000
	2	455	137		TEST LOAD(DYNAMIC)	EA	21.000	4.000	.000	4.000	.000
	2	455	140	12	TEST PILES FURNISHED (18" SQ*	LF	.000	140.000	.000	.000	.000
	2	455	140	14	TEST PILES FURNISHED (24" SQ*	LF	.000	.000	.000	260.000	.000
	2	455	140	25	TEST PILES FURNISHED (20" DIA*	LF	1310.000	.000	.000	.000	.000
	2	455	141	12	TEST PILES DRIVEN (18" SQ)	LF	.000	140.000	.000	.000	.000
	2	455	141	14	TEST PILES DRIVEN (24" SQ)	LF	.000	.000	.000	260.000	.000
	2	455	141	25	TEST PILES DRIVEN (20" DIA*	LF	1310.000	.000	.000	.000	.000
	2	459	70		BITUMEN COATING ON CONCRETE PILES	SY	.000	.000	.000	1080.000	.000
	2	459	71		POLYETHYLENE SHEETING ON CONCRETE PILES	SY	232.000	147.000	.000	.000	.000
	1	460	2	1B	STRUCT STEEL (CARBON)	LS	.000	.000	.000	.000	.000
	1	460	2	2B	STRUCT STEEL (LOW ALLOY)	LS	.000	.000	.000	.000	.000
	1	460	2	20A	STRUCT STEEL (WEATHERING)	LS	.000	.000	.000	.000	.000
	1	460	7	4	EXPANSION JOINT SEAL (STRIP ELAST) *	LF	533.000	.000	.000	228.000	.000
	1	514	71	3	PLASTIC FILTER FABRIC (RIPRAP)	SY	1283.000	1198.000	.000	.000	.000
	1	524	2	2	SLOPE PAVT CONC (4")	SY	22.000	236.000	.000	.000	.000
	2	530	3	3	RIPRAP (RUBBLE) (BANK AND SHORE)	TN	1870.800	1380.700	.000	.000	.000

NOTE: * IDENTIFIES ITEMS NORMALLY REQUIRING SHOP DRAWINGS CONTRACTOR SHALL DETERMINE OTHER ITEMS REQUIRING SHOP DRAWINGS.

1 4/23/98 CESPJ15 4
CES0154 PAGE 01 OF 02

CONTRACT JOBS CONTINUED MANDIST: 05 COUNTY: 77 SECTION: 002 240178 1 52 02

SUMMARY OF BRIDGE PAY ITEMS

ALT	SPC	ITEM NUMBER			ITEM	UNIT					QUANTITY TOTAL
	4	103	1	A	TEMPORARY WORK STRUCTURE	LS					1.000
	1	110	3	A	STRUCTURE REMOVAL OF EXISTING	LS					1.000
	1	400	2	4	CONC CLASS II (SUPERSTRUCTURE)	CY					3918.100
	1	400	2	5	CONC CLASS II (SUBSTRUCTURE)	CY					201.400
	1	400	4	5	CONC CLASS IV (SUBSTRUCTURE)	CY					322.200
	2	400	4	25	CONC CLASS IV (MASS)(SUBSTRUCTURE)	CY					864.700
	1	400	5	3	HANDRAIL CONC (PARAPET TYPE) (ALUM)	LF					2101.000
	1	400	7		BRIDGE FLOOR GROOVING	SY					10832.000
	2	400	95	3	COFFERDAM (SPECIAL)	EA					1.000
	2	400	147		COMPOSITE NEOPRENE PADS *	CF					81.800
	2	400	148	1	TRAFFIC RAILING (F81)(BARRIER)	LF					2028.000
	2	400	153		NON SHRINK GROUT (F81)(MISCELLANEOUS)	CF					10.800
	3	415	1	4	REINF STEEL (SUPERSTRUCTURE)	LB					1069356.000
	3	415	1	5	REINF STEEL (SUBSTRUCTURE)	LB					162018.000
	2	430	171	33	PIPE STORM SEWER CULV (OPTIONAL MATERIAL)(30")	LF					784.000
	2	430	171	38	PIPE STORM SEWER CULV (OPTIONAL MATERIAL)(36")	LF					148.000
	3	450	1	3	PREST BEAMS (TYPE IV) *	LF					750.000
	3	450	1	72	PREST BEAMS (FLA BULB T) (72"*	LF					5351.000
	3	455	3	2	PILING FURNISHED (PREST CONC) (18" SQ*	LF					1100.000
	3	455	3	4	PILING FURNISHED (PREST CONC) (24" SQ*	LF					2776.000
	1	455	4	2	PILING DRIVEN (PREST CONC) (18" SQ)	LF					1100.000
	1	455	4	4	PILING DRIVEN (PREST CONC) (24" SQ)	LF					2776.000
	3	455	7	34	PILING FURNISHED (STEEL) (20" DIA PIPE) *	LF					24397.000
	3	455	8	34	PILING DRIVEN (STEEL) (20" DIA PIPE)	LF					24397.000
	1	455	15		PILE HOLES PREFORMED	EA					166.000
	1	455	17	2	PILE SPLICES (18") *	EA					3.000
	1	455	17	4	PILE SPLICES (24") *	EA					3.000
	3	455	17	34	PILE SPLICES (STEEL) (20" DIA PIPE)	EA					408.000
	2	455	18	A	PROTECTION OF EXISTING STRUCTURES	LS					1.000
	2	455	18	B	PROTECTION OF EXISTING STRUCTURES	LS					1.000
	2	455	88	2	DRILLED SHAFT (30" DIA)	LF					6495.000
	2	455	122	2	EXCAVATION UNCLASSIFIED SHAFT (30" DIA)	LF					7492.000
	2	455	124		DRILLED SHAFT SIDEWALL OVERREAMING	LF					373.000
	2	455	125	2	EXCAVATION UNCLASSIFIED EXTRA DEPTH (30" DIA)	LF					373.000
	2	455	137		TEST LOAD(DYNAMIC)	EA					29.000
	2	455	140	12	TEST PILES FURNISHED (18" SQ*	LF					140.000
	2	455	140	14	TEST PILES FURNISHED (24" SQ*	LF					260.000
	2	455	140	25	TEST PILES FURNISHED (20" DIA*	LF					1310.000
	2	455	141	12	TEST PILES DRIVEN (18" SQ)	LF					140.000
	2	455	141	14	TEST PILES DRIVEN (24" SQ)	LF					260.000
	2	455	141	25	TEST PILES DRIVEN (20" DIA*	LF					1310.000
	2	459	70		BITUMEN COATING ON CONCRETE PILES	SY					1080.000
	2	459	71		POLYETHYLENE SHEETING ON CONCRETE PILES	SY					379.000
	1	460	2	1B	STRUCT STEEL (CARBON)	LS					1.000
	1	460	2	2B	STRUCT STEEL (LOW ALLOY)	LS					1.000
	1	460	2	20A	STRUCT STEEL (WEATHERING)	LS					1.000
	1	460	7	4	EXPANSION JOINT SEAL (STRIP ELAST) *	LF					761.000
	1	514	71	3	PLASTIC FILTER FABRIC (RIPRAP)	SY					2481.000
	1	524	2	2	SLOPE PAVT CONC (4")	SY					258.000
	2	530	3	3	RIPRAP (RUBBLE) (BANK AND SHORE)	TN					3251.500

NOTE: * IDENTIFIES ITEMS NORMALLY REQUIRING SHOP DRAWINGS CONTRACTOR SHALL DETERMINE OTHER ITEMS REQUIRING SHOP DRAWINGS.

REVISIONS		
DATE	BY	DESCRIPTION
4-23-98	MAJ	ADDED ITEM NO. 549-70-215 WITH QUANTITY OF 57492 S.F. FOR BR. 770083 (ALT. AC)

FOR S.P. No. 77002-3503

FOR S.P. No. 77002-3505

Michael P. Jacobs

4/23/98

FOR S.P. No. 75011-3508

FOR REVISION ONLY

CONTRACT ITEMS CONTINUED MANDIST: 05 COUNTY: 77 SECTION: 002 240178 : 52 02

SUMMARY OF BRIDGE PAY ITEMS

ALT	SP C	ITEM NUMBER	ITEM	UNIT	240178152 02 BR - 770074 FA PART	240178152 02 BR - 770075 FA PART	240178152 02 BR - 779999 FA PART	240266152 01 BR - 770083 FA NON PART	239263152 01 BR - 759998 FA PART
	2	534 72 2	BARRIER WALL NOISE (FBI)(PERMANENT INSTALLATION*	SF	.000	.000	71881.000	.000	8197.000
	5	549 70 206	RETAINING WALL (TENSAR) *	SF	13601.000	3319.000	.000	.000	355.000
	3	563 2	ANTI GRAFFITI COATING	SF	13601.000	3319.000	69260.000	57492.000	7980.000
	5	1622 11 33	BRIDGE HANGERS (FBI)(GALVANIZED STEEL) (30")	EA	71.000	.000	.000	.000	.000
	5	1622 11 38	BRIDGE HANGERS (FBI)(GALVANIZED STEEL) (36")	EA	.000	8.000	.000	.000	.000
AA	2	528 70	REINFORCED EARTH WALL *	SF	.000	.000	.000	57492.000	.000
AB	2	545 70	RETAINED EARTH WALL *	SF	.000	.000	.000	57492.000	.000
AC	5	549 70 215	RETAINING WALL(PERMANENT)(HILFIKER SQUARE PANEL)*	SF	.000	.000	.000	57492.000	.000

NOTE: * IDENTIFIES ITEMS NORMALLY REQUIRING SHOP DRAWINGS CONTRACTOR SHALL DETERMINE OTHER ITEMS REQUIRING SHOP DRAWINGS.

CONTRACT JOBS CONTINUED MANDIST: 05 COUNTY: 77 SECTION: 002 240178 : 52 02

SUMMARY OF BRIDGE PAY ITEMS

ALT	SP C	ITEM NUMBER	ITEM	UNIT	QUANTITY TOTAL
	2	534 72 2	BARRIER WALL NOISE (FBI)(PERMANENT INSTALLATION*	SF	80078.000
	5	549 70 206	RETAINING WALL (TENSAR) *	SF	17275.000
	3	563 2	ANTI GRAFFITI COATING	SF	151652.000
	5	1622 11 33	BRIDGE HANGERS (FBI)(GALVANIZED STEEL) (30")	EA	71.000
	5	1622 11 38	BRIDGE HANGERS (FBI)(GALVANIZED STEEL) (36")	EA	8.000
AA	2	528 70	REINFORCED EARTH WALL *	SF	57492.000
AB	2	545 70	RETAINED EARTH WALL *	SF	57492.000
AC	5	549 70 215	RETAINING WALL(PERMANENT)(HILFIKER SQUARE PANEL)*	SF	57492.000

NOTE: * IDENTIFIES ITEMS NORMALLY REQUIRING SHOP DRAWINGS CONTRACTOR SHALL DETERMINE OTHER ITEMS REQUIRING SHOP DRAWINGS.

REVISIONS

DATE	BY	DESCRIPTION
4-23-98	MAJ	ADDED ITEM NO. 549-70-215 WITH QUANTITY OF 57492 S.F. FOR BR. 770083 (ALT. AC)

FOR S.P. No. 77002-3503

FOR S.P. No. 77002-3505

Michael A. Jacobs

4/23/98

FOR S.P. No. 75011-3508

FOR REVISION ONLY

INDEX OF BRIDGE DRAWINGS

MAITLAND BOULEVARD OVER S.R. 434

SHEET NUMBER	SHEET TITLE
B-1	INDEX OF BRIDGE SHEETS
B-2	GENERAL NOTES
B-3	12",14",18",20",24" AND 30" PRESTRESSED CONCRETE PILES (1 OF 2)
B-4	12",14",18",20",24" AND 30" PRESTRESSED CONCRETE PILES (2 OF 2)
B-5	TRAFFIC RAILING BARRIER
B-6	STANDARD BAR BENDING DETAILS
B-7	PLAN
B-8	ELEVATION
B-9	PLAN VIEW FOR SPT BORINGS
B-10	REPORT OF SPT BORINGS FOR BRIDGE
B-11	REPORT OF SPT BORINGS FOR BRIDGE
B-12	FOUNDATION LAYOUT
B-13	END BENT 1 AND 2
B-14	END BENT DETAILS
B-15	FINISH GRADE ELEVATIONS
B-16	SUPERSTRUCTURE PLAN
B-17	SUPERSTRUCTURE SECTION
B-18	SUPERSTRUCTURE DETAILS
B-19	FRAMING PLAN
B-20	GIRDER ELEVATION
B-21	GIRDER DETAILS (1)
B-22	GIRDER DETAILS (2)
B-23	GIRDER DETAILS (3)
B-24	SIGNAL, SIGN & LIGHT ATTACHMENT DETAILS
B-25	CONDUIT IN TRAFFIC RAILING BARRIER
B-26	BEARING DETAILS
B-27	EXPANSION JOINT DETAILS
B-28	REINFORCING BAR LIST

RETAINING WALLS

SHEET NUMBER	SHEET TITLE
W-1	RETAINING WALL GENERAL NOTES (1)
W-2	RETAINING WALL GENERAL NOTES (2)
W-3	PLAN VIEW FOR SPT BORINGS
W-4	REPORT OF SPT BORINGS FOR WALLS
W-5	REPORT OF SPT BORINGS FOR WALLS
W-6	REPORT OF SPT BORINGS FOR WALLS
W-7	REPORT OF SPT BORINGS FOR WALLS
W-8	REPORT OF SPT BORINGS FOR WALLS
W-9	PLAN - RETAINING WALL W-1
W-10	ELEVATION - RETAINING WALL W-1 (1)
W-11	ELEVATION - RETAINING WALL W-1 (2)
W-12	PLAN - RETAINING WALL W-2
W-13	ELEVATION - RETAINING WALL W-2 (1)
W-14	ELEVATION - RETAINING WALL W-2 (2)
W-15	RETAINING WALL DETAILS (1)
W-16	RETAINING WALL DETAILS (2)
W-17 THRU W-25	REINFORCED EARTH STANDARD DETAILS
W-26 THRU W-34	VSL STANDARD DETAILS
△1 W-35 THRU W-43	HILFIKER MSE 5X5 PANEL WALL SYSTEM

LIST OF FREQUENTLY USED ABBREVIATIONS

AASHTO	—	AMERICAN ASSOCIATION OF STATE HIGHWAY AND TRANSPORTATION OFFICIALS
ADT	—	AVERAGE DAILY TRAFFIC
AISC	—	AMERICAN INSTITUTE OF STEEL CONSTRUCTION
ALT	—	ALTERNATE
ANSI	—	AMERICAN NATIONAL STANDARDS INSTITUTE
ASD	—	ALLOWABLE STRESS DESIGN
ASTM	—	AMERICAN SOCIETY FOR TESTING MATERIALS
B	—	BOTTOM
BE	—	BURIED ELECTRIC
BLDG	—	BUILDING
BRG	—	BEARING
BT	—	BURRIED TELEPHONE CABLE
℄	—	CENTER TO CENTER
CATV	—	CABLE TELEVISION
CIP	—	CAST-IN-PLACE
CJ	—	CONSTRUCTION JOINT
DJS	—	DECK JOINT SEAL
EB	—	END BENT
EF	—	EACH FACE
EL	—	ELEVATION
EOL	—	EDGE OF LANE
EOP	—	EDGE OF PAVEMENT
ES	—	EACH SIDE
EW	—	EACH WAY
EXIST	—	EXISTING
EXP	—	EXPANSION
FB	—	FIELD BEND
FDOT	—	FLORIDA DEPARTMENT OF TRANSPORTATION
FF	—	FAR FACE
FFAS	—	FRONT FACE OF APPROACH SLAB
FFBW	—	FRONT FACE OF BACKWALL
FFRW	—	FRONT FACE OF RETAINING WALL
FM	—	FORCE MAIN
FO	—	FIBER OPTICS
GDR	—	GIRDER
IF	—	INSIDE FACE
LME	—	LOW MEMBER ELEVATION
LVC	—	LENGTH OF VERTICAL CURVE
MHC	—	MINIMUM HORIZONTAL CLEARANCE
MH	—	MANHOLE
MHW	—	MEAN HIGH WATER
MIN	—	MINIMUM
MISC	—	MISCELLANEOUS
MLW	—	MEAN LOW WATER
MVC	—	MINIMUM VERTICAL CLEARANCE
MOT	—	MAINTENANCE OF TRAFFIC
NF	—	NEAR FACE
NHW	—	NORMAL HIGH WATER
NTS	—	NOT TO SCALE
OE	—	OVERHEAD ELECTRIC
OF	—	OUTSIDE FACE
OFM	—	OWNER FURNISHED MATERIAL
OT	—	OVERHEAD TELEPHONE
PC	—	POINT OF CURVATURE
PG	—	PROFILE GRADE
PGL	—	PROFILE GRADE LINE
PI	—	POINT OF INTERSECTION
PMVC	—	POINT OF MINIMUM VERTICAL CLEARANCE
POC	—	POINT ON CURVE
POT	—	POINT ON TANGENT
PT	—	POINT OF TANGENCY
R or RAD	—	RADIUS
RDWY	—	ROADWAY
REQ'D	—	REQUIRED
RR	—	RAILROAD
R/W	—	RIGHT OF WAY
SBL	—	SLOPE BREAK LINE
SHLD	—	SHOULDER
SIP	—	STAY-IN-PLACE
SPT	—	STANDARD PENETRATION TEST
T	—	TOP
TC	—	TANGENT TO CURVE AT INTERSECTION POINT
TS	—	TANGENT TO SPIRAL AT INTERSECTION POINT
TYP	—	TYPICAL
UGE	—	UNDERGROUND ELECTRIC
UNO	—	UNLESS NOTED OTHERWISE
WL	—	WORK LINE
WP	—	WORK POINT
BK	—	BACK (REFERENCED TO DIRECTION OF STATIONING)
AH	—	AHEAD (REFERENCED TO DIRECTION OF STATIONING)
LT	—	LEFT (REFERENCED TO DIRECTION OF STATIONING)
RT	—	RIGHT (REFERENCED TO DIRECTION OF STATIONING)

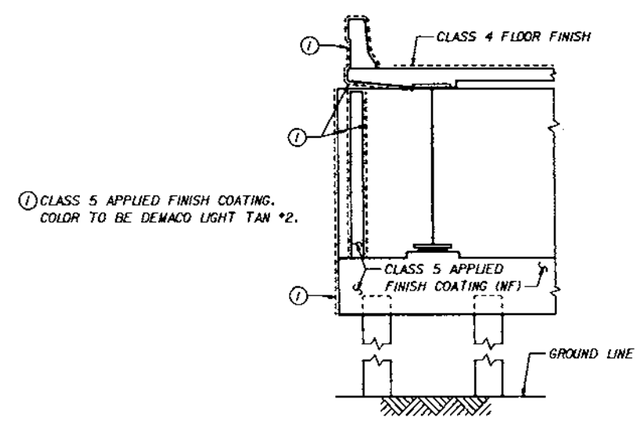

1 CLASS 5 APPLIED FINISH COATING. COLOR TO BE DEMACO LIGHT TAN #2.

END BENT
(RETAINING WALL NOT SHOWN)

TYPICAL SURFACE FINISH DETAILS

SURFACE FINISH

1. FINISH IN ACCORDANCE WITH ARTICLE 400-15.2 OF THE SPECIFICATIONS UNLESS NOTED OTHERWISE.
2. ALL EXPOSED SURFACES OF END BENT AS SHOWN AND TRAFFIC RAILING BARRIERS SHALL RECEIVE A "CLASS 5 APPLIED FINISH COATING". SEE DETAILS.
3. THE BRIDGE FLOOR AND APPROACH SLAB TOP SURFACES BOUNDED BY THE GUTTER LINES AND BEGIN APPROACH SLAB 1 AND END APPROACH SLAB 2, SHALL RECEIVE A "CLASS 4 FLOOR FINISH." SEE DETAILS.

WPI NO. 5117764

REVISIONS

Date	By	Description	Date	By	Description
4/23/98	MSE	△1 ADDED HILFIKER WALLS TO INDEX			

	Names	Dates
Drawn by	DCW	8/97
Checked by	MH	8/97
Designed by	MSE	8/97
Checked by	MH	8/97
Approved by	MARK S. EICHOLTZ	

ENGINEER OF RECORD: URS Greiner, Inc. P.O. BOX 31-6, 7400 WEST COURTNEY CAMPBELL CAUSEWAY TAMPA, FLORIDA 33607-1462

LOGO: URS Greiner

SEAL: Mark S. Eicholtz 4/23/98

FLORIDA DEPARTMENT OF TRANSPORTATION
STRUCTURES DESIGN OFFICE

ROAD NO.	COUNTY	PROJECT NO.
SR 414	SEMINOLE	77002-3505

SHEET TITLE: INDEX OF BRIDGE SHEETS

PROJECT NAME: S.R. 414 OVER S.R. 434

Drawing No.

Index No.

FED. ROAD DIV. NO.	STATE	PROJECT NO.	FISCAL YEAR	SHEET NO.
3	FLA.	—		B-2

CONSTRUCTION SPECIFICATIONS :

1. FLORIDA DEPARTMENT OF TRANSPORTATION STANDARD SPECIFICATIONS FOR ROAD AND BRIDGE CONSTRUCTION, DATED 1991 AND SUPPLEMENTS THERETO.
2. SPECIAL PROVISIONS.

DESIGN SPECIFICATIONS :

1. DESIGN IN ACCORDANCE WITH THE 1996 SIXTEENTH EDITION OF THE AASHTO "STANDARD SPECIFICATIONS FOR HIGHWAY BRIDGES", AND THE FLORIDA DEPARTMENT OF TRANSPORTATION. "STRUCTURES DESIGN GUIDELINES", NO. 625-020-150B WITH REVISIONS THROUGH JULY 1, 1997 (CONVERTED TO CUSTOMARY UNITS).
2. DESIGN IS ALSO IN ACCORDANCE WITH AASHTO-AGC-ARTBA TASK FORCE 27 "IN SITU SOIL IMPROVEMENT TECHNIQUES", DATED JANUARY 1990.

DESIGN METHOD :

1. ALL MAJOR COMPONENTS ARE DESIGNED FOR LOAD FACTOR DESIGN EXCEPT FOR BEARINGS WHICH ARE DESIGNED BY SERVICE LOAD (ASD).

DESIGN LOADING :

1. HS20-44 MODIFIED FOR MILITARY LOADING AS REQUIRED.
2. EARTHQUAKE - DESIGN REQUIREMENTS FOR SINGLE SPAN BRIDGES.
3. DESIGN TEMPERATURES FOR THERMAL LOADS:

	MEAN	RISE FROM MEAN	FALL FROM MEAN	RANGE	COEFFICIENT OF THERMAL EXPANSION
STEEL BEAMS	70° F	35° F	35° F	70° F	6.5 x 10^{-6} PER °F

4. DISTRIBUTION VALUES:

LOCATION	INTERIOR BEAMS	EXTERIOR BEAMS
LIVE LOADS (LANE PER BEAM)	S/11	S/11
TRAFFIC RAILING BARRIER (PLF PER BEAM)	836/N	836/N
WEARING SURFACE (PLF PER BEAM)	1,425/N	1,425/N
STAY-IN-PLACE METAL FORMS (PLF PER BEAM)	203	203
RAISED MEDIAN (PLF PER BEAM)	1,397/N	1,397/N

S = BEAM SPACING
N = NUMBER OF BEAMS

5. WIND LOADS SHALL BE COMPUTED IN ACCORDANCE WITH AASHTO ARTICLE 3.15 FOR A 100 MILE PER HOUR WIND.

FUTURE WEARING SURFACE :

1. DESIGNED FOR 15 POUNDS PER SQUARE FOOT FUTURE WEARING SURFACE.
2. FUTURE WEARING SURFACE SHALL NOT BE PLACED OVER EXPANSION JOINTS.

STAY-IN-PLACE METAL FORMS :

1. DESIGN INCLUDED ALLOWANCE FOR 20 LBS. PER SQ. FT. FOR THE UNIT WEIGHT OF METAL CELLULAR FORMS PROJECTED OVER THE PLAN AREA OF THE METAL FORMS.
2. STEEL STAY-IN-PLACE FORMS ARE PERMITTED, AND SHALL COMPLY WITH ARTICLE 400-5.7 OF THE SPECIFICATIONS.

CONCRETE :

1. PROVIDE ¾" CHAMFERS ON ALL EXPOSED EDGES, UNLESS NOTED OTHERWISE.
2. CONSTRUCTION JOINTS WILL BE PERMITTED ONLY AT LOCATIONS INDICATED ON PLANS. ADDITIONAL CONSTRUCTION JOINTS OR ALTERATIONS TO THOSE SHOWN SHALL REQUIRE WRITTEN APPROVAL OF THE ENGINEER.
3. CONCRETE SHALL CONFORM TO SECTION 346 OF THE SPECIFICATIONS.
4. CONCRETE STRESSES:

CLASS OF CONCRETE	MINIMUM 28 DAY COMPRESSIVE STRENGTH (PSI)	LOCATION OF CONCRETE
II	3400	SUBSTRUCTURE
II (BRIDGE DECK)	4500	SUPERSTRUCTURE
II	3400	TRAFFIC RAILING BARRIER
V (SPECIAL)	6000	PRESTRESSED PILES

ENVIRONMENTAL CLASSIFICATION :

1. SUPERSTRUCTURE : NON-CORROSIVE (SLIGHTLY AGGRESSIVE)
2. SUBSTRUCTURE :
   STEEL: NON-CORROSIVE (SLIGHTLY AGGRESSIVE)
   CONCRETE: NON-CORROSIVE (SLIGHTLY AGGRESSIVE)

REINFORCING STEEL :

1. REINFORCING STEEL SHALL BE ASTM A615, GRADE 60.
2. ALL DIMENSIONS PERTAINING TO LOCATION OF REINFORCING STEEL ARE TO CENTERLINE OF BARS EXCEPT WHERE CLEAR DIMENSION IS NOTED TO FACE OF CONCRETE.
3. REINFORCING STEEL DETAIL DIMENSIONS ARE OUT-TO-OUT OF BARS.
4. CONCRETE COVER ON REINFORCING STEEL SHALL BE AS FOLLOWS, UNLESS NOTED OTHERWISE.

LOCATION	CONCRETE COVER
END BENTS	3", 4" CAST AGAINST EARTH OR WATER
SLAB	2"

5. CONCRETE COVER SHOWN IN THE PLANS DO NOT INCLUDE PLACEMENT AND FABRICATION TOLERANCES UNLESS SHOWN AS "MINIMUM COVER". FOR PLACEMENT TOLERENCES SEE FDOT SPECIFICATIONS. FOR FABRICATION TOLERENCES SEE CRSI MANUAL OF STANDARD PRACTICE.

SUPERSTRUCTURES :

1. THE RIDING SURFACE OF THE BRIDGE DECK SHALL BE SCREEDED TO THE FINISH GRADE ELEVATIONS SHOWN ON SHEET B-15.

END BENTS :

1. TOP OF TRAFFIC RAILING BARRIER SHALL BE CONSTRUCTED PARALLEL TO GRADE.
2. REINFORCING STRAPS ATTACHED TO THE END BENTS AND BACKFILL UP TO THE TOP OF THE BACKWALL SHALL BE IN PLACE BEFORE GIRDERS ARE ERECTED.
3. REINFORCING STRAPS ATTACHED TO THE END BENT BACKWALL ARE REQUIRED PER THE RETAINING WALL GENERAL NOTES AND SHALL BE INCLUDED IN THE COST OF THE MSE WALLS.

PILES :

1. 24" SQUARE PRESTRESSED CONCRETE PILES SHALL BE USED.
2. THE CONTRACTOR SHALL MAINTAIN A NOISE LEVEL LESS THAN 95db (A-WEIGHTED, SLOW RESPONSE) AT OR BEYOND THE RIGHT-OF-WAY LINE BETWEEN THE HOURS OF 7:00 AM AND 7:00 PM. THE CONTRACTOR SHALL MAINTAIN A NOISE LEVEL LESS THAN 5db OVER AMBIENT NOISE LEVEL (A-WEIGHTED, SLOW RESPONSE) AT OR BEYOND THE RIGHT-OF-WAY LINE BETWEEN THE HOURS OF 7:00 PM AND 7:00 AM. METHODS TO MAINTAIN NOISE WITHIN ACCEPTABLE LIMITS SHALL INCLUDE BUT NOT BE LIMITED TO TEMPORARY NOISE BARRIERS, ENCLOSURES FOR EQUIPMENT, MUFFLERS ETC.
3. THE CONTRACTOR SHALL PROVIDE SURVEYS AND VIBRATION MONITORING FOR ALL STRUCTURES AT THE FOLLOWING ADDRESSES:

ORANOLE RD.	WINFIELD ST.	JOYANN ST.	S.R. 434 SOUTH
2900	2902	2901	940 AUTO DEALERSHIP
2904	2903		
2908	2906	FOREST CITY COVE	
2912	2907	9401 AUTO BODY	
3002	2910	9411 FIRE DEPT.	
3006	2911	9415 CITY DEPT.	
	2914	9423 GEN. REPAIR SERVICE	
	2915		
	3004		
	3005		

THE SURVEY AND VIBRATION MONITORING PROCEDURES SHALL MEET THE REQUIREMENTS OF SPECIFICATION A455-3.J EXCEPT INITIAL SURVEYS SHALL BE CONDUCTED PRIOR TO ANY WORK OCCURING AT THE PROJECT SITE. THE CONTRACTOR'S SURVEYS SHALL INCLUDE ALL ROOMS AND FLOORS OF THE STRUCTURES LISTED. VIBRATION MONITORING OF THE ABOVE STRUCTURES IS REQUIRED DURING INSTALLATION OF ALL TEST PILES, PRODUCTION PILES AND DURING THE COMPACTION OPERATION FOR THE MSE WALL CONSTRUCTION. THE CONTRACTOR SHALL ALSO MONITOR FOR SETTLEMENT AS REQUIRED IN SPECIFICATION A455-3.J. ALL COSTS TO MEET THESE REQUIREMENTS AND THE NOISE REQUIREMENTS OF NOTE 2 SHALL BE INCLUDED IN BID ITEM 455-18.

4. FOR NOTES REGARDING INSTALLATION AND DESIGN LOADS FOR PILES, SEE FOUNDATION LAYOUT SHEET.

TEST PILES :

1. FOR NOTES REGARDING TEST PILES, SEE FOUNDATION LAYOUT SHEET.

BRIDGE FLOOR GROOVING :

1. BRIDGE FLOOR GROOVING SHALL BE IN ACCORDANCE WITH THE SPECIFICATIONS.

MAINTENANCE OF TRAFFIC :

1. FOR MOT NOTES SEE SHEET B-18 AND ROADWAY'S TRAFFIC CONTROL SHEETS.

UTILITIES :

1. UTILITIES SHOWN ON THE BRIDGE DRAWINGS ARE IN THE APPROXIMATE LOCATIONS AND SHALL BE VERIFIED BY THE CONTRACTOR AS REQUIRED FOR CONSTRUCTION. SEE ROADWAY PLANS, SIGNALIZATION PLANS AND LIGHTING PLANS FOR ADDITIONAL INFORMATION AND COMPLETE LAYOUT OF ALL UTILITIES.
2. FOR RELOCATION OF THE 14" FORCE MAIN, SEE UTILITY RELOCATION SHEETS SPN 77002-6502.

FUTURE BEARING REPLACEMENT :

1. FOR NOTES REGARDING FUTURE BEARING REPLACEMENT, SEE SHEET B-26.

ELEVATIONS :

1. ELEVATIONS ARE ACCORDING TO NATIONAL GEODETIC VERTICAL DATUM (NGVD) OF 1929.

DIMENSIONS :

1. ALL DIMENSIONS ARE MEASURED HORIZONTALLY AND VERTICALLY UNLESS NOTED OTHERWISE.

STRUCTURAL STEEL :

1. ALL STRUCTURAL STEEL SHALL BE IN ACCORDANCE WITH ASTM A709, GRADE 50, EXCEPT THAT STIFFENERS, CROSS FRAMES AND END DIAPHRAGMS MAY BE GRADE 36, UNLESS NOTED OTHERWISE.
2. SOLE PLATES FOR BEARING ASSEMBLIES SHALL BE ASTM A709, GRADE 50.
3. ANCHOR BOLTS SHALL BE IN ACCORDANCE WITH ASTM SPECIFICATION A307. THE ANCHOR BOLTS, NUTS AND WASHERS SHALL BE HOT-DIP GALVANIZED IN ACCORDANCE WITH ASTM SPECIFICATION A153.
4. ALL CONNECTIONS SHALL BE MADE WITH HIGH STRENGTH ASTM A325 (TYPE I) ⅞" DIA. BOLTS DESIGNATED AS A SLIP CRITICAL (CLASS A CONTACT SURFACE) CONNECTIONS UNLESS NOTED OTHERWISE.
5. PAINTING SHALL BE A 3 COAT SYSTEM, IN ACCORDANCE WITH SECTION 561 OF THE CONSTRUCTION SPECIFICATION - SELF CURING INORGANIC ZINC COATING SYSTEMS. FINISH COAT COLOR TO BE FEDERAL STANDARD 595B COLOR NO. 14066 (GREEN).
6. ALL A709 MATERIALS AS DESIGNATED IN THE PLANS SHALL MEET THE CHARPY V-NOTCH IMPACT REQUIREMENTS FOR TEMPERATURE ZONE I IN ACCORDANCE WITH ASTM SPECIFICATIONS A709 AND SUPPLEMENTARY REQUIREMENT S83. ALL OTHER STRUCTURAL STEEL SHALL MEET THE CHARPY V-NOTCH TEST REQUIREMENTS SPECIFIED IN SECTION 962, TABLE A, OF FDOT SPECIFICATIONS.
7. THE CONTRACTOR SHALL MAINTAIN STABILITY OF THE GIRDERS UNTIL THE CROSS-FRAMES AND END DIAPHRAGMS HAVE BEEN ERECTED AND THE CONCRETE DECK HAS CURED.
8. SHOP DRAWINGS SHALL BE SUBMITTED SHOWING THE STRUCTURAL STEEL ASSEMBLY AND ERECTION SCHEME.
9. FABRICATORS OF STRUCTURAL STEEL GIRDERS AND GIRDER FRAMING SHALL HAVE AISC QUALITY CERTIFICATION FOR MAJOR STEEL BRIDGES.

WELDING :

1. THE PROPORTIONING OF WELD DETAILS AND THE OPERATION OF WELDING SHALL BE IN ACCORDANCE WITH THE CURRENT EDITION OF THE ANSI/AASHTO/AWS D1.5 BRIDGE WELDING CODE. ALL WELDS SHALL BE CONTINUOUS UNLESS NOTED OTHERWISE. WELDS REQUIRING NONDESTRUCTIVE TESTING SHALL BE RADIOGRAPHICALLY INSPECTED, EXCEPT WHERE THE GEOMETRY OF THE REGION OF THE WELD WILL NOT PERMIT SATISFACTORY INFORMATION TO BE SECURED FOR VERIFICATION OF THE WELD QUALITY. WHEN SUCH GEOMETRICAL CONDITIONS EXIST, OTHER INSPECTION PROCEDURES OR COMBINATION OF PROCEDURES, SUCH AS ULTRASONIC INSPECTION, DYE PENETRANT INSPECTION, AND/OR MAGNETIC PARTICLE INSPECTION MAY BE REQUIRED. NO FIELD WELDING SHALL BE PERMITTED UNLESS NOTED.
2. SHOP SPLICES SHALL BE FULL PENETRATION BUTT JOINTS, GROOVE WELDED, AND FINISHED SMOOTH AND FLUSH WITH THE BASE METAL BY GRINDING IN THE DIRECTION OF APPLIED STRESSES.

BID ITEM NOTES

1. FOR "SUMMARY OF BRIDGE PAY ITEMS, SEE PRINTS OF COMPUTER (CES) OUTPUT".
2. PAYMENT FOR INCIDENTAL ITEMS NOT SPECIFICALLY COVERED IN THE INDIVIDUAL BID ITEMS SHALL BE INCLUDED IN THE CONTRACT PRICES FOR BID ITEMS.
3. THE FOLLOWING NUMBERS OF NON-STANDARD COMPOSITE NEOPRENE BEARING PADS (PAY ITEM 400-147) ARE REQUIRED:
   20 - (1'-10" x 1'-8" x 4¹⁄₃₂") NON-STANDARD COMPOSITE PADS
4. CONCRETE TRAFFIC RAILING BARRIER ON END BENT BACKWALL SHALL BE PAID FOR AT THE CONTRACT UNIT PRICE FOR CONCRETE AND REINFORCING STEEL AND HAVE BEEN INCLUDED IN THE QUANTITIES SHOWN ON INDIVIDUAL END BENT DRAWINGS.
5. BID ITEM NO. 400-7 INCLUDES 422 SQ. YD. OF APPROACH SLAB GROOVING.
6. THE TOTAL PLAN AREA OF APPROACH SLAB REQUIRED IS 506 SQ. YD. DETAILS AND PAYMENT OF APPROACH SLABS ARE INCLUDED IN THE ROADWAY PLANS.
7. THE COST OF ALL PREMOULDED EXPANSION JOINT MATERIAL AND INSTALLATION SHALL BE INCLUDED IN THE UNIT PRICE FOR CLASS II CONCRETE (SUPERSTRUCTURE).
8. PAYMENT FOR STRUCTURAL STEEL SHALL BE PAID FOR AS LUMP SUM. BID ITEM 460-2-1 STRUCTURAL STEEL (CARBON) SHALL INCLUDE ALL GRADE 36 STEEL, SHEAR CONNECTORS, HIGH STRENGTH BOLTS, ANCHOR BOLTS, NUTS AND WASHERS. BID ITEM 460-2-2 STRUCTURAL STEEL (LOW ALLOY) SHALL INCLUDE ALL GRADE 50 STEEL.

REVISIONS

Date	By	Description	Date	By	Description

	Names	Dates
Drawn by	DCW	8/97
Checked by	MH	8/97
Designed by	MSE	8/97
Checked by	ADS	8/97
Approved by	MARK S. EICHOLTZ	

ENGINEER OF RECORD:
URS Greiner, Inc.
P.O. BOX 31646, 7650 WEST
COURTNEY CAMPBELL CAUSEWAY
TAMPA, FLORIDA 33607-1462

LOGO: URS Greiner

SEAL: Mark S. Eicholtz 3/2/98

FLORIDA DEPARTMENT OF TRANSPORTATION
STRUCTURES DESIGN OFFICE

ROAD NO.	COUNTY	PROJECT NO.
SR 414	SEMINOLE	77002-3505

SHEET TITLE: GENERAL NOTES

PROJECT NAME: S.R. 414 OVER S.R. 434

Drawing No.

Index No.

PLOTTED: 27FEB98-10.40.00

$$DIAG: WAITLAND_CADD.FG BGNSMB02.FGBJ

FRAMMAIT

FED. ROAD DIV. NO.	STATE	PROJECT NO.	FISCAL YEAR	SHEET NO.
3	FLA.			B-3

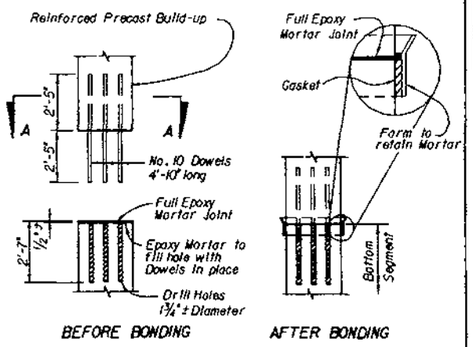

NOTE: Dowels shown for 24" Pile. See Sect. A-A for spacing and number of Dowels for each Pile.

REINFORCED PRECAST SPLICES
(Extensions 2' Min. but less than 5') (Not Drivable)

NOTE: The reinforced precast Build-up shall conform with the Specifications and Section A-A. Spiral ties pitch shall be 6" Max.

TABLE OF BONDED SPLICE DATA		
Drivable Splice	Min. Splice Length	No. 10 Dowel Length
YES	10'-0"	7'-5"
NO *	5'-0"	4'-10"

* For Splices less than 5'-0" (not Drivable), use the Reinforced Precast Splice.

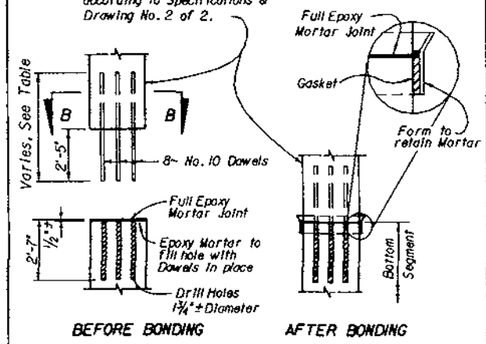

NOTE: Dowels shown for 24" Pile. See SECTION B-B for spacing & Number of Dowels for each Pile.

PRESTRESSED PRECAST SPLICES
(Extensions 5' or longer)

DETAILS FOR REINFORCED PRECAST & PRESTRESSED PRECAST PILE SPLICES

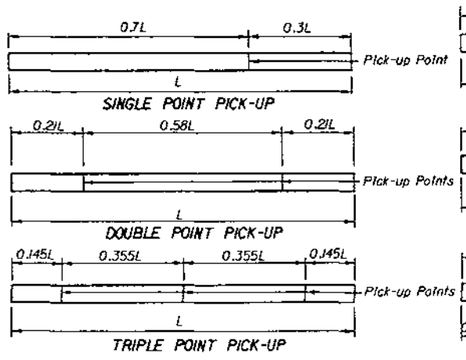

PILE PICK-UP DETAILS

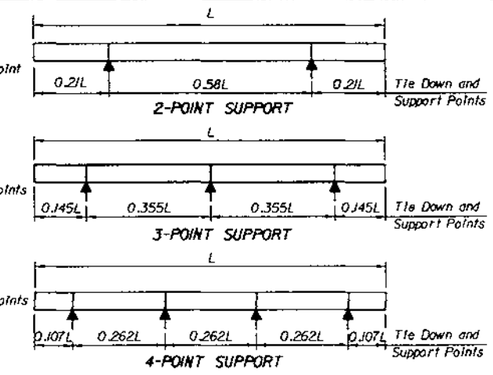

STORAGE AND TRANSPORTATION SUPPORT DETAILS

PILE SIZE	MAX. LENGTH "L" FOR PICK-UP		
	SINGLE POINT	DOUBLE POINT	TRIPLE POINT
12"	50'	70'	L > 70'
14"	55'	75'	L > 75'
18"	60'	90'	L > 90'
20"	65'	95'	L > 95'
24"	70'	100'	L > 100'
30"	90'	125'	L > 125'

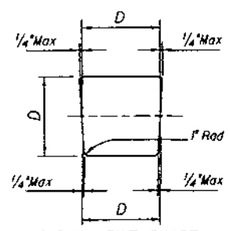

TYPICAL PILE SHAPE FOR MOLD FORMS

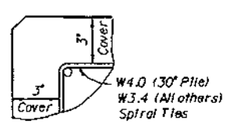

TYPICAL DETAIL SHOWING COVER DIMENSION

* For actual prestressing strand pattern, see Drawing 2 of 2.

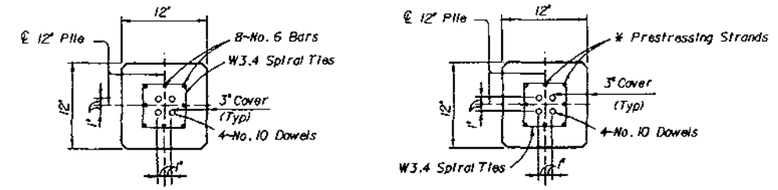

SECTION A-A
(See Reinf. Precast Splice Detail)

SECTION B-B
(See Prstr. Precast Splice Detail)

12" PILE

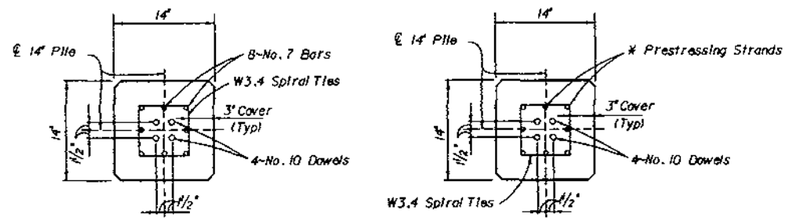

SECTION A-A
(See Reinf. Precast Splice Detail)

SECTION B-B
(See Prstr. Precast Splice Detail)

14" PILE

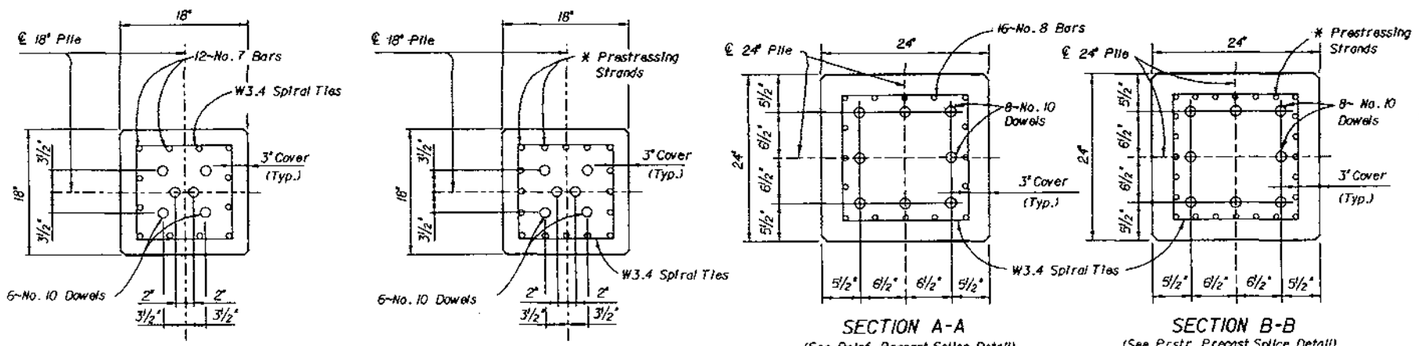

SECTION A-A
(See Reinf. Precast Splice Detail)

SECTION B-B
(See Prstr. Precast Splice Detail)

18" PILE

24" PILE

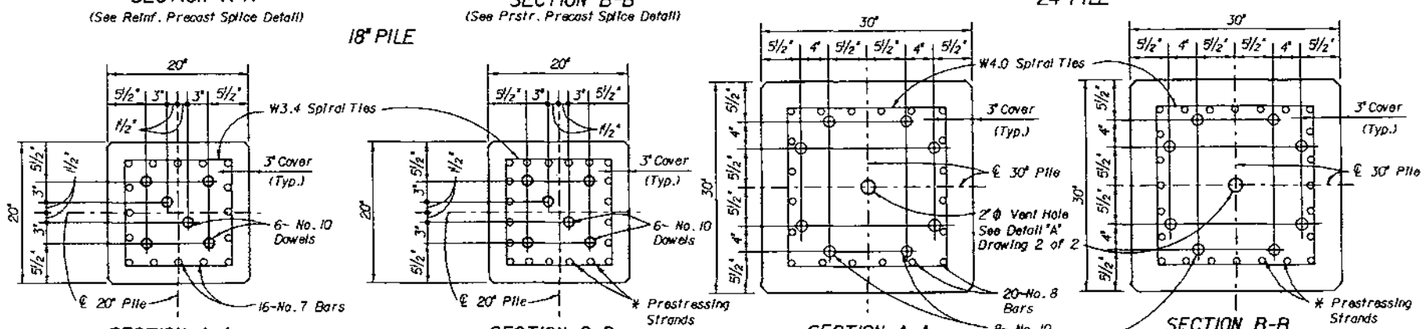

SECTION A-A
(See Reinf. Precast Splice Detail)

SECTION B-B
(See Prstr. Precast Splice Detail)

20" PILE

30" PILE

REVISIONS					
Date	By	Description	Date	By	Description
			94R		

	Names	Dates
Drawn by	TGA	1-91
Checked by	AJG	5-91
Designed by		
Checked by		
Approved by	NICHOLS/AJG	

ENGINEER OF RECORD:
STRUCTURES DESIGN OFFICE
CENTRAL OFFICE
605 Suwannee Street, MS 33
Tallahassee, Florida 32399-0450

LOGO:

SEAL:

FLORIDA DEPARTMENT OF TRANSPORTATION
STRUCTURES DESIGN OFFICE

ROAD NO.	COUNTY	PROJECT NO.
SR 414	SEMINOLE	77002-3505

SHEET TITLE: 12", 14", 18", 20", 24", AND 30" PRESTRESSED CONCRETE PILES

PROJECT NAME: S.R. 414 OVER S.R. 434

Drawing No. 1 of 2

Index No. 600

16 JAN 98 10:24:29

r:\projects\cadd\mattland\bfndmb01.dgn

FED. ROAD DIV. NO.	STATE	PROJECT NO.	FISCAL YEAR	SHEET NO.
3	FLA.			B-4

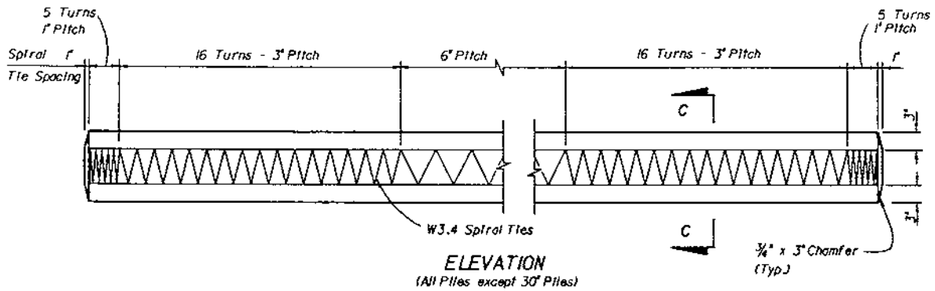

ELEVATION
(All Piles except 30" Piles)

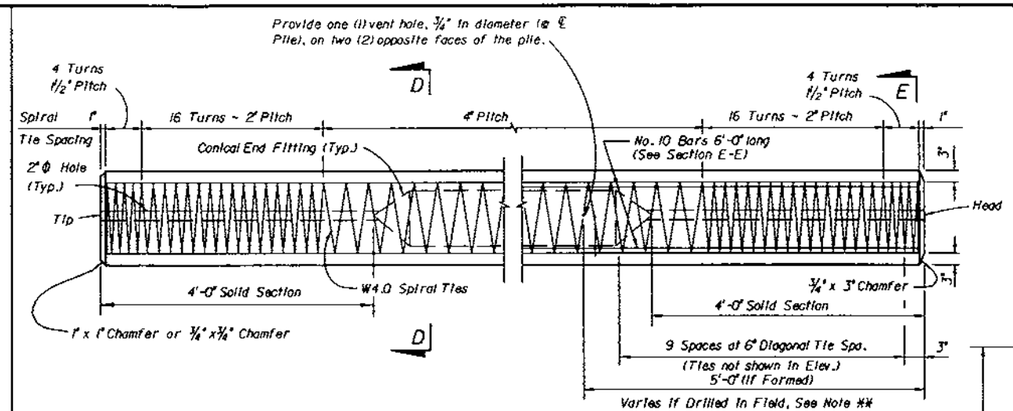

ELEVATION
(30" Piles)

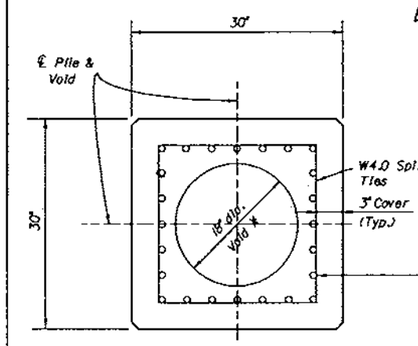

* Omit Void at Ends, see Elevation View

SECTION D-D
30" PILE

ALTERNATE STRAND PATTERN ***

20 ~ 9/16" Φ, Grade 270 (Spec.)LR.S. at 38,600# each
20 ~ 9/16" Φ, Grade 270 L.R.S. at 38,880# each
24 ~ 1/2" Φ, Grade 270 (Spec.)LR.S. at 32,300# each
24 ~ 9/16" Φ, Grade 270 S.R. at 35,000# each
24 ~ 9/16" Φ, Grade 270 (Spec.)S.R. at 35,200# each
28 ~ 1/2" Φ, Grade 270 L.R.S. at 28,100# each
28 ~ 1/2" Φ, Grade 270 (Spec.)S.R. at 30,200# each

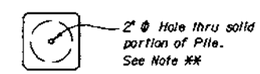

DETAIL "A"

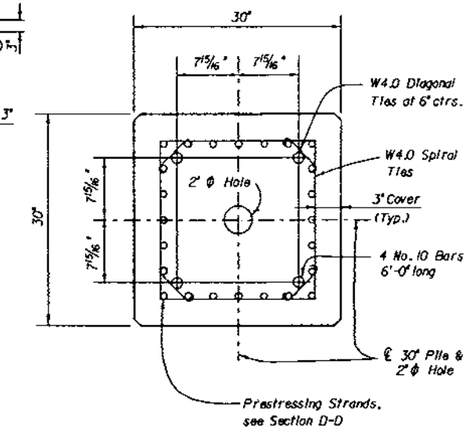

SECTION E-E
30" PILE

** NOTE:
The 18" Φ Void in the pile shall be positively vented to water or air after the final pile installation. If the 3/4" Φ vents are included in the pile cut-off section, two (2) new holes, 3/4" in diameter , shall be drilled on two (2) opposite faces of the pile below the bottom of substructure elevation. If the pile void can not be vented directly to water or air, then venting shall be provided by the use of a 1" Φ P.V.C. conduit through the 2" Φ hole(s) or the the 18" Φ void to the outside. This might involve venting through a substructure cap or column. Voids between segments of spliced piles shall be connected by 2" Φ hole(s). See Detail "A".

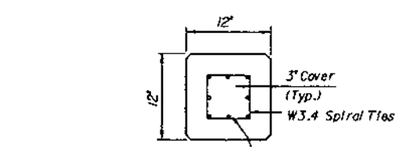

ALTERNATE STRAND PATTERN ***

8 ~ 7/16" Φ, Grade 270 L.R.S. at 21,700# each
8 ~ 1/2" Φ, Grade 250 S.R. at 24,100# each
12 ~ 3/8" Φ, Grade 270 L.R.S. at 14,800# each
12 ~ 3/8" Φ, Grade 270 S.R. at 15,600# each

SECTION C-C
12" PILE

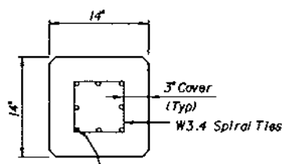

ALTERNATE STRAND PATTERN ***

8 ~ 1/2" Φ, Grade 270 (Spec.)LR.S. at 30,000# each
8 ~ 1/2" Φ, Grade 270 (Spec.)S.R. at 31,570# each
8 ~ 1/2" Φ, Grade 270 L.R.S. at 29,500# each
12 ~ 7/16" Φ, Grade 270 S.R. at 21,200# each
12 ~ 1/2" Φ, Grade 250 S.R. at 22,600# each
16 ~ 3/8" Φ, Grade 270 S.R. at 16,070# each

SECTION C-C
14" PILE

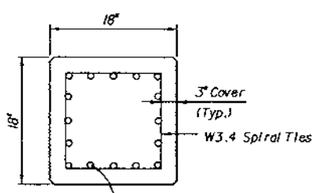

ALTERNATE STRAND PATTERN ***

12 ~ 1/2" Φ, Grade 270 (Spec.) L.R.S. at 32,400# each
12 ~ 9/16" Φ, Grade 270 S.R. at 35,100# each
16 ~ 1/2" Φ, Grade 270 S.R. at 26,800# each
20 ~ 7/16" Φ, Grade 270 L.R.S. at 20,000# each
20 ~ 7/16" Φ, Grade 270 S.R. at 21,100# each
24 ~ 3/8" Φ, Grade 270 L.R.S. at 16,300# each

SECTION C-C
18" PILE

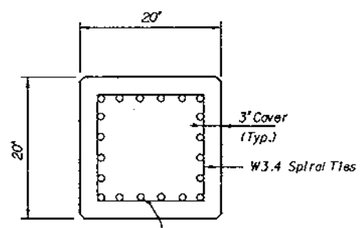

ALTERNATE STRAND PATTERN ***

16 ~ 1/2" Φ, Grade 270 L.R.S. at 30,000# each
16 ~ 1/2" Φ, Grade 270 (Spec.) S.R. at 31,570# each
20 ~ 1/2" Φ, Grade 270 S.R. at 26,500# each
24 ~ 7/16" Φ, Grade 270 L.R.S. at 20,500# each
24 ~ 7/16" Φ, Grade 270 S.R. at 21,740# each

SECTION C-C
20" PILE

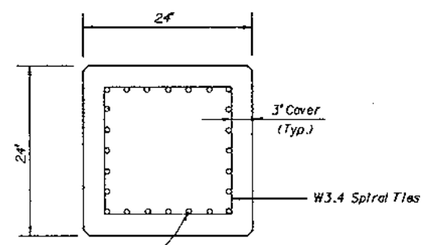

ALTERNATE STRAND PATTERN ***

20 ~ 1/2" Φ, Grade 270 (Spec.)L.R.S. at 33,820# each
20 ~ 9/16" Φ, Grade 270, S.R. 270 at 36,290# each
20 ~ 9/16" Φ, Grade 270 (Spec.)S.R. at 37,050# each
24 ~ 1/2" Φ, Grade 270 L.R.S. at 29,000# each
24 ~ 1/2" Φ, Grade 270 (Spec.)S.R. at 31,570# each

SECTION C-C
24" PILE

*** NOTE:
Any of the given Alternate Strand Patterns may be utilized. The strands shall be located as follows : place one strand at each corner and place the remaining strands equally spaced between the corner strands.
The Total strand pattern shall be concentric with the nominal concrete section of the pile.

NOTE:
CONTRACTOR OPTION: The 30" pile may be cast SOLID by omitting the 18" void, the 2" holes, and the 3/4" vent holes. In this event, the Contractor shall submit for approval calculations and a proposed strand configuration that provide net prestressing after losses equal to 1000 psi.

REVISIONS

Date	By	Description	Date	By	Description
			94R		

	Names	Dates
Drawn by	TGA	1-91
Checked by	AJG	5-91
Designed by		
Checked by		
Approved by	NICHOLS/AJG	

ENGINEER OF RECORD:
STRUCTURES DESIGN OFFICE
CENTRAL OFFICE
605 Suwannee Street, MS 33
Tallahassee, Florida 32399-0450

LOGO:

SEAL:

FLORIDA DEPARTMENT OF TRANSPORTATION
STRUCTURES DESIGN OFFICE

ROAD NO.	COUNTY	PROJECT NO.
SR 414	SEMINOLE	77002-3505

SHEET TITLE: 12", 14", 18", 20", 24", AND 30" PRESTRESSED CONCRETE PILES

PROJECT NAME: S.R. 414 OVER S.R. 434

Drawing No. 2 of 2

Index No. 600

16 JAN 98 10:25:01

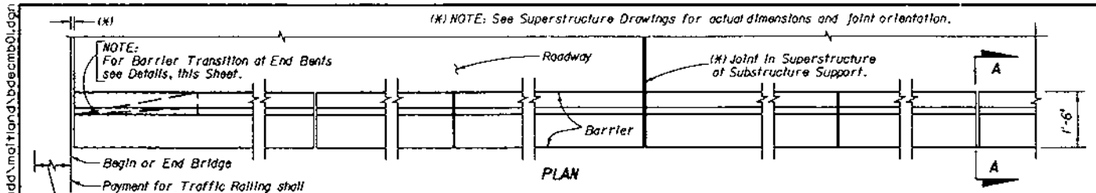

PLAN

** NOTE: ¾" Open Joints shall be provided at:
1 - Substructure supports where superstructure slab is continuous.
2 - Midspan where span length exceeds 90 feet.
3 - Intermediate locations (equally spaced) between midspan and substructure support where span length exceeds 180 feet.

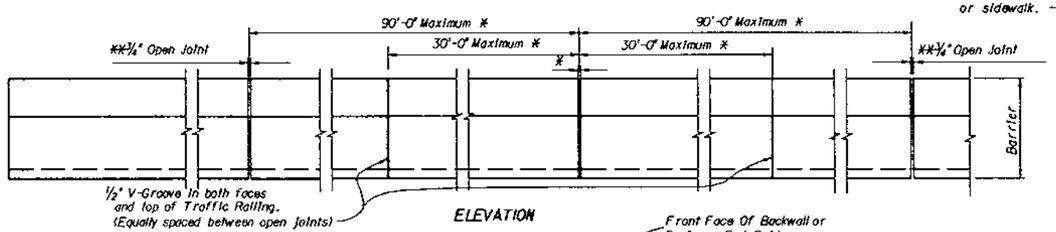

ELEVATION

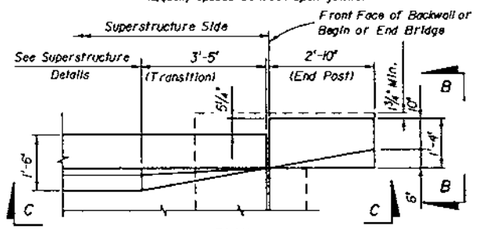

PLAN
(See Note 'A')

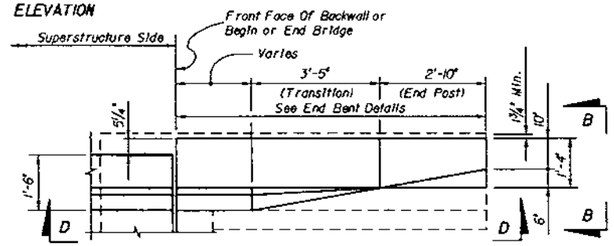

PLAN
(See Note 'B')

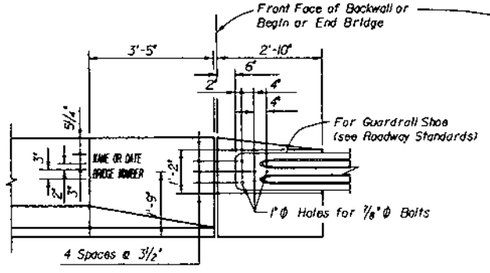

VIEW C-C

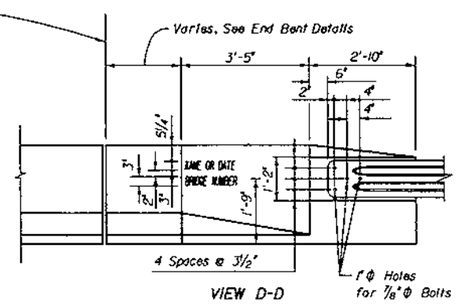

VIEW D-D

NOTE 'A':
If Barrier Transition is required and the Superstructure Depth (thickness) is 25" or less, the Transition shall be provided on the Superstructure side. To accommodate the Transition on the Superstructure the Reinforcement (Bars 5V, 5P & 4S) will need adjusting. The 1'-2" portion of Bars 5V shall be bent to fit and the horizontal 10" portion along the bottom shall be cut at the center.

NOTE 'B':
If Barrier Transition is required and the Superstructure Depth (thickness) exceeds 25 ", the Barrier Transition shall be provided on the End Bent side.

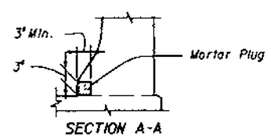

SECTION A-A

NOTE: When open joint in Barrier is not coincident with joint in the superstructure, the lower 3" portion of the open joint shall be plugged by filling with mortar in accordance with Article 400-15.1.

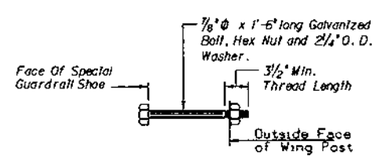

BOLT DETAIL

NOTE: The Cost of Bolts is to be included in the Contract Unit Price for Guardrail

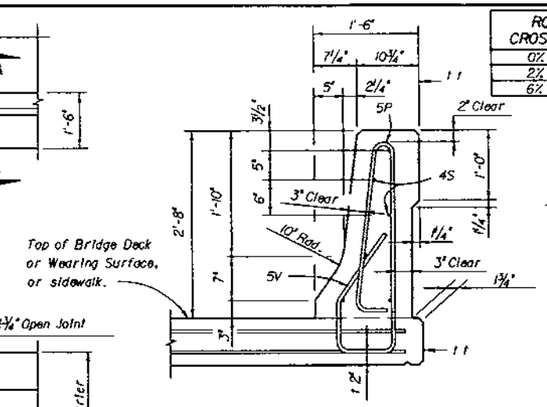

TYPICAL SECTION THRU TRAFFIC RAILING

t For Slabs 8" thick or less. If Slab is thicker than 8" or Barrier is located on a Retaining Wall, embed Bar 5V 6".

t t Where Barriers of adjacent bridges are to be built back to back, the outside vertical plane of the Barrier and Slab may coincide if so shown on the Superstructure Plans.

ROADWAY CROSS-SLOPE	LOW GUTTER Φ1	LOW GUTTER Φ2	HIGH GUTTER Φ1	HIGH GUTTER Φ2
0% to 2%	90°	90°	90°	90°
2%+ to 6%	93°	87°	87°	93°
6%+ to 10%	96°	84°	84°	96°

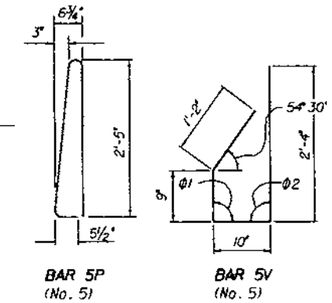

BAR 5P (No. 5)

BAR 5V (No. 5)

BENDING DIAGRAMS

BAR BENDING NOTES

1. All bar dimensions in the bending diagrams are out to out.
2. Bars 5P and 5V shall be bent around a pin diameter = 2½".
3. The 9" and the 2'-4" vertical dimensions shown for Bar 5V are based on a bridge slab 8" thick or greater and without raised sidewalk or wearing surface. If the slab thickness is less than 8" decrease these dimensions by an amount equal to the difference in the thicknesses; and if a wearing surface or a raised sidewalk is to be provided, increase the dimensions by an amount equal to the wearing surface thickness or sidewalk thickness.
4. Reinforcement for Barrier on Retaining Wall shall be the same as detailed above for a 8" slab with Φ1 = Φ2 = 90°.

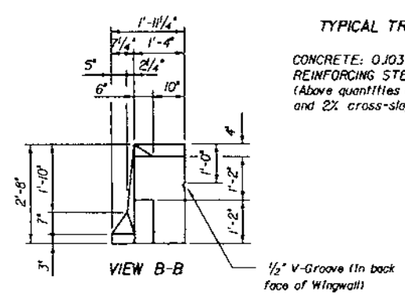

VIEW B-B

TYPICAL TRAFFIC RAILING QUANTITIES

CONCRETE: 0.103 c.y. per linear foot
REINFORCING STEEL: 20.49 lbs per linear foot
(Above quantities are based on 8" slab and 2% cross-slope).

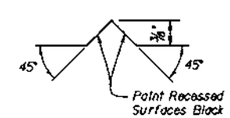

SECTION THRU RECESSED "V" GROOVE TO FORM INSCRIBED LETTERS AND FIGURES

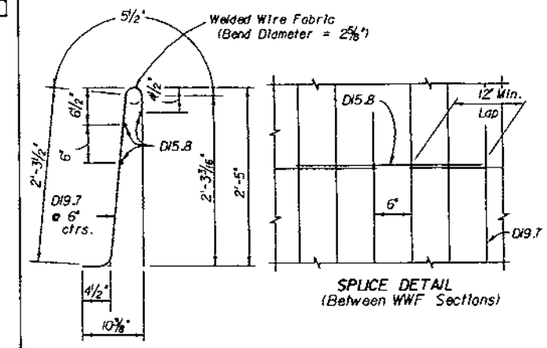

SPLICE DETAIL
(Between WWF Sections)

WELDED WIRE FABRIC

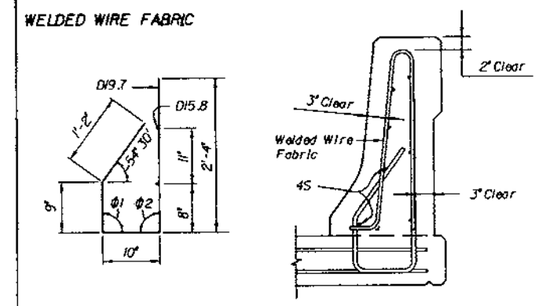

ALTERNATE REINFORCING DETAILS

The Contractor may utilize Welded Wire Fabric in lieu of all Bars 5P and 5V and Four (4) of the Bars 4S. Welded Wire Fabric shall conform to ASTM A497.

REINFORCING STEEL NOTES

Place longitudinal steel in bottom of slab as shown above to facilitate tying bars 5V. Do not add reinforcing steel for tie purposes.

All vertical reinforcing steel in Traffic Railing shall be No. 5 Bars spaced at 8" c.c. and all longitudinal reinforcing steel shall be No. 4 Bars. At all open joints all reinforcing shall have 2" minimum cover. At all construction joints Bars 4S (No. 4) may be continuous or spliced. All splices in Bars 4S shall be 1'-4" minimum.

TRAFFIC RAILING NOTES

CONCRETE AND REINFORCING STEEL: See General Notes.

PAYMENT: Traffic Railing on Bridges shall be paid for per linear foot (Item No. 400-148-1), which shall include all Concrete and Reinforcing Steel. Traffic Railing shall be measured along the centerline of the top surface of the concrete barrier.

MARKERS: Markers recording the elevation shall be placed on top of the Traffic Railing at End Bents. On bridges longer than 100 ft, one marker shall be placed at each end of the bridge. On bridges 100 ft or less, one marker shall be placed at one end of the bridge only. Markers are to be furnished by the Florida Department of Transportation and installed by the Contractor. The cost of installing the markers shall be included in the Contract Unit Price for Traffic Railing (Barrier).

TRAFFIC RAIL CONSTRUCTION: The contractor may construct the railing by the use of stationary removable forms or by the use of slip forms without altering the rail dimensions shown above.

SUPERELEVATED BRIDGES: At the option of the Contractor, Traffic Railing and End Bent Wing Posts on superelevated bridges, may be constructed perpendicular to the roadway surface. The cost of modifications shall be at the Contractor's expense.

BOLTS: Bolts, Nuts, and Washers shall be hot dip galvanized in accordance with ASTM A153.

RETAINING WALL: If the Barrier is to be provided on a retaining wall, the Barrier Section shall be as shown above. Other details such as transition for guardrail attachment, maximum spacing of ¾" open joint and ½" V-Groove shall also apply. See Wall Plans for Payment.

NAME AND BRIDGE NUMBER: The Name and Bridge Number to be placed on the Traffic Railing shall be seen on the driver's right when approaching bridge. The date is to be placed on the driver's left when approaching the bridge. The date shall be the year the bridge is constructed. Black plastic letters and figures 3" in height, as approved by the Engineer, may be used, in lieu of letters and figures formed by ⅛" V-Grooves. V-Grooves shall be formed by preformed letters and figures.

REVISIONS					
Date	By	Description	Date	By	Description
			94R		

	Names	Dates
Drawn by	WEH	2-89
Checked by	AJG	2-89
Designed by	—	—
Checked by	—	—
Approved by	AJG	

ENGINEER OF RECORD: STRUCTURES DESIGN OFFICE
605 Suwannee Street, MS 33
Tallahassee, Florida 32399-0450

LOGO:

SEAL:

FLORIDA DEPARTMENT OF TRANSPORTATION
STRUCTURES DESIGN OFFICE

ROAD NO.	COUNTY	PROJECT NO.
SR 414	SEMINOLE	77002-3505

SHEET TITLE: TRAFFIC RAILING BARRIER

Drawing No. 1 of 1

PROJECT NAME: S.R. 414 OVER S.R. 434

Index No. 700

FED. ROAD DIV. NO.	STATE	PROJECT NO.	FISCAL YEAR	SHEET NO.
3	FLA.			B-6

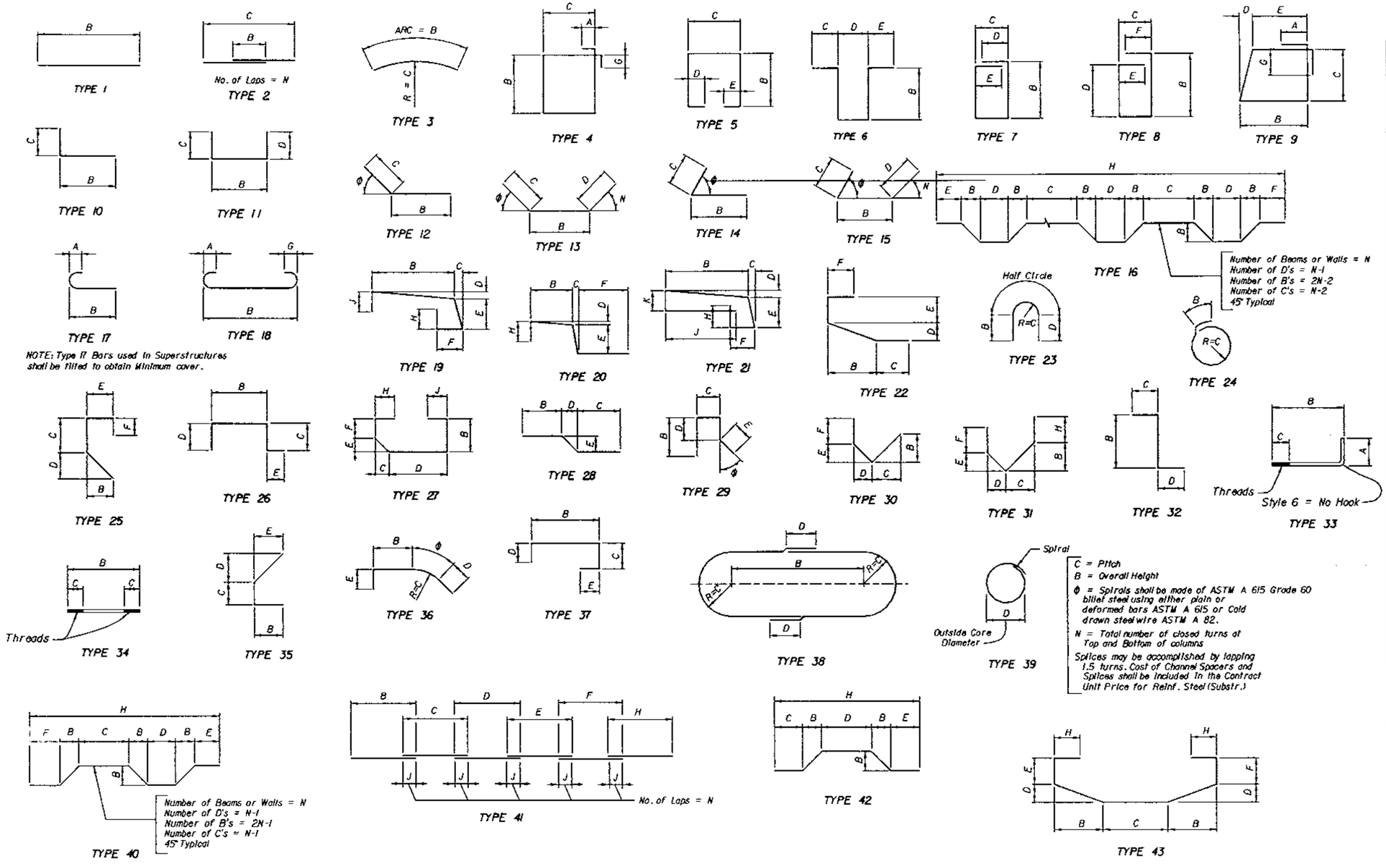

NOTE: For Bar Dimensions See REINFORCING BAR LIST Sheet.

HOOK DETAILS

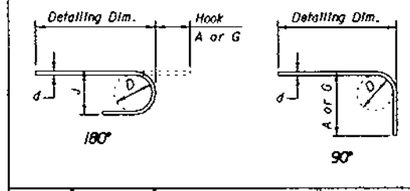

BAR SIZE	D	180° HOOKS		90° HOOKS
		A OR G	J	A OR G
#3	2¼"	5"	3"	6"
#4	3"	6"	4"	8"
#5	3¾"	7"	5"	10"
#6	4½"	8"	6"	1'-0"
#7	5¼"	10"	7"	1'-2"
#8	6"	11"	8"	1'-4"
#9	9½"	1'-3"	11¾"	1'-7"
#10	10¾"	1'-5"	1'-1¼"	1'-10"
#11	12"	1'-7"	1'-2¾"	2'-0"
#14	18¼"	2'-3"	1'-9¾"	2'-7"
#18	24"	3'-0"	2'-4½"	3'-5"
STYLE		1		3

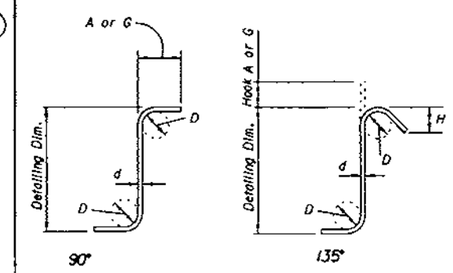

STIRRUPS
(TIES SIMILAR)

RECOMMENDED STIRRUP & TIE HOOK DIMENSIONS

BAR SIZE	D	90° HOOKS	135° HOOKS	
		HOOK A or G	HOOK A or G	APPROX. H
#3	1½"	4"	4"	2½"
#4	2"	4½"	4½"	3"
#5	2½"	6"	5½"	3¾"
#6	4½"	1'-0"	7¾"	4½"
#7	5¼"	1'-2"	9"	5¼"
#8	6"	1'-4"	10¼"	6"
STYLE		4	5	

STYLE 6 = NO HOOK

Hook Styles Detailed on this sheet are for Illustration Only.

Actual Hook Style for any particular bar will be shown under A or G Heading on REINFORCING BAR LIST sheet.

All Dimensions are out-to-out.

REVISIONS					
Date	By	Description	Date	By	Description
			94R		

	Names	Dates
Drawn by	JSP	11-93
Checked by	AJG	11-93
Designed by		
Checked by		
Approved by	AJG	

ENGINEER OF RECORD:
STRUCTURES DESIGN OFFICE
CENTRAL OFFICE
605 Suwannee Street, MS 33
Tallahassee, Florida 32399-0450

LOGO:

SEAL:

FLORIDA DEPARTMENT OF TRANSPORTATION
STRUCTURES DESIGN OFFICE

ROAD NO.	COUNTY	PROJECT NO.
SR 414	SEMINOLE	77002-3505

SHEET TITLE:
STANDARD BAR BENDING DETAILS

PROJECT NAME:
S.R. 414 OVER S.R. 434

Drawing No. 1 of 1

Index No. 1300

16 JAN 98 10:22:54

FED. ROAD DIV. NO.	STATE	PROJECT NO.	FISCAL YEAR	SHEET NO.
3	FLA.	—		B-7

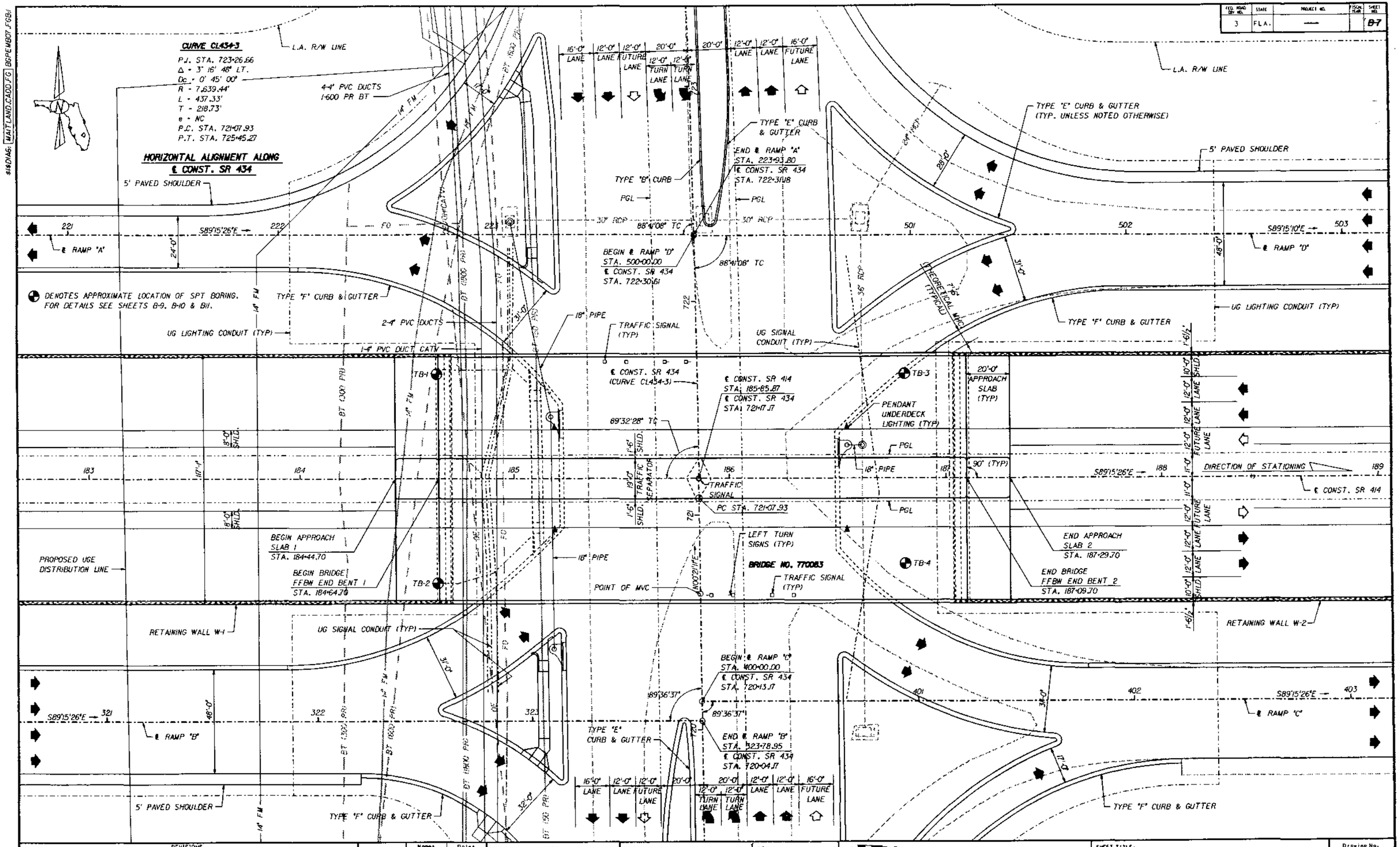

REVISIONS					
Date	By	Description	Date	By	Description

	Names	Dates
Drawn by	JLS	8/97
Checked by	MH	8/97
Designed by	MH	8/97
Checked by	MSE	8/97
Approved by	MARK S. EICHOLTZ	

ENGINEER OF RECORD:
URS Greiner, Inc.
P.O. BOX 31646, 7640 WEST
COURTNEY CAMPBELL CAUSEWAY
TAMPA, FLORIDA 33607-1462

LOGO: URS Greiner

SEAL: Mark S. Eicholtz 3/2/98

FLORIDA DEPARTMENT OF TRANSPORTATION
STRUCTURES DESIGN OFFICE

ROAD NO.	COUNTY	PROJECT NO.
SR 414	SEMINOLE	77002-3505

SHEET TITLE: PLAN - BRIDGE NO. 770083

PROJECT NAME: S.R. 414 OVER S.R. 434

Drawing No.

Index No.

PLOTTED: 27JAN98-13:21:40

FED. ROAD DIV. NO.	STATE	PROJECT NO.	FISCAL YEAR	SHEET NO.
3	FLA.	—		B-8

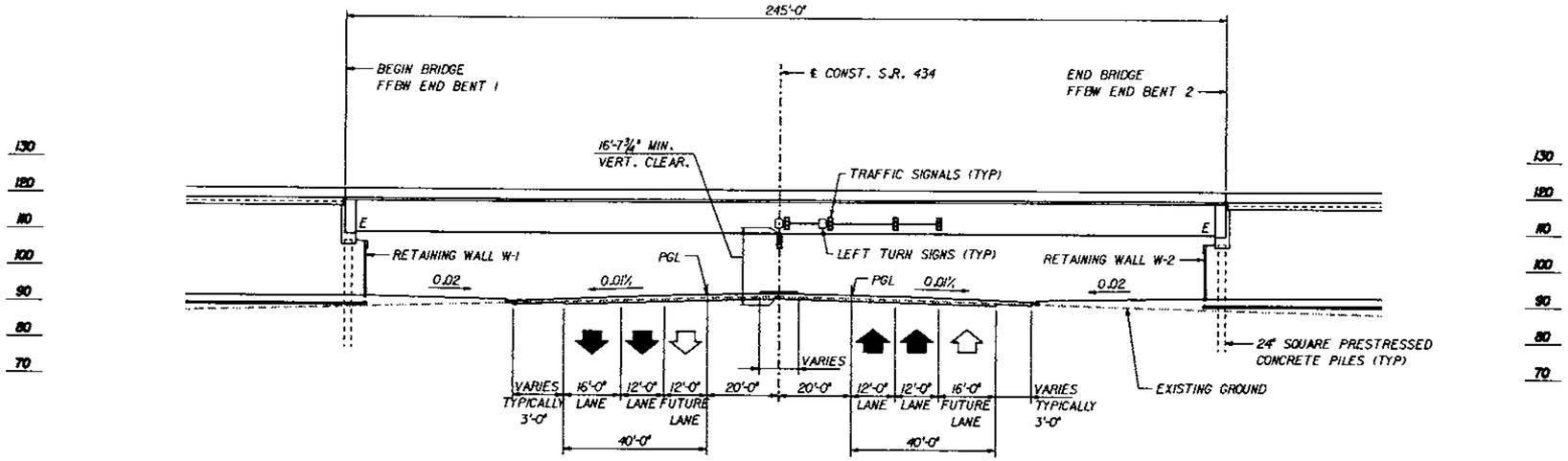

ELEVATION

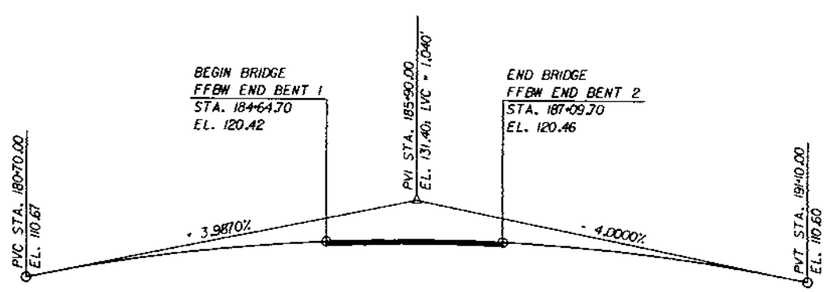

VERTICAL ALIGNMENT ALONG P.G.L. SR 414

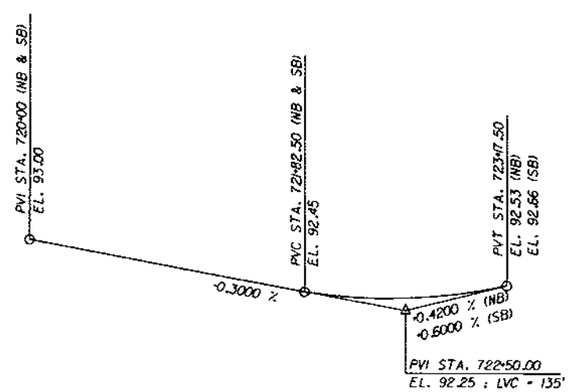

VERTICAL ALIGNMENT ALONG P.G.L. SR 434

TRAFFIC DATA

ROADWAY	ADT YEAR 2002	ADT YEAR 2022	DESIGN SPEED	% TRUCKS
S.R.414 (MAITLAND BLVD.)	50,600	68,700	45 MPH	3.0
S.R. 434 (FOREST CITY RD.)	54,100	73,400	45 MPH	3.0
K = 8.9%			D = 55.1%	

REVISIONS

Date	By	Description	Date	By	Description

	Names	Dates
Drawn by	KAC	8/97
Checked by	WH	8/97
Designed by	WH	8/97
Checked by	WSE	8/97
Approved by	MARK S. EICHOLTZ	

ENGINEER OF RECORD:
URS Greiner, Inc.
P.O. BOX 31646, 7650 WEST
COURTNEY CAMPBELL CAUSEWAY
TAMPA, FLORIDA 33607-1462

LOGO: URS Greiner

SEAL: Mark S. Eicholtz 3/2/98

FLORIDA DEPARTMENT OF TRANSPORTATION
STRUCTURES DESIGN OFFICE

ROAD NO.	COUNTY	PROJECT NO.
SR 414	SEMINOLE	77002-3505

SHEET TITLE: ELEVATION - BRIDGE NO. 770083

PROJECT NAME: S.R. 414 OVER S.R. 434

Drawing No.

Index No.

PLOTTED: 16JAN98-15:27:50

FROMMAIT

$IBCIAGL MAITLAND~4DD.FG 60PEMBOB.FGBI

FED. ROAD DIV. NO.	STATE	PROJECT NO.	FISCAL YEAR	SHEET NO.
	FLA.			B-9

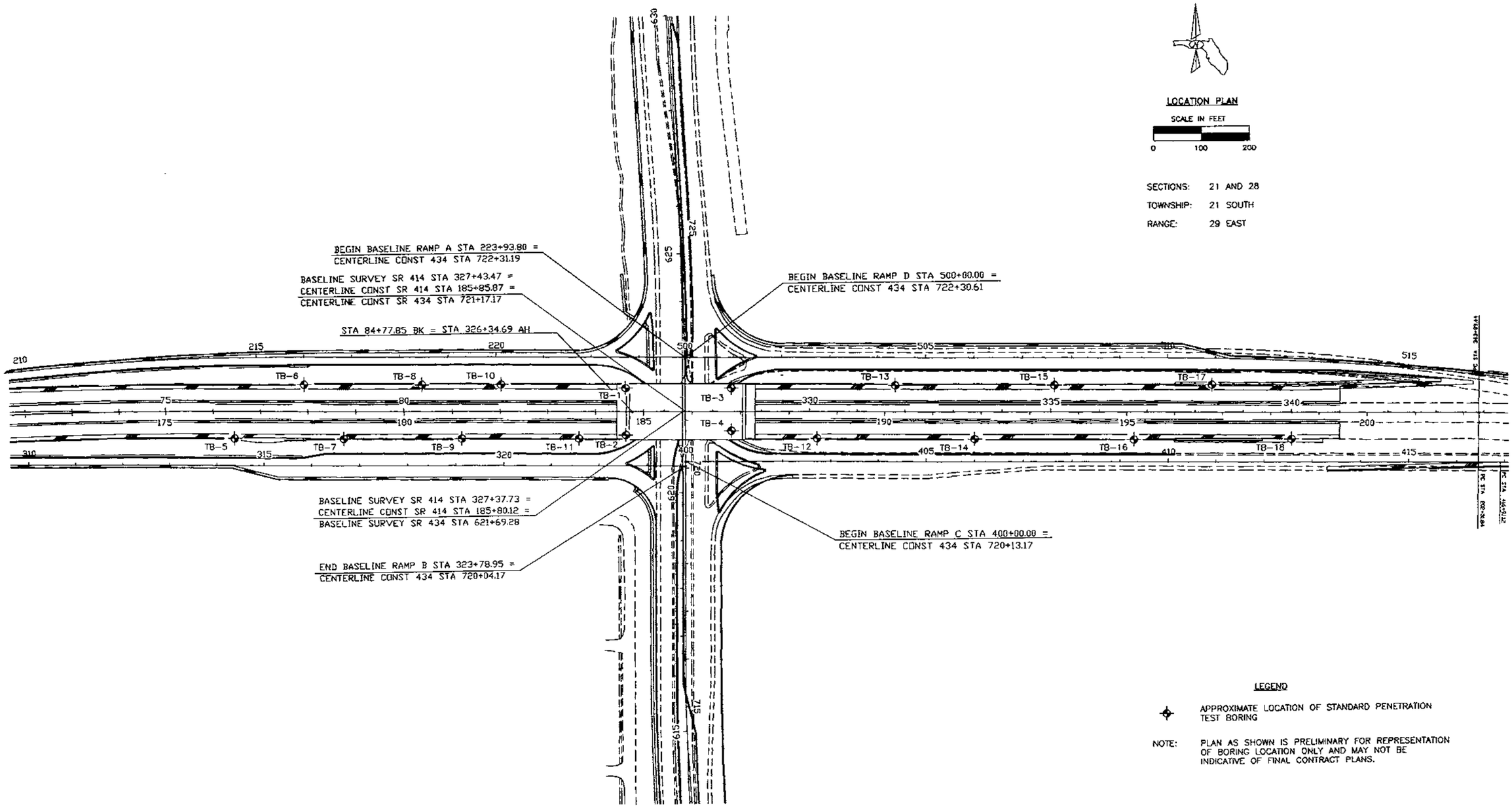

REVISIONS					
Date	By	Description	Date	By	Description

	Names	Dates
Drawn by	SW	1-15-98
Checked by	RA	1-15-98
Designed by	N/A	N/A
Checked by	N/A	N/A
Approved by	JAY W. CASPER, P.E.	

ENGINEER OF RECORD:
JAY W. CASPER, P.E. No. 36330
L.J. NODARSE & ASSOCIATES, INC.
1030 NORTH ORLANDO AVE.
WINTER PARK, FLORIDA

LOGO: Nodarse & Associates, Inc.

SEAL: 3/2/98

FLORIDA DEPARTMENT OF TRANSPORTATION
GEOTECHNICAL DESIGN OFFICE

ROAD NO.	COUNTY	PROJECT NO.
S.R. 414	SEMINOLE	77002-3505

SHEET TITLE: PLAN VIEW FOR SPT BORINGS

PROJECT NAME: S.R. 414 (MAITLAND BLVD.) INTERCHANGE AT S.R. 434
SEMINOLE COUNTY, FLORIDA

Drawing No.

Index No.

NODARSE AND ASSOC. No. 96G-0409 FIGURE: 3

FED. ROAD DIV. NO.	STATE	PROJECT NO.	FISCAL YEAR	SHEET NO.
	FLA.			8-10

BORING No. TB-1
STATION: 184+64, 49' LT.
ELEVATION: +91' NGVD

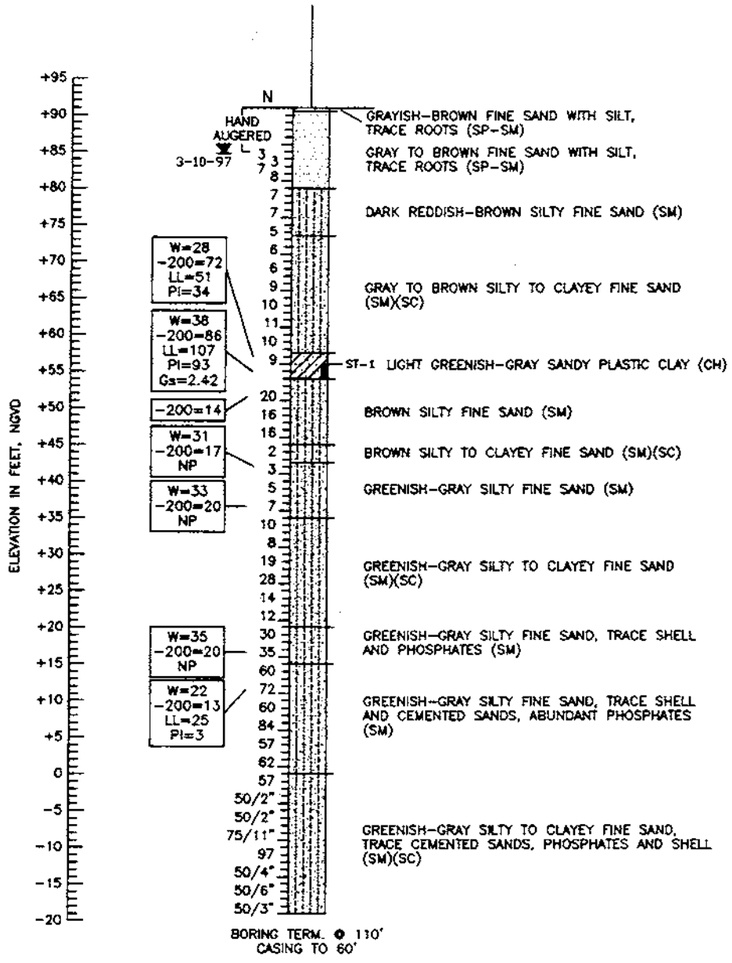

BORING TERM. @ 110'
CASING TO 60'

BORING No. TB-2
STATION: 184+64, 49' RT.
ELEVATION: +91.0' NGVD

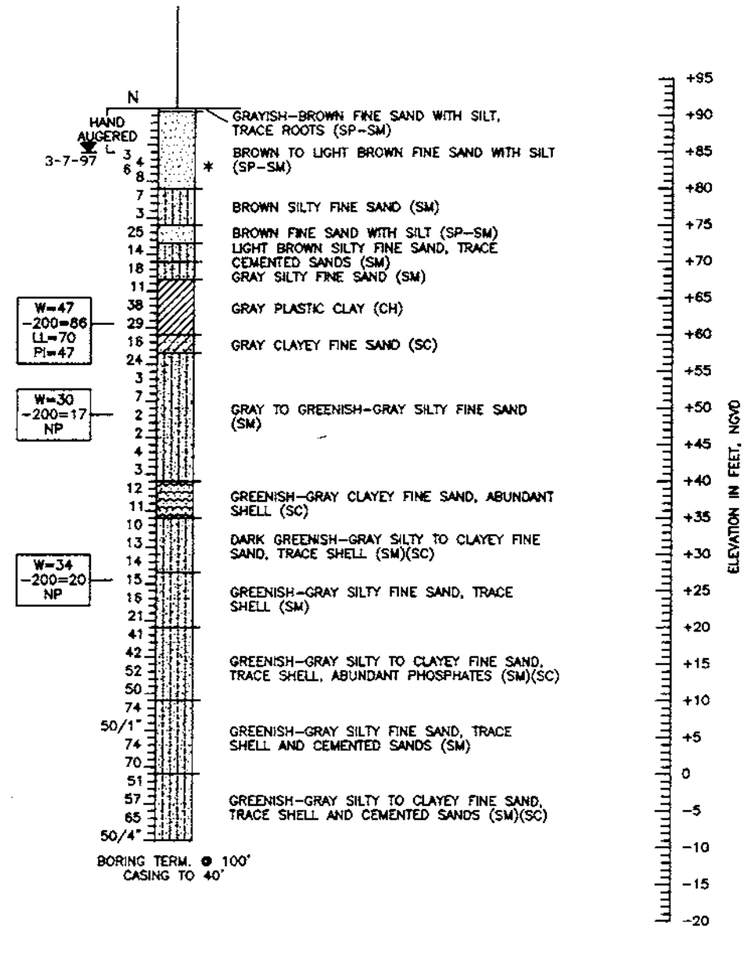

BORING TERM. @ 100'
CASING TO 40'

LEGEND

SAND
CLAYEY SAND
CLAY
SILTY SAND
SANDY CLAY
CLAYEY SAND, ABUNDANT SHELL

(SP) UNIFIED SOIL CLASSIFICATION GROUP SYMBOL

3-7-97 ENCOUNTERED GROUNDWATER LEVEL (DATE OF READING)

W=28 -200=72 LL=51 PI=34 Gs
NATURAL MOISTURE CONTENT (%)
FINES PASSING No. 200 SIEVE (%)
LIQUID LIMIT
PLASTICITY INDEX
NON-PLASTIC MATERIAL
SPECIFIC GRAVITY

ST-1 SHELBY TUBE SOIL SAMPLE

N STANDARD PENETRATION RESISTANCE IN BLOWS PER FOOT UNLESS OTHERWISE NOTED

50/2" NUMBER OF BLOWS REQUIRED (50) TO DRIVE SAMPLING SPOON (2) INCHES

STANDARD PENETRATION TEST DATA

SPOON INSIDE DIA.	1 3/8 IN.
SPOON OUTSIDE DIA.	2 IN.
ASTM STANDARD DROP SAFETY HAMMER (ROPE-CATHEAD)	
AVG. HAMMER DROP	30 IN.
HAMMER WEIGHT	140 LBS.

GRANULAR MATERIALS

RELATIVE DENSITY	SPT (BLOWS/FT.)
VERY LOOSE	LESS THAN 4
LOOSE	4-10
MEDIUM DENSE	10-30
DENSE	30-50
VERY DENSE	GREATER THAN 50

SILTS AND CLAYS

CONSISTENCY	SPT (BLOWS/FT.)
VERY SOFT	LESS THAN 2
SOFT	2-4
FIRM	4-8
STIFF	8-15
VERY STIFF	15-30
HARD	GREATER THAN 30

NOTES:

1) LAYER BOUNDARIES ARE APPROXIMATE AND MAY VARY BETWEEN OR AWAY FROM BORING LOCATIONS. SEE SECTION 120-3 OF THE STANDARD SPECIFICATIONS FOR MORE DETAILS.

2) BASED ON A REVIEW OF THE ST. JOHN'S RIVER WATER MANAGEMENT DISTRICT POTENTIOMETRIC MAPS OF THE UPPER FLORIDAN AQUIFER FOR THE PROJECT AREA, THE ESTIMATED ELEVATION OF THE ARTESIAN HEAD IS APPROXIMATELY +50 FEET, NGVD. THE CONTRACTOR SHALL BE PREPARED TO HANDLE ARTESIAN LEVELS UP TO ELEVATION +50 FEET, NGVD.

* STRONG FUEL ODOR ENCOUNTERED AT A DEPTH OF 8 FEET, OR APPROXIMATELY ELEVATION +83 FEET, NGVD IN BORING TB-2.

ENVIRONMENTAL CLASSIFICATION:

SUPERSTRUCTURE: SLIGHTLY AGGRESSIVE

SUBSTRUCTURE: STEEL: SLIGHTLY AGGRESSIVE
CONCRETE: SLIGHTLY AGGRESSIVE

REVISIONS					
Date	By	Description	Date	By	Description

	Names	Dates
Drawn by	SW	1-15-98
Checked by	RA	1-15-98
Designed by	N/A	N/A
Checked by	N/A	N/A
Approved by	JAY W. CASPER, P.E.	

ENGINEER OF RECORD:
JAY W. CASPER, P.E. No. 36330
L.J. NODARSE & ASSOCIATES, INC.
1030 NORTH ORLANDO AVE.
WINTER PARK, FLORIDA

LOGO: Nodarse & Associates, Inc.

SEAL: 3/2/98

FLORIDA DEPARTMENT OF TRANSPORTATION
GEOTECHNICAL DESIGN OFFICE

ROAD NO.	COUNTY	PROJECT NO.
S.R. 414	SEMINOLE	77002-3505

SHEET TITLE: REPORT OF SPT BORINGS FOR BRIDGE

PROJECT NAME: S.R. 414 (MAITLAND BLVD.) INTERCHANGE AT S.R. 434
SEMINOLE COUNTY, FLORIDA

Drawing No.

Index No.

NODARSE AND ASSOC. No. 960-0409 FIGURE: 4

FED. ROAD DIV. NO.	STATE	PROJECT NO.	FISCAL YEAR	SHEET NO.
	FLA.			B-11

BORING No. TB-3
STATION: 186+81, 49' LT.
ELEVATION: +90.5' NGVD

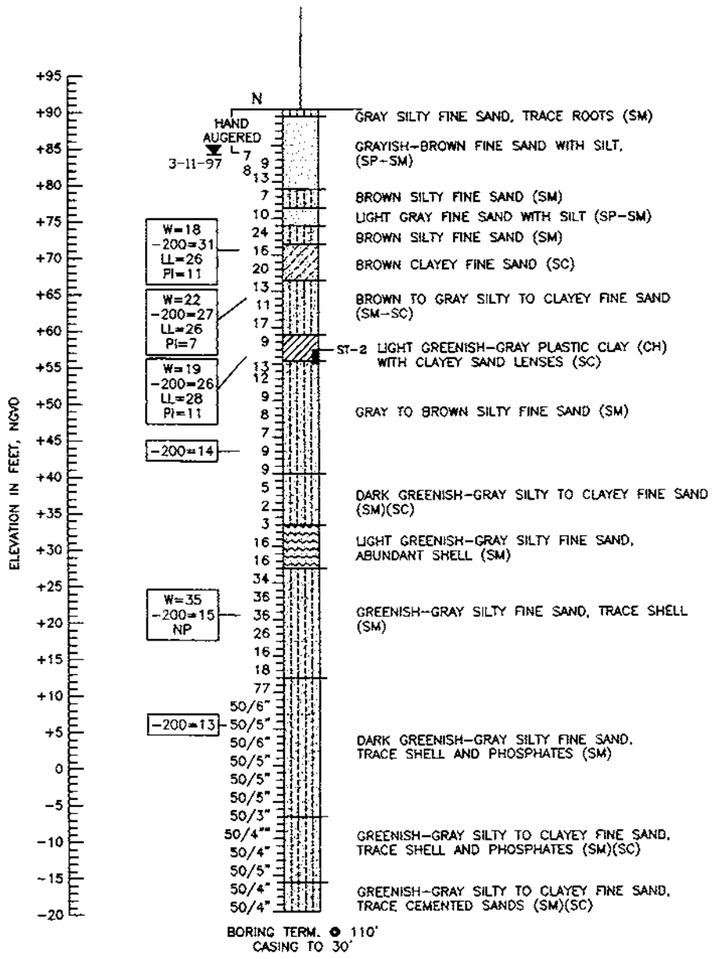

BORING TERM. @ 110'
CASING TO 30'

BORING No. TB-4
STATION: 186+81, 40' RT.
ELEVATION: +90.5' NGVD

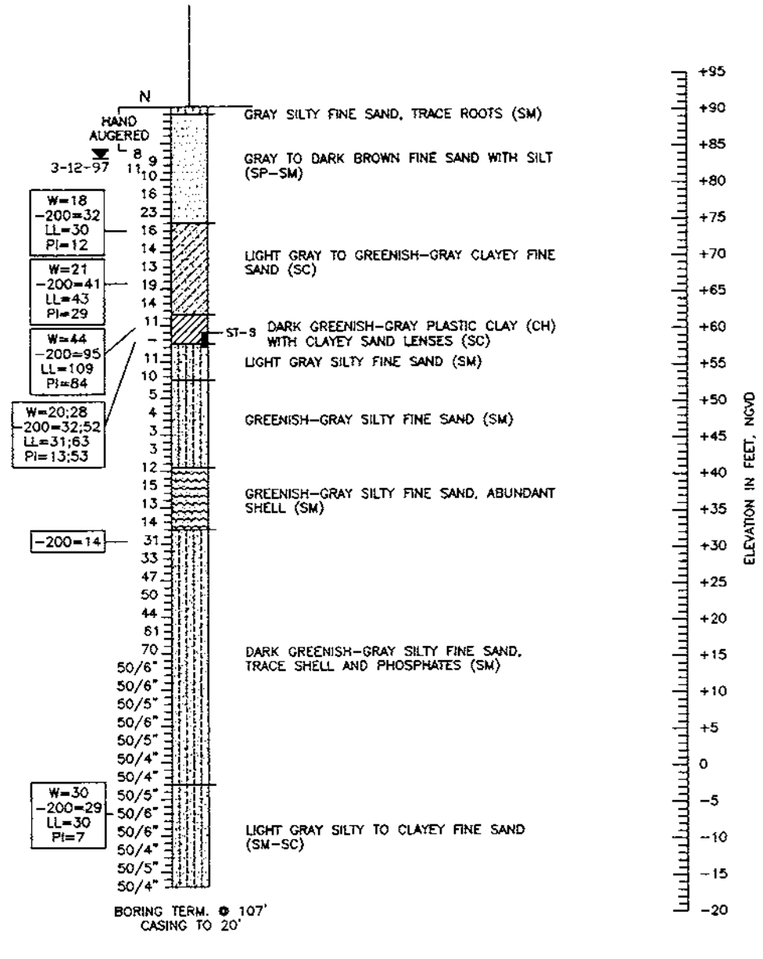

BORING TERM. @ 107'
CASING TO 20'

LEGEND

- SAND
- CLAYEY SAND
- CLAY
- SILTY SAND
- SILTY SAND ABUNDANT SHELL

(SP) UNIFIED SOIL CLASSIFICATION GROUP SYMBOL

3-11-97 ENCOUNTERED GROUNDWATER LEVEL (DATE OF READING)

W=18 -200=32 LL=30 PI=12 NP
- W=18 NATURAL MOISTURE CONTENT (%)
- -200=32 FINES PASSING No. 200 SIEVE (%)
- LL=30 LIQUID LIMIT
- PI=12 PLASTICITY INDEX
- NP NON-PLASTIC MATERIAL

ST-2 SHELBY TUBE SOIL SAMPLE

N STANDARD PENETRATION RESISTANCE IN BLOWS PER FOOT UNLESS OTHERWISE NOTED

50/6" NUMBER OF BLOWS REQUIRED (50) TO DRIVE SAMPLING SPOON (6) INCHES

STANDARD PENETRATION TEST DATA

SPOON INSIDE DIA.	1 3/8 IN.
SPOON OUTSIDE DIA.	2 IN.
ASTM STANDARD DROP SAFETY HAMMER (ROPE-CATHEAD)	
AVG. HAMMER DROP	30 IN.
HAMMER WEIGHT	140 LBS.

GRANULAR MATERIALS

RELATIVE DENSITY	SPT (BLOWS/FT.)
VERY LOOSE	LESS THAN 4
LOOSE	4-10
MEDIUM DENSE	10-30
DENSE	30-50
VERY DENSE	GREATER THAN 50

SILTS AND CLAYS

CONSISTENCY	SPT (BLOWS/FT.)
VERY SOFT	LESS THAN 2
SOFT	2-4
FIRM	4-8
STIFF	8-15
VERY STIFF	15-30
HARD	GREATER THAN 30

NOTES:

1) LAYER BOUNDARIES ARE APPROXIMATE AND MAY VARY BETWEEN OR AWAY FROM BORING LOCATIONS. SEE SECTION 120-3 OF THE STANDARD SPECIFICATIONS FOR MORE DETAILS.

2) BASED ON A REVIEW OF THE ST. JOHN'S RIVER WATER MANAGEMENT DISTRICT POTENTIOMETRIC MAPS OF THE UPPER FLORIDAN AQUIFER FOR THE PROJECT AREA, THE ESTIMATED ELEVATION OF THE ARTESIAN HEAD IS APPROXIMATELY +50 FEET, NGVD. THE CONTRACTOR SHALL BE PREPARED TO HANDLE ARTESIAN LEVELS UP TO ELEVATION +50 FEET, NGVD.

ENVIRONMENTAL CLASSIFICATION:

SUPERSTRUCTURE: SLIGHTLY AGGRESSIVE

SUBSTRUCTURE: STEEL: SLIGHTLY AGGRESSIVE
CONCRETE: SLIGHTLY AGGRESSIVE

REVISIONS

Date	By	Description	Date	By	Description

	Names	Dates
Drawn by	SW	1-15-98
Checked by	RA	1-15-98
Designed by	N/A	N/A
Checked by	N/A	N/A
Approved by	JAY W. CASPER, P.E.	

ENGINEER OF RECORD:
JAY W. CASPER, P.E. No. 36330
L.J. NODARSE & ASSOCIATES, INC.
1030 NORTH ORLANDO AVE.
WINTER PARK, FLORIDA

LOGO: Nodarse & Associates, Inc.

SEAL: 3/2/98

FLORIDA DEPARTMENT OF TRANSPORTATION
GEOTECHNICAL DESIGN OFFICE

ROAD NO.	COUNTY	PROJECT NO.
S.R. 414	SEMINOLE	77002-3505

SHEET TITLE: REPORT OF SPT BORINGS FOR BRIDGE

PROJECT NAME: S.R. 414 (MAITLAND BLVD.) INTERCHANGE AT S.R. 434
SEMINOLE COUNTY, FLORIDA

Drawing No.

Index No.

NODARSE AND ASSOC. No. 960-0409 FIGURE: 5

NOTES

1. PILES SHALL BE INSTALLED IN ACCORDANCE WITH SECTION A455 OF THE SPECIFICATIONS.

2. LEGEND:
   - ☐ DENOTES PLUMB PILE
   - ■ DENOTES TEST PILE

3. PILE SPACINGS SHOWN ARE MEASURED ALONG FFBW AT BOTTOM OF END BENT CAP.

4. CONTRACTOR IS TO VERIFY LOCATION OF ALL UTILITIES PRIOR TO ANY PILE DRIVING. THE EXISTING 14" FM AND OE/OH(CATV) UTILITIES ARE TO BE RELOCATED BEFORE COMMENCEMENT OF PILE DRIVING.

5. PILE INSTALLATION TABLE

PILE DATA TABLE

INSTALLATION CRITERIA							
PIER OR BENT	PILE SIZE (IN)	ULTIMATE BEARING CAPACITY (TONS)	TENSION CAPACITY (TONS)	MIN. TIP ELEV. (FT)	TEST PILE LENGTH (FT)	REQ'D JET ELEV. (FT)	REQ'D PREFORM & BITUMEN ELEV. (FT)
1	24	420	N/A	-45	130	N/A	-60
2	24	420	N/A	-45	130	N/A	-60

DESIGN CRITERIA						
FACTORED DESIGN LOAD (TONS)	DOWN DRAG (TONS)	TOTAL SCOUR RESIST. (TONS)	NET SCOUR RESIST. (TONS)	LONG TERM SCOUR ELEV. (FT)	100 YR. SCOUR ELEV. (FT)	●
276	18	N/A	N/A	N/A	N/A	0.7
276	18	N/A	N/A	N/A	N/A	0.7

ULTIMATE BEARING CAPACITY = $\frac{\text{FACTORED DESIGN LOAD + NET SCOUR + DOWNDRAG}}{●}$

THE REQUIRED DRIVING RESISTANCE (RDR) EQUALS THE ULTIMATE BEARING CAPACITY.

● IS BASED ON THE USE OF DYNAMIC LOAD TESTS.

6. DRIVE ONE 24" SQUARE PRESTRESSED CONCRETE TEST PILE IN THE POSITION OF A PERMANENT PILE LOCATED AT END BENTS 1 & 2, PILE LOCATION NO. 7, OR AS DIRECTED BY THE ENGINEER. A DYNAMIC LOAD TEST SHALL BE PERFORMED ON ALL TEST PILES AS PER SECTION A455-3.14 OF SPECIFICATION A455. DYNAMIC LOAD TEST SHALL BE INCLUDED IN THE CONTRACT UNIT PRICE FOR BID ITEM 455-137 (DYNAMIC TEST LOAD).

7. THE MINIMUM TIP ELEVATION IS REQUIRED TO MINIMIZE STRUCTURE SETTLEMENT.

8. DOWN DRAG CRITERIA IS BASED ON THE USE OF OVERSIZED PREFORMED PILE HOLES AND BITUMEN COATING ON THE PILES TO THE ELEVATION SHOWN IN THE PILE DATA TABLE. THE ENGINEER MAY VARY THE LENGTH OF THE BITUMEN COATING BASED UPON THE RESULTS OF THE TEST PILE. PRIOR TO CONSTRUCTION OF THE PROPRIETARY RETAINING WALL SYSTEM, THE PORTION OF THE END BENT PILES EXPOSED ABOVE EXISTING GROUND SHALL ALSO BE COATED WITH BITUMEN. THE BITUMEN COATING SHALL BE FURNISHED AND INSTALLED IN ACCORDANCE WITH SPECIFICATION 459.

9. THE OVERSIZED PREFORMED HOLE SHALL BE A MINIMUM AUGER/DRILL DIAMETER OF 36 INCHES. THE CONTRACTOR SHALL USE SPECIAL EQUIPMENT AND/OR METHODS (i.e. CORE BARRELS, ROCK AUGERS, DRILL BITS, ETC.) AS NEEDED TO FACILITATE PREFORMING. A PUNCH OR CHISEL MAY BE USED TO PENETRATE HARD LAYERS IN COMBINATION WITH THE AUGER /DRILL. HOWEVER, A PUNCH OR CHISEL MAY NOT BE SUBSTITUTED IN PLACE OF THE AUGER/DRILL.

10. PILES SHALL BE DRIVEN PRIOR TO THE CONSTRUCTION OF THE PROPRIETARY RETAINING WALL SYSTEM.

11. FOR BORING LOCATIONS AND BORING DATA, SEE SHEETS B-9 THRU B-11.

PILE CUTOFF ELEVATIONS

PILE NO.	1	2	3	4	5	6	7	8	9	10	11	12	13
END BENT 1	106.2	106.4	106.5	106.7	106.9	107.1	107.3	107.1	106.9	106.7	106.5	106.4	106.2
END BENT 2	106.2	106.4	106.6	106.8	106.9	107.1	107.3	107.1	106.9	106.8	106.6	106.4	106.2

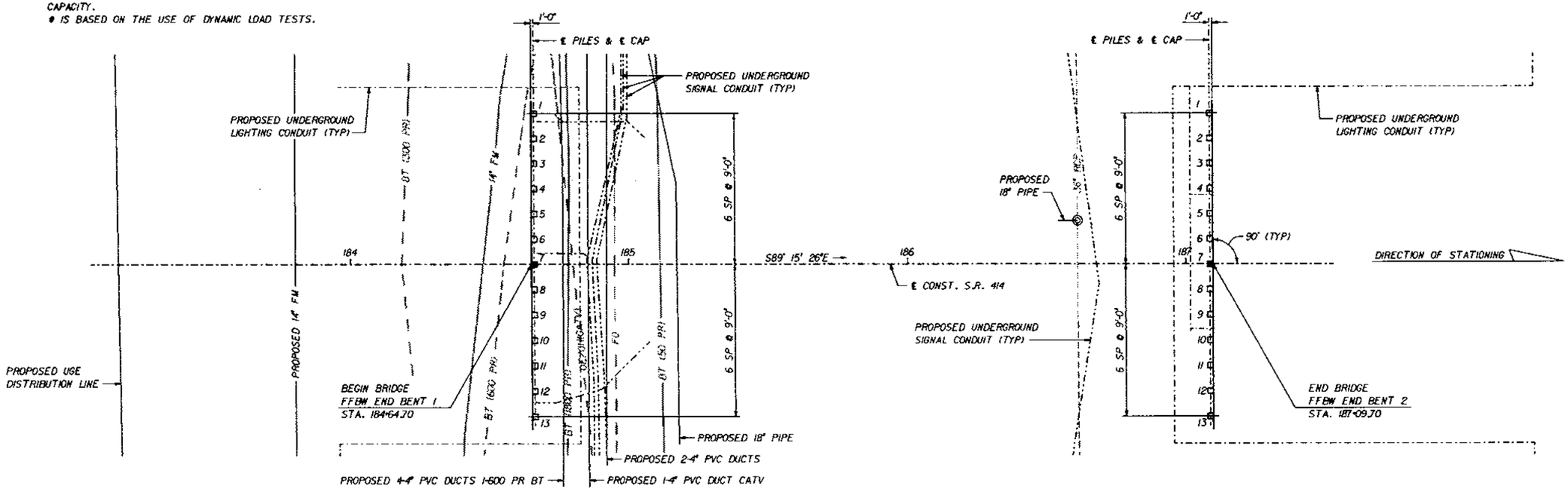

PLAN

REVISIONS					
Date	By	Description	Date	By	Description

	Name	Date
Drawn by	DCW	8/97
Checked by	MH	8/97
Designed by	MH	8/97
Checked by	MSE	8/97
Approved by	MARK S. EICHOLTZ	

ENGINEER OF RECORD:
URS Greiner, Inc.
P.O. BOX 31646, 7650 WEST COURTNEY CAMPBELL CAUSEWAY
TAMPA, FLORIDA 33607-1462

LOGO: URS Greiner

SEAL: Mark S. Eicholtz 3/2/98

FLORIDA DEPARTMENT OF TRANSPORTATION
STRUCTURES DESIGN OFFICE

ROAD NO.	COUNTY	PROJECT NO.
SR 414	SEMINOLE	77002-3505

SHEET TITLE: FOUNDATION LAYOUT

PROJECT NAME: S.R. 414 OVER S.R. 434

Drawing No.

Index No.

$IDIAG: WAITLAN 10,FG BFNOMBO1.FGBJ
FRA94401T
PLOTTED: 27JAN98-13:50:40

FED. ROAD DIV. NO.	STATE	PROJECT NO.	FISCAL YEAR	SHEET NO.
3	FLA.	—		B-13

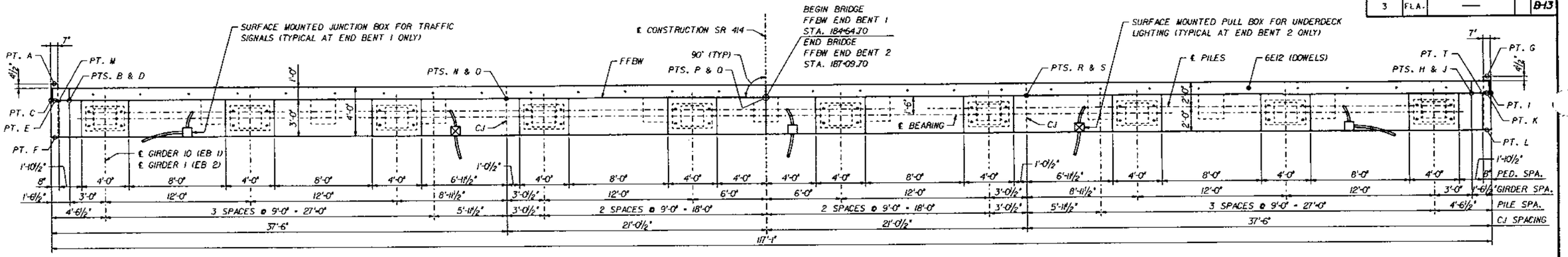

PLAN

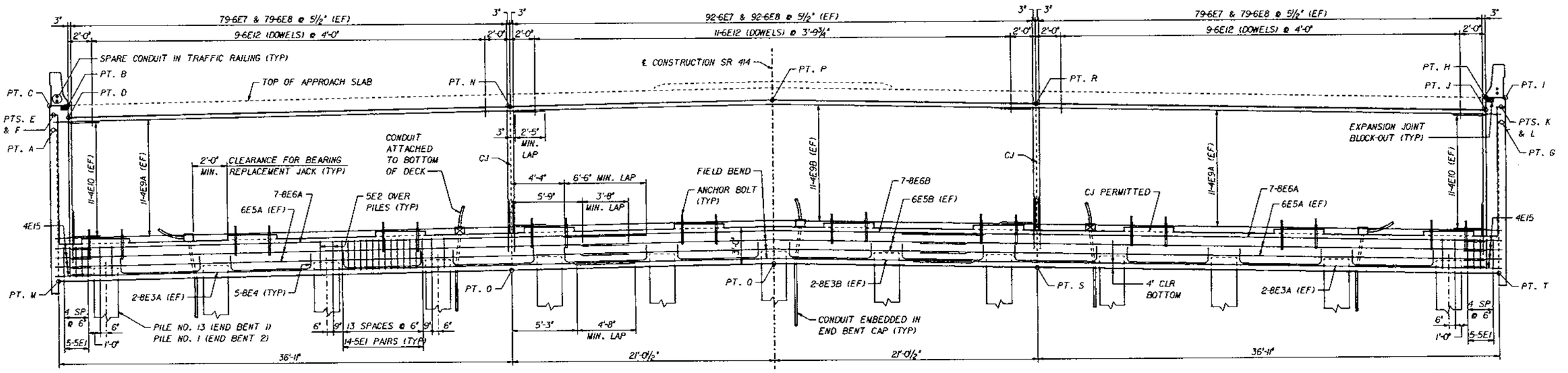

ELEVATION

NOTES

1. ALL REINFORCING STEEL SHALL HAVE 3" CLEAR COVER, UNLESS NOTED OTHERWISE.
2. FOR DETAILS OF SPARE CONDUIT IN TRAFFIC RAILING SEE SHEET B-25.
3. FOR ANCHOR BOLT DETAILS AND SETTING REQUIREMENTS SEE SHEET B-26.
4. FOR DETAILS OF EXPANSION JOINT BLOCKOUT SEE SHEET B-27.
5. FOR DETAILS OF UNDERDECK LIGHTING, SEE ROADWAY LIGHTING PLANS AND RETAINING WALL PLANS.
6. FOR DETAILS OF TRAFFIC SIGNALS, SEE SIGNALIZATION PLANS AND RETAINING WALL PLANS.

WORK THIS SHEET WITH SHEET B-14.

BEARING PEDESTAL POINT ELEVATIONS

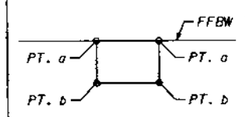

GIRDER	END BENT 1 PT. a	END BENT 1 PT. b	END BENT 2 PT. a	END BENT 2 PT. b
1	108.638	108.666	108.675	108.702
2	108.878	108.906	108.915	108.942
3	109.118	109.146	109.155	109.182
4	109.358	109.386	109.395	109.422
5	109.598	109.626	109.635	109.662
6	109.598	109.626	109.635	109.662
7	109.358	109.386	109.395	109.422
8	109.118	109.146	109.155	109.182
9	108.878	108.906	108.915	108.942
10	108.638	108.666	108.675	108.702

FINISH GRADE ELEVATIONS

ELEVATION	PT. A	PT. B	PT. C	PT. D	PT. E	PT. F	PT. G	PT. H	PT. I	PT. J	PT. K	PT. L	PT. M	PT. N	PT. O	PT. P	PT. Q	PT. R	PT. S	PT. T
END BENT 1	117.388	119.502	119.471	118.502	118.675	118.703	117.388	119.502	119.471	118.502	118.675	118.703	105.102	119.221	105.840	119.642	106.261	119.221	105.840	105.102
END BENT 2	117.425	119.539	119.508	118.539	118.712	118.685	117.425	119.539	119.508	118.539	118.712	118.685	105.139	119.258	105.877	119.679	106.298	119.258	105.877	105.139

REVISIONS					
Date	By	Description	Date	By	Description

	Names	Dates
Drawn by	JB	8/97
Checked by	MH	10/97
Designed by	MH	10/97
Checked by	ADS	10/97
Approved by	MARK S. EICHOLTZ	

ENGINEER OF RECORD:
URS Greiner, Inc.
P.O. BOX 31646, 7440 WEST
COURTNEY CAMPBELL CAUSEWAY
TAMPA, FLORIDA 33607-1462

LOGO: URS Greiner

SEAL: Mark S. Eicholtz 3/2/98

FLORIDA DEPARTMENT OF TRANSPORTATION
STRUCTURES DESIGN OFFICE

ROAD NO.	COUNTY	PROJECT NO.
SR 414	SEMINOLE	77002-3505

SHEET TITLE: END BENTS 1 AND 2

PROJECT NAME: S.R. 414 OVER S.R. 434

Drawing No.

Index No.

PLOTTED: 27-JAN-98-14:01:00

FRAM941T

$$$DIAG: MAITLAND.CADD.FG BABTM801.FGB

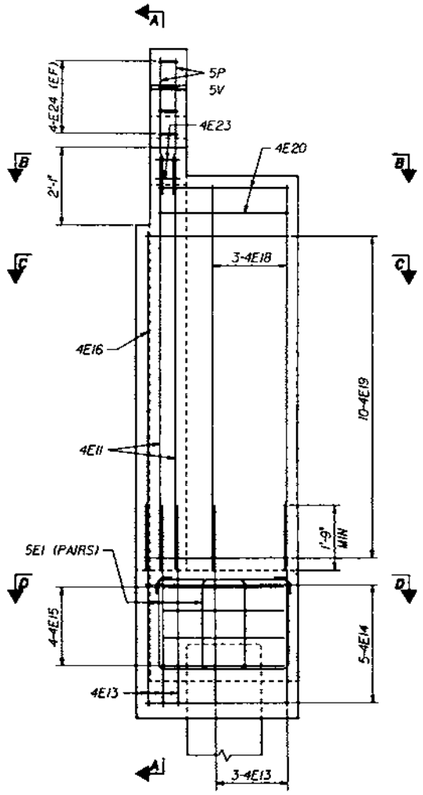

TYPICAL END ELEVATION

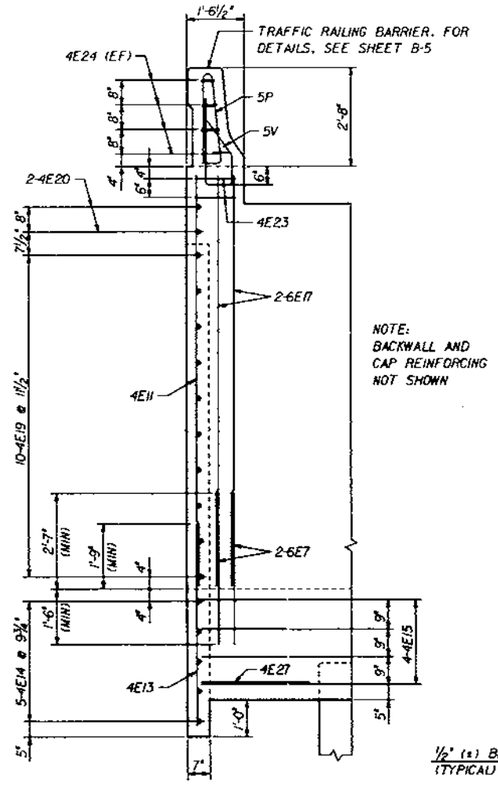

NOTE:
BACKWALL AND CAP REINFORCING NOT SHOWN

SECTION A-A

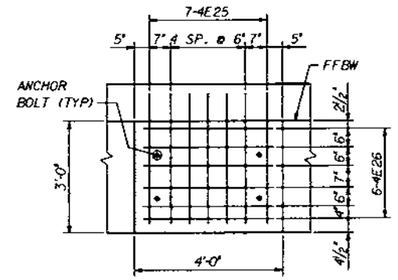

PLAN - PEDESTAL REINFORCING

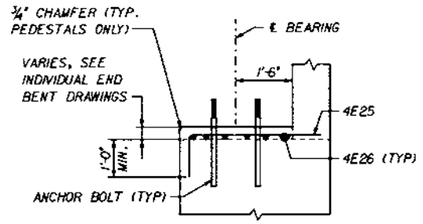

TYPICAL SECTION THRU PEDESTAL

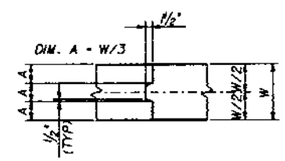

KEYED CONSTRUCTION JOINT DETAIL (2)

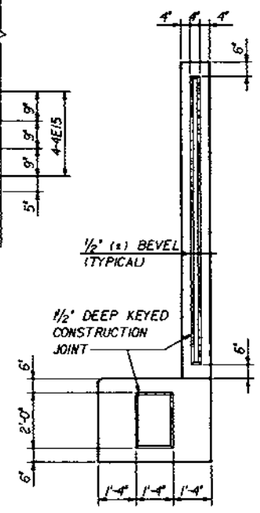

KEYED CONSTRUCTION JOINT DETAIL (1)

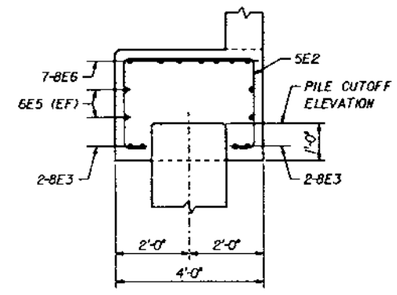

SECTION AT PILE

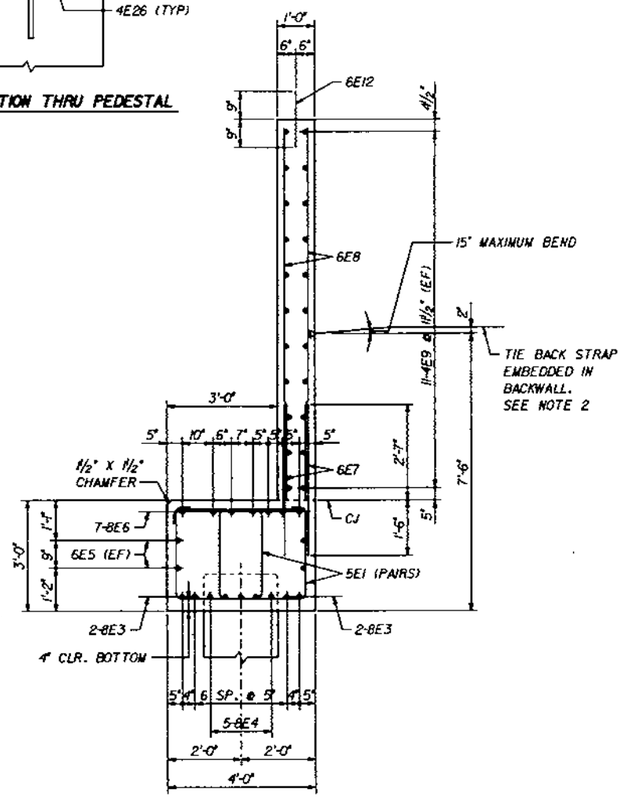

TYPICAL SECTION

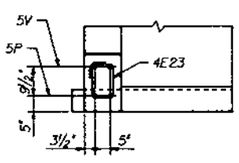

SECTION B-B

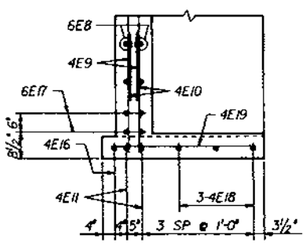

SECTION C-C

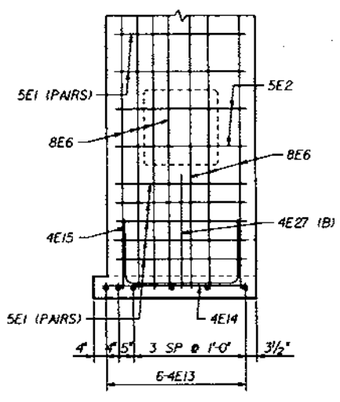

SECTION D-D

ESTIMATED QUANTITIES

ITEM		UNIT	QUANTITY END BENT 1	QUANTITY END BENT 2
CLASS II CONCRETE (SUBSTRUCTURE)	PEDESTALS	CU. YD.	2.09	2.09
	CAP		48.74	48.74
	WALLS		49.83	49.83
	TOTAL		100.66	100.66
REINFORCING STEEL (SUBSTRUCTURE)		LBS.	23,581	23,581
PRESTRESSED CONCRETE PILES (24" SQUARE)		LIN. FT.	SEE SUMMARY OF BRIDGE PAY ITEMS	

NOTES

1. ALL REINFORCING STEEL SHALL HAVE 3" CLEAR COVER, UNLESS NOTED OTHERWISE.
2. SOIL REINFORCING STRAPS AND INSERTS ARE TO RESIST A LATERAL FORCE OF 7.3 KIPS PER FOOT OF BACKWALL (LOAD FACTORED). IF MULTIPLE LAYERS OF STRAPS ARE USED TO SATISFY THE LATERAL FORCE REQUIREMENTS, THE CENTROID OF THE STRAPS SHALL BE AT THE LOCATION SHOWN ABOVE FOR A SINGLE LAYER OF STRAPS. FOR ADDITIONAL REQUIREMENTS SEE SHEETS W-1 AND W-2.
3. 4E24 BARS SHALL BE FIELD CUT WHEN REQUIRED.
4. BARS 5V AND 5P ARE INCLUDED IN THE COST FOR REINFORCING STEEL (SUBSTRUCTURE).

WORK THIS SHEET WITH SHEET B-13

FED. ROAD DIV. NO.	STATE	PROJECT NO.	FISCAL YEAR	SHEET NO.
3	FLA.	—		B45

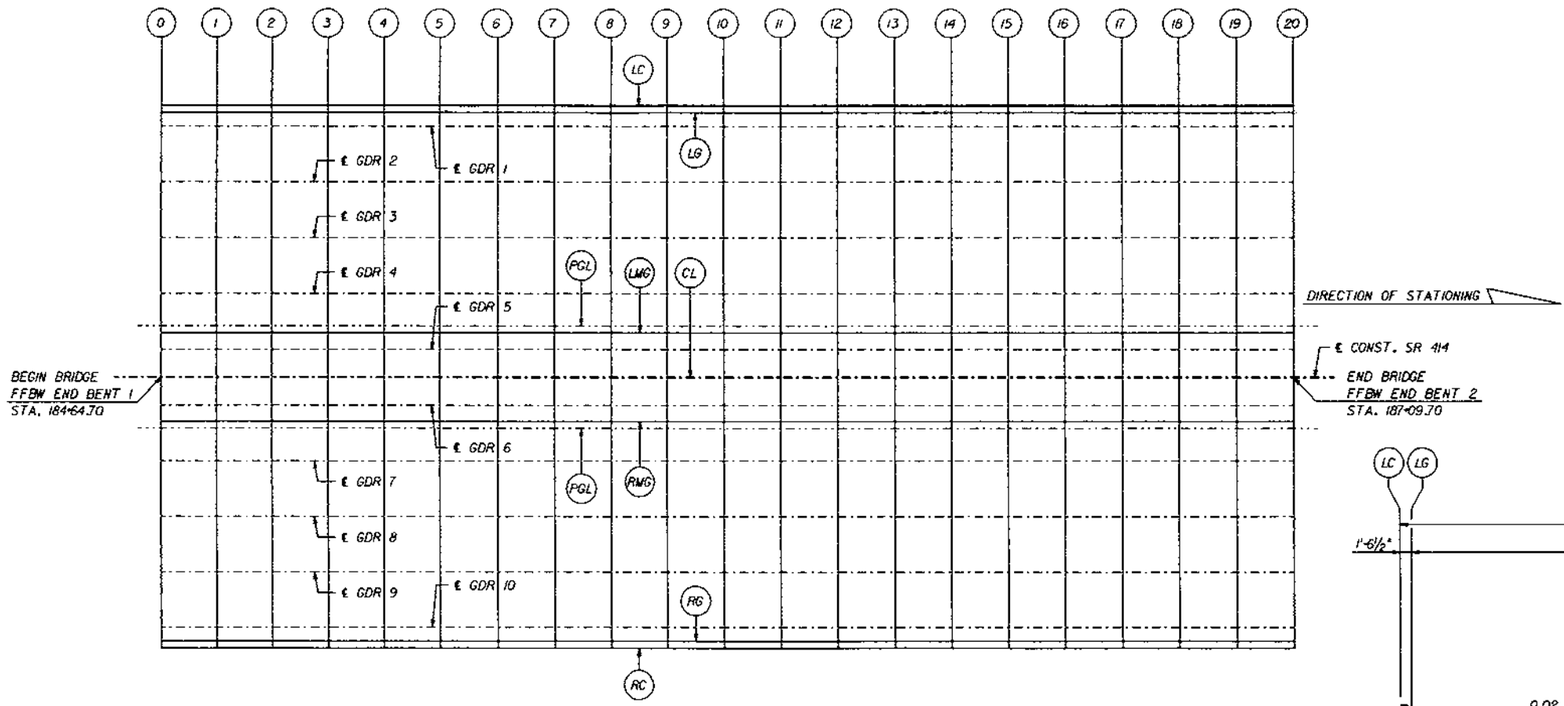

PLAN

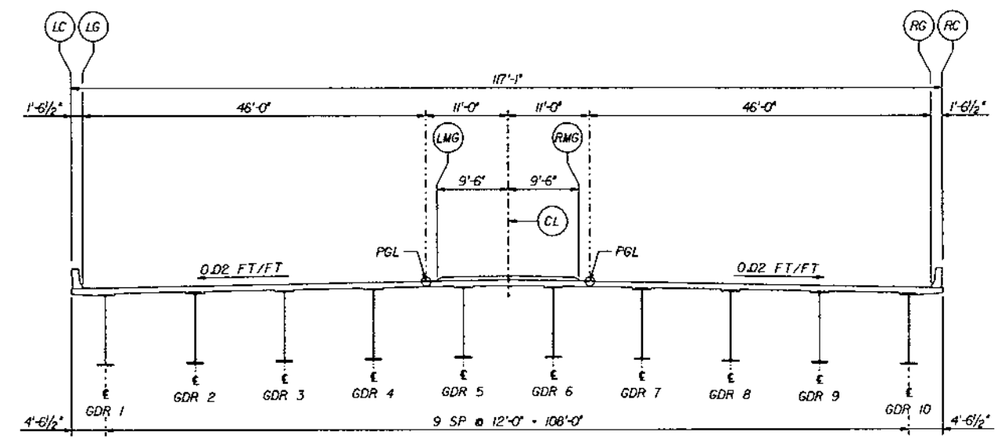

TYPICAL SECTION THRU SPAN

SPAN 1

SPAN 1	INCR. DIST.	FINISHED GRADE ELEVATIONS AT POINTS																				
		0	1	2	3	4	5	6	7	8	9	10	11	12	13	14	15	16	17	18	19	20
GDR 1	12.100	119.576	119.685	119.782	119.869	119.943	120.007	120.060	120.101	120.131	120.149	120.157	120.153	120.138	120.112	120.074	120.025	119.965	119.894	119.811	119.718	119.613
GDR 2	12.100	119.816	119.925	120.022	120.109	120.183	120.247	120.300	120.341	120.371	120.389	120.397	120.393	120.378	120.352	120.314	120.265	120.205	120.134	120.051	119.958	119.853
GDR 3	12.100	120.056	120.165	120.262	120.349	120.423	120.487	120.540	120.581	120.611	120.629	120.637	120.633	120.618	120.592	120.554	120.505	120.445	120.374	120.291	120.198	120.093
GDR 4	12.100	120.296	120.405	120.502	120.589	120.663	120.727	120.780	120.821	120.851	120.869	120.877	120.873	120.858	120.832	120.794	120.745	120.685	120.614	120.531	120.438	120.333
GDR 5	12.100	120.536	120.645	120.742	120.829	120.903	120.967	121.020	121.061	121.091	121.109	121.117	121.113	121.098	121.072	121.034	120.985	120.925	120.854	120.771	120.678	120.573
GDR 6	12.100	120.536	120.645	120.742	120.829	120.903	120.967	121.020	121.061	121.091	121.109	121.117	121.113	121.098	121.072	121.034	120.985	120.925	120.854	120.771	120.678	120.573
GDR 7	12.100	120.296	120.405	120.502	120.589	120.663	120.727	120.780	120.821	120.851	120.869	120.877	120.873	120.858	120.832	120.794	120.745	120.685	120.614	120.531	120.438	120.333
GDR 8	12.100	120.056	120.165	120.262	120.349	120.423	120.487	120.540	120.581	120.611	120.629	120.637	120.633	120.618	120.592	120.554	120.505	120.445	120.374	120.291	120.198	120.093
GDR 9	12.100	119.816	119.925	120.022	120.109	120.183	120.247	120.300	120.341	120.371	120.389	120.397	120.393	120.378	120.352	120.314	120.265	120.205	120.134	120.051	119.958	119.853
GDR 10	12.100	119.576	119.685	119.782	119.869	119.943	120.007	120.060	120.101	120.131	120.149	120.157	120.153	120.138	120.112	120.074	120.025	119.965	119.894	119.811	119.718	119.613
LC	12.250	119.471	119.583	119.682	119.771	119.847	119.913	119.966	120.009	120.039	120.058	120.066	120.062	120.047	120.020	119.981	119.931	119.870	119.796	119.712	119.616	119.508
LG	12.250	119.502	119.613	119.713	119.802	119.878	119.944	119.997	120.039	120.070	120.089	120.097	120.093	120.077	120.050	120.012	119.962	119.900	119.827	119.743	119.647	119.539
PGL	12.250	120.422	120.533	120.633	120.722	120.798	120.864	120.917	120.959	120.990	121.009	121.017	121.013	120.997	120.970	120.932	120.882	120.820	120.747	120.663	120.567	120.459
LMG	12.250	120.452	120.563	120.663	120.752	120.828	120.894	120.947	120.989	121.020	121.039	121.047	121.043	121.027	121.000	120.962	120.912	120.850	120.777	120.693	120.597	120.489
CL	12.250	120.642	120.753	120.853	120.942	121.018	121.084	121.137	121.179	121.210	121.229	121.237	121.233	121.217	121.190	121.152	121.102	121.040	120.967	120.883	120.787	120.679
RMG	12.250	120.452	120.563	120.663	120.752	120.828	120.894	120.947	120.989	121.020	121.039	121.047	121.043	121.027	121.000	120.962	120.912	120.850	120.777	120.693	120.597	120.489
PGL	12.250	120.422	120.533	120.633	120.722	120.798	120.864	120.917	120.959	120.990	121.009	121.017	121.013	120.997	120.970	120.932	120.882	120.820	120.747	120.663	120.567	120.459
RG	12.250	119.502	119.613	119.713	119.802	119.878	119.944	119.997	120.039	120.070	120.089	120.097	120.093	120.077	120.050	120.012	119.962	119.900	119.827	119.743	119.647	119.539
RC	12.250	119.471	119.583	119.682	119.771	119.847	119.913	119.966	120.009	120.039	120.058	120.066	120.062	120.047	120.020	119.981	119.931	119.870	119.796	119.712	119.616	119.508

NOTES

LC - DENOTES LEFT COPING
LG - DENOTES LEFT GUTTER
LMG - DENOTES LEFT MEDIAN GUTTER
PGL - DENOTES PROFILE GRADE
CL - DENOTES ℄ CONST. S.R. 414
RMG - DENOTES RIGHT MEDIAN GUTTER
RG - DENOTES RIGHT GUTTER
RC - DENOTES RIGHT COPING

INCR. DIST.: THE DISTANCE ALONG COPING LINES, GUTTER LINES, PROFILE GRADE LINE AND GIRDER CENTERLINES BETWEEN POINTS.

POINTS: POINT '0' IS LOCATED AT ℄ BEARING FOR GIRDERS AND FFBW FOR OTHERS AT THE BEGINNING OF THE SPAN AND THE LAST POINT IS AT ℄ BEARING FOR GIRDERS AND FFBW FOR OTHERS AT THE END OF THE SPAN.

ELEVATIONS: ELEVATIONS GIVEN ARE TOP OF SLAB ELEVATIONS AT COPING LINES, GUTTER LINES, PROFILE GRADE LINE AND OVER GIRDER CENTERLINES.

REVISIONS

Date	By	Description	Date	By	Description

	Names	Dates
Drawn by	DCW	10/97
Checked by	MH	10/97
Designed by	MSE	10/97
Checked by	ADS	10/97
Approved by	MARK S. EICHOLTZ	

ENGINEER OF RECORD:
URS Greiner, Inc.
P.O. BOX 31646, 7660 WEST
COURTNEY CAMPBELL CAUSEWAY
TAMPA, FLORIDA 33607-1462

LOGO: URS Greiner

SEAL: Mark S. Eicholtz 3/2/98

FLORIDA DEPARTMENT OF TRANSPORTATION
STRUCTURES DESIGN OFFICE

ROAD NO.	COUNTY	PROJECT NO.
SR 414	SEMINOLE	77002-3505

SHEET TITLE: FINISH GRADE ELEVATIONS

PROJECT NAME: S.R. 414 OVER S.R. 434

Drawing No.

Index No.

$19DIAG: MAITLAND.CADD.FG BOKEMBOY.FGB

FRAMMAT

PLOTTED: 23DEC97-15:25:50

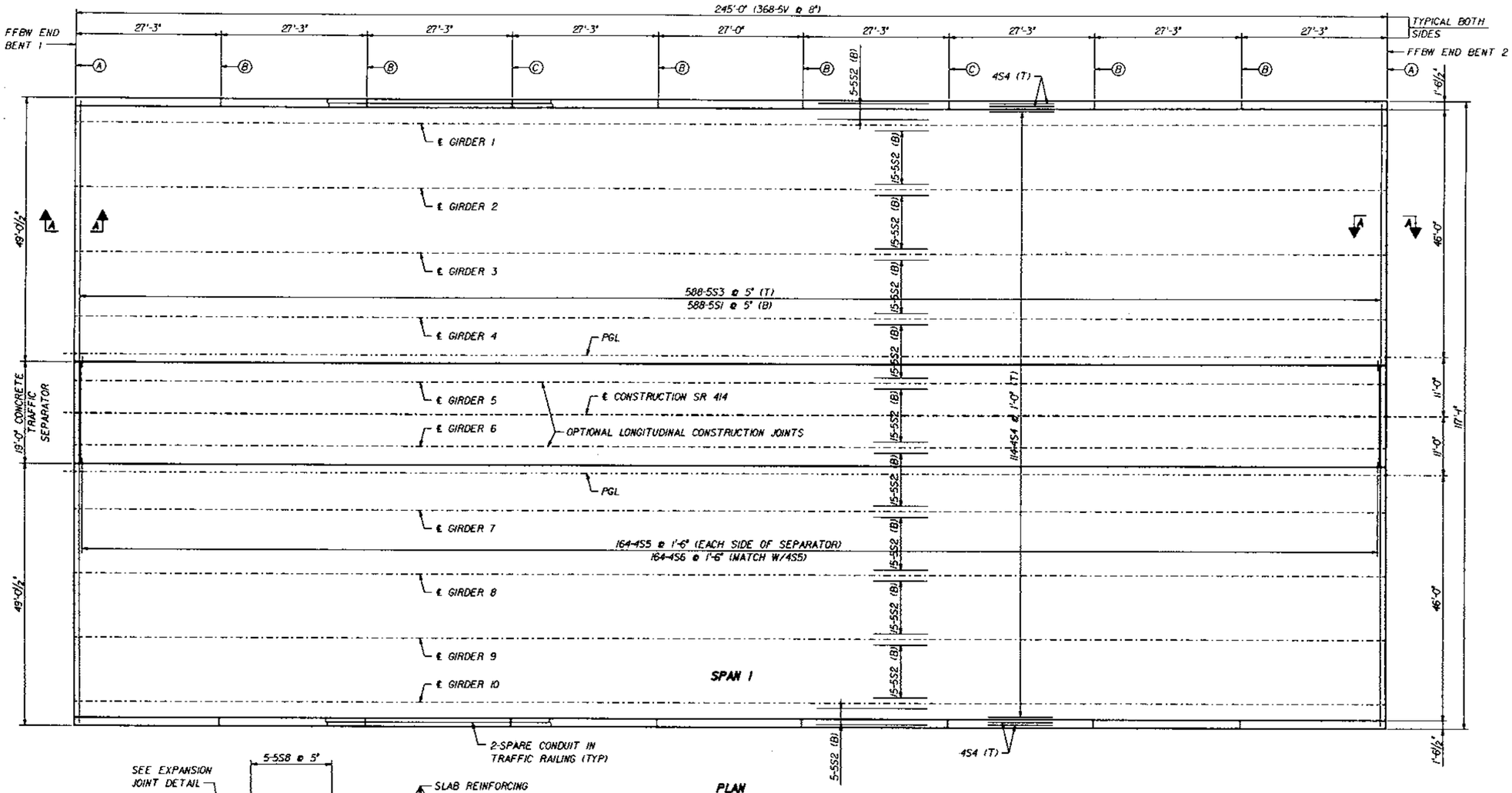

PLAN

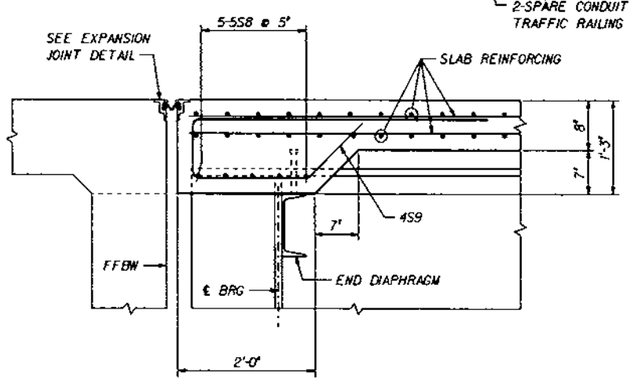

SECTION A-A

NOTES

1. LEGEND:
   - (A) EXPANSION JOINT. SEE DETAILS, SHEET B-27.
   - (B) ℄ ½" V-GROOVE IN BOTH FACES AND TOP OF BARRIER.
   - (C) ℄ ¾" OPEN JOINT IN BARRIER.
2. ALL REINFORCING STEEL SHALL HAVE 2" CLEAR COVER UNLESS NOTED OTHERWISE.
3. BAR 5V IS INCLUDED IN THE COST FOR TRAFFIC RAILING BARRIER.
4. FOR DETAILS OF SPARE CONDUIT IN TRAFFIC RAILING BARRIER SEE SHEET B-25.

WORK THIS SHEET WITH SHEETS B-17 & B-18.

REVISIONS

Date	By	Description	Date	By	Description

	Names	Dates
Drawn by	DCW	10/97
Checked by	MH	10/97
Designed by	MH	10/97
Checked by	ADS	10/97
Approved by	MARK S. EICHOLTZ	

ENGINEER OF RECORD:
URS Greiner, Inc.
P.O. BOX 31646, 7440 WEST
COURTNEY CAMPBELL CAUSEWAY
TAMPA, FLORIDA 33607-1462

LOGO: URS Greiner

SEAL: Mark S. Eicholtz 3/2/98

FLORIDA DEPARTMENT OF TRANSPORTATION
STRUCTURES DESIGN OFFICE

ROAD NO.	COUNTY	PROJECT NO.
SR 414	SEMINOLE	77002-3505

SHEET TITLE: SUPERSTRUCTURE PLAN

Drawing No.

PROJECT NAME: S.R. 414 OVER S.R. 434

Index No.

S:\DNAG\WATLAND.CADD.FG\BDECMB05.FGBJ
FRAMEWRIT
PLOTTED: 16JAN98-15:29:10

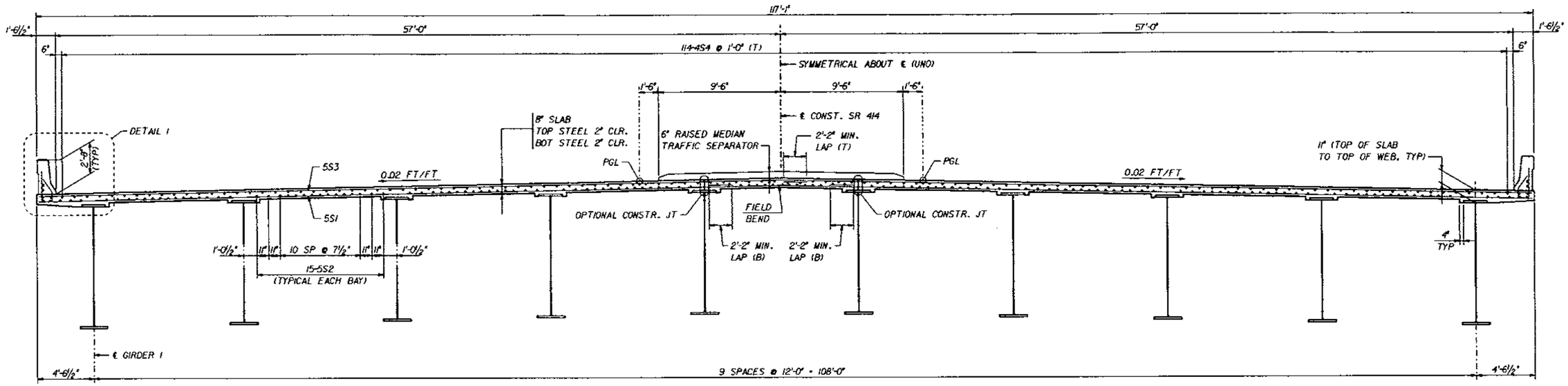

TYPICAL SECTION

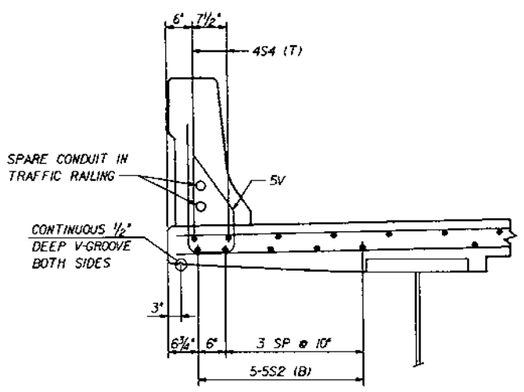

DETAIL 1

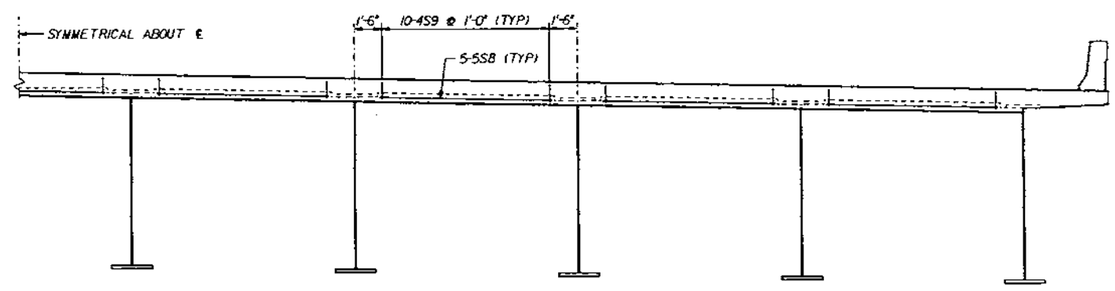

HALF SECTION AT END OF SPAN

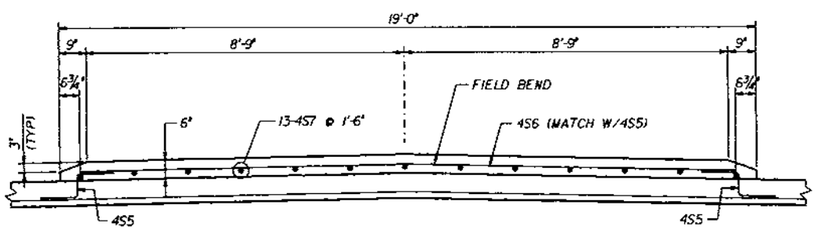

SECTION THRU TRAFFIC SEPARATOR

ESTIMATED QUANTITIES			
ITEM		UNIT	QUANTITY
CLASS II CONCRETE (BRIDGE DECK)	SLAB *	CU. YD.	802.1
	HAUNCH		40.7
	TOTAL		842.8
REINFORCING STEEL (SUPERSTRUCTURE)		LBS.	212,001

* INCLUDES 84.4 CU. YD. FOR TRAFFIC SEPARATOR

WORK THIS SHEET WITH SHEETS B-16 & B-18.

REVISIONS					
Date	By	Description	Date	By	Description

	Names	Dates
Drawn by	DCW	10/97
Checked by	MH	10/97
Designed by	MH	10/97
Checked by	ADS	10/97
Approved by	MARK S. EICHOLTZ	

ENGINEER OF RECORD:
URS Greiner, Inc.
P.O. BOX 31646, 7440 WEST
COURTNEY CAMPBELL CAUSEWAY
TAMPA, FLORIDA 33607-1462

LOGO: URS Greiner

SEAL: Mark S. Eicholtz 3/2/98

FLORIDA DEPARTMENT OF TRANSPORTATION
STRUCTURES DESIGN OFFICE

ROAD NO.	COUNTY	PROJECT NO.
SR 414	SEMINOLE	77002-3505

SHEET TITLE: SUPERSRUCTURE SECTION

PROJECT NAME: S.R. 414 OVER S.R. 434

Drawing No.

Index No.

FRAMMATT

PLOTTED: 28JAN98-12:25:30

ISDIAG: MAITLAND.CADD.FG BDECMB06.FGBI

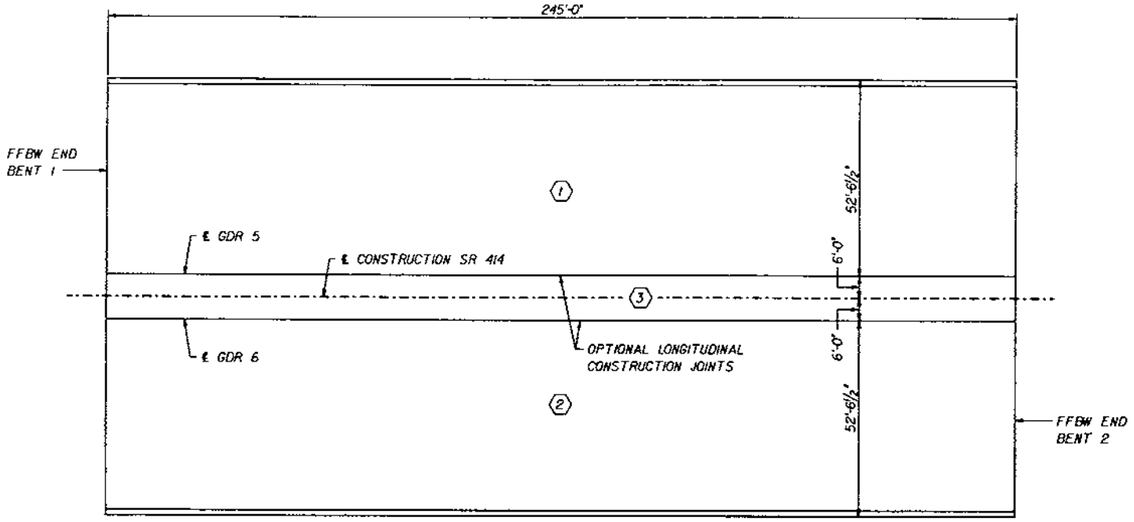

PLAN - OPTIONAL PLACEMENT SEQUENCE

⬡ DENOTES PLACEMENT SEQUENCE

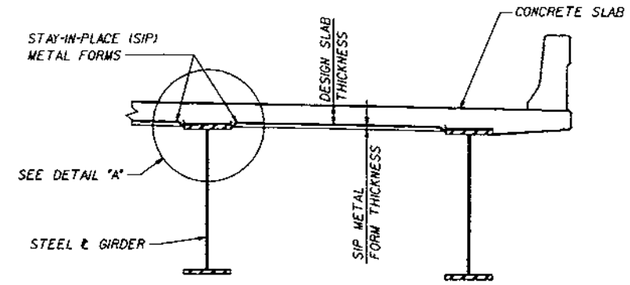

PARTIAL SECTION THRU SUPERSTRUCTURE
(SHOWING TYPICAL DETAILS AND NOTES FOR SIP METAL FORMS)

* DO NOT WELD TO NOR PERMIT WELD SPATTER ON SUPPORTING STEEL GIRDERS, DIAPHRAGMS, BRACING, ETC. ELECTRICAL GROUNDING TO STRUCTURAL STEEL IS PROHIBITED. SEE SECTION 400 OF THE SPECIFICATIONS FOR FIELD WELDING OF SIP FORMS IN PLACE AND PAINTING OF THE TOP FLANGE.

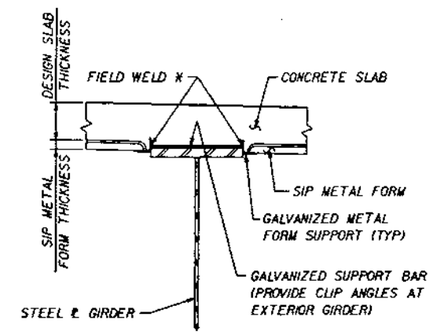

DETAIL "A"

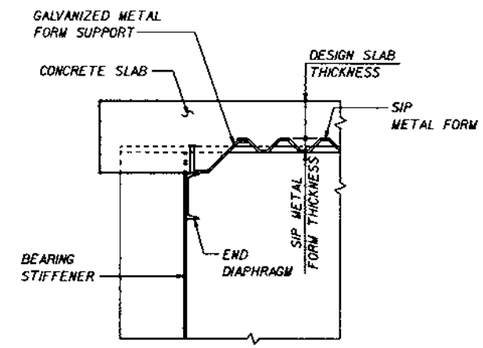

PARTIAL SECTION THRU END OF SPAN

——— TYPICAL DETAILS FOR STAY-IN-PLACE FORMS ———

NOTES

1. CONTRACTOR SHALL SHIFT TRAFFIC ON S.R. 434 DURING BRIDGE DECK PLACEMENT SUCH THAT CONCRETE IS NOT PLACED OVER TRAFFIC. CONTRACTOR'S MOT PLAN SHALL FOLLOW THE RESTRICTIONS SHOWN ON THE TRAFFIC CONTROL GENERAL NOTES SHEET IN THE ROADWAY PLANS. CONTRACTOR SHALL SUBMIT IN WRITING THEIR PROPOSED MOT PLAN TO THE PROJECT ENGINEER FOR APPROVAL. CONTRACTOR SHALL ALLOW 14 DAYS (BEGINNING ON THE DATE OF RECEIPT) FOR THE DEPARTMENT'S REVIEW. THE MOT PLANS SHALL BE PREPARED, SIGNED AND SEALED BY A PROFESSIONAL ENGINEER REGISTERED IN THE STATE OF FLORIDA.
2. CONTRACTOR SHALL TAKE INTO CONSIDERATION THE TEMPERATURE AFFECTS ON THE BEAM CAMBER WHEN SELECTING TIME OF DAY FOR CONCRETE PLACEMENT AND SETTING SCREED.
3. END DIAPHRAGMS, INTERMEDIATE CROSS FRAMES AND SLAB FORMS BETWEEN GIRDERS 5 AND 6 SHALL NOT BE INSTALLED UNTIL THE DIFFERENTIAL DEFLECTIONS BETWEEN PLACEMENTS ① AND ② HAVE BEEN EQUALIZED.
4. PLACEMENT ③ SHALL NOT BE PLACED ADJACENT TO PLACEMENT ① OR ② UNTIL PREVIOUSLY PLACED UNIT IS A MINIMUM OF 48 HOURS OLD.
5. THE MEDIAN TRAFFIC SEPARATOR MAY BE PLACED AT THE SAME TIME AS THE DECK CONCRETE FOR PLACEMENT ③.

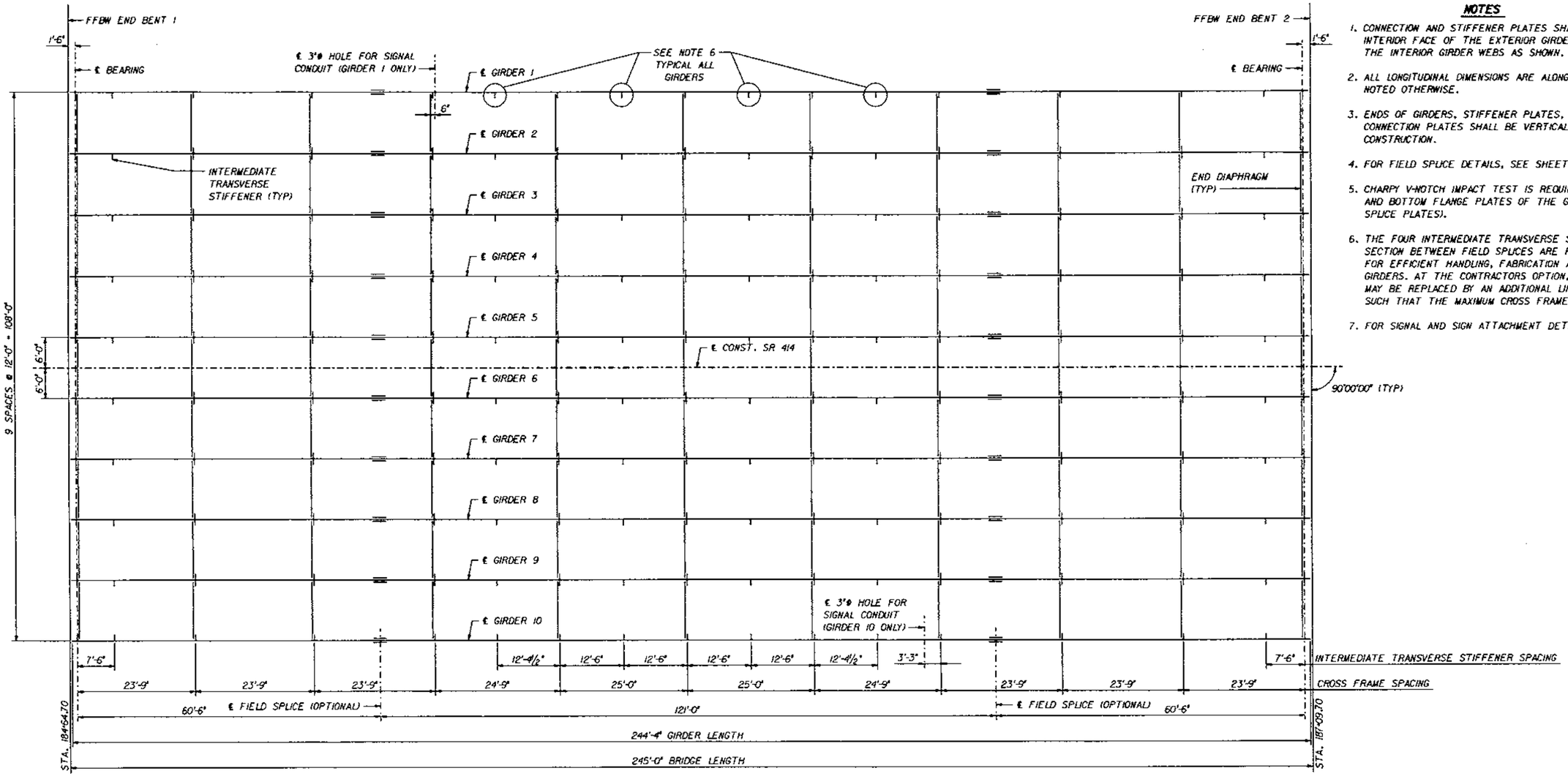

NOTES

1. CONNECTION AND STIFFENER PLATES SHALL BE LOCATED ON THE INTERIOR FACE OF THE EXTERIOR GIRDER WEBS AND LOCATED ON THE INTERIOR GIRDER WEBS AS SHOWN.
2. ALL LONGITUDINAL DIMENSIONS ARE ALONG ℄ GIRDER, UNLESS NOTED OTHERWISE.
3. ENDS OF GIRDERS, STIFFENER PLATES, BEARING STIFFENERS AND CONNECTION PLATES SHALL BE VERTICAL UPON COMPLETION OF CONSTRUCTION.
4. FOR FIELD SPLICE DETAILS, SEE SHEET B-22.
5. CHARPY V-NOTCH IMPACT TEST IS REQUIRED FOR ALL WEB PLATES AND BOTTOM FLANGE PLATES OF THE GIRDERS (INCLUDING FIELD SPLICE PLATES).
6. THE FOUR INTERMEDIATE TRANSVERSE STIFFENERS IN THE MIDDLE SECTION BETWEEN FIELD SPLICES ARE REQUIRED BY AASHTO FOR EFFICIENT HANDLING, FABRICATION AND ERECTION OF THE GIRDERS. AT THE CONTRACTORS OPTION, THESE STIFFENERS MAY BE REPLACED BY AN ADDITIONAL LINE OF CROSS FRAMES SUCH THAT THE MAXIMUM CROSS FRAME SPACING IS 23'-9".
7. FOR SIGNAL AND SIGN ATTACHMENT DETAILS, SEE SHEET B-24.

FRAMING PLAN

REVISIONS					
Date	By	Description	Date	By	Description

	Names	Dates
Drawn by	DCW	10/97
Checked by	MH	10/97
Designed by	MH	10/97
Checked by	MSE	10/97
Approved by	MARK S. EICHOLTZ	

ENGINEER OF RECORD:
URS Greiner, Inc.
P.O. BOX 31646, 7466 WEST
COURTNEY CAMPBELL CAUSEWAY
TAMPA, FLORIDA 33607-1462

LOGO: URS Greiner

SEAL: Mark S. Eichholtz 3/2/98

FLORIDA DEPARTMENT OF TRANSPORTATION
STRUCTURES DESIGN OFFICE

ROAD NO.	COUNTY	PROJECT NO.
SR 414	SEMINOLE	77002-3505

SHEET TITLE: FRAMING PLAN

PROJECT NAME: S.R. 414 OVER S.R. 434

Drawing No.

Index No.

FRAMMOIT

PLOTTED: 28JAN98-07:18:50

#!#DIAG! MAITLAND.CADD.FG BFRPM301.FGB

FED. ROAD DIV. NO.	STATE	PROJECT NO.	FISCAL YEAR	SHEET NO.
3	FLA.	—		B-20

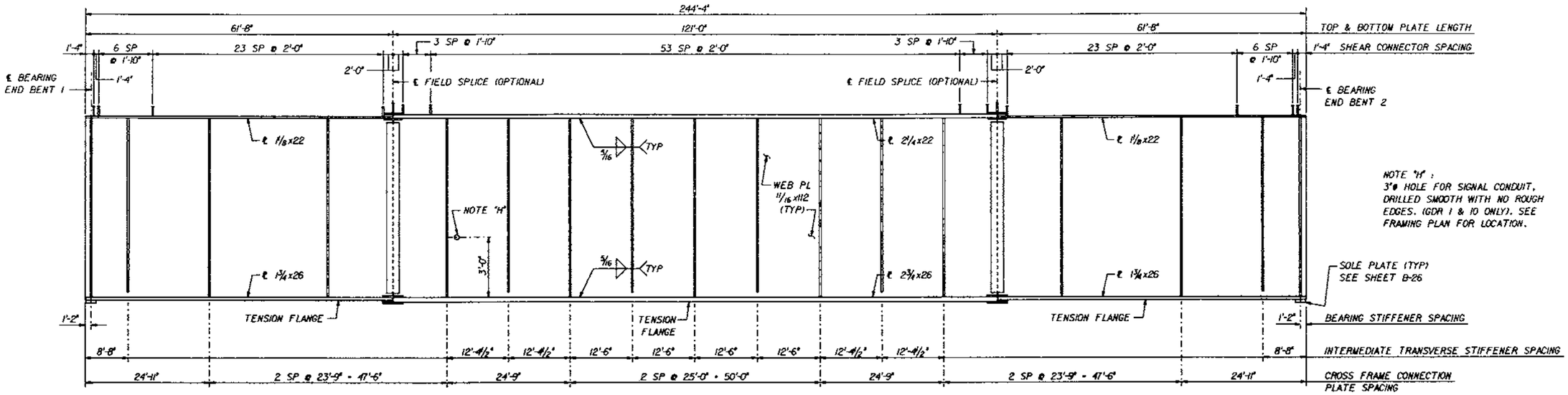

NOTE "H":
3"ø HOLE FOR SIGNAL CONDUIT, DRILLED SMOOTH WITH NO ROUGH EDGES. (GDR 1 & 10 ONLY). SEE FRAMING PLAN FOR LOCATION.

GIRDER ELEVATION

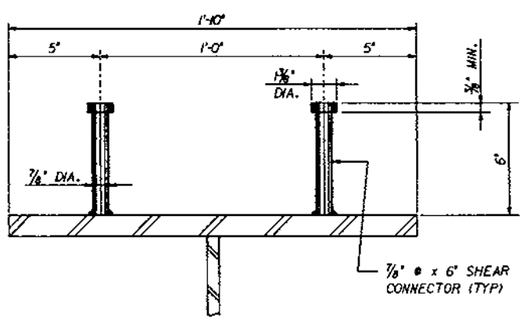

SHEAR CONNECTOR DETAIL

REVISIONS					
Date	By	Description	Date	By	Description

	Names	Dates
Drawn by	DCW	10/97
Checked by	MH	10/97
Designed by	MH	10/97
Checked by	MSE	10/97
Approved by	MARK S. EICHOLTZ	

ENGINEER OF RECORD:
URS Greiner, Inc.
P.O. BOX 2648, 7660 WEST
COURTNEY CAMPBELL CAUSEWAY
TAMPA, FLORIDA 33607-1462

LOGO: URS Greiner

SEAL: Mark S. Eicholtz 3/2/98

FLORIDA DEPARTMENT OF TRANSPORTATION
STRUCTURES DESIGN OFFICE

ROAD NO.	COUNTY	PROJECT NO.
SR 414	SEMINOLE	77002-3505

SHEET TITLE: GIRDER ELEVATION

PROJECT NAME: S.R. 414 OVER S.R. 434

Drawing No.

Index No.

PLOTTED: 28JAN98-07.29.20

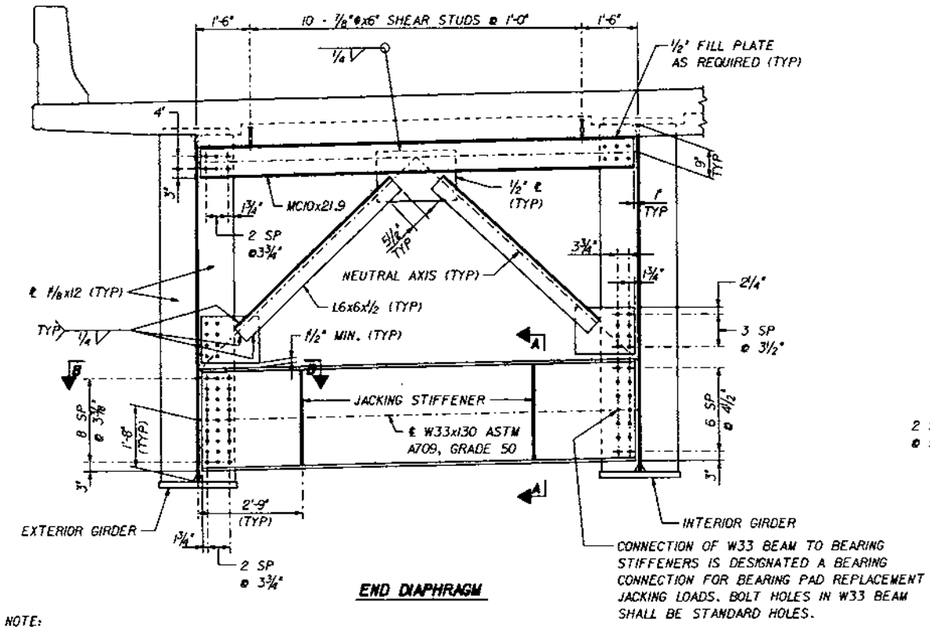

CONNECTION OF W33 BEAM TO BEARING STIFFENERS IS DESIGNATED A BEARING CONNECTION FOR BEARING PAD REPLACEMENT JACKING LOADS. BOLT HOLES IN W33 BEAM SHALL BE STANDARD HOLES.

END DIAPHRAGM

NOTE:
END DIAPHRAGMS AND INTERMEDIATE CROSS FRAMES BETWEEN GIRDERS 5 AND 6 SHALL NOT BE INSTALLED UNTIL THE DIFFERENTIAL DEFLECTIONS BETWEEN THE LEFT AND RIGHT DECK PLACEMENTS ARE EQUALIZED, BUT MUST BE INSTALLED AND SECURED PRIOR TO POURING PLACEMENT 3. (SEE SHEET B-18).

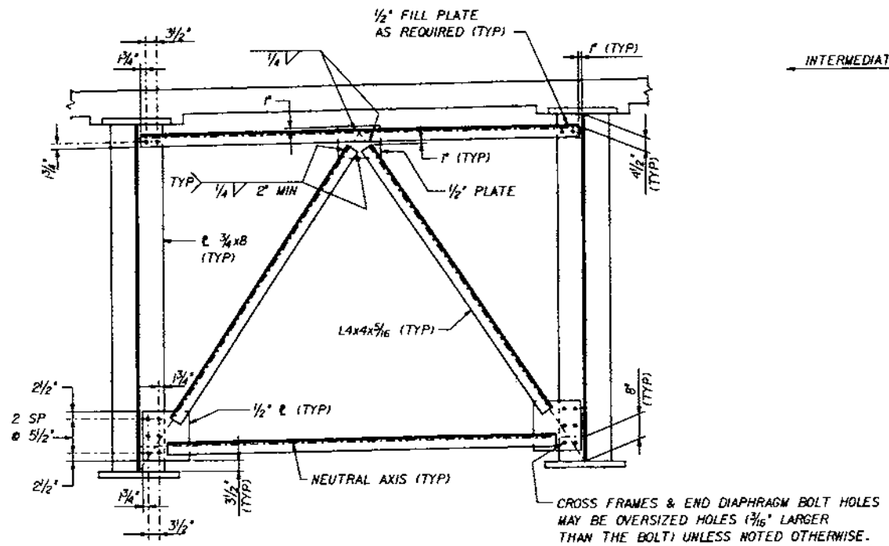

CROSS FRAMES & END DIAPHRAGM BOLT HOLES MAY BE OVERSIZED HOLES (3/16" LARGER THAN THE BOLT) UNLESS NOTED OTHERWISE. BOLT HOLES IN THE CONNECTION PLATES AND BEARING STIFFENERS SHALL BE STANDARD HOLES (1/16" LARGER THAN THE BOLT).

TYPICAL INTERMEDIATE CROSS FRAME

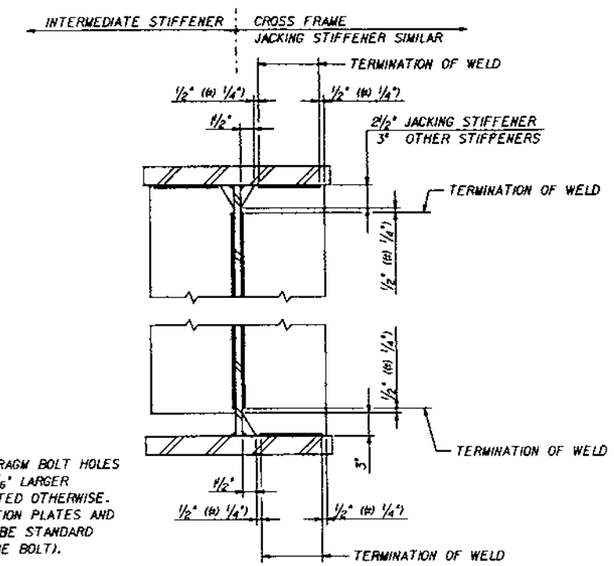

WELD TERMINATION AND COPING DETAILS (1)

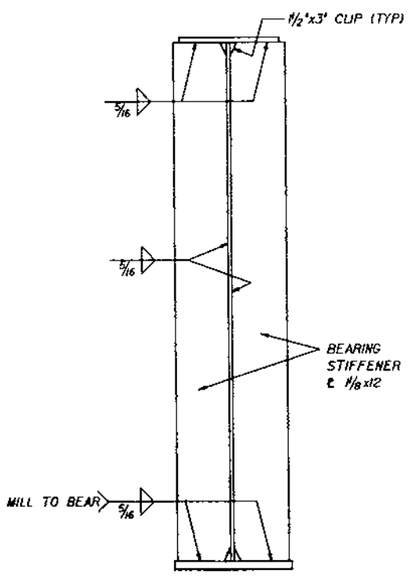

BEARING STIFFENER

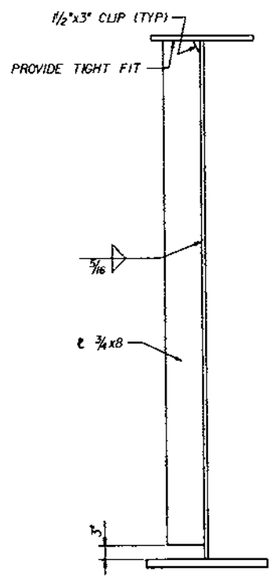

INTERMEDIATE TRANSVERSE STIFFENER

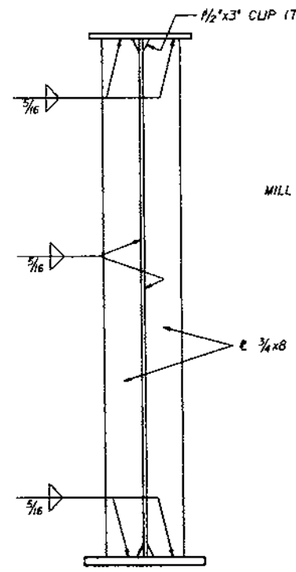

CROSS FRAME CONNECTION PLATE

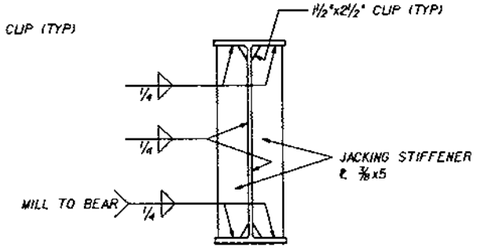

SECTION A-A

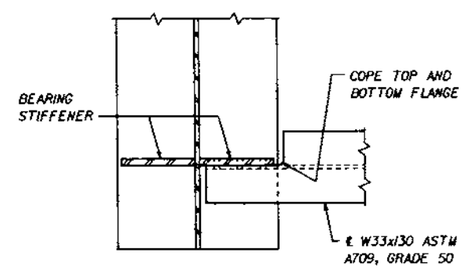

SECTION B-B

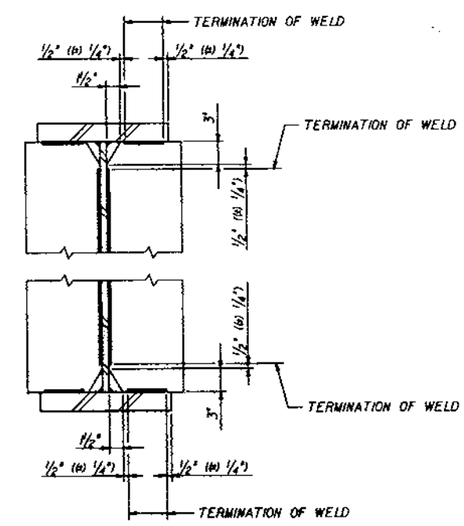

WELD TERMINATION AND COPING DETAILS (2)

REVISIONS					
Date	By	Description	Date	By	Description

	Names	Dates
Drawn by	DCW	10/97
Checked by	MH	10/97
Designed by	MH	10/97
Checked by	MSE	10/97
Approved by	MARK S. EICHOLTZ	

ENGINEER OF RECORD:
URS Greiner, Inc.
P.O. BOX 33646, 7660 WEST COURTNEY CAMPBELL CAUSEWAY
TAMPA, FLORIDA 33607-1462

LOGO: URS Greiner

SEAL: Mark S. Eicholtz 3/2/98

FLORIDA DEPARTMENT OF TRANSPORTATION
STRUCTURES DESIGN OFFICE

ROAD NO.	COUNTY	PROJECT NO.
SR 414	SEMINOLE	77002-3505

SHEET TITLE: GIRDER DETAILS (1)

PROJECT NAME: S.R. 414 OVER S.R. 434

Drawing No.

Index No.

$ISCIA6; MAITLAND.CADD.FG; BGROWBOI.FGB4
FRAMMAIT
PLOTTED: 26FEB98-16:02:40

FED. ROAD DIV. NO.	STATE	PROJECT NO.	FISCAL YEAR	SHEET NO.
3	FLA.	—		B-22

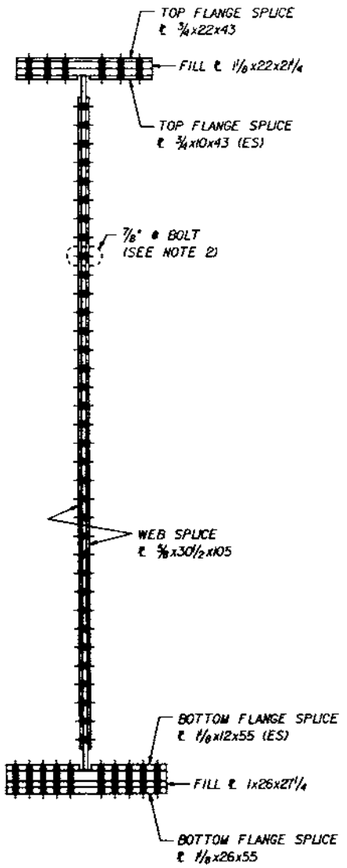

SECTION A-A

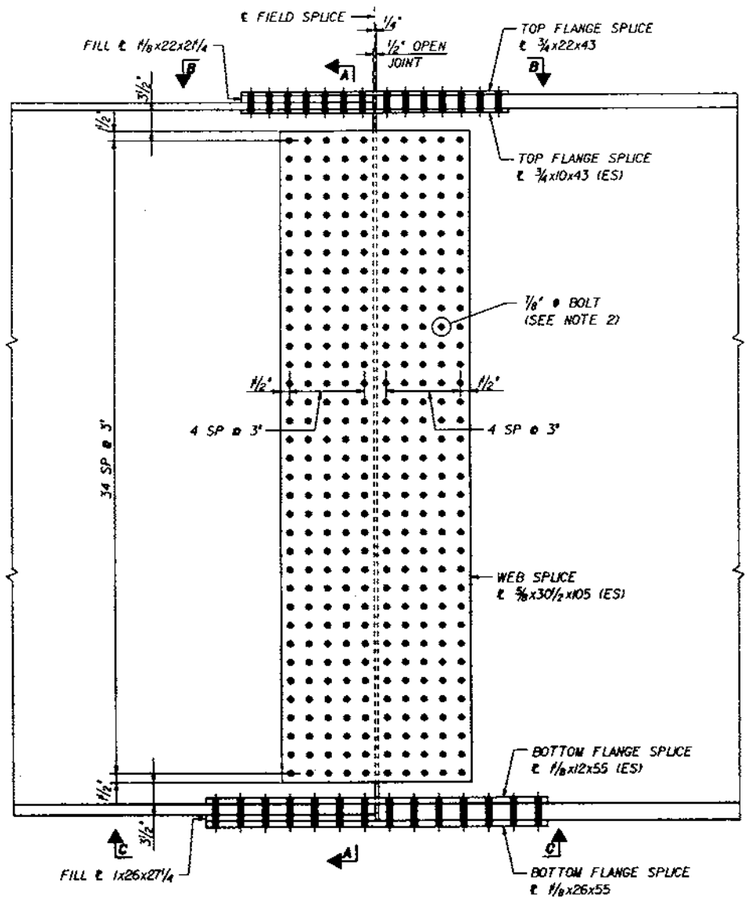

ELEVATION - GIRDER SPLICE

NOTES

1. ALL SPLICE AND FILL PLATES SHALL BE ASTM A709 GRADE 50. UNLESS NOTED OTHERWISE.
2. ALL BOLTED CONNECTIONS SHALL BE MADE WITH ⅞" DIAMETER HIGH-STRENGTH BOLTS DESIGNATED AS SLIP-CRITICAL (CLASS A CONTACT SURFACE) CONNECTIONS IN ACCORDANCE WITH ASTM A325.
3. ALL PARTS FOR EACH FIELD SPLICE SHALL BE COMPLETELY SHOP ASSEMBLED, TAKING INTO ACCOUNT THEIR RELATIVE POSITION IN THE FINISHED STRUCTURE, DUE TO GRADE AND CAMBER. SECTIONS SHALL BE MATCH MARKED WHILE SO ASSEMBLED.
4. FIELD SPLICE BOLT HOLES SHALL BE 1/16" LARGER IN DIAMETER THAN THE BOLT. GENERAL REAMING OF THE HOLES FOR EACH FIELD SPLICE WILL BE PERMITTED WHILE ALL PARTS FOR EACH SPLICE ARE COMPLETELY SHOP ASSEMBLED IN THE CORRECT POSITION.
5. BOLT HEADS SHALL BE PLACED ON THE EXPOSED SIDE OF EXTERIOR GIRDER WEBS AND THE BOTTOM SIDE OF FLANGES AT GIRDER SPLICES.

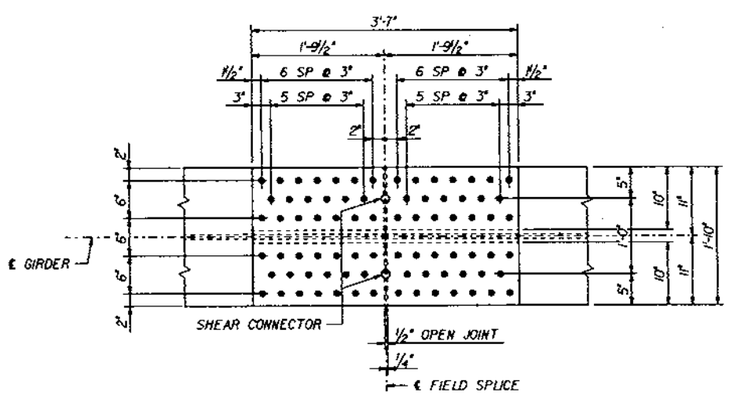

VIEW B-B

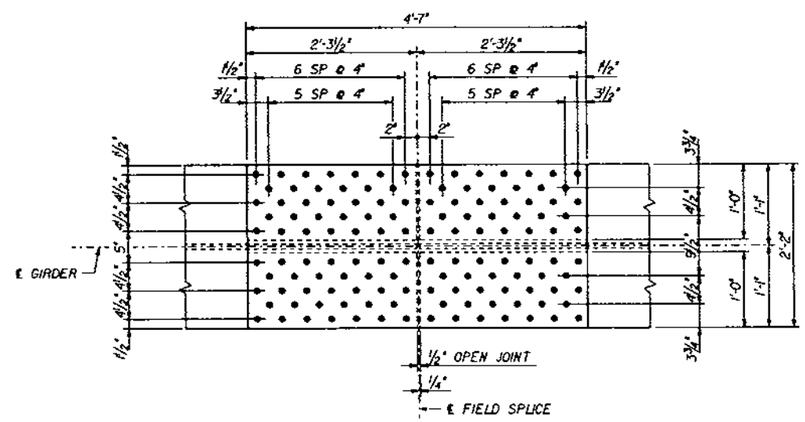

VIEW C-C

REVISIONS					
Date	By	Description	Date	By	Description

	Names	Dates
Drawn by	DCW	10/07
Checked by	MH	10/97
Designed by	MH	10/97
Checked by	WSE	10/97
Approved by	MARK S. EICHOLTZ	

ENGINEER OF RECORD:
URS Greiner, Inc.
P.O. BOX 31646, 7640 WEST
COURTNEY CAMPBELL CAUSEWAY
TAMPA, FLORIDA 33607-1462

LOGO: URS Greiner

SEAL: Mark S. Eicholtz 3/2/98

FLORIDA DEPARTMENT OF TRANSPORTATION
STRUCTURES DESIGN OFFICE

ROAD NO.	COUNTY	PROJECT NO.
SR 414	SEMINOLE	77002-3505

SHEET TITLE: GIRDER DETAILS (2)

PROJECT NAME: S.R. 414 OVER S.R. 434

Drawing No.

Index No.

PLOTTED: 26FEB98-15:24:40

FRAMEHOLT

D:FG BGROMB03.FGB1

MAITLAND

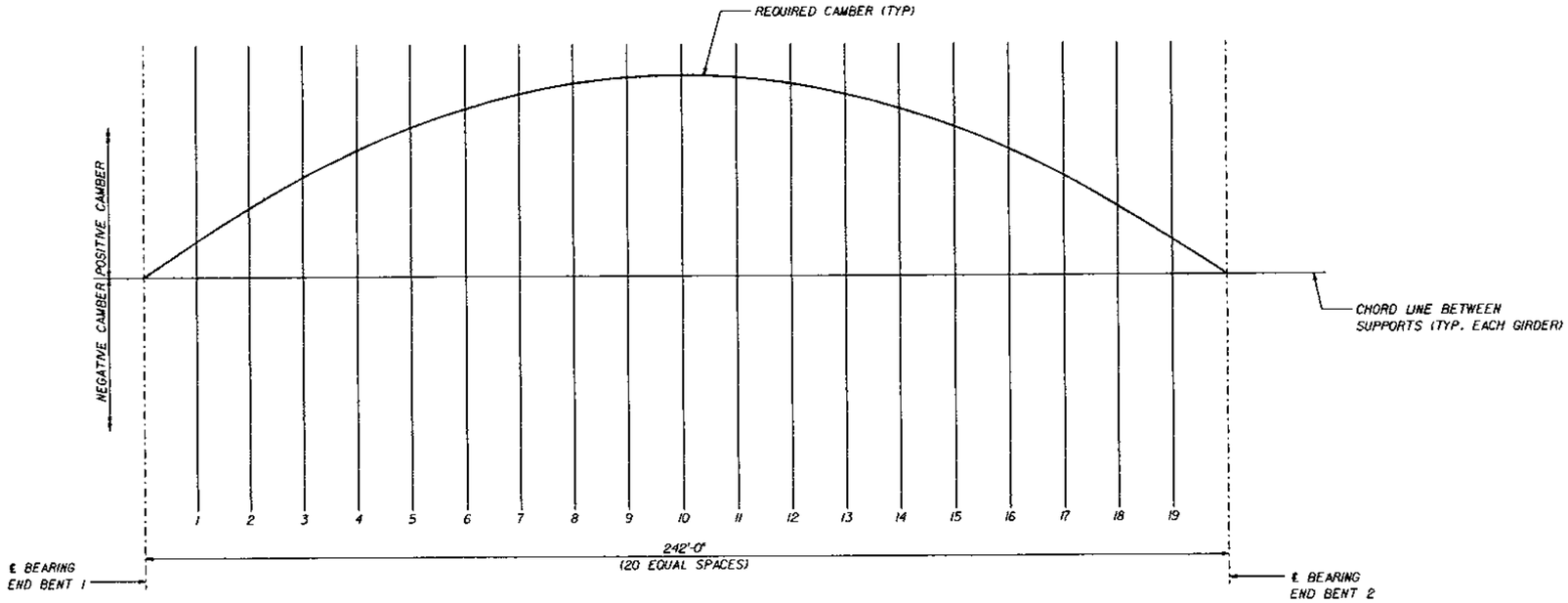

NOTES

1. ALL CAMBER ORDINATES ARE GIVEN IN INCHES.
2. STEEL IS CAMBER ORDINATE DUE TO THE STEEL PLATE GIRDER, CROSS FRAMES AND OTHER MISCELLANEOUS STEEL ITEMS.
3. SLAB IS CAMBER ORDINATE DUE TO THE CONCRETE DECK SLAB, HAUNCHES AND STAY-IN-PLACE FORMS.
4. S.D.L. IS SUPERIMPOSED DEAD LOAD CONSISTING OF THE CONCRETE TRAFFIC RAILING BARRIER, CONCRETE TRAFFIC SEPARATOR AND FUTURE WEARING SURFACE.
5. THE CAMBER ORDINATE FOR VERTICAL CURVE INCLUDES THE VERTICAL ADJUSTMENT DUE TO THE VERTICAL CURVE AND CROSS SLOPE.
6. GIRDER LENGTHS SHALL BE ADJUSTED FOR GIRDERS ON GRADE. SHOP DRAWINGS SHALL BE PREPARED ACCORDINGLY.
7. CAMBERED GIRDER LENGTHS SHALL BE ADJUSTED AND SOLE PLATES ARE TO BE PLACED ON THE CAMBERED GIRDER AND SHALL BE ALIGNED WITH THE ANCHOR BOLTS AFTER THE DEAD LOAD DEFLECTION HAS OCCURRED. SHOP DRAWINGS SHALL BE PREPARED ACCORDINGLY.
8. CONTRACTOR SHALL REVISE CAMBER VALUES IF BRIDGE DECK IS PLACED IN A DIFFERENT SEQUENCE THAN SHOWN ON SHEET B-18.

GIRDER	ITEM	℄ BRG. END BENT 1	SPAN 1																			℄ BRG. END BENT 2
			1	2	3	4	5	6	7	8	9	10	11	12	13	14	15	16	17	18	19	
1 THRU 10	STEEL	0	0.719	1.411	2.051	2.617	3.090	3.475	3.784	4.009	4.145	4.191	4.145	4.009	3.784	3.475	3.090	2.617	2.051	1.411	0.719	0
	SLAB	0	1.613	3.164	4.599	5.868	6.930	7.794	8.486	8.990	9.297	9.400	9.297	8.990	8.486	7.794	6.930	5.868	4.599	3.164	1.613	0
	S.D.L.	0	0.311	0.610	0.889	1.138	1.350	1.526	1.666	1.768	1.830	1.851	1.830	1.768	1.666	1.526	1.350	1.138	0.889	0.610	0.311	0
	TOTAL	0	2.643	5.185	7.539	9.623	11.370	12.795	13.936	14.767	15.272	15.442	15.272	14.767	13.936	12.795	11.370	9.623	7.539	5.185	2.643	0
	VERTICAL CURVE	0	1.282	2.429	3.441	4.318	5.060	5.667	6.139	6.477	6.679	6.746	6.679	6.477	6.139	5.667	5.060	4.318	3.441	2.429	1.282	0
	REQUIRED CAMBER	0	3.925	7.614	10.980	13.941	16.430	18.462	20.075	21.244	21.951	22.188	21.951	21.244	20.075	18.462	16.430	13.941	10.980	7.614	3.925	0

REVISIONS					
Date	By	Description	Date	By	Description

	Names	Dates
Drawn by	DCW	10/97
Checked by	MH	10/97
Designed by	MH	10/97
Checked by	MSE	10/97
Approved by	MARK S. EICHOLTZ	

ENGINEER OF RECORD:
URS Greiner, Inc.
P.O. BOX 31644, 7440 WEST
COURTNEY CAMPBELL CAUSEWAY
TAMPA, FLORIDA 33607-1462

LOGO: URS Greiner

SEAL: Mark S. Eicholtz 3/2/98

FLORIDA DEPARTMENT OF TRANSPORTATION
STRUCTURES DESIGN OFFICE

ROAD NO.	COUNTY	PROJECT NO.
SR 414	SEMINOLE	77002-3505

SHEET TITLE: GIRDER DETAILS (3)

PROJECT NAME: S.R. 414 OVER S.R. 434

Drawing No.

Index No.

$IBDIAG: WATTLAND.CADD.FG BGROWD02.FG31
FRAMHALT
PLOTTED: 27JAN98-16:08:00

FED. ROAD DIV. NO.	STATE	PROJECT NO.	FISCAL YEAR	SHEET NO.
3	FLA.	—		B-24

NOTE:
PAYMENT FOR GIRDER MOUNT SIGN AND SIGNALS IS INCLUDED IN THE SIGNING AND SIGNALIZATION PLAN'S BID ITEMS. ATTACHMENT CLAMPS WITH 7/8"ø BOLTS, CAST ALUMINUM CAPS WITH SCREWS, 4"ø METAL PIPE, 2"ø ELBOW CONDUIT AND REDUCER AND ALL OTHER MOUNTING HARDWARE ARE CONSIDERED PART OF THE TRAFFIC SIGNAL ASSEMBLY AND SHALL BE INCLUDED IN THE BID ITEM 650-1-131.

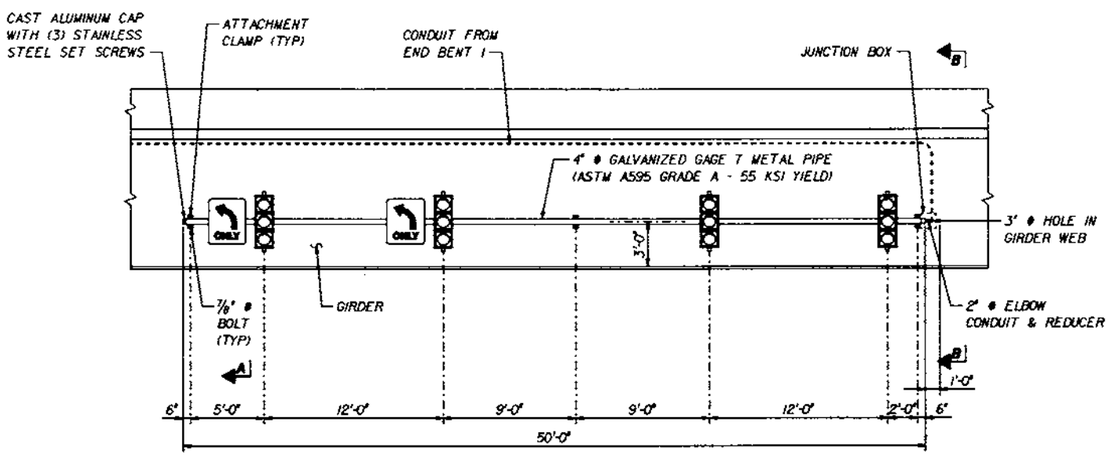

ELEVATION

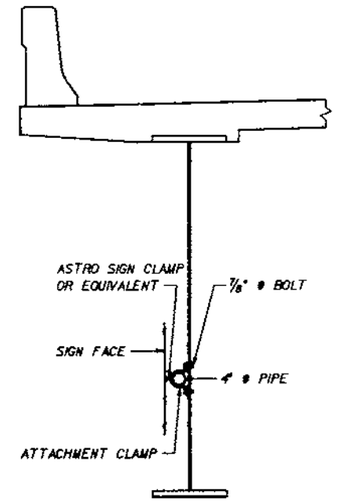

SECTION A-A

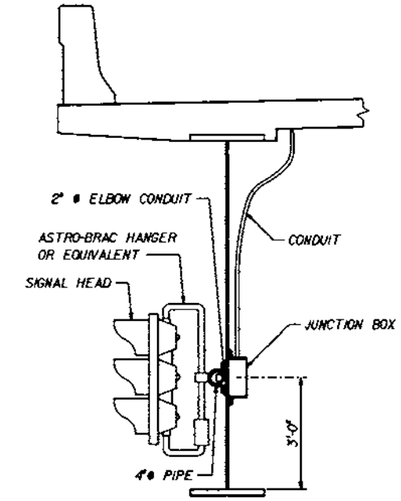

SECTION B-B

GIRDER MOUNT SIGN AND SIGNAL DETAILS

(GIRDER 10 SHOWN, GIRDER 1 SIMILAR)

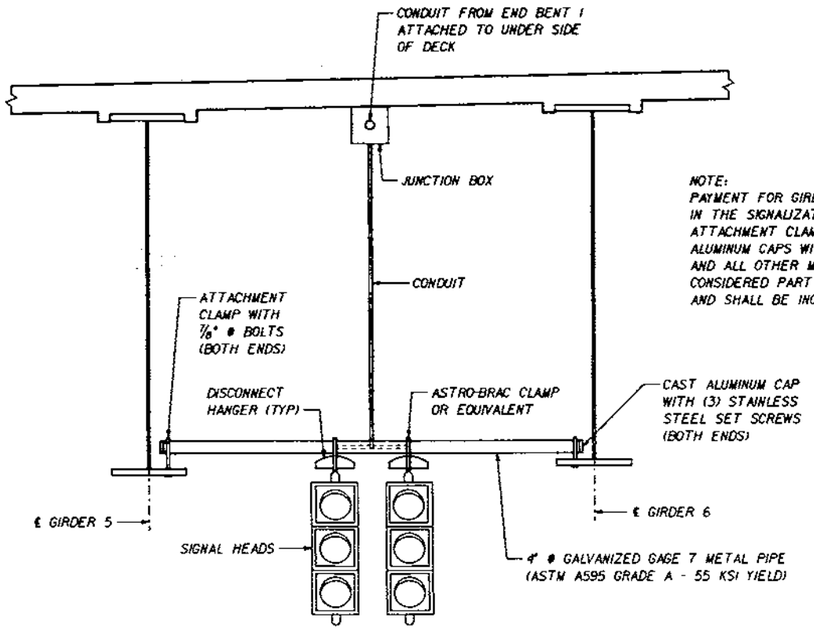

NOTE:
PAYMENT FOR GIRDER HUNG SIGNAL IS INCLUDED IN THE SIGNALIZATION PLAN'S BID ITEMS. ATTACHMENT CLAMPS WITH 7/8"ø BOLTS, CAST ALUMINUM CAPS WITH SCREWS, 4"ø METAL PIPE AND ALL OTHER MOUNTING HARDWARE ARE TO BE CONSIDERED PART OF THE TRAFFIC SIGNAL ASSEMBLY AND SHALL BE INCLUDED IN BID ITEM 650-1-132.

HUNG SIGNAL GIRDER DETAILS

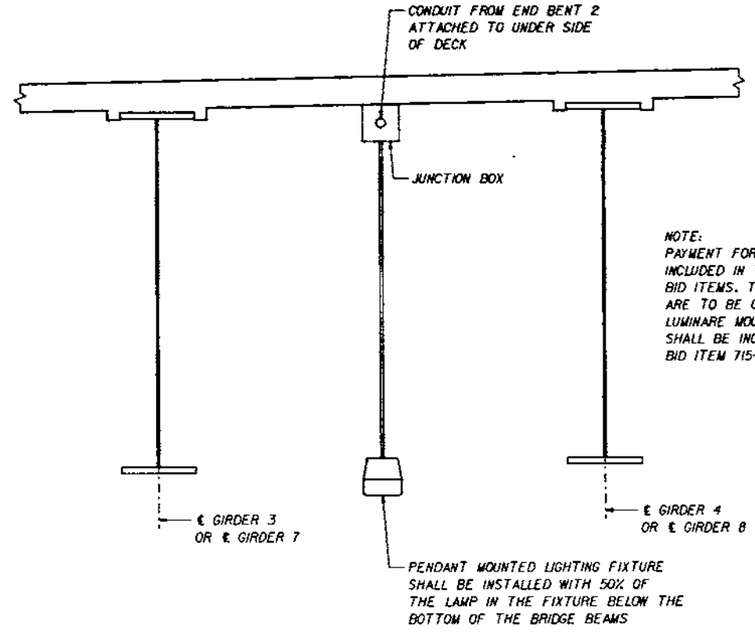

NOTE:
PAYMENT FOR PENDANT LIGHTING IS INCLUDED IN THE LIGHTING PLAN'S BID ITEMS. THE JUNCTION BOXES ARE TO BE CONSIDERED PART OF THE LUMINARE MOUNTING HARDWARE AND SHALL BE INCLUDED IN THE LUMINARE BID ITEM 715-11-126.

PENDANT LIGHTING DETAILS

REVISIONS					
Date	By	Description	Date	By	Description

	Names	Dates
Drawn by	KAC	10/97
Checked by	MSE	10/97
Designed by	MSE	10/97
Checked by	ADS	10/97
Approved by	MARK S. EICHOLTZ	

ENGINEER OF RECORD:
URS Greiner, Inc.
P.O. BOX 31646, 7660 WEST COURTNEY CAMPBELL CAUSEWAY
TAMPA, FLORIDA 33607-1462

LOGO: URS Greiner

SEAL: Mark S. Eicholtz 3/2/98

FLORIDA DEPARTMENT OF TRANSPORTATION
STRUCTURES DESIGN OFFICE

ROAD NO.	COUNTY	PROJECT NO.
SR 414	SEMINOLE	77002-3505

SHEET TITLE: SIGNAL, SIGN & LIGHT ATTACHMENT DETAILS

PROJECT NAME: S.R. 414 OVER S.R. 434

Drawing No.

Index No.

PLOTTED: 15JAN98-15:33:10

FRAME4B1T

$IRDIAG: MAITLAND-CADD.FG | 60RDNB05.FGBJ

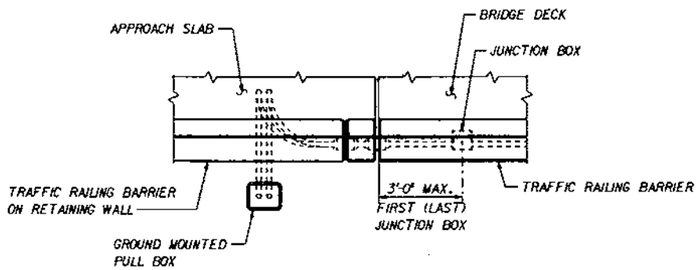

PLAN

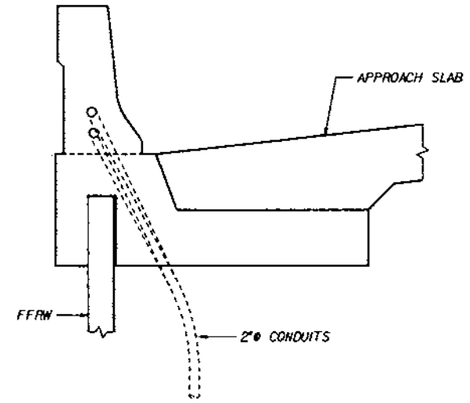

SECTION THRU CONCRETE TRAFFIC RAILING BARRIER ON WALL

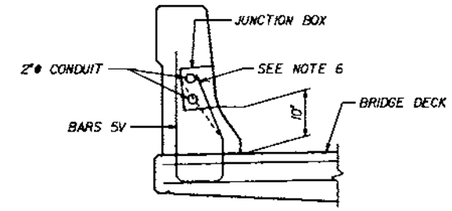

SECTION THRU CONCRETE TRAFFIC RAILING BARRIER ON BRIDGE
(SHOWN AT JUNCTION BOX)

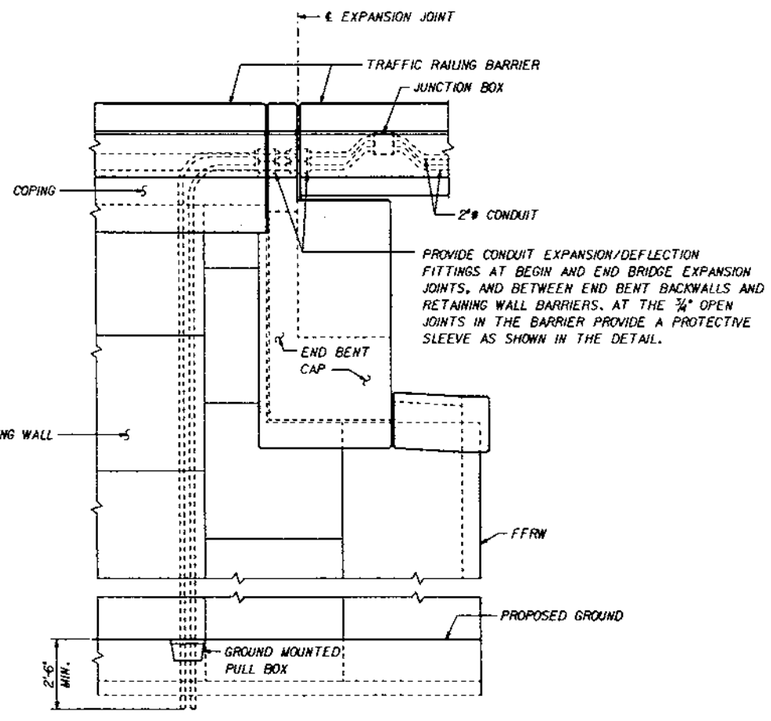

END ELEVATION AT END BENT

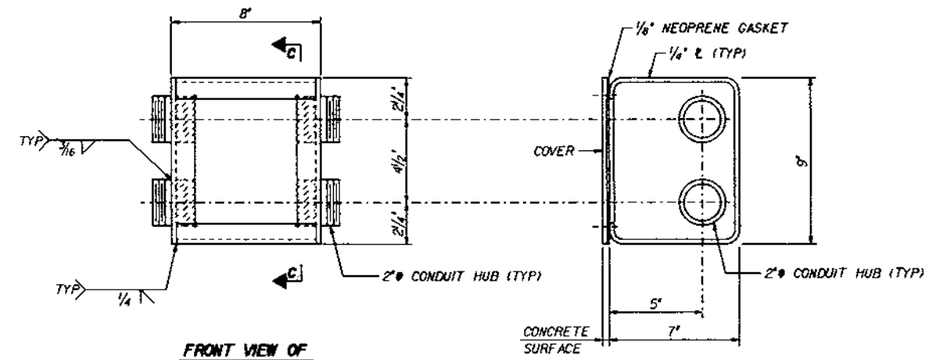

FRONT VIEW OF JUNCTION BOX
(COVER REMOVED)

SECTION C-C

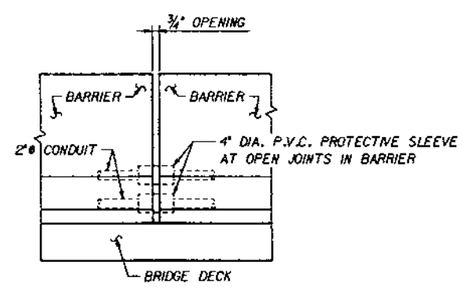

BARRIER ¾" OPEN JOINT DETAIL

NOTES

1. CONDUIT SHALL BE INSTALLED AS DETAILED ON THIS SHEET IN BOTH TRAFFIC RAILING BARRIERS ON BRIDGE NUMBER 770083.
2. STEEL FOR JUNCTION BOXES SHALL CONFORM WITH ASTM A709 GRADE 36. THE BOXES SHALL BE HOT DIP GALVANIZED AFTER FABRICATION. IN LIEU OF STEEL BOXES THE CONTRACTOR MAY SUBMIT FOR APPROVAL MOLDED P.V.C. BOXES (SCHEDULE 40)
3. JUNCTION BOXES SHALL BE MOUNTED AT EACH END AND ON EACH SIDE AS SHOWN ON THIS SHEET. AN ADDITIONAL JUNCTION BOX SHALL BE MOUNTED NEAR MIDSPAN ON EACH SIDE. THE DISTANCE BETWEEN JUNCTION BOXES SHALL NOT EXCEED 200 FEET.
4. ALL CONDUITS SHALL BE RIGID GALVANIZED STEEL OR SCHEDULE 40 P.V.C. BENDS IN CONDUIT SHALL BE MADE USING A RADIUS NOT LESS THAN 10⅝".
5. ALL EXPANSION/DEFLECTION FITTINGS SHALL BE METALLIC AS PROVIDED BY THE FOLLOWING MANUFACTURERS: CROUSE-HINDS, APPLETON, O.Z. OR APPROVED EQUAL. IF PVC CONDUITS ARE PROVIDED, ADAPTERS TO CONNECT NON-METALLIC TO METALLIC CONDUIT OR FITTING SHALL ALSO BE PROVIDED AS NEEDED.
6. SHIFT AND/OR BEND 5P AND 5V BARS WHERE NECESSARY AROUND JUNCTION BOX AND THE ADJOINING CONDUIT.
7. PAYMENT: THE COST OF ALL LABOR AND MATERIALS REQUIRED FOR THE CONSTRUCTION OF ALL CONDUITS, EXPANSION/DEFLECTION FITTINGS, JUNCTION BOXES, PULL BOXES, MISCELLANEOUS HARDWARE, AND NECESSARY FITTINGS REQUIRED FOR COMPLETION OF THE INSTALLATION WITHIN THE LIMITS SHOWN ON THIS SHEET, SHALL BE INCLUDED IN THE CONTRACTOR'S BID PRICE FOR THE TRAFFIC RAILING BARRIER.

REVISIONS					
Date	By	Description	Date	By	Description

	Names	Dates
Drawn by	DCW	10/97
Checked by	MSE	10/97
Designed by	MSE	10/97
Checked by	ADS	10/97
Approved by	MARK S. EICHOLTZ	

ENGINEER OF RECORD:
URS Greiner, Inc.
P.O. BOX 33646, 7660 WEST
COURTNEY CAMPBELL CAUSEWAY
TAMPA, FLORIDA 33647-1462

LOGO: URS Greiner

SEAL: Mark S. Eicholtz 3/2/98

FLORIDA DEPARTMENT OF TRANSPORTATION
STRUCTURES DESIGN OFFICE

ROAD NO.	COUNTY	PROJECT NO.
SR 414	SEMINOLE	77002-3505

SHEET TITLE: CONDUIT IN TRAFFIC RAILING BARRIER

PROJECT NAME: S.R. 414 OVER S.R. 434

Drawing No.

Index No.

$$$DIAG: WATTLAND.CADD.FG BUTUMBO.FGBI
FRAMEMAIT
PLOTTED: 16JAN98-15.37.00

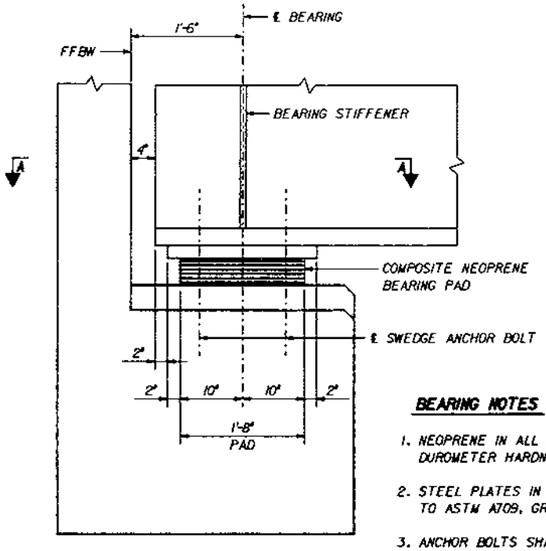

PART SECTION AT GIRDER END

BEARING NOTES

1. NEOPRENE IN ALL BEARING PADS SHALL HAVE A GRADE 50 DUROMETER HARDNESS.
2. STEEL PLATES IN ALL BEARING PADS SHALL CONFORM TO ASTM A709, GRADE 36 OR ASTM A570, GRADE 36.
3. ANCHOR BOLTS SHALL NOT BE SET UNTIL AFTER GIRDERS HAVE BEEN ERECTED AND SLAB HAS BEEN COMPLETELY PLACED.
4. ANCHOR BOLTS SHALL BE CENTERED IN THE SLOTTED HOLE OF THE SOLE PLATE (BASED ON A TEMPERATURE OF 70° F).
5. PAYMENT FOR ANCHOR BOLTS, NUTS AND WASHERS SHALL BE INCLUDED IN THE CONTRACT UNIT PRICE FOR STRUCTURAL STEEL (CARBON).

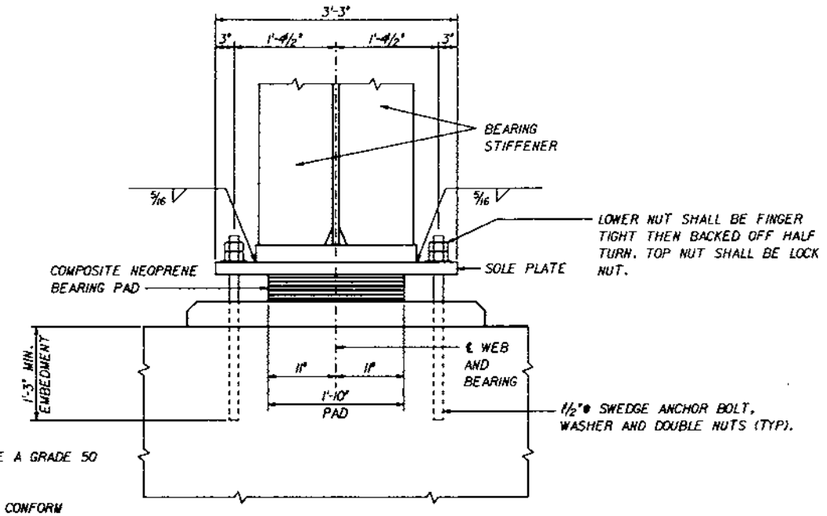

SECTION B-B

BEARING PAD REPLACEMENT NOTES

1. WHEN REPLACING ANY OR ALL OF THE BEARING PADS, ALL GIRDERS AT THE END BENT MUST BE LIFTED SIMULTANEOUSLY.
2. THE BRIDGE MAY REMAIN OPEN DURING JACKING OPERATIONS, BUT TRAFFIC SHALL BE RESTRICTED TO TRAVEL LANES.
3. JACKS SHALL BE PLACED ALONG THE ℄ OF THE END DIAPHRAGM AND ADJACENT TO THE CONCRETE PEDESTALS DIRECTLY UNDER THE W33x130 BEAM JACKING STIFFENERS.
4. JACKS SHALL BE CONNECTED THROUGH A CONSOLE TO PERMIT INDIVIDUAL ADJUSTMENT OF JACK PRESSURES TO PROVIDE EQUAL STROKE IN ALL JACKS. JACKING SHALL BE LIMITED TO A ¼" MAXIMUM LIFT ABOVE THE TOP OF PAD
5. USE SHIM PLATES AS REQUIRED TO PROVIDE A LEVEL JACKING SURFACE, AND TO LIMIT BEARING STRESSES ON CONCRETE IN ACCORDANCE WITH AASHTO STANDARD SPECIFICATIONS. PLATES SHALL BE DESIGNED AND DIMENSIONED AT TIME OF JACKING.
6. FOR ANTICIPATED JACK REACTION SEE JACKING DATA TABLE.
7. JACKS SHALL BE EQUIPPED WITH A LOCKING RING WHICH WILL PREVENT MOVEMENT IN THE EVENT THAT HYDRAULIC PRESSURE IS LOST. ALSO, JACKS SHALL BE LOCKED OFF PRIOR TO REMOVAL OF ANY BEARING PAD.
8. THE JACKING EQUIPMENT AND BEARING PAD REPLACEMENT IS NOT PART OF THIS CONTRACT AND DOES NOT NEED TO BE PROVIDED BY THE CONTRACTOR, UNLESS IT IS REQUIRED TO REPLACE OR REPAIR DEFECTIVE MATERIALS OR TO CORRECT RELATED CONSTRUCTION PROBLEMS.

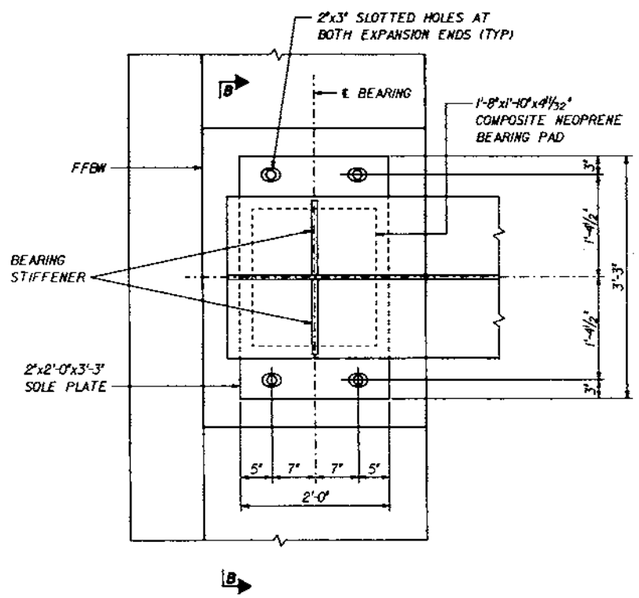

SECTION A-A

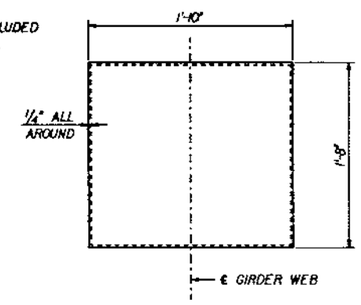

PLAN

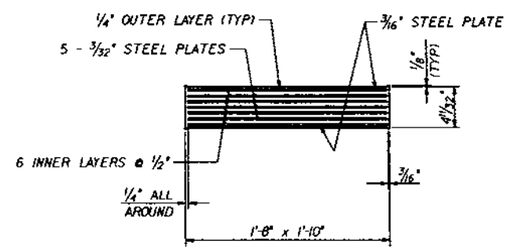

TYPICAL SECTION

NON-STANDARD COMPOSITE PAD
(NO. REQ'D - 20 UNITS TOTAL)

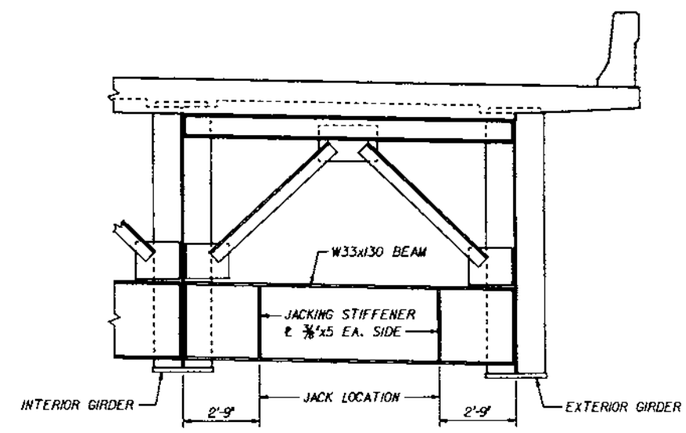

DETAIL - JACK LOCATIONS AT END DIAPHRAGM

JACKING DATA TABLE

LOCATION	NO. OF JACKS	UNFACTORED JACKING LOADS		
		DL (TONS)	LL+I (TONS)	MINIMUM JACK CAPACITY (TONS) EA.
END BENTS 1 & 2 (EXT. GDR)	4	190	78	268
END BENTS 1 & 2 (INT. GDR)	32	79	32	111

REVISIONS					
Date	By	Description	Date	By	Description

	Names	Dates
Drawn by	DCW	10/97
Checked by	MH	10/97
Designed by	MH	10/97
Checked by	ADS	10/97
Approved by	MARK S. EICHOLTZ	

ENGINEER OF RECORD:
URS Greiner, Inc.
P.O. BOX 31646, 7440 WEST COURTNEY CAMPBELL CAUSEWAY
TAMPA, FLORIDA 33607-1462

LOGO: URS Greiner

SEAL: Mark S. Eicholtz 3/2/98

FLORIDA DEPARTMENT OF TRANSPORTATION
STRUCTURES DESIGN OFFICE

ROAD NO.	COUNTY	PROJECT NO.
SR 414	SEMINOLE	77002-3505

SHEET TITLE: BEARING DETAILS

PROJECT NAME: S.R. 414 OVER S.R. 434

Drawing No.

Index No.

$IMDIAG: MAITLAN"-"DD.FG BBRGWB01.FGB
FORMHOLT
PLOTTED: 27FEB98-10:47 JO

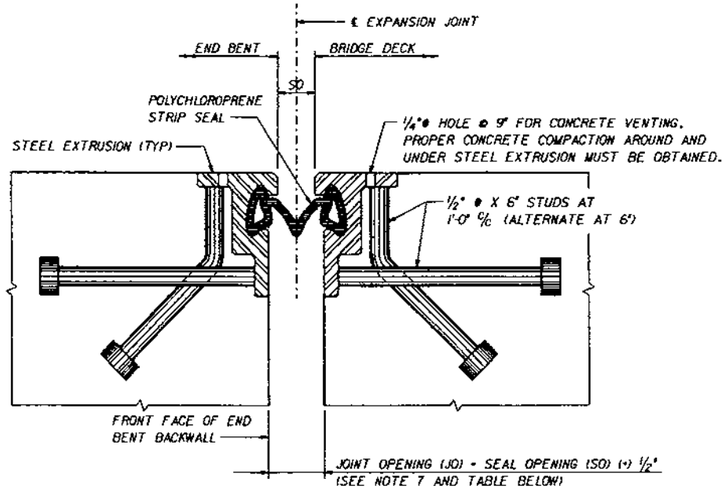

SECTION THRU JOINT AT END BENT

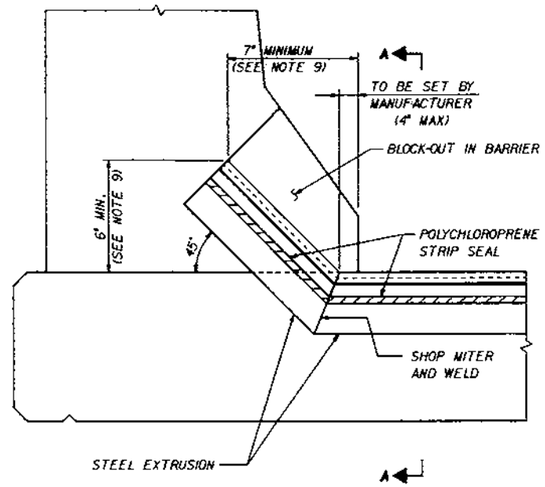

SECTION AT GUTTER

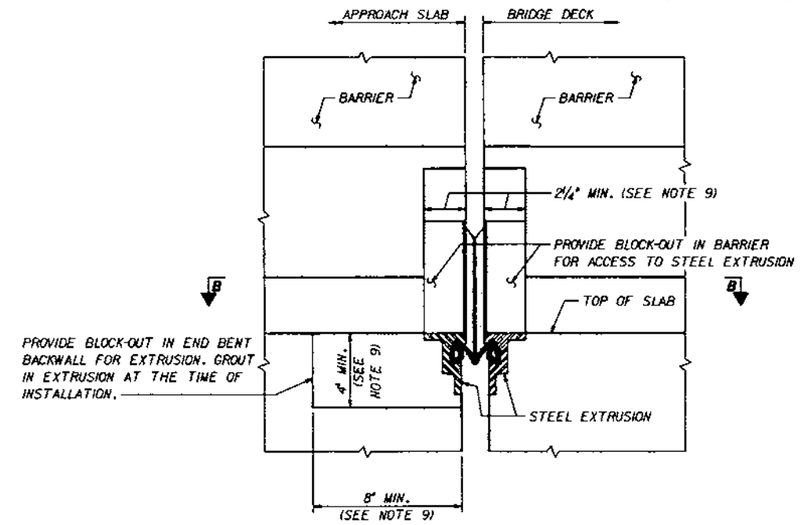

SECTION A-A

ELASTOMERIC STRIP SEAL DATA

LOCATION	SEAL CRITERIA		SEAL OPENING					TOTAL LENGTH OF SEAL (FEET)
	OPENING RANGE		SO AT 70° F	TEMP. ADJUST. (IN./10° F)	MIN. REQ'D. SEAL MOVEMENT	SKEW ANGLE		
	MINIMUM	MAXIMUM				@LT	@RT	
END BENT 1	1 3/8"	2 1/8"	1 3/4"	1/8"	3"	-	-	114.0
END BENT 2	1 3/8"	2 1/8"	1 3/4"	1/8"	3"	-	-	114.0

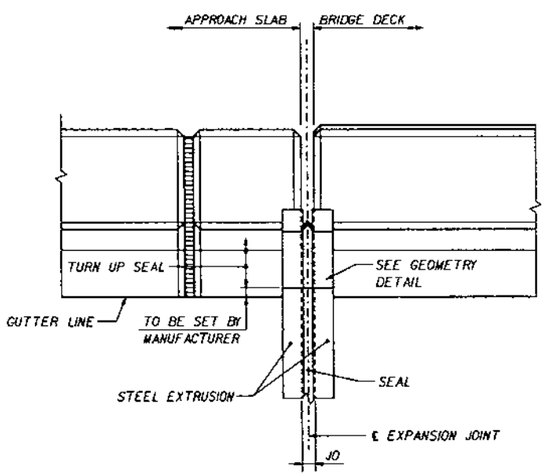

SECTION B-B

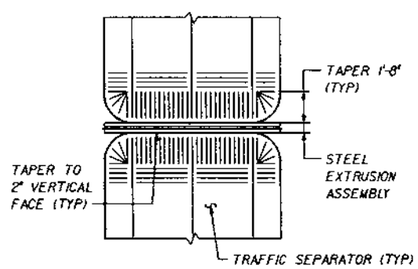

DETAIL C - JOINT AT MEDIAN TRAFFIC SEPARATOR
(PLAN VIEW)

ELASTOMERIC STRIP SEAL NOTES

1. THE COST OF ALL LABOR AND MATERIALS REQUIRED FOR THE CONSTRUCTION OF THE STRIP SEAL JOINTS IN THE BRIDGE DECK AND APPROACH SLAB SHALL BE INCLUDED IN THE CONTRACT UNIT PRICE FOR EXPANSION JOINT SEAL (STRIP ELASTOMERIC) ITEM NO. 460-7-4. QUANTITIES PROVIDED IN THE TABLE ARE LINEAR FEET OF EXPANSION JOINT SEAL MEASURED ALONG CENTERLINE OF JOINT FROM GUTTER LINE TO GUTTER LINE. THE COST OF PROVIDING THE MITERED AND UPTURN SECTIONS OF THE SEAL OUTSIDE OF THE GUTTER LINE SHALL BE INCLUDED IN THE CONTRACT UNIT PRICE.

2. THE STRIP SEALS FURNISHED SHALL:
   A. BE A HEAVY DUTY BRIDGE SEAL.
   B. ACCOMMODATE THE SIZE SHOWN.
   C. PERFORM SATISFACTORILY FOR THE SEAL OPENING RANGE SHOWN.

3. ALL STRUCTURAL STEEL FOR THE EXPANSION ASSEMBLY SHALL BE ASTM A709, GRADE 36.

4. AFTER ALL SHOP WELDING OPERATIONS HAVE BEEN COMPLETED, THE ASSEMBLY SHALL BE HOT-DIPPED GALVANIZED IN ACCORDANCE WITH ASTM DESIGN SPECIFICATION A-123. THE GALVANIZED ASSEMBLY SHALL BE PROTECTED DURING DECK SCREEDING OPERATIONS. FIELD WELDED BUTT SPLICES AND DAMAGED COATING SECTIONS SHALL BE COATED AS SPECIFIED IN SECTION 562 (ZINC PAINT COATING) OF THE SPECIFICATIONS.

5. THE CONTRACTOR SHALL SUBMIT SHOP DRAWINGS SHOWING:
   A. ALL DECK JOINT MATERIALS.
   B. PROPOSED METHOD OF INSTALLATION.
   C. SEAL SIZE, MANUFACTURER AND MODEL NUMBER.
   D. ASSEMBLY WITH ALL SIZES AND DIMENSIONS SHOWN.

6. THE STRIP SEAL SHALL BE CONTINUOUS FROM GUTTER TO GUTTER AND INSTALLED IN ACCORDANCE WITH THE MANUFACTURER'S RECOMMENDATIONS.

7. TEMPERATURE ADJUSTMENT: FOR JOINT CONSTRUCTION AT TEMPERATURES OTHER THAN 70° F, ADJUST JOINT OPENING ACCORDING TO THE TEMPERATURE ADJUSTMENT SHOWN IN THE TABLE. FOR TEMPERATURES ABOVE 70° F DIMINISH OPENING AND FOR TEMPERATURES BELOW 70° F INCREASE OPENING.

8. CONTRACTOR SHALL VERIFY THE TEMPERATURE ADJUSTMENT PRIOR TO THE PLACEMENT OF THE CONCRETE.

9. DIMENSIONS SHALL BE ADJUSTED FOR TYPE OF STEEL EXTRUSION SELECTED.

10. STEEL EXTRUSIONS SHALL BE SHIPPED IN MAXIMUM 50 FT. LENGTHS. ALL BUTT SPLICES SHALL BE PERFORMED BY THE CONTRACTOR IN THE FIELD. WELDING LOCATION (FIELD OR SHOP) SHALL BE SUBJECT TO APPROVAL BY THE ENGINEER. REMOVE AND CLEAN ALL BURRS, PARTICLES AND DUST AFTER MAKING A SPLICE.

11. ALL ANCHOR STUDS SHALL BE ASTM A108 STEEL, ELECTRIC ARC END-WELDED WITH COMPLETE FUSION. ALTERNATE TYPES OF ANCHOR STUDS MAY BE PERMITTED SUBJECT TO APPROVAL BY THE ENGINEER.

12. EXPANSION JOINTS SHALL FOLLOW BRIDGE SLOPE AND GEOMETRY. ALL ASSEMBLIES SHALL BE PIECE-MARKED.

13. ALL WELDING SHALL BE IN ACCORDANCE WITH THE CURRENT BRIDGE WELDING CODE ANSI/AASHTO/AWS D1.5-95 AND THE LATEST REVISIONS AND AASHTO ADDENDA.

14. CONTRACTOR MAY USE A JOINT SYSTEM FROM THE THREE LISTED BELOW. ALTERNATE JOINTS MAY BE APPROVED BY THE ENGINEER IF THEY MEET ALL THE REQUIREMENTS IN THIS SHEET. ANY JOINT PROPOSED THAT HAS A POOR PERFORMANCE RECORD, AS JUDGED SOLEY BY THE FDOT, REGARDLESS OF OTHERWISE MEETING THE CRITERIA SHOWN HEREIN, WILL BE REJECTED FOR USE.

MANUFACTURER:	STEEL EXTRUSION:	STRIP SEAL:
D.S. BROWN	SSCM2	A2R
WATSON BOWMAN ACME	M	SE-300
STRUCTURAL ACCESSORIES	CC	ONFLEX 40SS

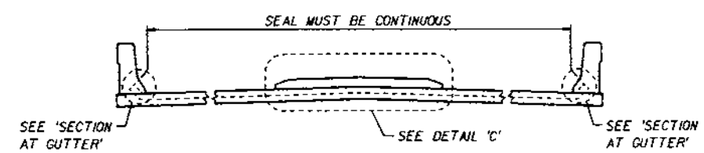

DECK WITH MEDIAN TRAFFIC SEPARATOR

REVISIONS					
Date	By	Description	Date	By	Description

	Names	Dates
Drawn by	DCW	10/97
Checked by	MH	10/97
Designed by	MH	10/97
Checked by	MSE	10/97
Approved by	MARK S. EICHOLTZ	

ENGINEER OF RECORD:
URS Greiner, Inc.
P.O. BOX 31646, 7440 WEST COURTNEY CAMPBELL CAUSEWAY
TAMPA, FLORIDA 33607-1462

LOGO: URS Greiner

SEAL: Mark S. Eicholtz 3/2/98

FLORIDA DEPARTMENT OF TRANSPORTATION
STRUCTURES DESIGN OFFICE

ROAD NO.	COUNTY	PROJECT NO.
SR 414	SEMINOLE	77002-3505

SHEET TITLE: EXPANSION JOINT DETAILS

PROJECT NAME: S.R. 414 OVER S.R. 434

Drawing No.

Index No.

PLOTTED: 16JAN98-15:38:50

$IDIAG: WAITLAND,CADD,FG BEXPMB01.FGB1

MARK SIZE	MARK DES	LENGTH FT IN	NO BARS	TYP BAR	STY A G	B FT IN FR	C FT IN FR	D FT IN FR	E FT IN FR	F FT IN FR	H FT IN FR	J FT IN	K FT IN	N NO	O ANG
LOCATION END BENT 1 AND 2										NO. REQUIRED = 2					
5	E1	10- 8	356	4	4 4	2- 5	2- 5								
5	E2	9- 4	26	5		2- 5	3- 6	0- 6	0- 6						
8	E3A	47- 3	8	1		47- 3									
8	E3B	31- 7	4	1		31- 7									
8	E4	9- 2	60	11		6- 6	1- 4	1- 4							
6	E5A	46- 8	8	1		46- 8									
6	E5B	30- 7	4	1		30- 7									
8	E6A	48- 2	14	1		48- 2									
8	E6B	33- 5	7	1		33- 5									
6	E7	4- 1	500	1		4- 1									
6	E8	10- 1	500	1		10- 1									
4	E9A	38- 8	44	1		38- 8									
4	E9B	41- 7	22	1		41- 7									
4	E10	3- 8	44	1		3- 8									
4	E11	11- 1	4	1		11- 1									
6	E12	1- 6	29	1		1- 6									
4	E13	5- 5	12	1		5- 5									
4	E14	3-10	10	1		3-10									
4	E15	8- 4	8	11		3- 6	2- 5	2- 5							
4	E16	9- 0	2	1		9- 0									
6	E17	11- 1	8	1		11- 1									
4	E18	10- 4	6	1		10- 4									
4	E19	3-10	20	1		3-10									
4	E20	3- 6	4	1		3- 6									
5	P	5- 6	4	SEE BENDING DIAGRAMS. SHEET B-5.											
5	V	5- 1	4	SEE BENDING DIAGRAMS. SHEET B-5.											
4	E23	3- 7	4	4	4 4	0-11	0- 6								
4	E24	1- 6	16	11		0- 6	0- 6	0- 6							
4	E25	4- 8	70	10		3- 6	1- 2								
4	E26	3- 6	60	1		3- 6									
4	E27	3- 0	2	1		3- 0									
LOCATION SUPERSTRUCTURE (SPAN 1)										NO. REQUIRED = 1					
5	S1	121- 2	588	41		54-10	11- 6	54-10				2- 2		2	
5	S2	253-8	145	2		2- 2	245- 0							4	
5	S3	119- 0	588	41		59- 6	59- 6					2- 2		1	
4	S4	253- 9	118	2		1- 9	245- 0							5	
4	S5	1- 9	328	32		0- 9	0- 6	0- 6							
4	S6	17-10	164	1		17-10									
4	S7	253- 9	13	2		1- 9	245- 0							5	
5	S8	9-10	90	1		9-10									
4	S9	7- 4	180	25		0-10	1- 8	0-10	0-10	3- 8					

END OF LIST

MSE RETAINING WALL GENERAL NOTES

1. **CONSTRUCTION SPECIFICATIONS:**
   FLORIDA DEPARTMENT OF TRANSPORTATION, "STANDARD SPECIFICATIONS FOR ROAD AND BRIDGE CONSTRUCTION", DATED 1991 AND SUPPLEMENTS THERETO.

2. **DESIGN SPECIFICATIONS:**
   DESIGN IN ACCORDANCE WITH THE 1996 SIXTEENTH EDITION OF THE AASHTO "STANDARD SPECIFICATIONS FOR HIGHWAY BRIDGES", AND THE FLORIDA DEPARTMENT OF TRANSPORTATION, "STRUCTURES DESIGN GUIDELINES", WITH REVISIONS THROUGH JULY 1, 1997.

3. DESIGN IS ALSO IN ACCORDANCE WITH AASHTO-AGC-ARTBA TASK FORCE 27 "IN SITU SOIL IMPROVEMENT TECHNIQUES", DATED JANUARY 1990.

4. **MATERIAL STRESSES:**
   ALL ALLOWABLE STRESSES ARE IN ACCORDANCE WITH CURRENT AASHTO STANDARD SPECIFICATIONS FOR ALL THE MATERIALS SHOWN ON PLANS.

   A. MAXIMUM CONCRETE STRESSES: CLASS III f'c = 5000 PSI MINIMUM.

   B. REINFORCING STEEL: ASTM, A615, GRADE 60.

5. **ENVIRONMENTAL CLASSIFICATION:** SLIGHTLY AGGRESSIVE.

6. **DESIGN METHOD:** LOAD FACTOR.

7. FOR TYPICAL SECTIONS THROUGH ROADWAY, SEE ROADWAY PLANS.

8. PROPRIETARY RETAINING WALLS, TRAFFIC RAILING BARRIER, COPING AND CONCRETE SLOPE PAVEMENT SHALL BE PAID FOR UNDER PAY ITEM NO. 528-70 ALT. AA REINFORCED EARTH WALL, OR 545-70 ALT. AB RETAINED EARTH WALLS, OR 549-70-215 ALT. AC HILFIKER MSE 5X5 PANEL WALL SYSTEM, SQ. FT. △

9. THE AREA OF PROPRIETARY RETAINING WALL TO BE USED FOR PAYMENT SHALL BE THE AREA BOUNDED BY THE TOP OF CONCRETE TRAFFIC RAILING BARRIER (OR TOP OF COPING IN AREAS WITHOUT TRAFFIC RAILING BARRIER), THE PROPOSED GROUND LINE AT FRONT FACE OF WALL AND THE BEGINNING AND END WALL LIMITS AS SHOWN. THE COST OF ALL FOUNDATIONS, FILL MATERIAL AND EXCAVATION (REQUIRED SPECIFICALLY FOR WALL CONSTRUCTION OUTSIDE OF ROADWAY CROSS-SECTION TEMPLATE) AND WALLS BELOW THE PROPOSED GROUND LINE SHALL BE INCLUDED IN THE UNIT COST FOR RETAINING WALLS ITEM NO. 528-70, 545-70 OR 549-70-215. △

10. RETAINING WALL PANEL SURFACE FINISH SHALL BE A 2" RAISED SURFACE.

11. THE RETAINING WALL, COPING AND TRAFFIC RAILING BARRIER ON TOP OF RETAINING WALL SHALL RECEIVE A "CLASS 5 APPLIED FINISH COATING (DEMACO LIGHT TAN #2 COLOR). ALL RETAINING WALL AREAS SHALL RECIEVE AN ANTI-GRAFFITI COATING. THE AREA OF WALL TO RECIEVE THE ANTI-GRAFFITI COATING SHALL BE THE AREA BOUNDED BY THE TOP OF THE CONCRETE TRAFFIC RAILING BARRIER (OR TOP OF COPING IN AREAS WITHOUT A TRAFFIC RAILING BARRIER), THE PROPOSED GROUND LINE AT THE FACE OF WALL AND THE BEGINNING AND END LIMITS OF THE WALL. THE COST OF THE ANTI-GRAFFITI COATING SHALL BE PAID FOR UNDER PAY ITEM 563-2 COATING CONCRETE SURFACE.

12. PILES WITHIN THE PROPRIETARY WALL EARTH VOLUME SHALL BE DRIVEN PRIOR TO CONSTRUCTION OF THE PROPRIETARY RETAINING WALL. THE PILES SHALL HAVE A BITUMEN COATING IN ACCORDANCE WITH SECTION 459 OF THE SPECIFICATIONS. PAYMENT FOR BITUMEN COATING ON CONCRETE PILES SHALL BE MADE UNDER ITEM NO. 459-70.

13. PRIOR TO MSE WALL CONSTRUCTION, THE ENTIRE PLAN AREA FOR THE WALL AND REINFORCEMENTS SHOULD BE COMPACTED IN ACCORDANCE WITH SPECIFICATION C455-8 TO LIMIT SETTLEMENT.

14. THESE WALLS SHALL BE DESIGNED TO ACCOMMODATE AN ANTICIPATED TOTAL SETTLEMENT OF 1½" TO 2". THE DIFFERENTIAL SETTLEMENT IS ANTICIPATED TO BE LESS THEN 1" OVER 50'.

15. LEVELING PAD SHALL BE 1'-6" MINIMUM BELOW PROPOSED GROUND LINE.

16. LONGITUDINAL DIMENSIONS SHOWN ARE MEASURED ALONG FRONT FACE OF RETAINING WALL.

17. THE WALL ALTERNATE BID SHALL BE THE ALTERNATE BUILT. NO SUBSTITUTION OF OTHER WALL COMPANIES SHALL BE ALLOWED.

18. **EXISTING UTILITIES :**
    EXISTING UTILITIES ARE IN THE APPROXIMATE LOCATIONS SHOWN ON THE DRAWINGS. THE CONTRACTOR SHALL VERIFY THE LOCATIONS OF EXISTING UTILITIES AS REQUIRED FOR CONSTRUCTION. SEE ROADWAY PLANS AND/OR APPROPRIATE UTILITY AUTHORITY FOR EXACT LOCATIONS. FOR RELOCATION OF EXISTING 14" FORCE MAIN, SEE UTILITY RELOCATION SHEETS SPN 77002-6502.

19. **PROPOSED UTILITIES :**
    PROPOSED UTILITIES ARE IN THE APPROXIMATE LOCATIONS SHOWN ON THE DRAWINGS AND SHALL BE VERIFIED BY THE CONTRACTOR AS REQUIRED FOR CONSTRUCTION. SEE ROADWAY, SIGNALIZATION, AND LIGHTING PLANS FOR ADDITIONAL INFORMATION AND COMPLETE LAYOUT OF ALL UTILITIES.

MSE RETAINING WALL GENERAL NOTES (CONTINUED)

20. WALL CRITERIA AND MINIMUM SAFETY FACTORS.

    OVERTURNING = 2.0
    SLIDING = 1.5
    BEARING CAPACITY = 2.5
    INTERNAL PULLOUT = 1.5 (ALLOWABLE DEFORMATION 0.75 INCHES)
    OVERALL STABILITY = 1.5
    STEEL SOIL REINFORCEMENT (BARS AND STRAPS) = .55 Fy AT END OF DESIGN LIFE, AND 0.50 Fu AT NET SECTION OF BOLTED CONNECTION
    STEEL SOIL REINFORCEMENT (GRIDS AND BAR MATS) = 0.47 Fy AT END OF DESIGN LIFE
    STEEL CONNECTION = SEE AASHTO SPECIFICATIONS
    MAXIMUM PULLOUT FACTORS:
    RIBBED STRIPS, fx MAX = 1.5
    GRIDS AND BAR MATS, Npmax = 3.0

21. SOIL REINFORCEMENT LENGTHS FOR EXTERNAL STABILITY SHALL BE AS FOLLOWS:

	H_W (FEET)	<9	10	13	15	20	25	30*
WALL	** MINIMUM L_S (FEET)	9	9	9	11	14	18	21
W-1	BEARING PRESSURE (KSF)	3	3	3	3.7	4.7	5	5
WALL	** MINIMUM L_S (FEET)	9	10	14	14	17	21	25
W-2	BEARING PRESSURE (KSF)	1.5	1.7	2.4	2.4	2.8	3.5	4.2

H_W = HEIGHT OF RETAINED SOIL.
L_S = LENGTH OF REINFORCING STRAP.

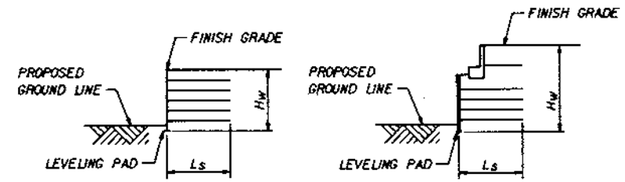

* INCLUDES SECTION BENEATH ABUTMENTS

** THE REINFORCEMENT STRAP LENGTHS SHOWN IN THIS COLUMN ARE THE MINIMUM LENGTHS REQUIRED FOR EXTERNAL STABILITY. THE PROPRIETARY WALL COMPANIES ARE RESPONSIBLE FOR INTERNAL STABILITY OF THE RETAINING WALLS. THE REINFORCEMENT LENGTHS USED IN THE CONSTRUCTION OF THE RETAINING WALLS SHALL BE THE LONGER OF THAT REQUIRED FOR INTERNAL OR EXTERNAL STABILITY. SEE CHAPTER 18 OF THE STRUCTURES DESIGN GUIDELINES FOR ADDITIONAL INFORMATION. WALL HEIGHT (H_W) SHOWN IS THE DISTANCE MEASURED FROM THE FINISH GRADE ELEVATION TO THE TOP OF THE LEVELING PAD. CONTRACTOR MAY USE LINEAR INTERPOLATION BETWEEN STRAP LENGTHS FOR WALL HEIGHTS NOT SHOWN IN TABLE.

22. DESIGN BASED ϕ = 30° (ASSUMED SAND BACKFILL)

23. MSE WALL SOIL PARAMETERS:

	REINFORCED SOIL	RANDOM BACKFILL	FOUNDATION SOIL PROPERTIES FOR WALL DESIGN
SOIL TYPE	SP	SP/SP-SM	SP/SP-SM
UNIT WEIGHT LBS/CU.FT.	105 (MOIST)	110 (SATURATED)	110 (SATURATED)
COHESION LBS/CU.FT.	0	0	0
INTERNAL FRICTION	30°	30°	32°

24. IF THE UNIT WEIGHT OF THE FILL PROPOSED BY THE CONTRACTOR DIFFERS FROM THE ABOVE, THE PROJECT ENGINEER SHALL CONTACT BOTH THE DISTRICT GEOTECHNICAL ENGINEER AND WALL DESIGNER FOR A POSSIBLE REDESIGN.

25. THE REINFORCING STRAPS AND FASTENERS FOR THE END BENT BACKWALL SHALL BE DESIGNED AND FURNISHED BY THE MSE WALL COMPANY. THE STRAPS SHALL BE DESIGNED TO RESIST THE HORIZONTAL LOAD SHOWN ON INDIVIDUAL END BENT DRAWINGS. THE COST OF THE STRAPS AND FASTENERS SHALL BE INCLUDED IN THE COST OF THE MSE WALLS. INSTALLATION SHALL BE BY THE BRIDGE CONTRACTOR.

26. MSE WALL STRAP/MESH SHALL BE PLACED TO AVOID CONFLICT WITH THE END BENT PILES AND CAP. A STRUCTURAL EXTENSION OF THE CONNECTION OF THE WALL PANEL TO THE SOIL REINFORCEMENT SHALL BE USED WHENEVER NECESSARY TO AVOID THE CUTTING OR EXCESSIVE SKEWING (GREATER THAN 15 DEGREES) OF THE SOIL REINFORCEMENTS AT PILES. SEE FOUNDATION LAYOUT SHEETS OF EACH STRUCTURE FOR LOCATION OF PILES.

ESTIMATED QUANTITIES

ITEM	UNIT	RETAINING WALL	ANTI-GRAFFITI COATING
RETAINING WALL W-1	AREA (SQ. FT)	26,401	26,401
RETAINING WALL W-2		31,091	31,091
TOTAL		57,492	57,492

REVISIONS					
Date	By	Description	Date	By	Description
4/23/98	MSE	△ ADDED HILFIKER WALL PAY ITEM NO. TO NOTES			

	Names	Dates
Drawn by	JB	8/97
Checked by	MSE	8/97
Designed by	MSE	8/97
Checked by	ADS	8/97
Approved by	MARK S. EICHOLTZ	

ENGINEER OF RECORD:
URS Greiner, Inc.
P.O. BOX 3266, 7440 WEST COURTNEY CAMPBELL CAUSEWAY
TAMPA, FLORIDA 33607-1462

LOGO: URS Greiner

SEAL: Mark S. Eicholtz 4/23/98

FLORIDA DEPARTMENT OF TRANSPORTATION
STRUCTURES DESIGN OFFICE

ROAD NO.	COUNTY	PROJECT NO.
SR 414	SEMINOLE	77002-3505

SHEET TITLE: RETAINING WALL GENERAL NOTES (1)

PROJECT NAME: S.R. 414 OVER S.R. 434

Drawing No.

Index No.

$IDAG: MATTLAND.CADD.FG BRTWW801.FGB
FRAMMATT
PLOTTED: 22APR98-11:00:30

FED. ROAD DIV. NO.	STATE	PROJECT NO.	FISCAL YEAR	SHEET NO.
3	FLA.	—		W-2

RETAINING WALL SHOP DRAWING REQUIREMENTS

THE SUCCESSFUL BIDDER SHALL SUBMIT THE FINAL DESIGN FOR THE RETAINING WALL ALTERNATE BID FOR REVIEW AS SHOP DRAWINGS. THE SHOP DRAWINGS SHALL INCLUDE DETAILED DESIGN COMPUTATIONS AND ALL DETAILS, DIMENSIONS AND QUANTITIES NECESSARY TO CONSTRUCT THE WALL. THE FULLY DETAILED PLANS SHALL BE PREPARED TO DEPARTMENT STANDARDS AND SHALL INCLUDE, BUT NOT BE LIMITED TO, THE FOLLOWING:

A. PLAN AND ELEVATION SHEETS

1. AN ELEVATION VIEW OF THE WALL INDICATING ELEVATIONS AT TOP OF WALL AT BEGINNING AND END WALL STATIONS, ALL BREAKS IN VERTICAL ALIGNMENTS, ELEVATIONS AT WHOLE STATIONS AND +25' INCREMENTS, ELEVATIONS AT TOP OF LEVELING PAD, LOCATIONS OF ALL STEPS IN LEVELING PAD, PANEL DESIGNATION, LENGTH, SIZE AND SOIL REINFORCEMENT DESIGNATION SHALL BE SHOWN. THE LOCATION OF THE PROPOSED FINAL GROUND LINE SHALL BE INDICATED.

2. PLAN VIEW OF THE WALL SHALL REFLECT THE HORIZONTAL ALIGNMENT AND SHALL INDICATE THE OFFSET FROM THE HORIZONTAL CONTROL LINE TO THE FRONT FACE OF THE RETAINING WALL PANELS. ALL UTILITIES, SIGNS, LIGHTS, ETC. THAT EFFECT THE WALL SHALL BE SHOWN.

3. GENERAL NOTES, DESIGN PARAMETERS, SOIL CHARACTERISTICS, FACTORS OF SAFETY, ETC. SHALL BE SHOWN.

4. LIMITS OF REINFORCED SOIL VOLUME.

B. ALL DETAILS OF EACH PANEL INCORPORATED INTO THE WALL INCLUDING REINFORCING AND REINFORCING BAR BENDING DETAILS SHALL BE SHOWN.

C. ALL DETAILS FOR LEVELING PADS, INCLUDING STEP DETAILS AND ALLOWABLE AND ACTUAL MAXIMUM BEARING PRESSURES SHALL BE INDICATED.

D. ALL DETAILS FOR CONSTRUCTION OF WALL AROUND OBSTRUCTIONS SHALL BE SHOWN.

E. CONNECTIONS TO BARRIERS, COPINGS, SIGNS, LIGHTS, ETC., SHALL BE FULLY DETAILED.

F. FULLY DETAILED DESIGN COMPUTATIONS SHALL BE PROVIDED. THIS SHALL INCLUDE THE DESIGN OF THE SOIL REINFORCEMENT AT THE END BENTS.

G. THE PLANS AND CALCULATIONS SHALL BE SIGNED/SEALED BY A FLORIDA REGISTERED PROFESSIONAL ENGINEER.

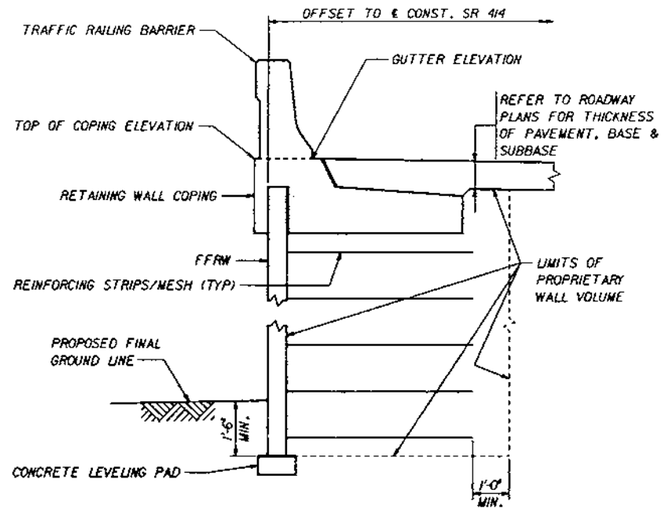

TYPICAL WALL SECTION WITH TRAFFIC RAILING BARRIER

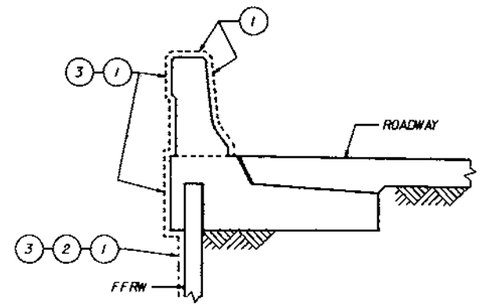

SURFACE FINISH DETAIL

(1) CLASS 5 APPLIED FINISH COATING. COLOR TO BE DEMACO LIGHT TAN #2.

(2) RETAINING WALL PANEL SURFACE FINISH SHALL BE A 2" RAISED SURFACE.

(3) CLEAR ANTI-GRAFFITI COATING.

SURFACE FINISH NOTES

1. FINISH IN ACCORDANCE WITH ARTICLE 400-15.2 OF THE SPECIFICATIONS UNLESS SHOWN OTHERWISE.

2. THE MATERIAL AND APPLICATION OF THE ANTI-GRAFFITI COATING SHALL CONFORM TO THE REQUIREMENTS OF SPECIFICATION 563.

REVISIONS					
Date	By	Description	Date	By	Description

	Names	Dates
Drawn by	JB	8/97
Checked by	MSE	8/97
Designed by	MSE	8/97
Checked by	ADS	8/97
Approved by	MARK S. EICHOLTZ	

ENGINEER OF RECORD:
URS Greiner, Inc.
P.O. BOX 3244, 7440 WEST
COURTNEY CAMPBELL CAUSEWAY
TAMPA, FLORIDA 33607-1462

LOGO: URS Greiner

SEAL: Mark S. Eicholtz 3/2/98

FLORIDA DEPARTMENT OF TRANSPORTATION
STRUCTURES DESIGN OFFICE

ROAD NO.	COUNTY	PROJECT NO.
SR 414	SEMINOLE	77002-3505

SHEET TITLE: RETAINING WALL GENERAL NOTES (2)

PROJECT NAME: S.R. 414 OVER S.R. 434

Drawing No.

Index No.

FRAMMAIT

PLOTTED: 28JAN98-07:44:30

$$DIAG$$ WATLAND.CADD.FG BRTWW806.FGBI

FED. ROAD DIV. NO.	STATE	PROJECT NO.	FISCAL YEAR	SHEET NO.
	FLA.			W-3

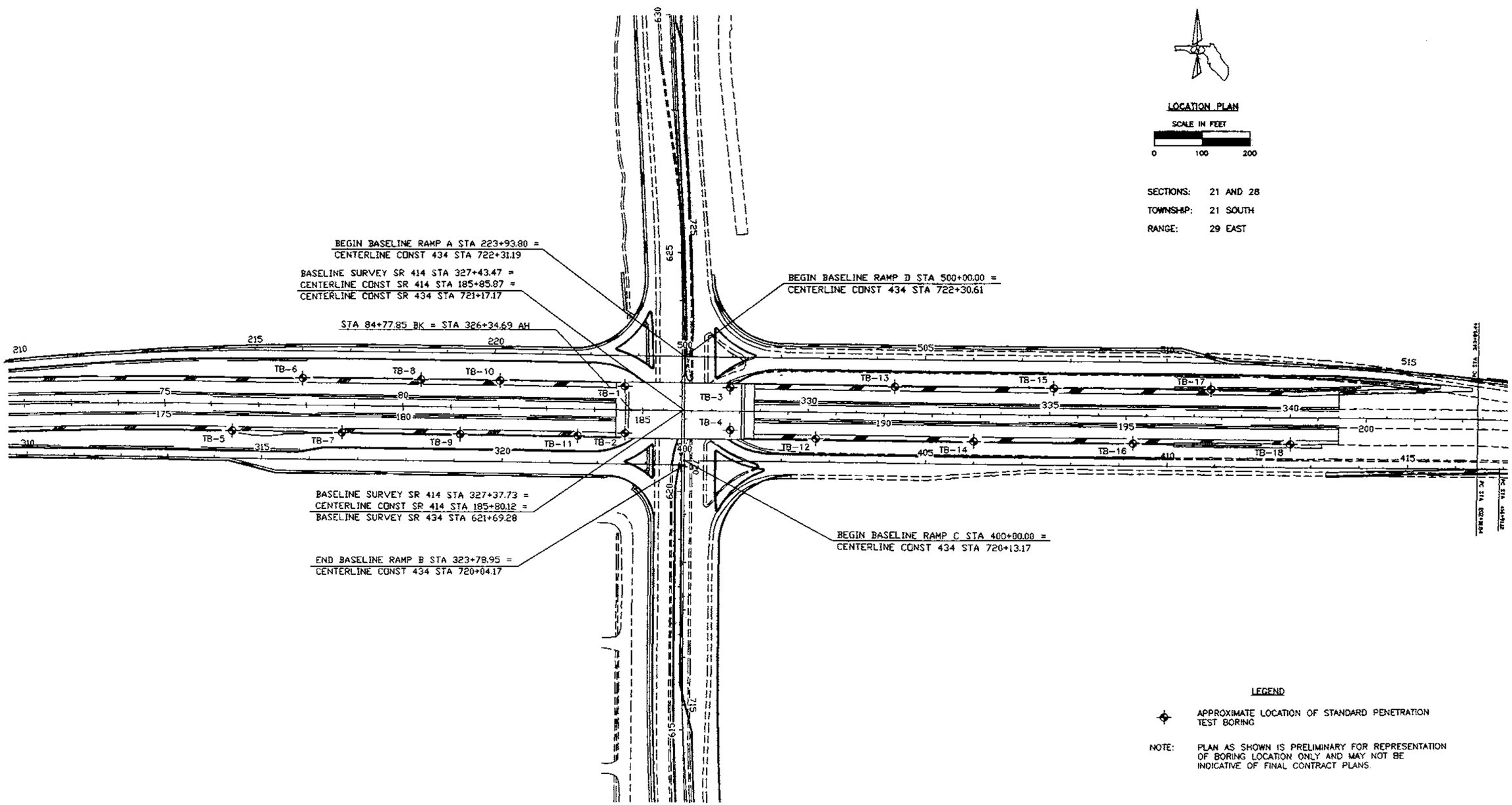

REVISIONS					
Date	By	Description	Date	By	Description

	Names	Dates
Drawn by	SW	1-15-98
Checked by	RA	1-15-98
Designed by	N/A	N/A
Checked by	N/A	N/A
Approved by	JAY W. CASPER, P.E.	

ENGINEER OF RECORD:
JAY W. CASPER, P.E. No. 36330
L.J. NODARSE & ASSOCIATES, INC.
1030 NORTH ORLANDO AVE.
WINTER PARK, FLORIDA

LOGO: Nodarse & Associates, Inc.

SEAL: 3/2/98

FLORIDA DEPARTMENT OF TRANSPORTATION
GEOTECHNICAL DESIGN OFFICE

ROAD NO.	COUNTY	PROJECT NO.
S.R. 414	SEMINOLE	77002-3505

SHEET TITLE: PLAN VIEW FOR SPT BORINGS

PROJECT NAME: S.R. 414 (MAITLAND BLVD.) INTERCHANGE AT S.R. 434
SEMINOLE COUNTY, FLORIDA

Drawing No.

Index No.

NODARSE AND ASSOC. No 96G-0409 FIGURE. 3

FED. ROAD DIV. NO.	STATE	PROJECT NO.	FISCAL YEAR	SHEET NO.
	FLA.			W-4

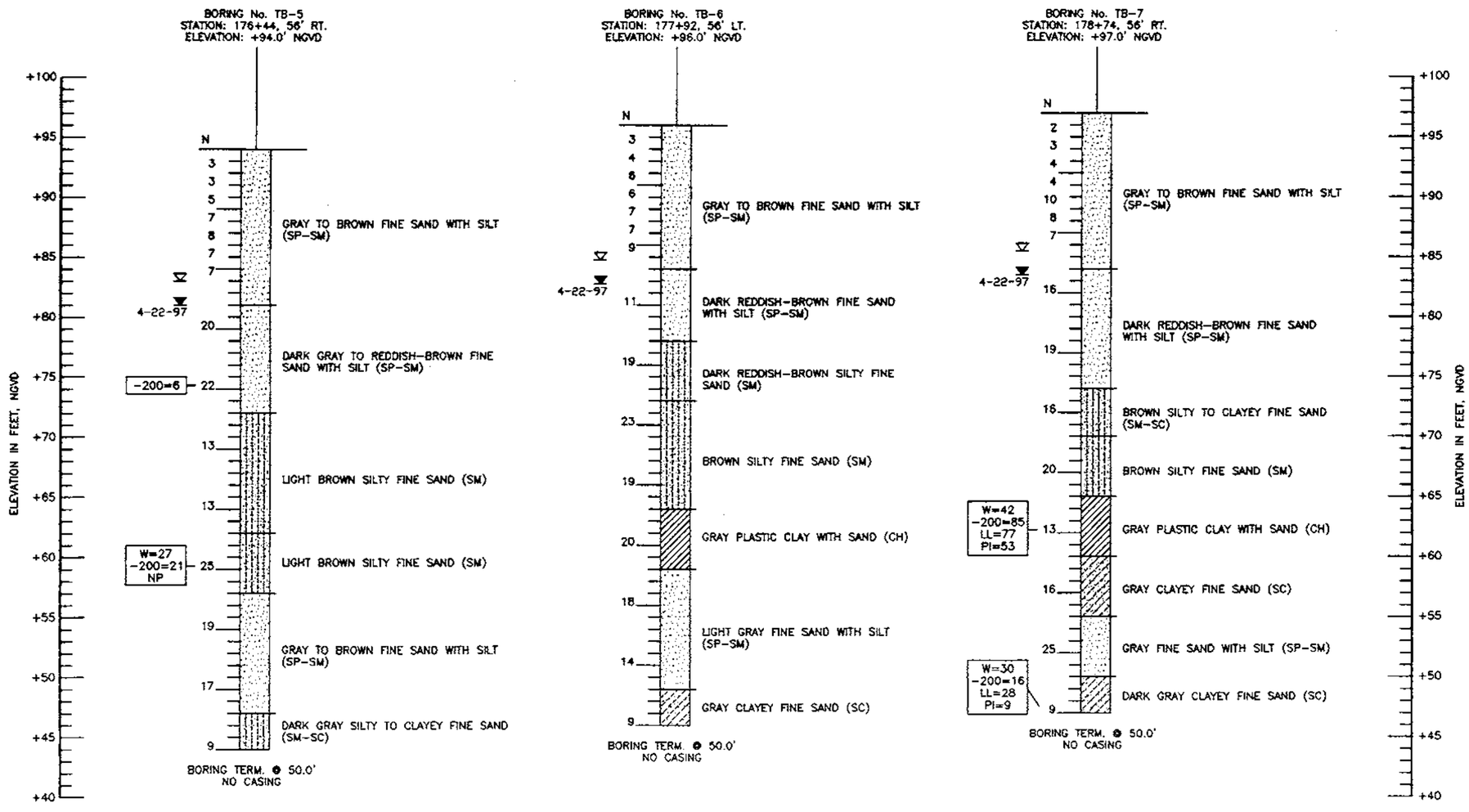

LEGEND

SAND
SILTY SAND
CLAYEY SAND
CLAY

(SP) UNIFIED SOIL CLASSIFICATION GROUP SYMBOL

4-22-97 ENCOUNTERED GROUNDWATER LEVEL (DATE OF READING)

ESTIMATED SEASONAL HIGH GROUNDWATER LEVEL

W=42	NATURAL MOISTURE CONTENT (%)
-200=85	FINES PASSING No. 200 SIEVE (%)
LL=77	LIQUID LIMIT
PI=53	PLASTICITY INDEX
NP	NON-PLASTIC MATERIAL

N STANDARD PENETRATION RESISTANCE IN BLOWS PER FOOT UNLESS OTHERWISE NOTED

STANDARD PENETRATION TEST DATA

SPOON INSIDE DIA.	1 3/8 IN.
SPOON OUTSIDE DIA.	2 IN.
ASTM STANDARD DROP SAFETY HAMMER (ROPE-CATHEAD)	
AVG. HAMMER DROP	30 IN.
HAMMER WEIGHT	140 LBS.

GRANULAR MATERIALS

RELATIVE DENSITY	SPT (BLOWS/FT.)
VERY LOOSE	LESS THAN 4
LOOSE	4-10
MEDIUM DENSE	10-30
DENSE	30-50
VERY DENSE	GREATER THAN 50

SILTS AND CLAYS

CONSISTENCY	SPT (BLOWS/FT.)
VERY SOFT	LESS THAN 2
SOFT	2-4
FIRM	4-8
STIFF	8-15
VERY STIFF	15-30
HARD	GREATER THAN 30

NOTES:

1) LAYER BOUNDARIES ARE APPROXIMATE AND MAY VARY BETWEEN OR AWAY FROM BORING LOCATIONS. SEE SECTION 120-3 OF THE STANDARD SPECIFICATIONS FOR MORE DETAILS.

2) BASED ON A REVIEW OF THE ST. JOHN'S RIVER WATER MANAGEMENT DISTRICT POTENTIOMETRIC MAPS OF THE UPPER FLORIDAN AQUIFER FOR THE PROJECT AREA, THE ESTIMATED ELEVATION OF THE ARTESIAN HEAD IS APPROXIMATELY +50 FEET, NGVD. THE CONTRACTOR SHALL BE PREPARED TO HANDLE ARTESIAN LEVELS UP TO ELEVATION +50 FEET, NGVD.

ENVIRONMENTAL CLASSIFICATION:

SUPERSTRUCTURE: N/A

SUBSTRUCTURE: STEEL: SLIGHTLY AGGRESSIVE
CONCRETE: SLIGHTLY AGGRESSIVE

REVISIONS					
Date	By	Description	Date	By	Description

	Names	Dates
Drawn by	SW	1-15-98
Checked by	RA	1-15-98
Designed by	N/A	N/A
Checked by	N/A	N/A
Approved by	JAY W. CASPER, P.E.	

ENGINEER OF RECORD:
JAY W. CASPER P.E. No. 36330
L.J. NODARSE & ASSOCIATES, INC.
1030 NORTH ORLANDO AVE.
WINTER PARK, FLORIDA

LOGO: Nodarse & Associates, Inc.

SEAL: 3/2/98

FLORIDA DEPARTMENT OF TRANSPORTATION
GEOTECHNICAL DESIGN OFFICE

ROAD NO.	COUNTY	PROJECT NO.
S.R. 414	SEMINOLE	77002-3505

SHEET TITLE: REPORT OF SPT BORINGS FOR WALLS

PROJECT NAME: S.R. 414 (MAITLAND BOULEVARD) INTERCHANGE AT S.R. 434
SEMINOLE COUNTY, FLORIDA

Drawing No.

Index No.

NODARSE AND ASSOC. No. 96G-0409 FIGURE: 6

FED. ROAD DIV. NO.	STATE	PROJECT NO.	FISCAL YEAR	SHEET NO.
	FLA.			W-5

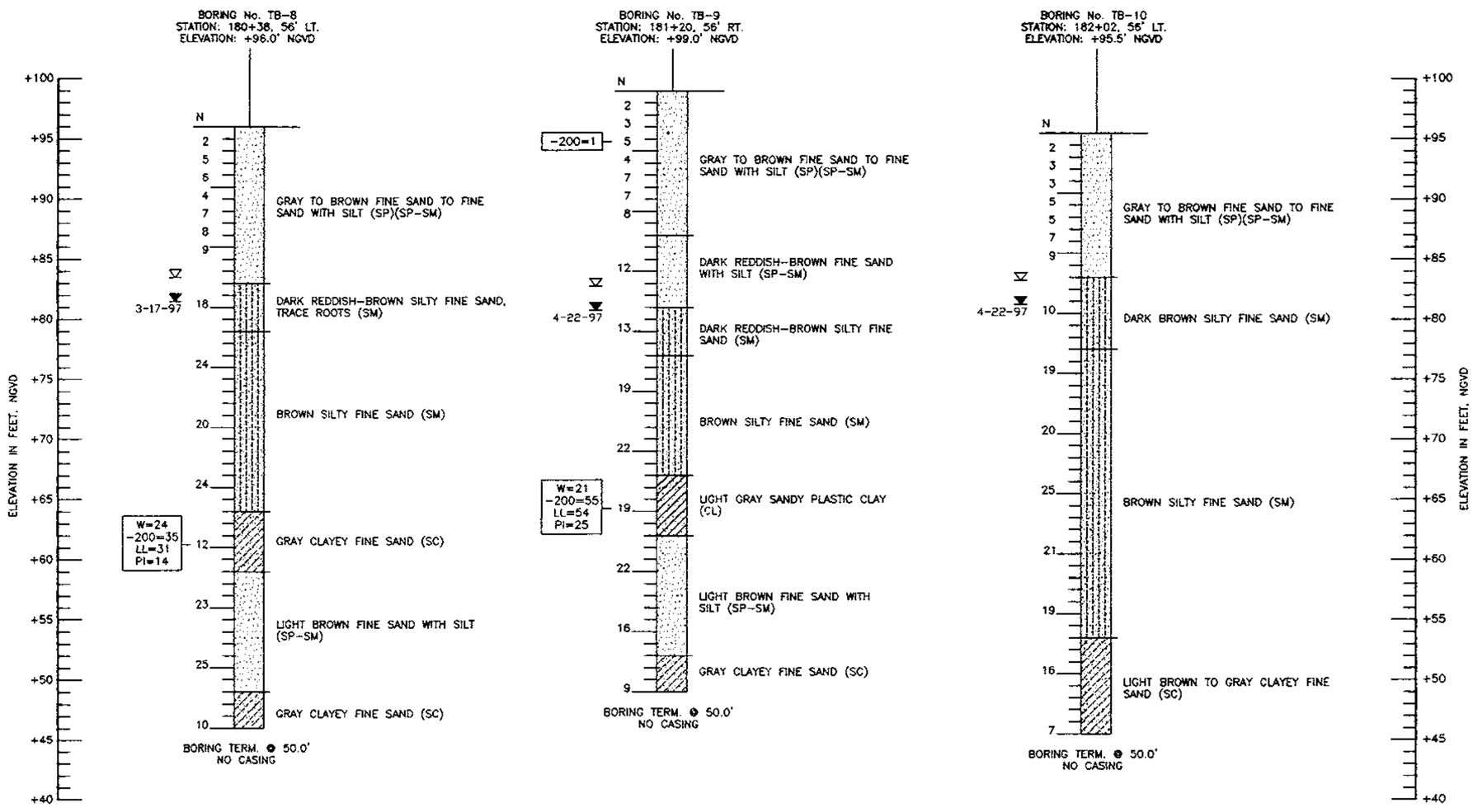

LEGEND

- SAND
- SILTY SAND
- CLAYEY SAND
- SANDY CLAY

(SP) UNIFIED SOIL CLASSIFICATION GROUP SYMBOL

4-22-97 ENCOUNTERED GROUNDWATER LEVEL (DATE OF READING)

ESTIMATED SEASONAL HIGH GROUNDWATER LEVEL

W=24 NATURAL MOISTURE CONTENT (%)
-200=35 FINES PASSING No. 200 SIEVE (%)
LL=31 LIQUID LIMIT
PI=14 PLASTICITY INDEX

N STANDARD PENETRATION RESISTANCE IN BLOWS PER FOOT UNLESS OTHERWISE NOTED

STANDARD PENETRATION TEST DATA

SPOON INSIDE DIA.	1 3/8 IN.
SPOON OUTSIDE DIA.	2 IN.
ASTM STANDARD DROP SAFETY HAMMER (ROPE-CATHEAD)	
AVG. HAMMER DROP	30 IN.
HAMMER WEIGHT	140 LBS.

GRANULAR MATERIALS

RELATIVE DENSITY	SPT (BLOWS/FT.)
VERY LOOSE	LESS THAN 4
LOOSE	4-10
MEDIUM DENSE	10-30
DENSE	30-50
VERY DENSE	GREATER THAN 50

SILTS AND CLAYS

CONSISTENCY	SPT (BLOWS/FT.)
VERY SOFT	LESS THAN 2
SOFT	2-4
FIRM	4-8
STIFF	8-15
VERY STIFF	15-30
HARD	GREATER THAN 30

NOTES:

1) LAYER BOUNDARIES ARE APPROXIMATE AND MAY VARY BETWEEN OR AWAY FROM BORING LOCATIONS. SEE SECTION 120-3 OF THE STANDARD SPECIFICATIONS FOR MORE DETAILS.

2) BASED ON A REVIEW OF THE ST. JOHN'S RIVER WATER MANAGEMENT DISTRICT POTENTIOMETRIC MAPS OF THE UPPER FLORIDAN AQUIFER FOR THE PROJECT AREA, THE ESTIMATED ELEVATION OF THE ARTESIAN HEAD IS APPROXIMATELY +50 FEET, NGVD. THE CONTRACTOR SHALL BE PREPARED TO HANDLE ARTESIAN LEVELS UP TO ELEVATION +50 FEET, NGVD.

ENVIRONMENTAL CLASSIFICATION:

SUPERSTRUCTURE: N/A

SUBSTRUCTURE: STEEL: SLIGHTLY AGGRESSIVE
CONCRETE: SLIGHTLY AGGRESSIVE

REVISIONS

Date	By	Description	Date	By	Description

	Names	Dates
Drawn by	SW	1-15-98
Checked by	RA	1-15-98
Designed by	N/A	N/A
Checked by	N/A	N/A
Approved by	JAY W. CASPER, P.E.	

ENGINEER OF RECORD:
JAY W. CASPER, P.E. No. 36330
L.J. NODARSE & ASSOCIATES, INC.
1030 NORTH ORLANDO AVE.
WINTER PARK, FLORIDA

LOGO: Nodarse & Associates, Inc.

SEAL: 3/2/98

FLORIDA DEPARTMENT OF TRANSPORTATION
GEOTECHNICAL DESIGN OFFICE

ROAD NO.	COUNTY	PROJECT NO.
S.R. 414	SEMINOLE	77002-3505

SHEET TITLE: REPORT OF SPT BORINGS FOR WALLS

PROJECT NAME: S.R. 414 (MAITLAND BOULEVARD) INTERCHANGE AT S.R. 434
SEMINOLE COUNTY, FLORIDA

Drawing No.

Index No.

NODARSE AND ASSOC. No. 96G-0409 FIGURE: 7

FED. ROAD DIV. NO.	STATE	PROJECT NO.	FISCAL YEAR	SHEET NO.
	FLA.			W-6

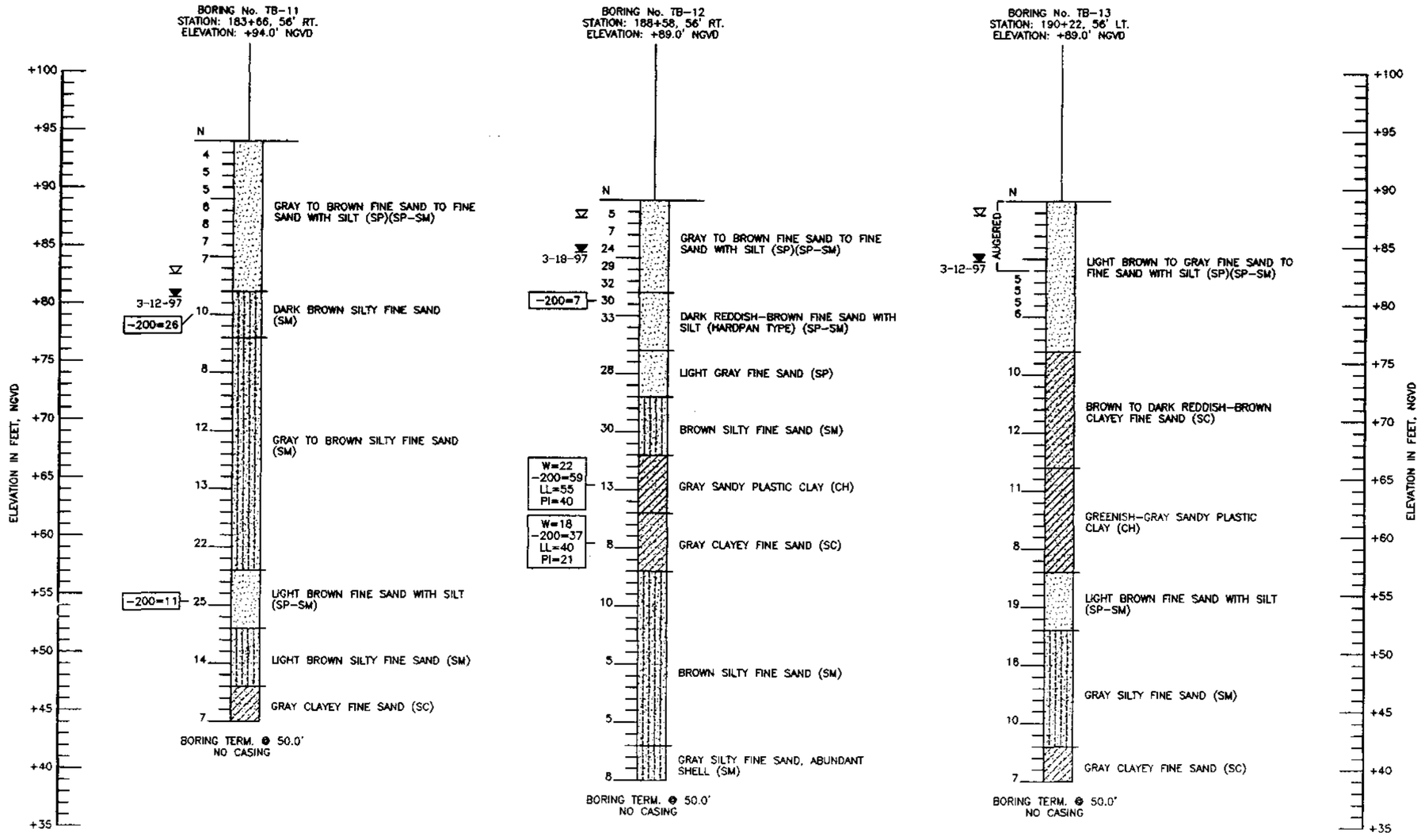

LEGEND

- SAND
- SILTY SAND
- CLAYEY SAND
- SANDY CLAY

(SP) UNIFIED SOIL CLASSIFICATION GROUP SYMBOL

3-12-97 ENCOUNTERED GROUNDWATER LEVEL (DATE OF READING)

ESTIMATED SEASONAL HIGH GROUNDWATER LEVEL

W=22	NATURAL MOISTURE CONTENT (%)
-200=59	FINES PASSING No. 200 SIEVE (%)
LL=55	LIQUID LIMIT
PI=40	PLASTICITY INDEX

N STANDARD PENETRATION RESISTANCE IN BLOWS PER FOOT UNLESS OTHERWISE NOTED

STANDARD PENETRATION TEST DATA

SPOON INSIDE DIA.	1 3/8 IN.
SPOON OUTSIDE DIA.	2 IN.
ASTM STANDARD DROP SAFETY HAMMER (ROPE-CATHEAD)	
AVG. HAMMER DROP	30 IN.
HAMMER WEIGHT	140 LBS.

GRANULAR MATERIALS

RELATIVE DENSITY	SPT (BLOWS/FT.)
VERY LOOSE	LESS THAN 4
LOOSE	4-10
MEDIUM DENSE	10-30
DENSE	30-50
VERY DENSE	GREATER THAN 50

SILTS AND CLAYS

CONSISTENCY	SPT (BLOWS/FT.)
VERY SOFT	LESS THAN 2
SOFT	2-4
FIRM	4-8
STIFF	8-15
VERY STIFF	15-30
HARD	GREATER THAN 30

NOTES:

1) LAYER BOUNDARIES ARE APPROXIMATE AND MAY VARY BETWEEN OR AWAY FROM BORING LOCATIONS. SEE SECTION 120-3 OF THE STANDARD SPECIFICATIONS FOR MORE DETAILS.

2) BASED ON A REVIEW OF THE ST. JOHN'S RIVER WATER MANAGEMENT DISTRICT POTENTIOMETRIC MAPS OF THE UPPER FLORIDAN AQUIFER FOR THE PROJECT AREA, THE ESTIMATED ELEVATION OF THE ARTESIAN HEAD IS APPROXIMATELY +50 FEET, NGVD. THE CONTRACTOR SHALL BE PREPARED TO HANDLE ARTESIAN LEVELS UP TO ELEVATION +50 FEET, NGVD.

ENVIRONMENTAL CLASSIFICATION:

SUPERSTRUCTURE: N/A

SUBSTRUCTURE: STEEL: SLIGHTLY AGGRESSIVE
CONCRETE: SLIGHTLY AGGRESSIVE

REVISIONS

Date	By	Description	Date	By	Description

	Names	Dates
Drawn by	SW	1-15-98
Checked by	RA	1-15-98
Designed by	N/A	N/A
Checked by	N/A	N/A
Approved by	JAY W. CASPER, P.E.	

ENGINEER OF RECORD:
JAY W. CASPER, P.E. No. 36330
L.J. NODARSE & ASSOCIATES, INC.
1030 NORTH ORLANDO AVE.
WINTER PARK, FLORIDA

LOGO: Nodarse & Associates, Inc.

SEAL: 3/2/98

FLORIDA DEPARTMENT OF TRANSPORTATION
GEOTECHNICAL DESIGN OFFICE

ROAD NO.	COUNTY	PROJECT NO.
S.R. 414	SEMINOLE	77002-3505

SHEET TITLE: REPORT OF SPT BORINGS FOR WALLS

PROJECT NAME: S.R. 414 (MAITLAND BOULEVARD) INTERCHANGE AT S.R. 434
SEMINOLE COUNTY, FLORIDA

Drawing No.

Index No

NODARSE AND ASSOC. No. 96G-0409 FIGURE: 8

FED. ROAD DIV. NO.	STATE	PROJECT NO.	FISCAL YEAR	SHEET NO.
	FLA.			W-7

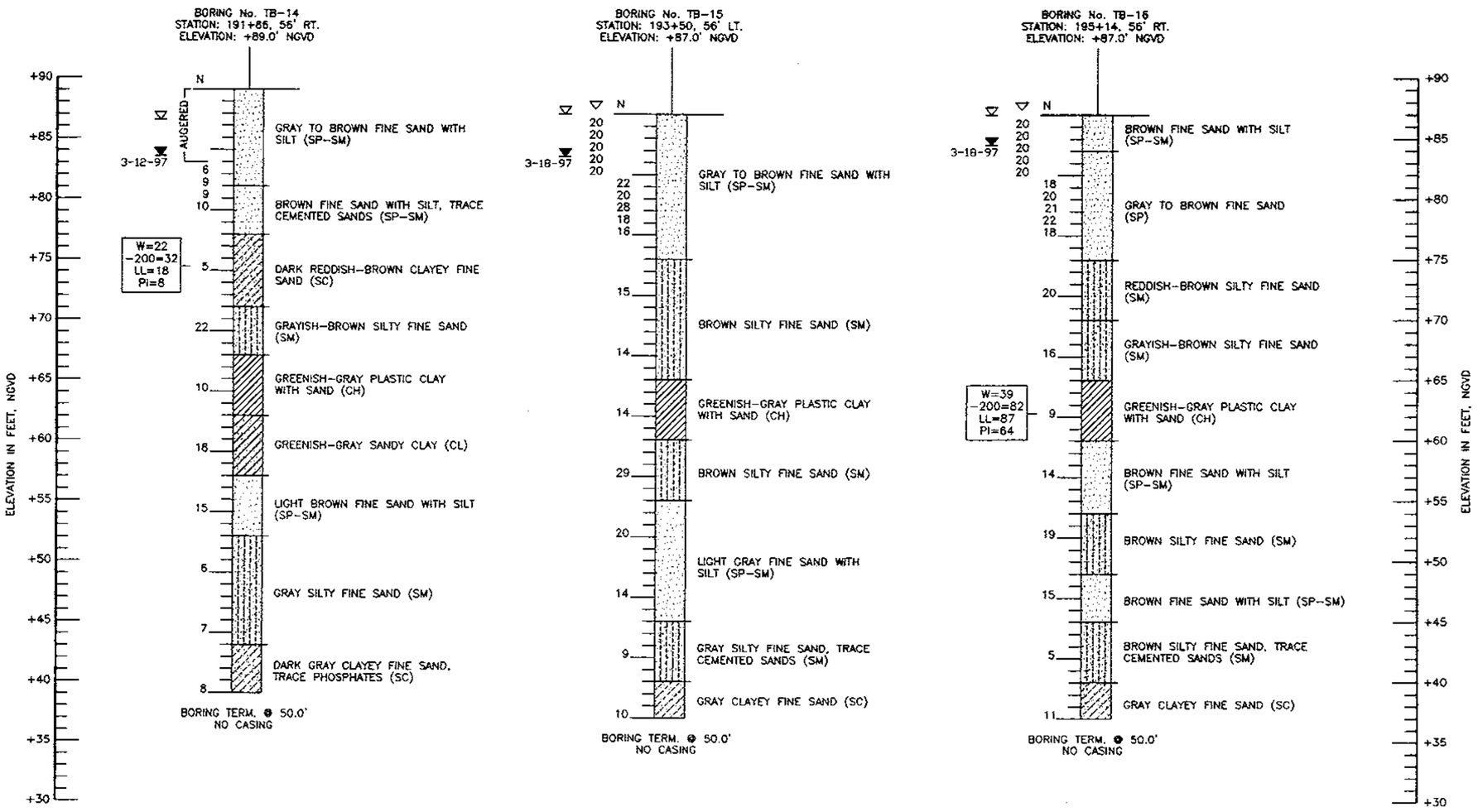

LEGEND

SAND
SILTY SAND
CLAYEY SAND
SANDY CLAY
CLAY

(SP) UNIFIED SOIL CLASSIFICATION GROUP SYMBOL

3-12-97 ENCOUNTERED GROUNDWATER LEVEL (DATE OF READING)

ESTIMATED SEASONAL HIGH GROUNDWATER LEVEL

W=22 NATURAL MOISTURE CONTENT (%)
-200=32 FINES PASSING No. 200 SIEVE (%)
LL=18 LIQUID LIMIT
PI=8 PLASTICITY INDEX

PENETROMETER READING

N STANDARD PENETRATION RESISTANCE IN BLOWS PER FOOT UNLESS OTHERWISE NOTED

STANDARD PENETRATION TEST DATA

SPOON INSIDE DIA.	1 3/8 IN.
SPOON OUTSIDE DIA.	2 IN.
ASTM STANDARD DROP SAFETY HAMMER (ROPE-CATHEAD)	
AVG. HAMMER DROP	30 IN.
HAMMER WEIGHT	140 LBS.

GRANULAR MATERIALS

RELATIVE DENSITY	SPT (BLOWS/FT.)	PENETROMETER READING
VERY LOOSE	LESS THAN 4	LESS THAN 16
LOOSE	4-10	16-40
MEDIUM DENSE	10-30	40-70+
DENSE	30-50	N/A
VERY DENSE	GREATER THAN 50	N/A

SILTS AND CLAYS

CONSISTENCY	SPT (BLOWS/FT.)
VERY SOFT	LESS THAN 2
SOFT	2-4
FIRM	4-8
STIFF	8-15
VERY STIFF	15-30
HARD	GREATER THAN 30

NOTES:

1) LAYER BOUNDARIES ARE APPROXIMATE AND MAY VARY BETWEEN OR AWAY FROM BORING LOCATIONS. SEE SECTION 120-3 OF THE STANDARD SPECIFICATIONS FOR MORE DETAILS.

2) BASED ON A REVIEW OF THE ST. JOHN'S RIVER WATER MANAGEMENT DISTRICT POTENTIOMETRIC MAPS OF THE UPPER FLORIDAN AQUIFER FOR THE PROJECT AREA, THE ESTIMATED ELEVATION OF THE ARTESIAN HEAD IS APPROXIMATELY +50 FEET, NGVD. THE CONTRACTOR SHALL BE PREPARED TO HANDLE ARTESIAN LEVELS UP TO ELEVATION +50 FEET, NGVD.

ENVIRONMENTAL CLASSIFICATION:

SUPERSTRUCTURE: N/A

SUBSTRUCTURE: STEEL: SLIGHTLY AGGRESSIVE
CONCRETE: SLIGHTLY AGGRESSIVE

REVISIONS

Date	By	Description	Date	By	Description

	Names	Dates
Drawn by	SW	1-15-98
Checked by	RA	1-15-98
Designed by	N/A	N/A
Checked by	N/A	N/A
Approved by	JAY W. CASPER, P.E.	

ENGINEER OF RECORD:
JAY W. CASPER, P.E. No. 36330
L.J. NODARSE & ASSOCIATES, INC.
1030 NORTH ORLANDO AVE.
WINTER PARK, FLORIDA

LOGO: Nodarse & Associates, Inc.

SEAL

FLORIDA DEPARTMENT OF TRANSPORTATION
GEOTECHNICAL DESIGN OFFICE

ROAD NO.	COUNTY	PROJECT NO.
S.R. 414	SEMINOLE	77002-3505

SHEET TITLE: REPORT OF SPT BORINGS FOR WALLS

PROJECT NAME: S.R. 414 (MAITLAND BOULEVARD) INTERCHANGE AT S.R. 434
SEMINOLE COUNTY, FLORIDA

Drawing No.

Index No.

NODARSE AND ASSOC. No. 96G-0409 FIGURE: 9

FED. ROAD DIV. NO.	STATE	PROJECT NO.	FISCAL YEAR	SHEET NO.
	FLA.			W-8

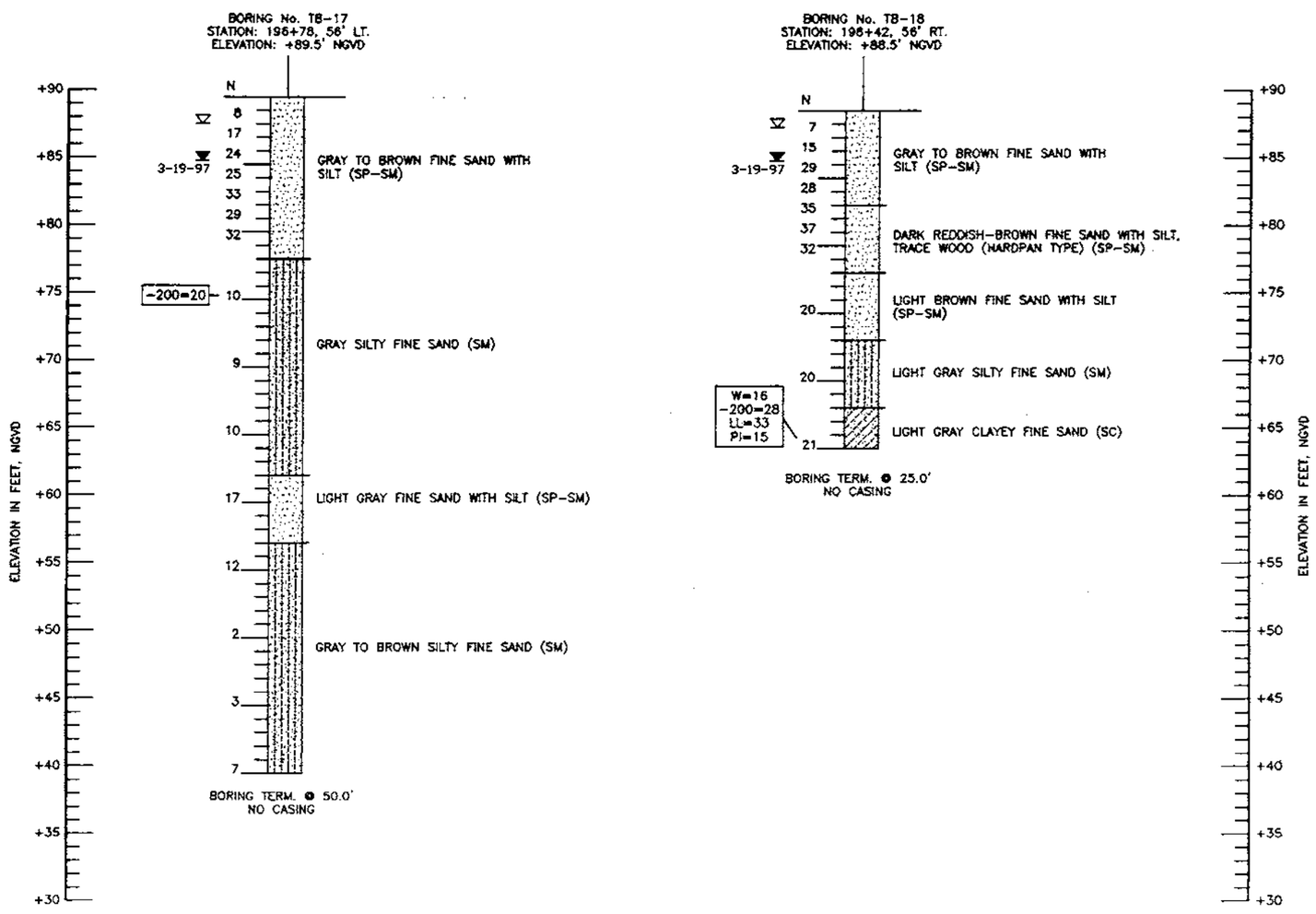

LEGEND

SAND
SILTY SAND
CLAYEY SAND

(SP) UNIFIED SOIL CLASSIFICATION GROUP SYMBOL

3-19-97 ENCOUNTERED GROUNDWATER LEVEL (DATE OF READING)

ESTIMATED SEASONAL HIGH GROUNDWATER LEVEL

W=16 NATURAL MOISTURE CONTENT (%)
-200=28 FINES PASSING No. 200 SIEVE (%)
LL=33 LIQUID LIMIT
PI=15 PLASTICITY INDEX

N STANDARD PENETRATION RESISTANCE IN BLOWS PER FOOT UNLESS OTHERWISE NOTED

STANDARD PENETRATION TEST DATA

SPOON INSIDE DIA.	1 3/8 IN.
SPOON OUTSIDE DIA.	2 IN.
ASTM STANDARD DROP SAFETY HAMMER (ROPE-CATHEAD)	
AVG. HAMMER DROP	30 IN.
HAMMER WEIGHT	140 LBS.

GRANULAR MATERIALS

RELATIVE DENSITY	SPT (BLOWS/FT.)
VERY LOOSE	LESS THAN 4
LOOSE	4-10
MEDIUM DENSE	10-30
DENSE	30-50
VERY DENSE	GREATER THAN 50

SILTS AND CLAYS

CONSISTENCY	SPT (BLOWS/FT.)
VERY SOFT	LESS THAN 2
SOFT	2-4
FIRM	4-8
STIFF	8-15
VERY STIFF	15-30
HARD	GREATER THAN 30

NOTES:

1) LAYER BOUNDARIES ARE APPROXIMATE AND MAY VARY BETWEEN OR AWAY FROM BORING LOCATIONS. SEE SECTION 120-3 OF THE STANDARD SPECIFICATIONS FOR MORE DETAILS.

2) BASED ON A REVIEW OF THE ST. JOHN'S RIVER WATER MANAGEMENT DISTRICT POTENTIOMETRIC MAPS OF THE UPPER FLORIDAN AQUIFER FOR THE PROJECT AREA, THE ESTIMATED ELEVATION OF THE ARTESIAN HEAD IS APPROXIMATELY +50 FEET, NGVD. THE CONTRACTOR SHALL BE PREPARED TO HANDLE ARTESIAN LEVELS UP TO ELEVATION +50 FEET, NGVD.

ENVIRONMENTAL CLASSIFICATION:

SUPERSTRUCTURE: N/A

SUBSTRUCTURE: STEEL: SLIGHTLY AGGRESSIVE
CONCRETE: SLIGHTLY AGGRESSIVE

REVISIONS

Date	By	Description	Date	By	Description

	Names	Dates
Drawn by	SW	1-15-98
Checked by	RA	1-15-98
Designed by	N/A	N/A
Checked by	N/A	N/A
Approved by	JAY W. CASPER, P.E.	

ENGINEER OF RECORD:
JAY W. CASPER, P.E. No. 36330
L.J. NODARSE & ASSOCIATES, INC.
1030 NORTH ORLANDO AVE.
WINTER PARK, FLORIDA

LOGO: Nodarse & Associates, Inc.

SEAL: 3/2/98

FLORIDA DEPARTMENT OF TRANSPORTATION
GEOTECHNICAL DESIGN OFFICE

ROAD NO.	COUNTY	PROJECT NO.
S.R. 414	SEMINOLE	77002-3505

SHEET TITLE: REPORT OF SPT BORINGS FOR WALLS

PROJECT NAME: S.R. 414 (MAITLAND BOULEVARD) INTERCHANGE AT S.R. 434
SEMINOLE COUNTY, FLORIDA

Drawing No.

Index No.

NODARSE AND ASSOC. No. 96G-0409 FIGURE: 10

FED. ROAD DIV. NO.	STATE	PROJECT NO.	FISCAL YEAR	SHEET NO.
3	FLA.	—		

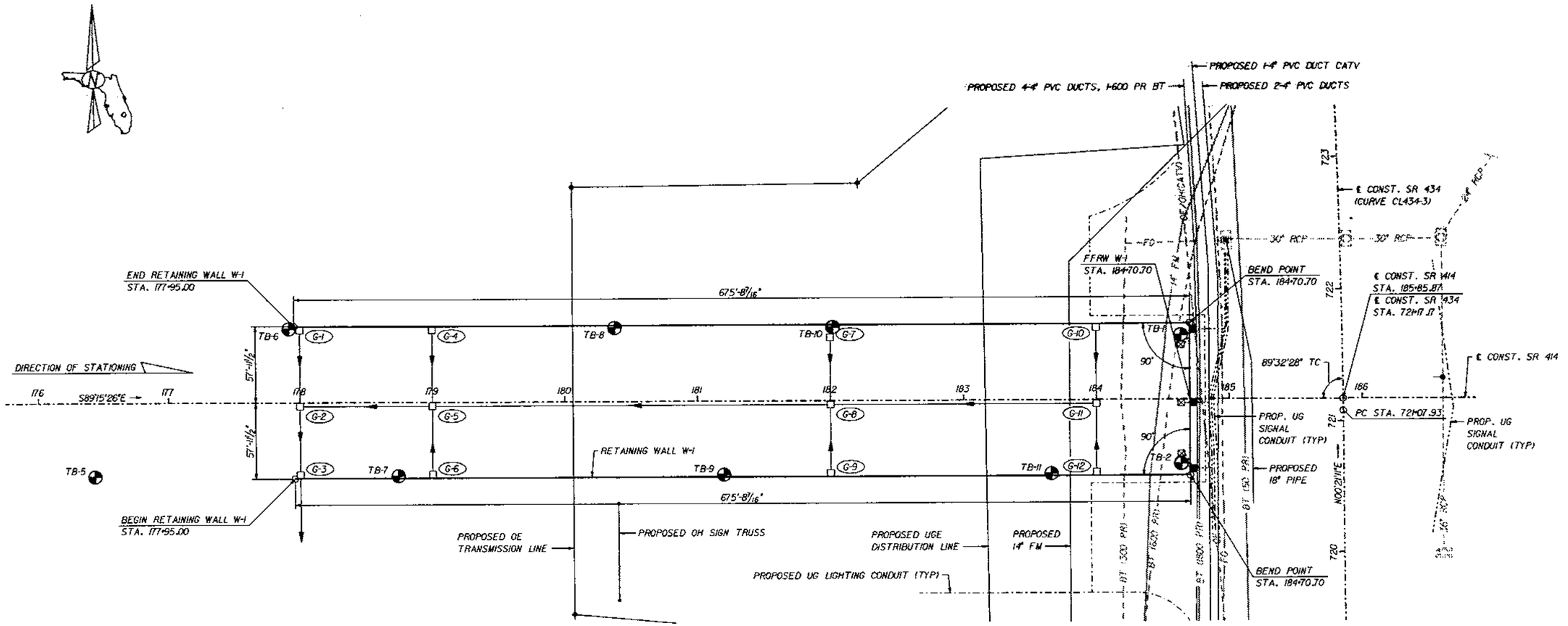

PLAN

LEGEND

- DENOTES APPROXIMATE LOCATION OF SPT BORING. FOR DETAILS SEE SHEETS W-3 THRU W-6, B-9 AND B-10.
- (G-1) PROPOSED INLETS. FOR LOCATIONS SEE ROADWAY PLANS.
- PROPOSED 18" PIPE SHOWING DIRECTION OF FLOW.
- END BENT SURFACE MOUNT PULL BOX FOR TRAFFIC SIGNALS.
- GROUND MOUNT PULL BOX FOR TRAFFIC SIGNALS.

NOTES

1. HORIZONTAL WALL DIMENSIONS SHOWN ARE MEASURED FROM THE FRONT FACE OF RETAINING WALL (FFRW).
2. EXISTING 14" FM AND OE/OH(CATV) UTILITIES ARE TO BE RELOCATED PRIOR TO THE CONSTRUCTION OF THE RETAINING WALLS. THE EXISTING BT UTILITIES UNDER THE PROPOSED WALL ARE TO REMAIN.
3. PROPOSED INLET AND PIPE LOCATIONS ARE APPROXIMATE. FOR MORE DETAILS SEE ROADWAY PLANS.
4. LOCATION OF PROPOSED UNDERGROUND TRAFFIC SIGNAL CONDUIT AND PULL BOXES IS APPROXIMATE. FOR DETAILS SEE SIGNALTIZATION PLANS, END BENT DETAILS IN BRIDGE PLANS AND RETAINING WALL SHEET W-15.

REVISIONS					
Date	By	Description	Date	By	Description

	Names	Dates
Drawn by	KAC	8/97
Checked by	MSE	8/97
Designed by	KS	8/97
Checked by	ADS	8/97
Approved by	MARK S. EICHOLTZ	

ENGINEER OF RECORD:
URS Greiner, Inc.
P.O. BOX 31646, 7640 WEST
COURTNEY CAMPBELL CAUSEWAY
TAMPA, FLORIDA 33607-1462

LOGO: URS Greiner

SEAL: Mark S. Eicholtz 3/2/98

FLORIDA DEPARTMENT OF TRANSPORTATION
STRUCTURES DESIGN OFFICE

ROAD NO.	COUNTY	PROJECT NO.
SR 414	SEMINOLE	77002-3505

SHEET TITLE: PLAN - RETAINING WALL W-1

PROJECT NAME: S.R. 414 OVER S.R. 434

Drawing No.

Index No.

PLOTTED: 28JAN98-07:57:50

FED. ROAD DIV. NO.	STATE	PROJECT NO.	FISCAL YEAR	SHEET NO.
3	FLA.			W-10

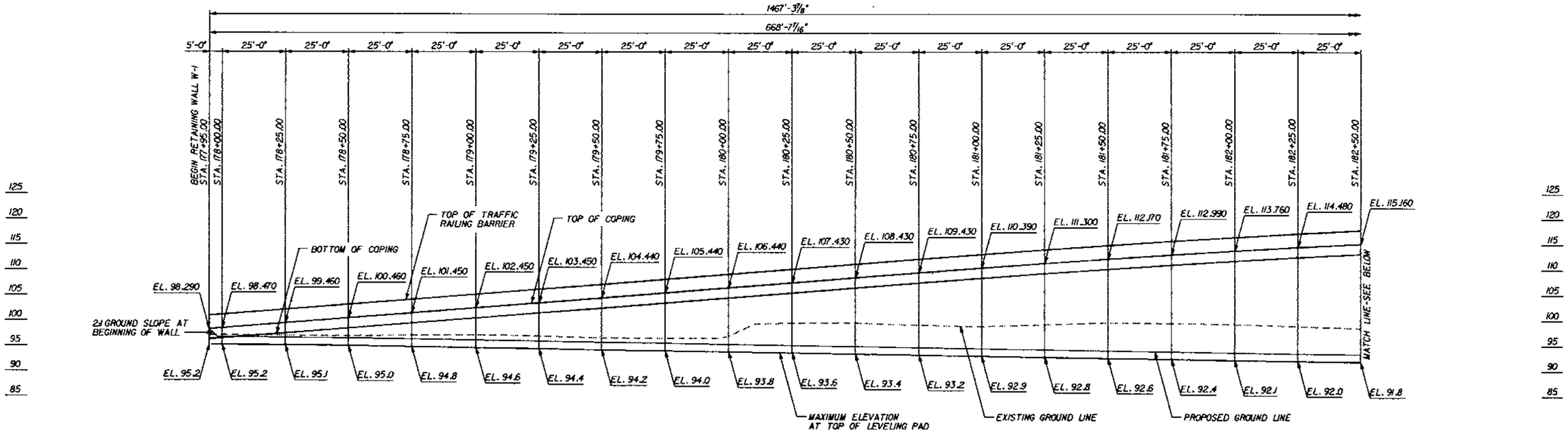

PARTIAL ELEVATION

(UNFOLDED VIEW - LOOKING STATIONS BACK)

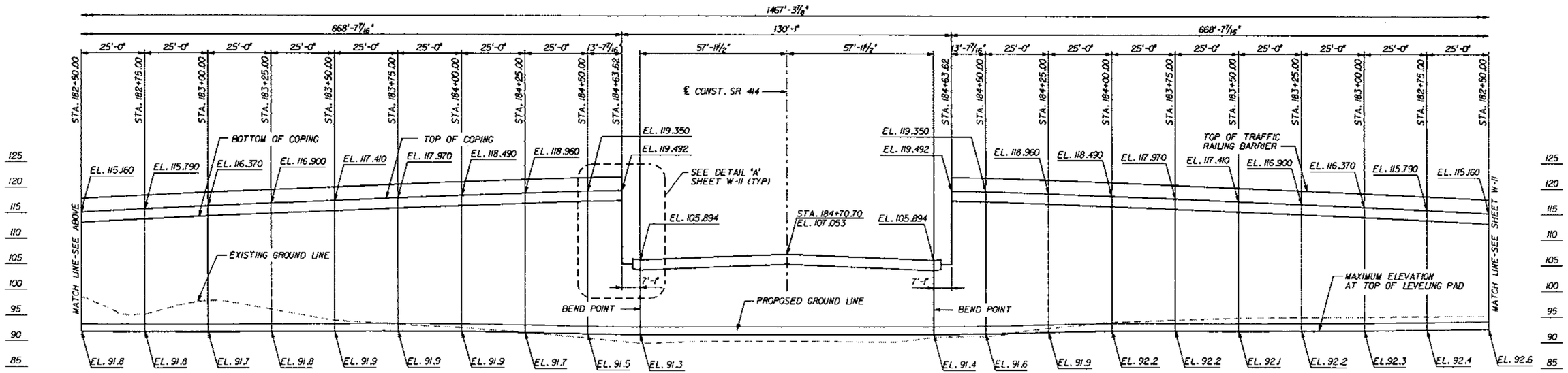

PARTIAL ELEVATION

(UNFOLDED VIEW - LOOKING STATIONS BACK)

NOTES:

1. ELEVATIONS ARE ALONG FRONT FACE OF RETAINING WALL UNLESS NOTED OTHERWISE.

WORK THIS SHEET WITH SHEET W-11.

REVISIONS					
Date	By	Description	Date	By	Description

	Names	Dates
Drawn by	KAC	8/97
Checked by	MSE	8/97
Designed by	KS	8/97
Checked by	ADS	8/97
Approved by	MARK S. EICHOLTZ	

ENGINEER OF RECORD:
URS Greiner
P.O. BOX 3646, 7440 WEST
COURTNEY CAMPBELL CAUSEWAY
TAMPA, FLORIDA 33607-1462

LOGO: URS Greiner

SEAL: Mark S. Eicholtz 3/2/98

FLORIDA DEPARTMENT OF TRANSPORTATION
STRUCTURES DESIGN OFFICE

ROAD NO.	COUNTY	PROJECT NO.
SR 414	SEMINOLE	77002-3505

SHEET TITLE: ELEVATION RETAINING WALL W-1 (1)

PROJECT NAME: S.R. 414 OVER S.R. 434

Drawing No.

Index No.

28 JAN 98 11:05:03

a:\bridges\project "~"atland\br+wmb01.dgn

FED. ROAD DIV. NO.	STATE	PROJECT NO.	FISCAL YEAR	SHEET NO.
3	FLA.			W-11

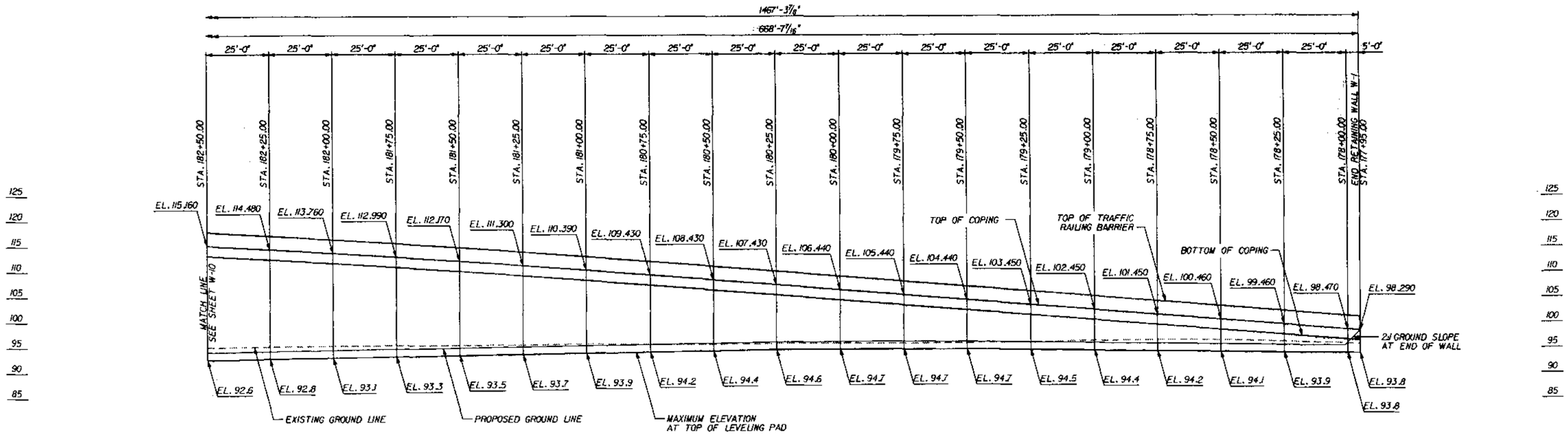

PARTIAL ELEVATION

(UNFOLDED VIEW - LOOKING STATIONS BACK)

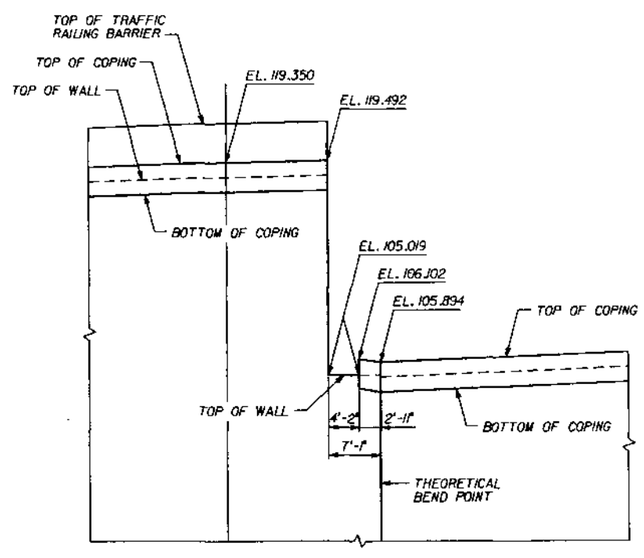

DETAIL "A"

WORK THIS SHEET WITH SHEET W-10.

REVISIONS					
Date	By	Description	Date	By	Description

	Names	Dates
Drawn by	KAC	8/97
Checked by	MSE	8/97
Designed by	KS	8/97
Checked by	ADS	8/97
Approved by	MARK S. EICHOLTZ	

ENGINEER OF RECORD:
URS Greiner
P.O. BOX 33646, 7440 WEST
COURTNEY CAMPBELL CAUSEWAY
TAMPA, FLORIDA 33607-1462

LOGO: URS Greiner

SEAL: Mark S. Eicholtz 3/2/98

FLORIDA DEPARTMENT OF TRANSPORTATION
STRUCTURES DESIGN OFFICE

ROAD NO.	COUNTY	PROJECT NO.
SR 414	SEMINOLE	77002-3505

SHEET TITLE: ELEVATION RETAINING WALL W-1 (2)

Drawing No.

PROJECT NAME: S.R. 414 OVER S.R. 434

Index No.

07 JAN 98 11:31:22

FED. ROAD DIV. NO.	STATE	PROJECT NO.	FISCAL YEAR	SHEET NO.
3	FLA.	—		W-12

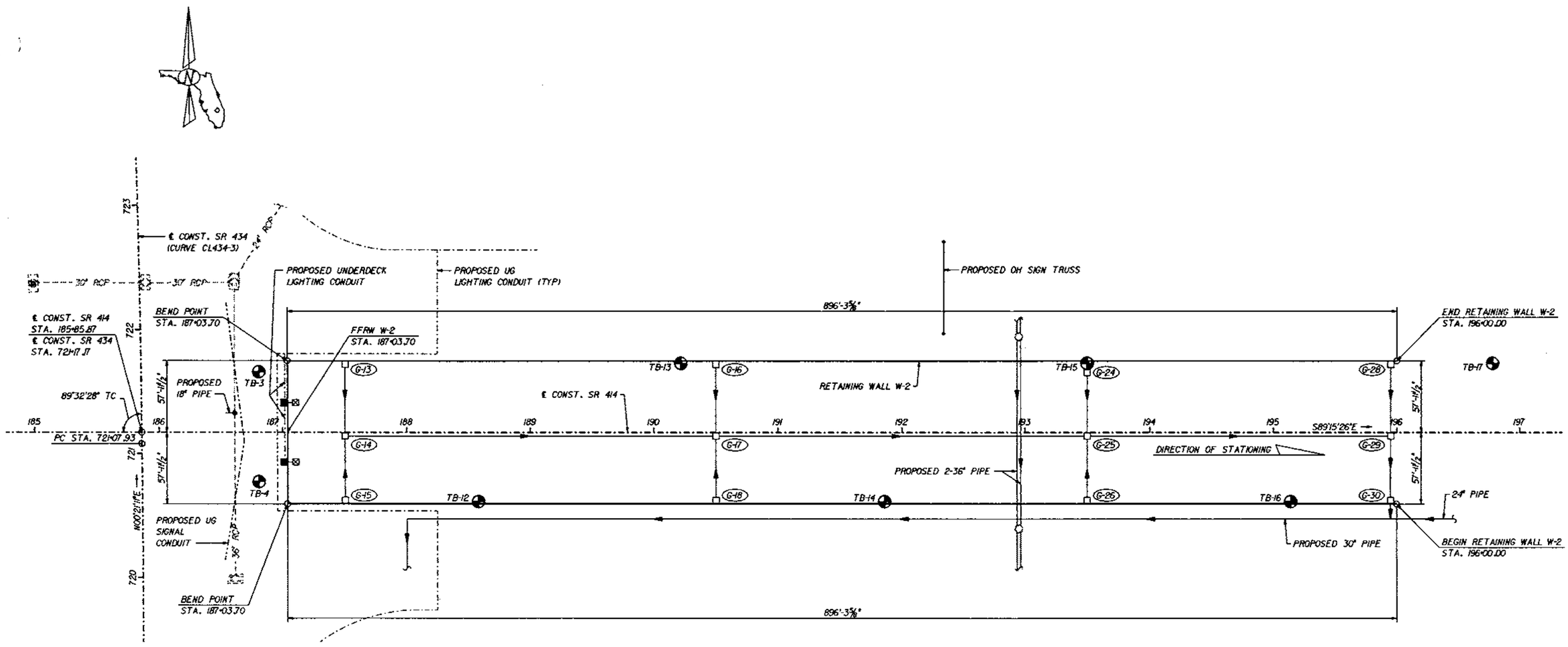

PLAN

LEGEND

- ◐ DENOTES APPROXIMATE LOCATION OF SPT BORING. FOR DETAILS SEE SHEETS W-3, W-6 THRU W-8, B-9 AND B-11.
- □ (G-13) PROPOSED INLETS. FOR LOCATIONS SEE ROADWAY PLANS.
- ——◄ PROPOSED 18" PIPE (UNO) SHOWING DIRECTION OF FLOW.
- ⊠ END BENT SURFACE MOUNT PULL BOX FOR UNDERDECK LIGHTING.
- ■ GROUND MOUNT PULL BOX FOR UNDERDECK LIGHTING.

NOTES

1. HORIZONTAL WALL DIMENSIONS SHOWN ARE MEASURED FROM THE FRONT FACE OF RETAINING WALL (FFRW).
2. PROPOSED INLET AND PIPE LOCATIONS ARE APPROXIMATE. FOR MORE DETAILS SEE ROADWAY PLANS.
3. LOCATION OF UNDERDECK LIGHTING CONDUIT AND PULL BOXES IS APPROXIMATE. FOR DETAILS SEE LIGHTING PLANS, END BENT DETAILS IN BRIDGE PLANS AND RETAINING WALL SHEET W-15.

REVISIONS					
Date	By	Description	Date	By	Description

	Names	Dates
Drawn by	KAC	8/97
Checked by	MSE	8/97
Designed by	KS	8/97
Checked by	ADS	8/97
Approved by	MARK S. EICHOLTZ	

ENGINEER OF RECORD:
URS Greiner, Inc.
P.O. BOX 31646, 7650 WEST
COURTNEY CAMPBELL CAUSEWAY
TAMPA, FLORIDA 33607-1462

LOGO: URS Greiner

SEAL: Mark S. Eicholtz 3/2/98

FLORIDA DEPARTMENT OF TRANSPORTATION
STRUCTURES DESIGN OFFICE

ROAD NO.	COUNTY	PROJECT NO.
SR 414	SEMINOLE	77002-3505

SHEET TITLE: PLAN - RETAINING WALL W-2

PROJECT NAME: S.R. 414 OVER S.R. 434

Drawing No.

Index No.

PLOTTED: 28JAN98-08:04:00

$IRDIAG: MAITLAND.CADD.FG BRTWM805.FGB

c:\bridges\projects\maitland\brtwmb01.dgn

FED. ROAD DIV. NO.	STATE	PROJECT NO.	PAGE NO.	SHEET NO.
3	FLA.			W-13

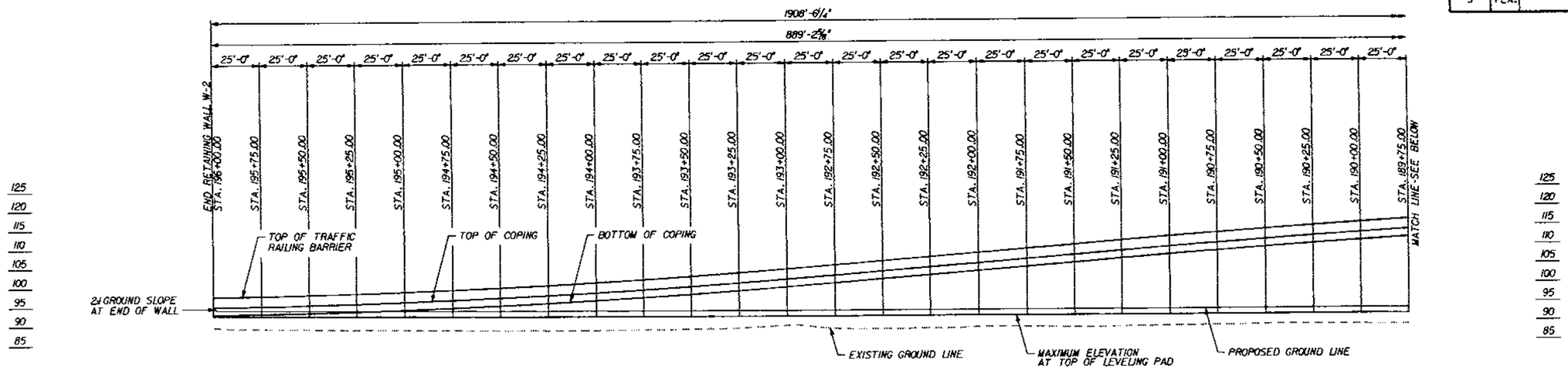

PARTIAL ELEVATION

(UNFOLDED VIEW - LOOKING STATIONS AHEAD)

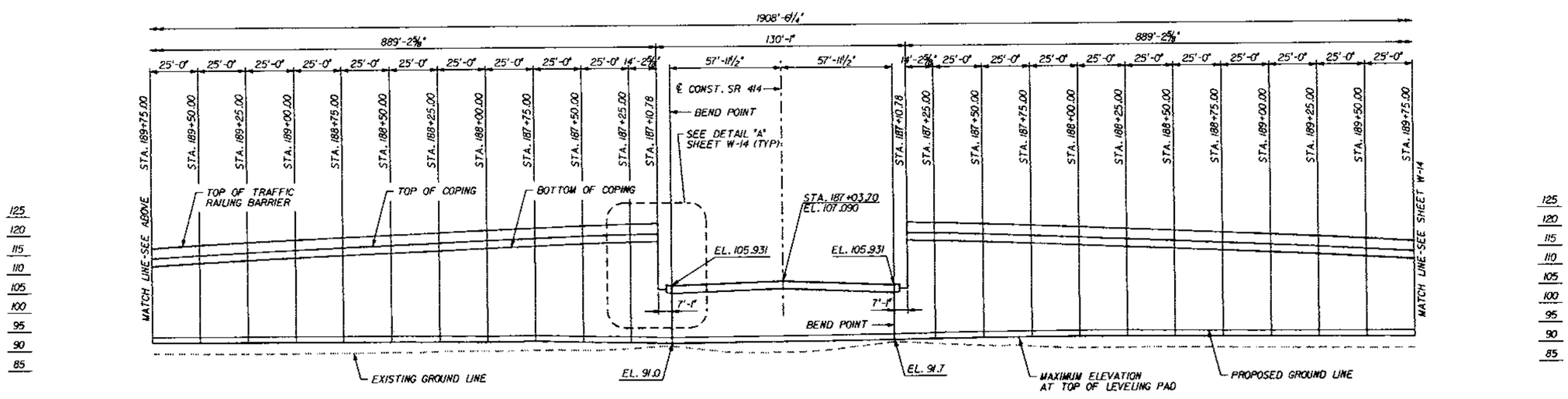

PARTIAL ELEVATION

(UNFOLDED VIEW - LOOKING STATIONS AHEAD)

NOTES:

1. ELEVATIONS ARE ALONG FRONT FACE OF RETAINING WALL UNLESS NOTED OTHERWISE.

WORK THIS SHEET WITH SHEET W-14.

REVISIONS					
Date	By	Description	Date	By	Description

	Names	Dates
Drawn by	KAC	8/97
Checked by	WSE	8/97
Designed by	KS	8/97
Checked by	ADS	8/97
Approved by	MARK S. EICHOLTZ	

ENGINEER OF RECORD:
URS Greiner
P.O. BOX 3446, 7601 WEST
COURTNEY CAMPBELL CAUSEWAY
TAMPA, FLORIDA 33607-1462

LOGO: URS Greiner

SEAL: Mark S. Eicholtz 3/2/98

FLORIDA DEPARTMENT OF TRANSPORTATION
STRUCTURES DESIGN OFFICE

ROAD NO.	COUNTY	PROJECT NO.
SR 414	SEMINOLE	77002-3505

SHEET TITLE: **ELEVATION RETAINING WALL W-2 (1)**

Drawing No.

PROJECT NAME: **S.R. 414 OVER S.R. 434**

Index No.

28 JAN 98 12:04:27

FED. ROAD DIV. NO.	STATE	PROJECT NO.	FISCAL YEAR	SHEET NO.
3	FLA.			W-14

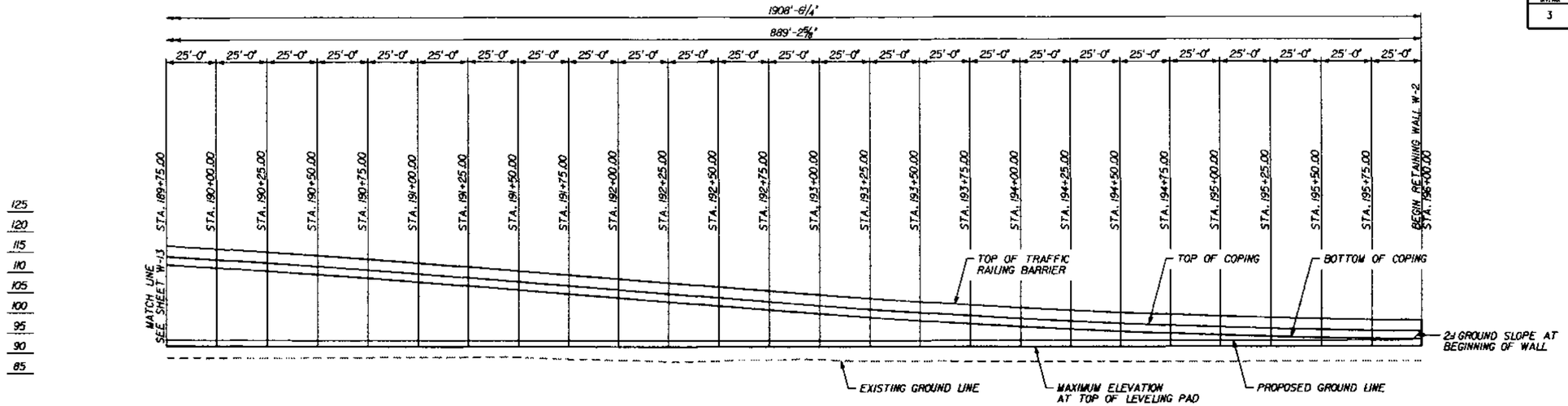

PARTIAL ELEVATION

(UNFOLDED VIEW - LOOKING STATIONS AHEAD)

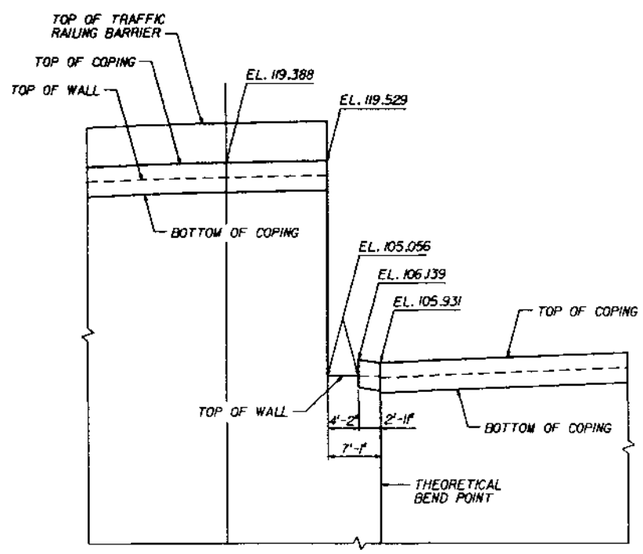

DETAIL "A"

STATIONS	TOP OF COPING LEFT ELEVATION	TOP OF COPING RIGHT ELEVATION	TOP OF LEVELING PAD LEFT ELEVATION	TOP OF LEVELING PAD RIGHT ELEVATION
187+10.78	119.529	119.529	91.1	91.8
187+25.00	119.388	119.388	91.3	91.9
187+50.00	118.998	118.998	91.5	92.1
187+75.00	118.535	118.535	91.8	92.2
188+00.00	118.024	118.024	91.7	92.3
188+25.00	117.465	117.465	91.8	92.2
188+50.00	116.964	116.964	91.9	92.1
188+75.00	116.439	116.439	91.9	92.1
189+00.00	115.867	115.867	91.9	92.0
189+25.00	115.246	115.246	91.9	91.9
189+50.00	114.577	114.577	91.9	91.9
189+75.00	113.860	113.860	91.9	91.8
190+00.00	113.095	113.095	91.9	91.7
190+25.00	112.283	112.283	91.9	91.7
190+50.00	111.422	111.422	91.9	91.6
190+75.00	110.513	110.513	91.9	91.6
191+00.00	109.556	109.556	91.9	91.5
191+25.00	108.560	108.560	91.9	91.5
191+50.00	107.560	107.560	91.9	91.5
191+75.00	106.560	106.560	91.9	91.5
192+00.00	105.560	105.560	91.9	91.5
192+25.00	104.560	104.560	91.9	91.4
192+50.00	103.560	103.560	91.9	91.4
192+75.00	102.560	102.560	91.9	91.4
193+00.00	101.566	101.582	91.9	91.4
193+25.00	100.628	100.673	91.9	91.4
193+50.00	99.761	99.833	92.0	91.4
193+75.00	98.964	99.062	92.0	91.4
194+00.00	98.236	98.361	92.0	91.4
194+25.00	97.578	97.729	92.1	91.4
194+50.00	96.990	97.168	92.1	91.4
194+75.00	96.472	96.675	92.2	91.4
195+00.00	96.024	96.252	92.3	91.4
195+25.00	95.645	95.899	92.4	91.4
195+50.00	95.336	95.615	92.5	91.5
195+75.00	95.097	95.401	92.5	91.5
196+00.00	94.928	95.250	92.6	91.5

WORK THIS SHEET WITH SHEET W-13.

REVISIONS

Date	By	Description	Date	By	Description

	Names	Dates
Drawn by	KAC	8/97
Checked by	MSE	8/97
Designed by	KS	8/97
Checked by	ADS	8/97
Approved by	MARK S. EICHOLTZ	

ENGINEER OF RECORD: URS Greiner, P.O. BOX 3545, 7681 WEST COURTNEY CAMPBELL CAUSEWAY, TAMPA, FLORIDA 33607-1462

LOGO: URS Greiner

SEAL: Mark S. Eicholtz 3/2/98

FLORIDA DEPARTMENT OF TRANSPORTATION
STRUCTURES DESIGN OFFICE

ROAD NO.	COUNTY	PROJECT NO.
SR 414	SEMINOLE	77002-3505

SHEET TITLE: ELEVATION RETAINING WALL W-2 (2)

PROJECT NAME: S.R. 414 OVER S.R. 434

Drawing No.

Index No.

28 JAN 98 11:14:23

c:\bridges\project ...ltland\brtwmb01.dgn

FED. ROAD DIV. NO.	STATE	PROJECT NO.	FISCAL YEAR	SHEET NO.
3	FLA.	—		W-15

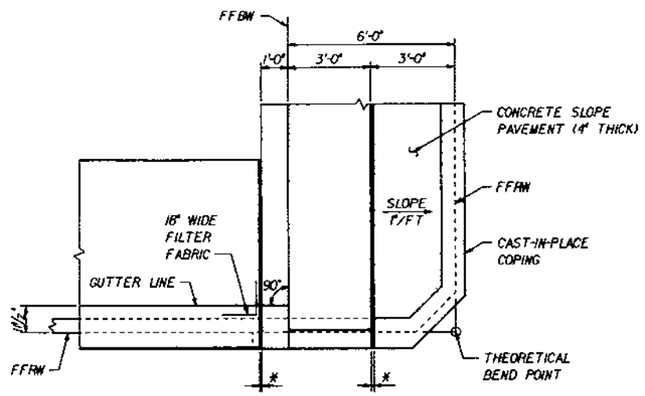

SECTION A-A
(APPROACH SLAB NOT SHOWN)

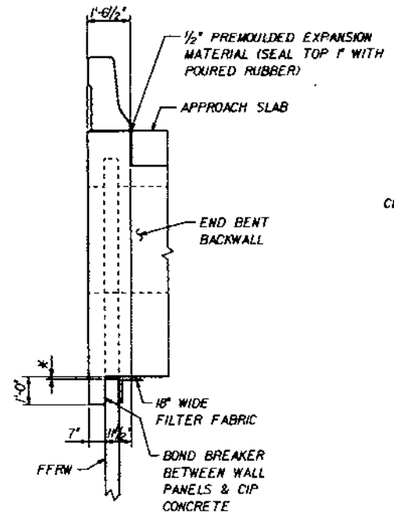

SECTION B-B

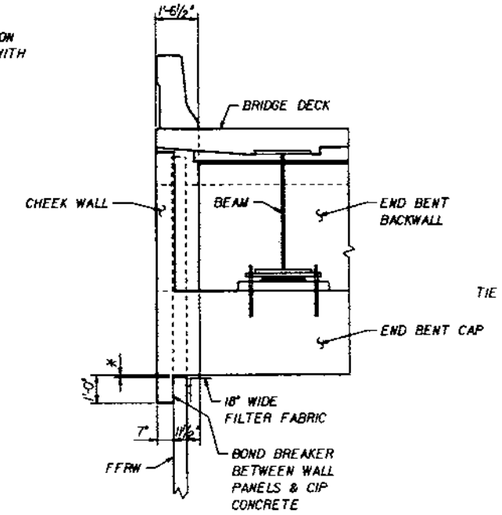

SECTION C-C

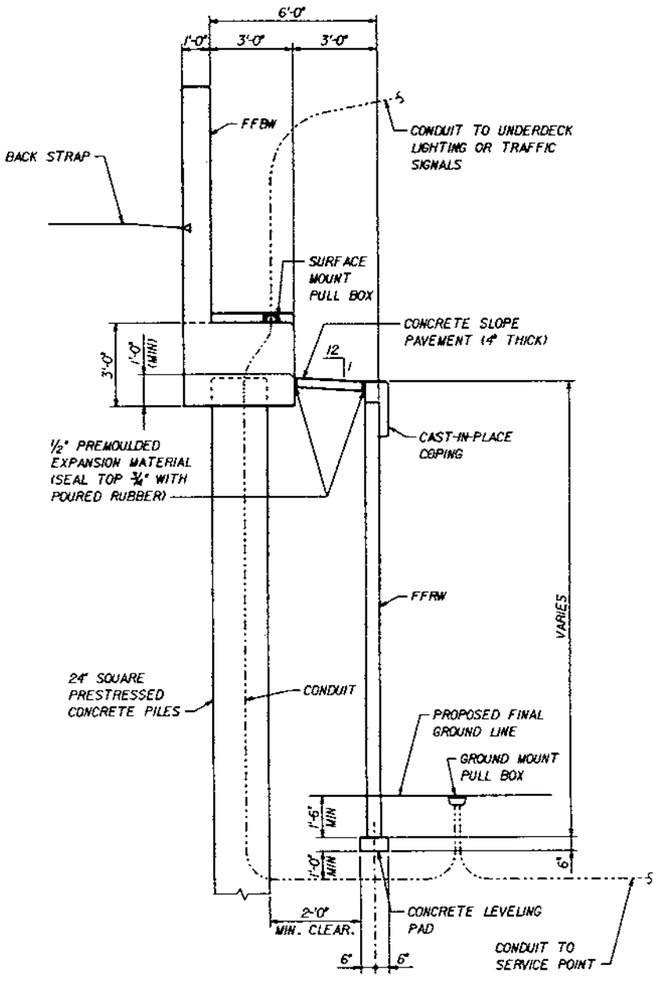

CONDUIT DETAILS UNDER BRIDGE AT END BENT

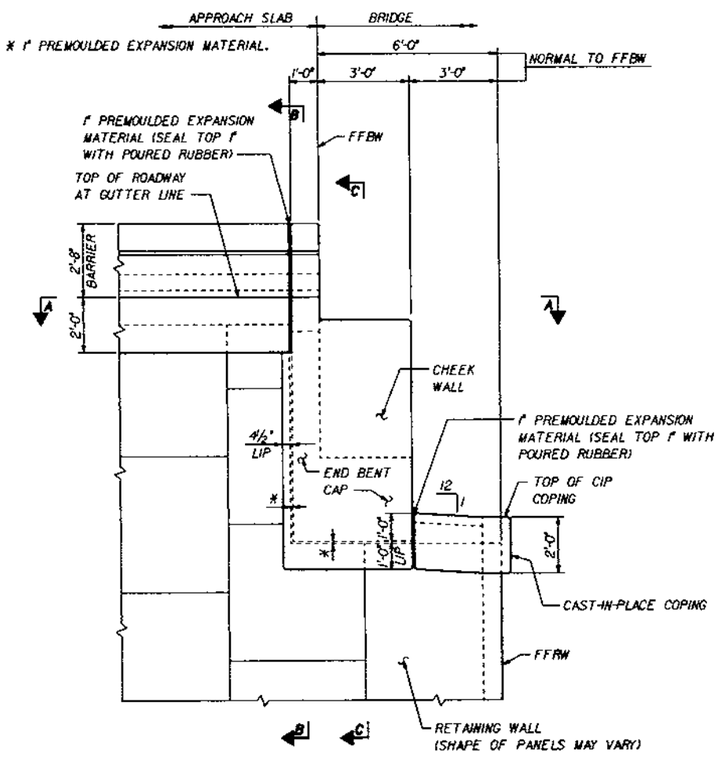

END ELEVATION AT END BENT

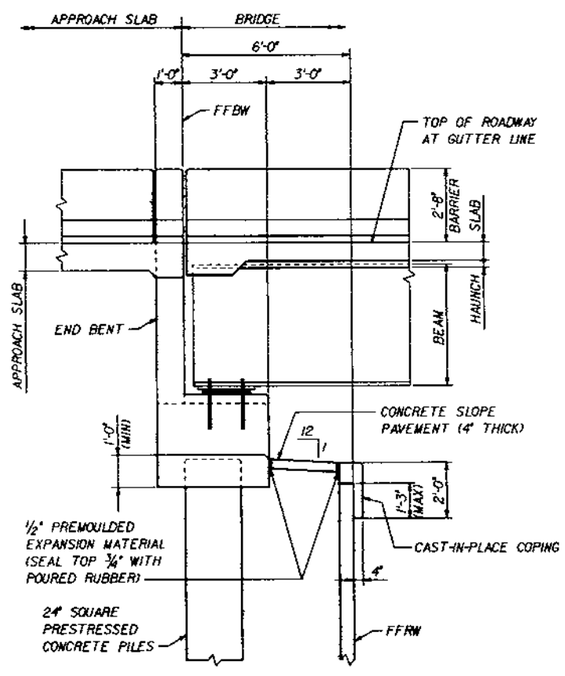

TYPICAL SECTION UNDER BRIDGE AT END BENT
(NORMAL TO FFBW)

REVISIONS					
Date	By	Description	Date	By	Description

	Names	Dates
Drawn by	JB	8/97
Checked by	MSE	8/97
Designed by	MSE	8/97
Checked by	ADS	8/97
Approved by	MARK S. EICHOLTZ	

ENGINEER OF RECORD:
URS Greiner, Inc.
P.O. BOX 31646, 7500 WEST
COURTNEY CAMPBELL CAUSEWAY
TAMPA, FLORIDA 33607-1448

LOGO: URS Greiner

SEAL: Mark S. Eicholtz 3/2/98

FLORIDA DEPARTMENT OF TRANSPORTATION
STRUCTURES DESIGN OFFICE

ROAD NO.	COUNTY	PROJECT NO.
SR 414	SEMINOLE	77002-3505

SHEET TITLE: RETAINING WALL DETAILS (1)

PROJECT NAME: S.R. 414 OVER S.R. 434

Drawing No.

Index No.

FRAMMIT

PLOTTED: 28JAN98-08:26:20

FED. ROAD DIV. NO.	STATE	PROJECT NO.	FISCAL YEAR	SHEET NO.
3	FLA.	—		W-16

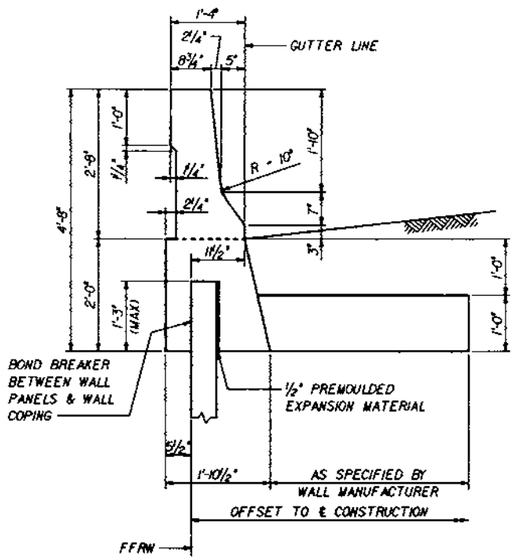

PRECAST OPTION
TRAFFIC RAILING BARRIER AT ROADWAY

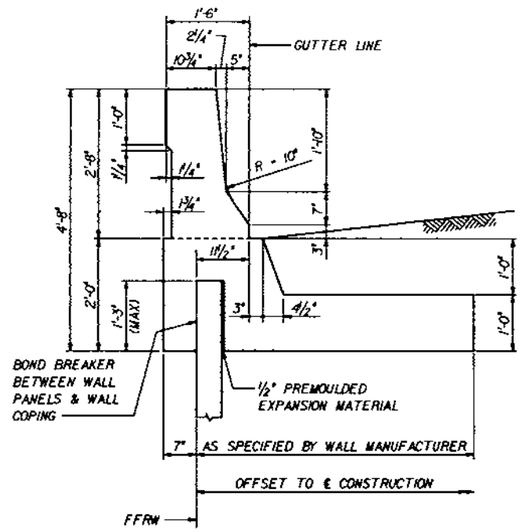

CAST-IN-PLACE OPTION
TRAFFIC RAILING BARRIER AT ROADWAY

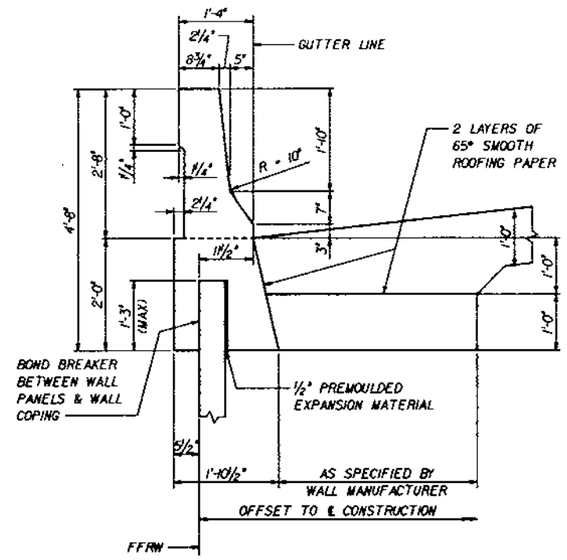

PRECAST OPTION
TRAFFIC RAILING BARRIER AT APPROACH SLAB

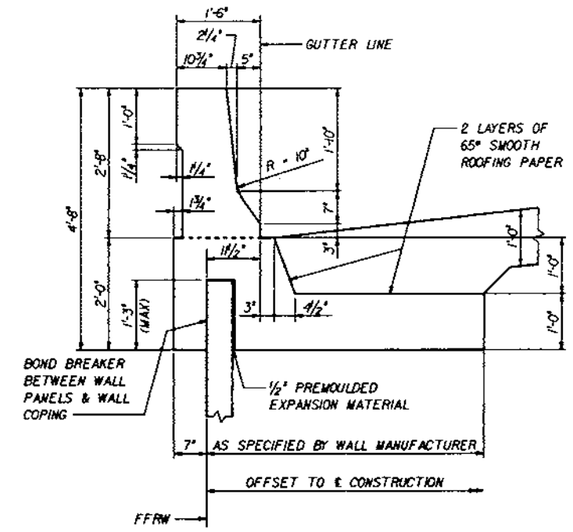

CAST-IN-PLACE OPTION
TRAFFIC RAILING BARRIER AT APPROACH SLAB

REVISIONS					
Date	By	Description	Date	By	Description

	Names	Dates
Drawn by	JB	8/97
Checked by	MSE	8/97
Designed by	MSE	8/97
Checked by	ADS	8/97
Approved by	MARK S. EICHOLTZ	

ENGINEER OF RECORD:
URS Greiner, Inc.
P.O. BOX 31646, 7400 WEST
COURTNEY CAMPBELL CAUSEWAY
TAMPA, FLORIDA 33607-1462

LOGO: URS Greiner

SEAL: Mark S. Eicholtz 3/2/98

FLORIDA DEPARTMENT OF TRANSPORTATION
STRUCTURES DESIGN OFFICE

ROAD NO.	COUNTY	PROJECT NO.
SR 414	SEMINOLE	77002-3505

SHEET TITLE: RETAINING WALL DETAILS (2)

PROJECT NAME: S.R. 414 OVER S.R. 434

Drawing No.

Index No.

FRAMNAME: $$DIAG: MAITLAND.CADD.FG BRTWWB03.FGBI

PLOTTED: 16JAN98-15:57 JO

FED. ROAD DIV. NO.	STATE	PROJECT NO.	FISCAL YEAR	SHEET NO.
3	FLA.			W-17

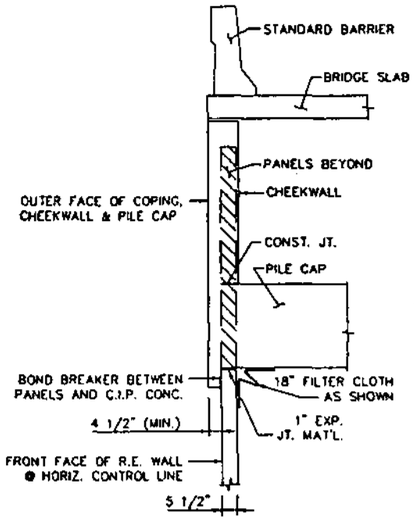

SECTION B-B (x)
SCALE: 1/2" = 1'-0"

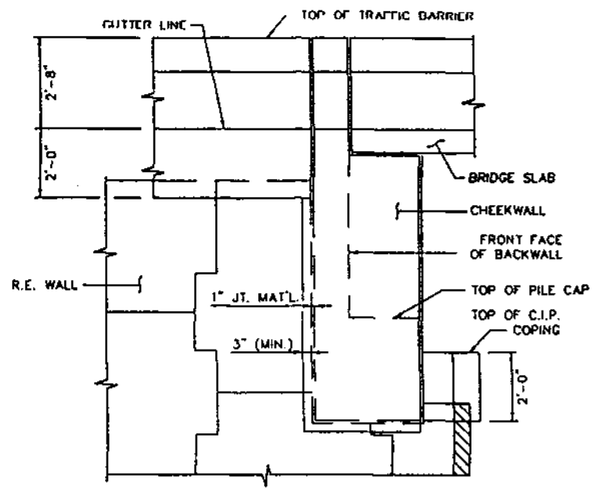

SECTION A-A (x)
SCALE: 1/2" = 1'-0"

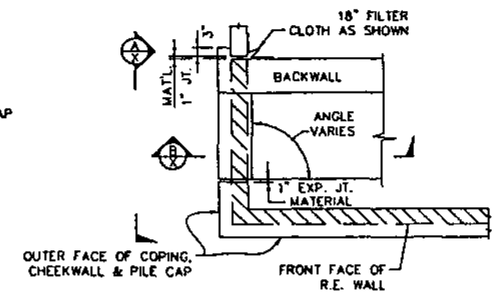

PLAN VIEW @ BEND (TYP.) (x)
SCALE: 1/2" = 1'-0"

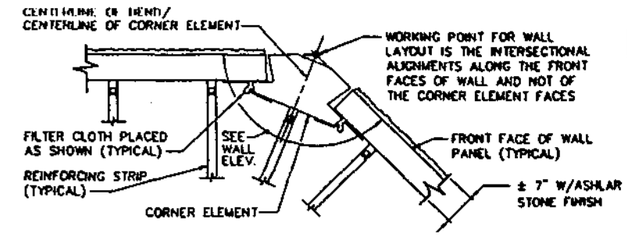

CORNER ELEMENT DETAIL (PLAIN FINISH)
SCALE: 3/4" = 1'-0"

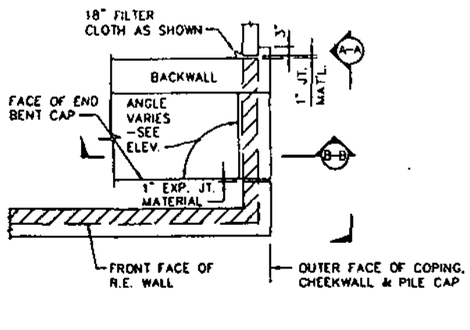

PARTIAL PLAN @ ABUT. END (TYP.)
SCALE: 1/2" = 1'-0"

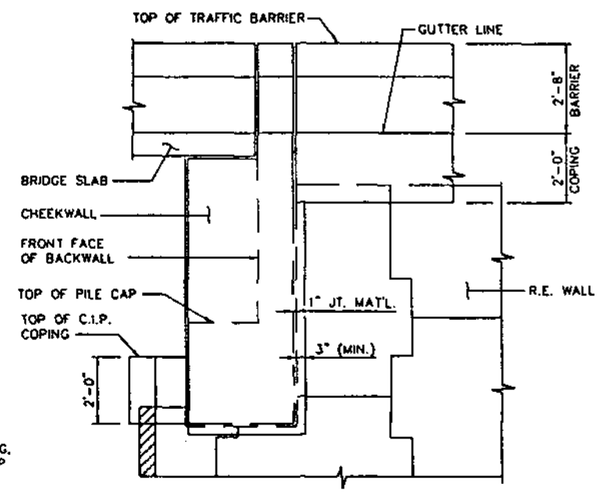

VIEW A-A
SCALE: 1/2" = 1'-0"

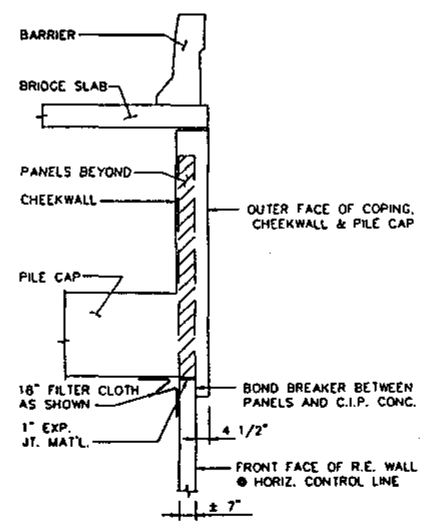

SECTION B-B
SCALE: 1/2" = 1'-0"

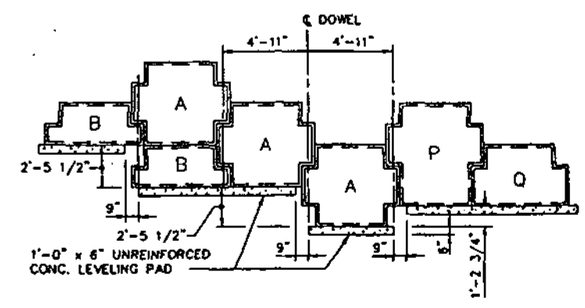

TYPICAL LEVELLING PAD STEP DETAIL
SCALE: 1/4" = 1'-0"

This drawing contains information proprietary to The Reinforced Earth Company, and is being furnished for the use of F.D.O.T. only in connection with this project, and the information contained is not to be transmitted to any other organization unless specifically authorized in writing by The Reinforced Earth Company. The Reinforced Earth Company is exclusive licensee in the United States under patents issued to Henri Vidal, and the furnishing of this drawing does not constitute an expressed or implied license under the Vidal patents.

The design contained on these drawings is based on information provided by the owner. On the basis of this information, The Reinforced Earth Company has designed, and is responsible for the internal stability of the structure only. External stability including foundation and slope stability, is the responsibility of the owner.

CERTIFIED WITH RESPECT TO INTERNAL STABILITY OF REINFORCED EARTH STRUCTURES ONLY

REVISIONS							
Date	By	No.	Description	Date	By	No.	Description

	Names	Dates
Drawn by	AO	6/27/95
Checked by		
Designed by	AO	6/27/95
Checked by		
Engineering Manager	cjp	

The Reinforced Earth Company
reinforced earth
8614 Westwood Center Drive
Suite 1100
Vienna, Virginia 22182
(703) 821-1175 Fax 821-1815

"REINFORCED EARTH" is the registered trademark of The Reinforced Earth Company.

PROJECT STATUS

PRELIMINARY FOR REVIEW 6/27/95 | PRELIMINARY FOR BIDDING _____ | FINAL FOR CONSTRUCTION _____

FLORIDA DEPARTMENT OF TRANSPORTATION
STRUCTURES DESIGN OFFICE

ROAD NO.	COUNTY	PROJECT NO.
SR 414	SEMINOLE	77002-3505

Sheet Title: STANDARD DETAILS

Project Name: S.R. 414 OVER S.R. 434

Revision No. | Scale | Drawing No. OF | RECO Proj. No.

FED ROAD DIV. NO.	STATE	PROJECT NO.	FISCAL YEAR	SHEET NO.
3	FLA.		W	18

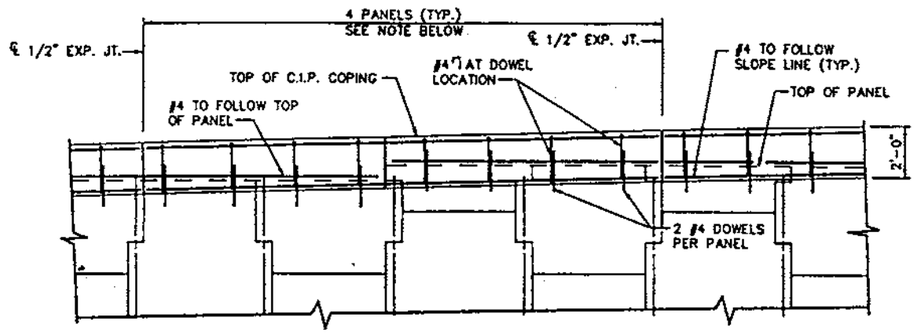

NOTE : EXPANSION JOINTS IN C.I.P. COPING SHALL BE AT FOUR PANEL INTERVALS. COPING JOINTS MUST BE COINCIDE WITH PANEL JOINTS ON FRONT FACE AND SHALL BE PERPENDICULAR TO SLOPE LINE. REINFORCING STEEL SHALL STOPPED 2" SHORT OF EITHER SIDE OF THE EXPANSION JOINT. CONTRACTION JOINTS SHALL BE PLACED IN MIDDLE PORTION ON 4 PANEL UNIT TO COINCIDE WITH PANEL JOINT.

C.I.P. COPING PARTIAL ELEVATION
(1) SCALE: 3/8" = 1'-0"

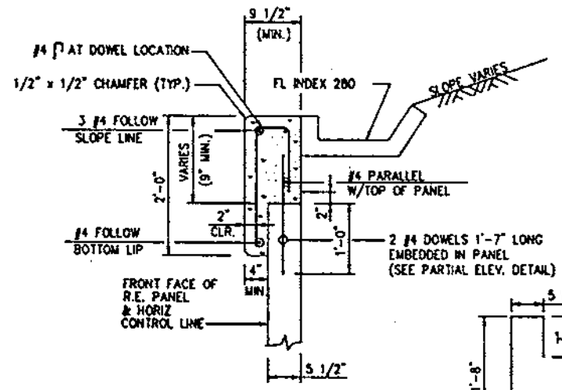

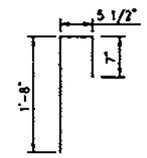

C.I.P. CONC. COPING DETAIL
(2) SCALE: 1" = 1'-0"

BAR BEND

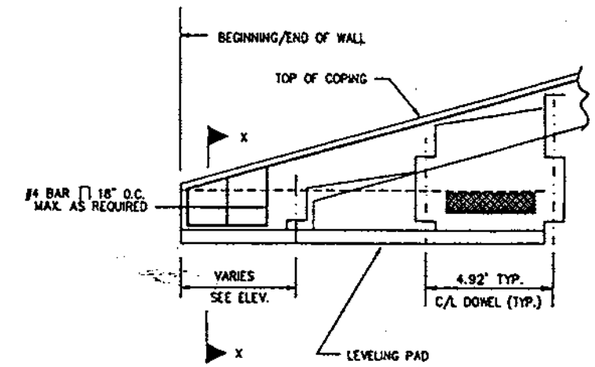

COPING ENCLOSURE DETAIL
(3) SCALE: 3/4" = 1'-0"

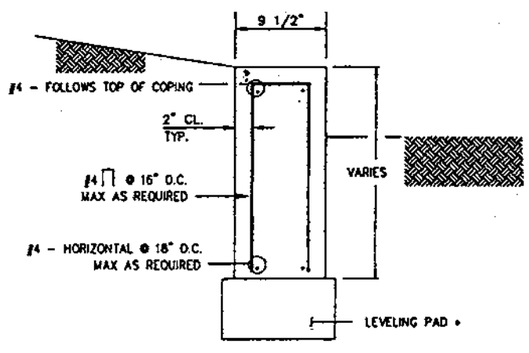

* CONTRACTOR MAY CHOOSE TO ELIMINATE LEVELING PAD @ COPING ENCLOSURE BY SETTING BOTTOM OF ENCLOSURE EQUAL TO BOTTOM OF LEVELING PAD.

SECTION X-X
(4) SCALE: 3/4" = 1'-0"

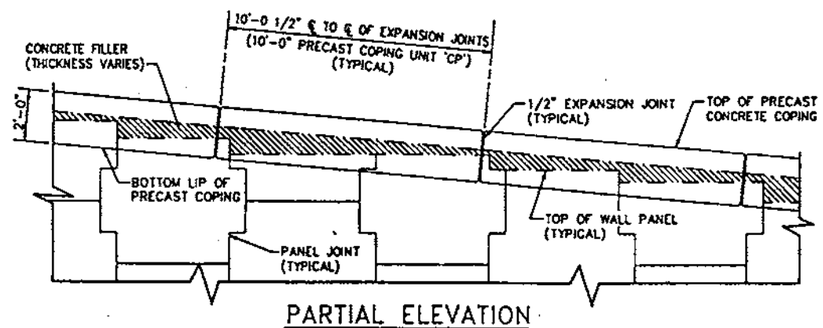

PARTIAL ELEVATION
PRECAST CONCRETE COPING
(5) SCALE: 3/8" = 1'-0"

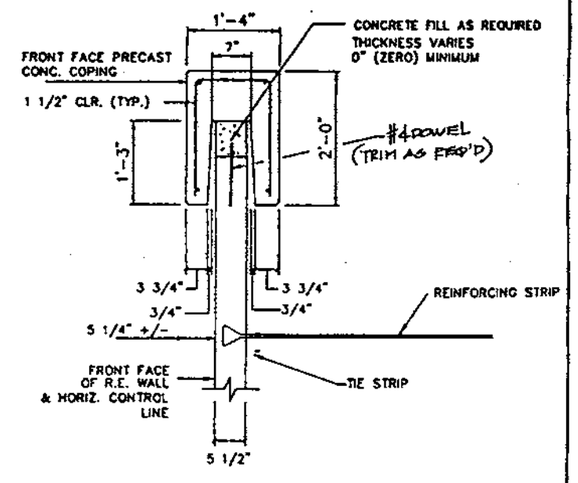

PRECAST COPING DETAIL
(6) SCALE: 1" = 1'-0"

This drawing contains information proprietary to The Reinforced Earth Company, and is being furnished for the use of F.D.O.T. only in connection with this project, and the information contained is not to be transmitted to any other organization unless specifically authorized in writing by The Reinforced Earth Company. The Reinforced Earth Company is exclusive licensee in the United States under patents issued to Henri Vidal, and the furnishing of this drawing does not constitute an expressed or implied license under the Vidal patents.

The design contained on these drawings is based on information provided by the owner. On the basis of this information, The Reinforced Earth Company has designed, and is responsible for the internal stability of the structure only. External stability including foundation and slope stability, is the responsibility of the owner.

CERTIFIED WITH RESPECT TO INTERNAL STABILITY OF REINFORCED EARTH STRUCTURES ONLY

REVISIONS

Date	By	No.	Description	Date	By	No.	Description

	Names	Dates
Drawn by	AO	6/27/95
Checked by		
Designed by	AO	6/27/95
Checked by		
Engineering Manager		

The Reinforced Earth Company
reinforced earth
2010 Corporate Ridge
Suite 1000
McLean, Virginia 22102
(703) 821-1175

"REINFORCED EARTH" is the registered trademark of The Reinforced Earth Company.

PROJECT STATUS

PRELIMINARY FOR REVIEW 6/27/95 | PRELIMINARY FOR BIDDING _____ | FINAL FOR CONSTRUCTION _____

FLORIDA DEPARTMENT OF TRANSPORTATION
STRUCTURES DESIGN OFFICE

ROAD NO.	COUNTY	PROJECT NO.
SR 414	SEMINOLE	77002-3505

Sheet Title: COPING DETAILS

Project Name: S.R. 414 OVER S.R. 434

Revision No. | Scale | Drawing No. OF | RECO Proj. No.

FED. ROAD DIV. NO.	STATE	PROJECT NO.	FISCAL YEAR	SHEET NO.
3	FLA.		W	19

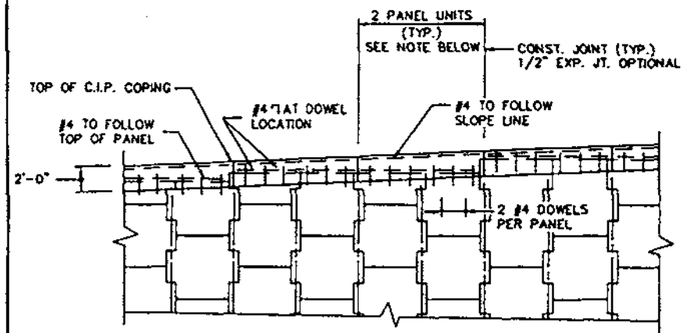

NOTE:
JOINTS IN COPING SHALL BE AT 2 PANEL INTERVALS AND COINCIDE APPROXIMATELY WITH PANEL JOINTS. REINFORCING STEEL SHALL BE STOPPED 2" SHORT OF EITHER SIDE OF THE CONSTRUCTION OR EXPANSION JOINTS.

C.I.P. COPING – PARTIAL ELEVATION

SCALE: 3/16" = 1'-0"

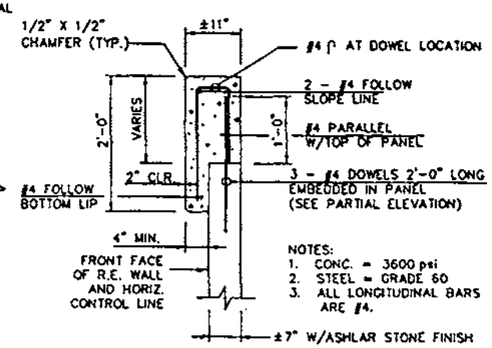

NOTES:
1. CONC. = 3600 psi
2. STEEL = GRADE 60
3. ALL LONGITUDINAL BARS ARE #4.

C.I.P. CONC. COPING DETAIL

SCALE: 1" = 1'-0"

NOTE:
THIS SECTION DETAIL IS VOID WHEN THE PRECAST COPING OPTION IS USED WITH SHORT C.I.P. SECTIONS.

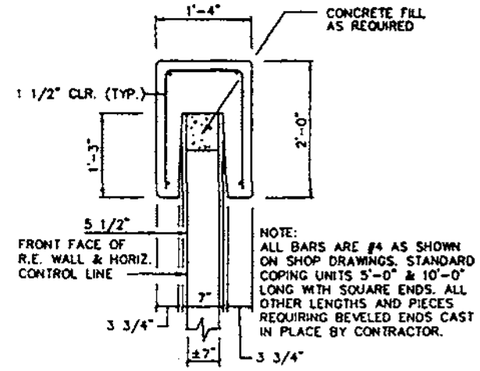

NOTE:
ALL BARS ARE #4 AS SHOWN ON SHOP DRAWINGS. STANDARD COPING UNITS 5'-0" & 10'-0" LONG WITH SQUARE ENDS. ALL OTHER LENGTHS AND PIECES REQUIRING BEVELED ENDS CAST IN PLACE BY CONTRACTOR.

OPTIONAL PRECAST COPING – SECTION DETAIL

SCALE: 1" = 1'-0"

NOTE:
IF PRECAST COPING IS USED, THAN SHORT SECTIONS OF C.I.P. COPING SHALL BE DIMENSIONED AND PROVIDED WITH REINFORCEMENT AS SHOWN IN THIS PRECAST SECTION DETAIL.

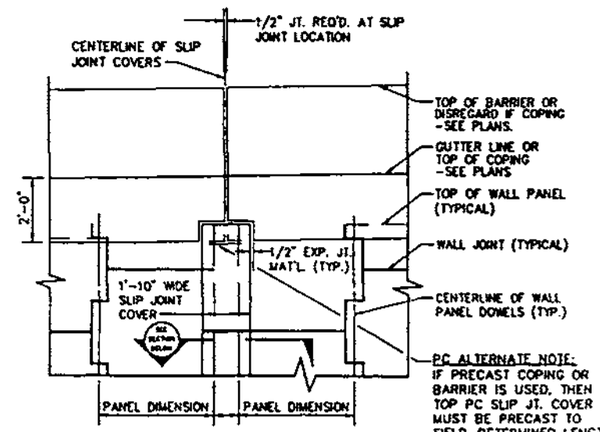

PC ALTERNATE NOTE:
IF PRECAST COPING OR BARRIER IS USED, THEN TOP PC SLIP JT. COVER MUST BE PRECAST TO FIELD-DETERMINED LENGTH, ALLOWING 1/2" MIN. JOINT UNDER BAR. OR COP. LIP.

SLIP JOINT – PARTIAL ELEVATION

SCALE: 3/8" = 1'-0"

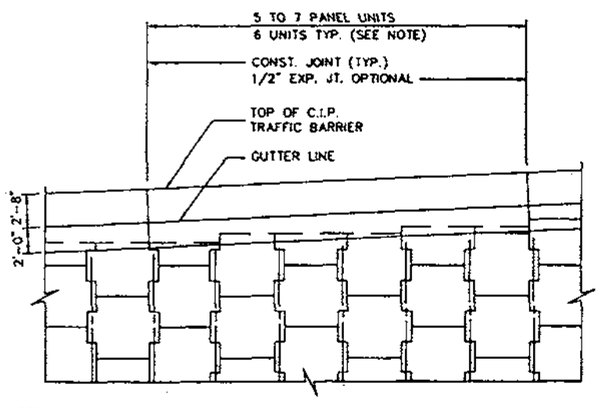

NOTE:
SEE WALL ELEVATIONS FOR RECCOMENDED JOINTS IN C.I.P. BARRIER. BARRIER JOINTS MUST COINCIDE WITH PANEL JOINT ON FRONT FACE WHERE BOTTOM OF LIP INTERSECTS WITH PANEL JOINT. JOINTS IN MOMENT SLAB MAY BE IN ANY WHOLE INCREMENT OF BARRIER JOINT SPACING (MINIMUM SPACING AS SHOWN ABOVE).

C.I.P TRAFFIC BARRIER – PARTIAL ELEVATION

SCALE: 3/16" = 1'-0"

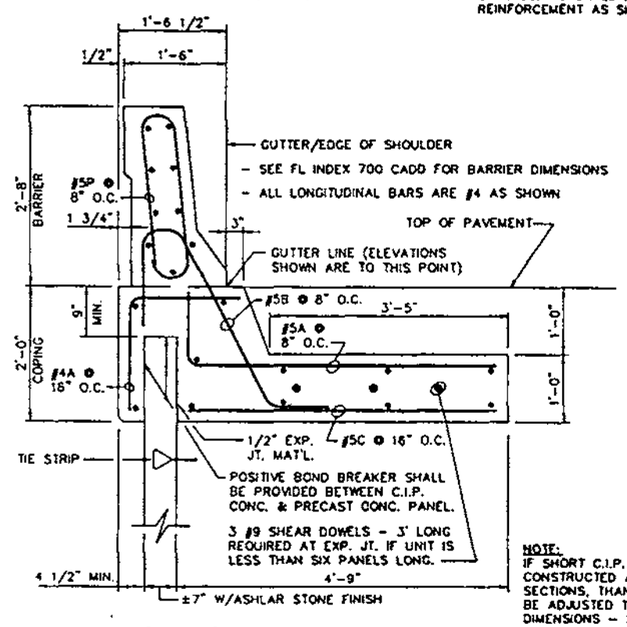

C.I.P. CONC. TRAFFIC BARRIER

SCALE: 1" = 1'-0"

NOTE:
IF SHORT C.I.P. BARRIER SECTIONS ARE TO BE CONSTRUCTED ADJACIENT TO PRECAST BARRIER SECTIONS, THAN THIS SECTION'S DIMENSIONS SHALL BE ADJUSTED TO CONFORM TO THE PRECAST BARRIER DIMENSIONS – FORM TRANSITION AT BRIDGE BARRIER.

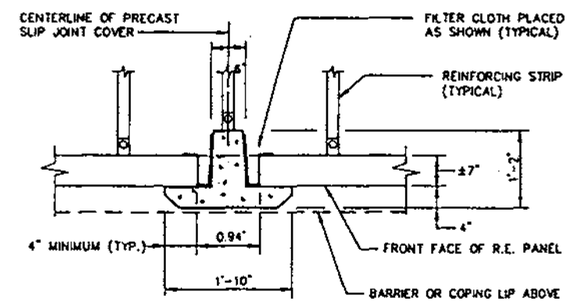

SLIP JOINT COVER DETAIL (PLAIN FINISH)

SCALE: 1" = 1'-0"

This drawing contains information proprietary to The Reinforced Earth Company, and is being furnished for the use of F.D.O.T. only in connection with this project, and the information contained is not to be transmitted to any other organization unless specifically authorized in writing by The Reinforced Earth Company. The Reinforced Earth Company is exclusive licensee in the United States under patents issued to Henri Vidal, and the furnishing of this drawing does not constitute an expressed or implied license under the Vidal patents.

The design contained on these drawings is based on information provided by the owner. On the basis of this information, The Reinforced Earth Company has designed, and is responsible for the internal stability of the structure only. External stability including foundation and slope stability, is the responsibility of the owner.

CERTIFIED WITH RESPECT TO INTERNAL STABILITY OF REINFORCED EARTH STRUCTURES ONLY

REVISIONS							
Date	By	No.	Description	Date	By	No.	Description

	Names	Dates
Drawn by	AO	6/27/95
Checked by		
Designed by	AO	6/27/95
Checked by		
Engineering Manager		

The Reinforced Earth Company
reinforced earth
8614 Westwood Center Drive
Suite 1100
Vienna, Virginia 22182
(703) 821-1175 Fax 821-1815

"REINFORCED EARTH" is the registered trademark of The Reinforced Earth Company.

PROJECT STATUS

PRELIMINARY FOR REVIEW 6/27/95 | PRELIMINARY FOR BIDDING _____ | FINAL FOR CONSTRUCTION _____

FLORIDA DEPARTMENT OF TRANSPORTATION
STRUCTURES DESIGN OFFICE

ROAD NO.	COUNTY	PROJECT NO.
SR 414	SEMINOLE	77002-3505

Sheet Title: DETAILS

Project Name: S.R. 414 OVER S.R. 434

Revision No. | Scale | Drawing No. OF | RECO Proj. No.

FED. ROAD DIV. NO.	STATE	PROJECT NO.	FISCAL YEAR	SHEET NO.
3	FLA.		W	20

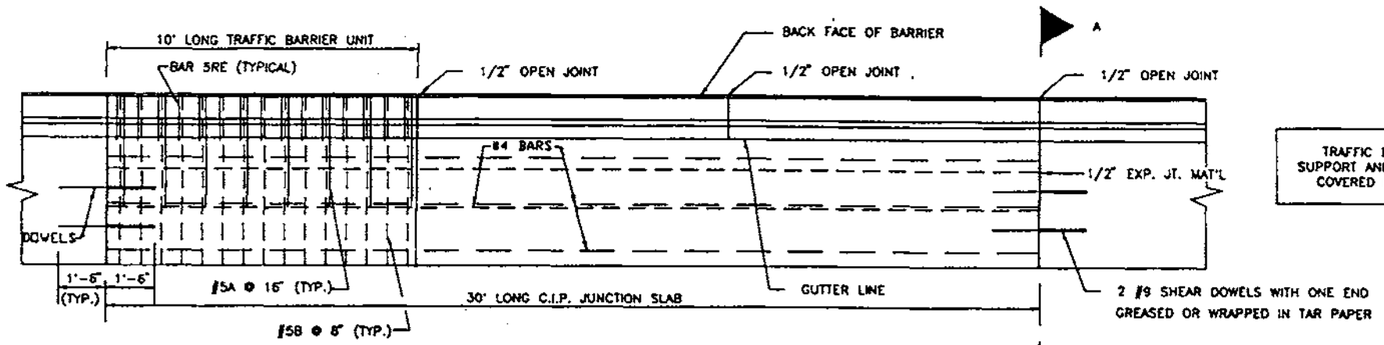

PRECAST TRAFFIC BARRIER
PLAN VIEW
SCALE: 3/8" = 1'-0"

TRAFFIC BARRIER ELEMENT, METHOD OF SUPPORT AND METHOD OF CONSTRUCTION ARE COVERED BY U.S. PATENT NO. 4,494,892

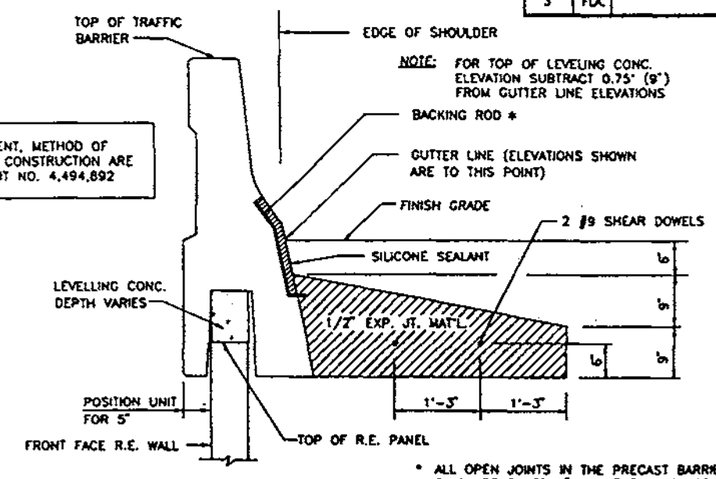

SECTION A-A
SCALE: 1"=1'-0"

* ALL OPEN JOINTS IN THE PRECAST BARRIER SHALL BE FILLED 6" ABOVE FINISHED GRADE WITH 3/4" BACKING ROD AND CAULKED WITH SILICONE SEALANT. MATERIALS BY CONTRACTOR.

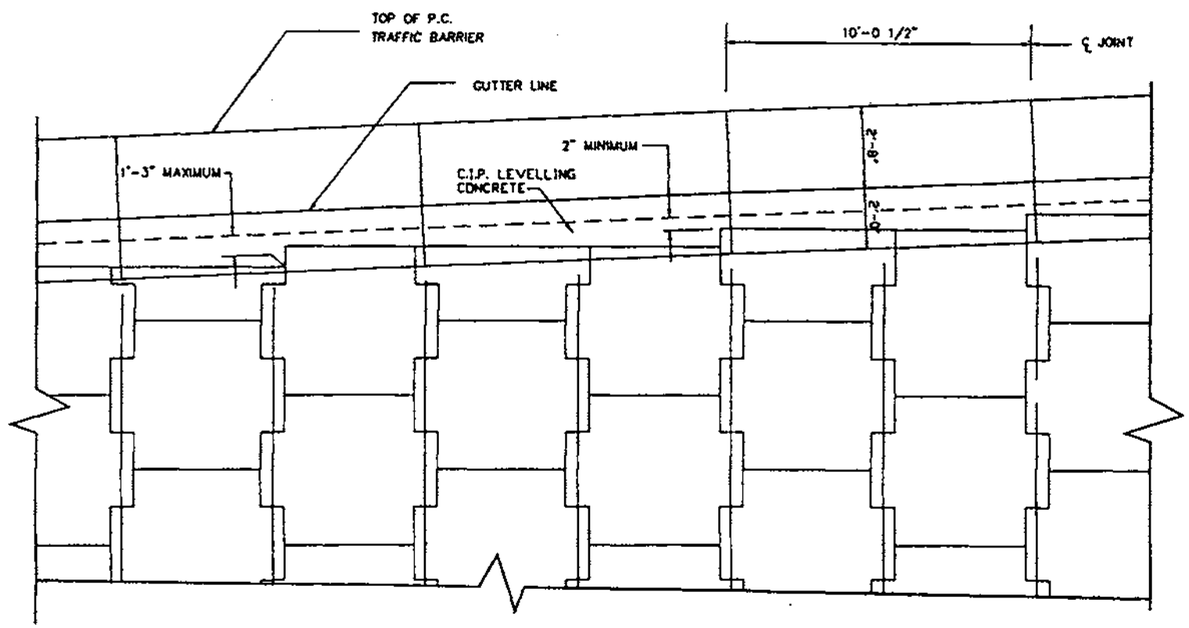

PRECAST TRAFFIC BARRIER
PARTIAL ELEVATION
SCALE: 3/8" = 1'-0"

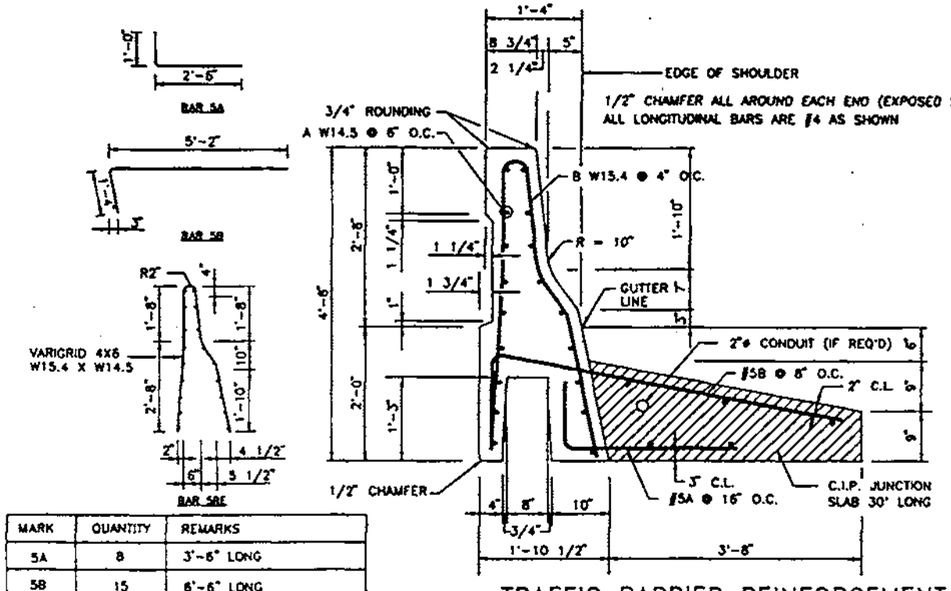

MARK	QUANTITY	REMARKS
5A	8	3'-6" LONG
5B	15	6'-6" LONG
A	VARIGRID	W14.5 @ 6" O.C.
B	VARIGRID	W15.4 @ 4" O.C.

TRAFFIC BARRIER REINFORCEMENT
SCALE: 1"=1'-0"

This drawing contains information proprietary to The Reinforced Earth Company, and is furnished for the use of F.D.O.T. only in connection this project, and the information contained is not to be transmitted to any other utilization unless specifically authorized in writing by The Reinforced Earth Company. The Reinforced Earth Company is exclusive licensee in the United States under patents issued to Henri Vidal, and the furnishing of this drawing does not constitute an expressed or implied license under the Vidal patents.

The design contained on these drawings is based on information provided by the owner. On the basis of this information, The Reinforced Earth Company has designed, and is responsible for the internal stability of the structure only. External stability including foundation and slope stability, is the responsibility of the owner.

CERTIFIED WITH RESPECT TO INTERNAL STABILITY OF REINFORCED EARTH STRUCTURES ONLY

REVISIONS							
Date	By	No.	Description	Date	By	No.	Description

	Names	Dates
Drawn by	AO	6/27/95
Checked by		
Designed by	AO	6/27/95
Checked by		
Engineering Manager		

The Reinforced Earth Company
reinforced earth
8614 Westwood Center Drive
Suite 1100
Vienna, Virginia 22182
(703) 821-1175 Fax 821-1815

"REINFORCED EARTH" is the registered trademark of The Reinforced Earth Company.

PROJECT STATUS

PRELIMINARY FOR REVIEW 6/27/95 | PRELIMINARY FOR BIDDING _____ | FINAL FOR CONSTRUCTION _____

FLORIDA DEPARTMENT OF TRANSPORTATION
STRUCTURES DESIGN OFFICE

Sheet Title: OPTIONAL PRECAST BARRIER DETAILS

ROAD NO.	COUNTY	PROJECT NO.
SR 414	SEMINOLE	77002-3505

Project Name: S.R. 414 OVER S.R. 434

Revision No. | Scale | Drawing No. OF | RECO Proj. No.

FED. ROAD DIV. NO.	STATE	PROJECT NO.	FISCAL YEAR	SHEET NO.
3	FLA.			W-21

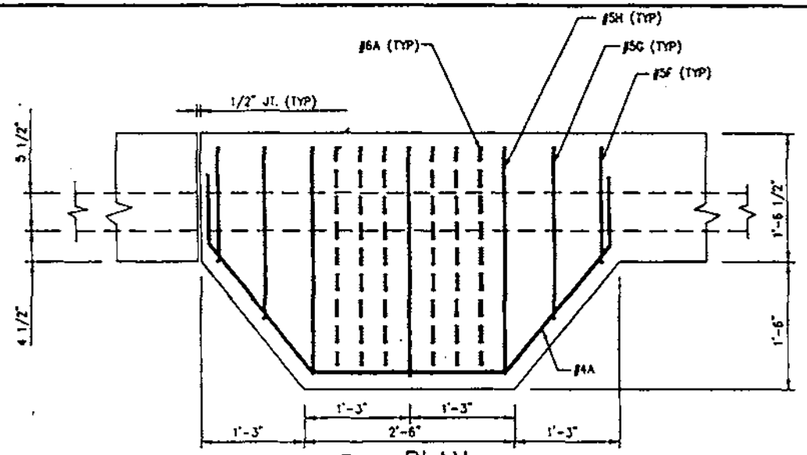

1 PLAN
SCALE: 1" = 1'-0"

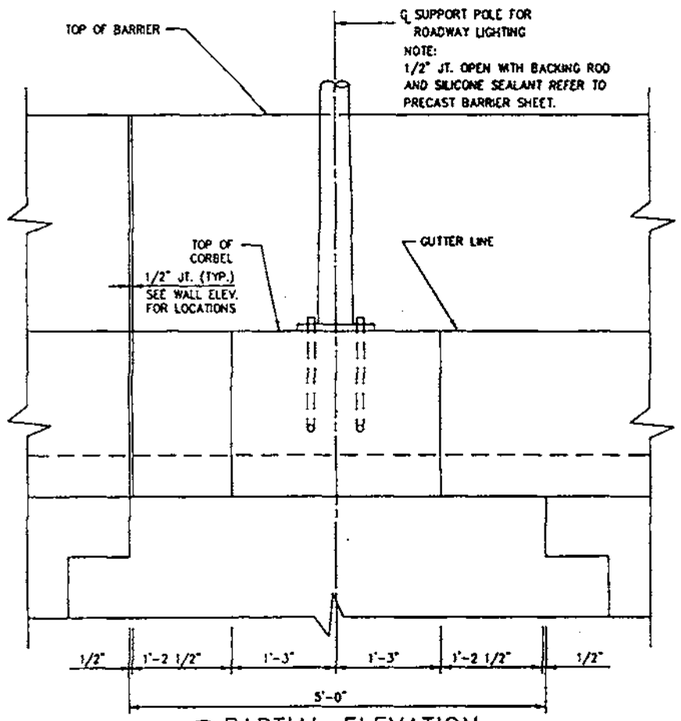

3 PARTIAL ELEVATION
SCALE: 1" = 1'-0"

REBAR SCHEDULE	
MARK	QTY.
4A	3
5C	3
5D	7
5E	3
5F	2
5G	2
5H	3
5P	7
6A	6

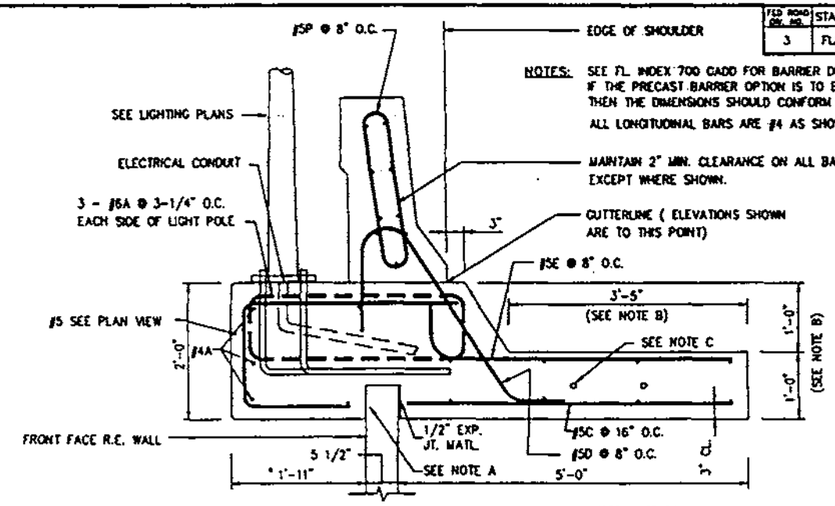

NOTES: SEE FL. INDEX 700 CADD FOR BARRIER DIMENSIONS, DATED 2-89. IF THE PRECAST BARRIER OPTION IS TO BE USED ON THIS PROJECT, THEN THE DIMENSIONS SHOULD CONFORM TO ADJACENT PRECAST UNITS.
ALL LONGITUDINAL BARS ARE #4 AS SHOWN
MAINTAIN 2" MIN. CLEARANCE ON ALL BARS, EXCEPT WHERE SHOWN.

(SEE NOTE B)
(6-PANEL UNIT STD)
(5-PANEL UNIT MIN)

* DIMENSION MAY VARY AS REQUIRED FOR LIGHT POLE BASE PLATE.

NOTE A:
POSITIVE BOND BREAKER SHALL BE PROVIDED BETWEEN CAST IN PLACE CONC. AND PRECAST CONC. PANEL.

NOTE B:
THE BARRIER JUNCTION SLAB SHALL HAVE THESE DIMENSIONS FOR ONE PRECAST UNIT EITHER SIDE OF LIGHT POLE BARRIER LONGITUDINAL BARS SHALL BE AS SHOWN ABOVE

NOTE C:
2 - #9 SHEAR DOWELS - 3'-0" LONG
REFER TO PRECAST BARRIER SHEET

2 BARRIER DETAIL @ LIGHT POLE
SCALE: 1" = 1'-0"

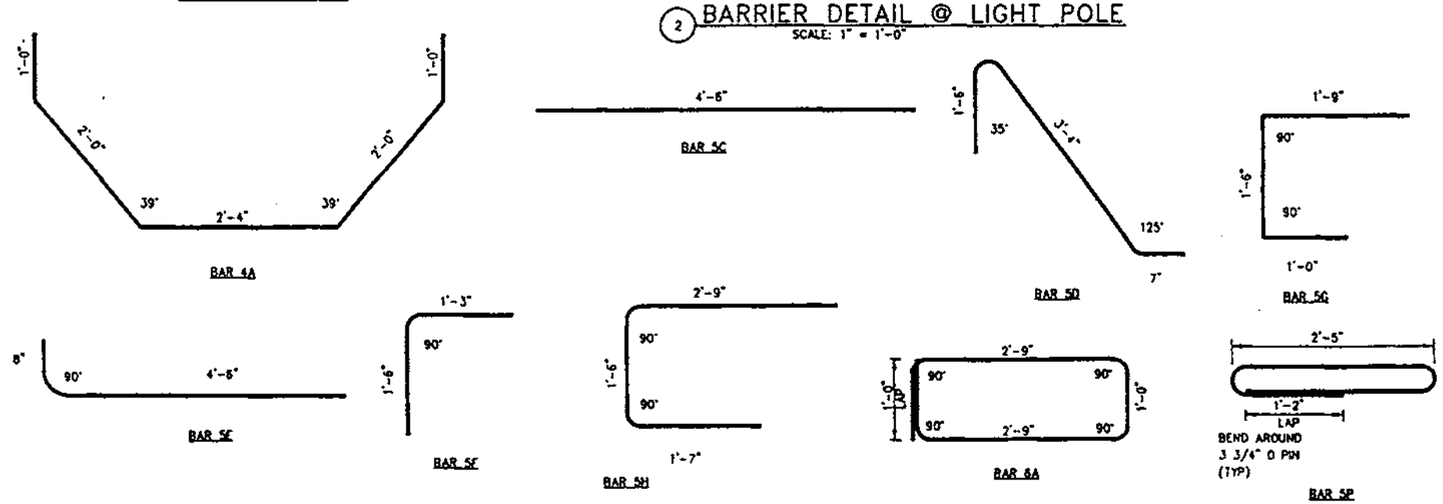

4 BAR BENDING DETAILS
SCALE: 1" = 1'-0"

This drawing contains information proprietary to The Reinforced Earth Company, and is being furnished for the use of F.D.O.T. only in connection with this project, and the information contained is not to be transmitted to any other organization unless specifically authorized in writing by The Reinforced Earth Company. The Reinforced Earth Company is exclusive licensee in the United States under patents issued to Henri Vidal, and the furnishing of this drawing does not constitute an expressed or implied license under the Vidal patents.

The design contained on these drawings is based on information provided by the owner. On the basis of this information, The Reinforced Earth Company has designed, and is responsible for the internal stability of the structure only. External stability including foundation and slope stability, is the responsibility of the owner.

CERTIFIED WITH RESPECT TO INTERNAL STABILITY OF REINFORCED EARTH STRUCTURES ONLY

REVISIONS

Date	By	No.	Description	Date	By	No.	Description

	Names	Dates
Drawn by	AO	6/27/95
Checked by		
Designed by	AO	6/27/95
Checked by		
Engineering Manager		

The Reinforced Earth Company
reinforced earth
8614 Westwood Center Drive
Suite 1100
Vienna, Virginia 22182
(703) 821-1175 Fax 821-1818

"REINFORCED EARTH" is the registered trademark of The Reinforced Earth Company.

PROJECT STATUS

PRELIMINARY FOR REVIEW 6/27/95 | PRELIMINARY FOR BIDDING _____ | FINAL FOR CONSTRUCTION _____

FLORIDA DEPARTMENT OF TRANSPORTATION
STRUCTURES DESIGN OFFICE

ROAD NO.	COUNTY	PROJECT NO.
SR 414	SEMINOLE	77002-3505

Sheet Title: LIGHT POLE BARRIER DETAILS

Project Name: S.R. 414 OVER S.R. 434

Revision No. | Scale | Drawing No. OF | RECO Proj. No.

FED. ROAD DIV. NO.	STATE	PROJECT NO.	FISCAL YEAR	SHEET NO.
3	FLA.		W	22

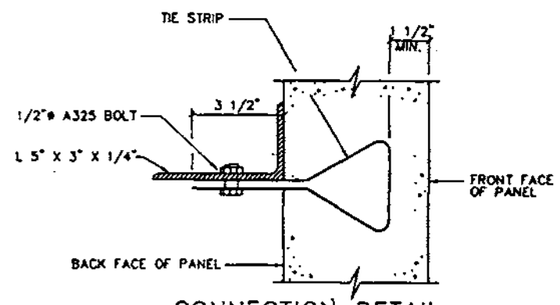

CONNECTION DETAIL
ANGLE BOLTED TO TIE STRIP
1 SCALE: 3/8" = 1"

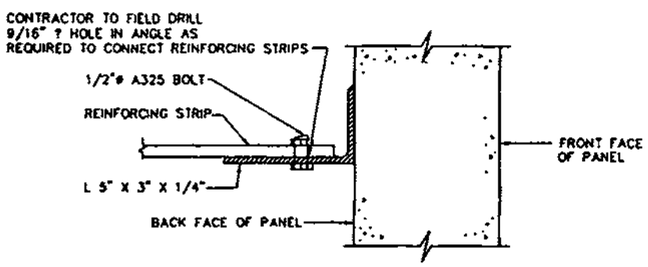

CONNECTION DETAIL
SHIFTED REINF. STRIP BOLTED TO ANGLE
2 SCALE: 3/8" = 1"

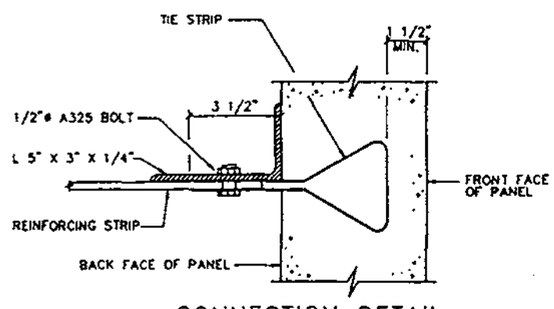

CONNECTION DETAIL
ANGLE BOLTED TO TIE STRIP WITH REINF. STRIP
3 SCALE: 3/8" = 1"

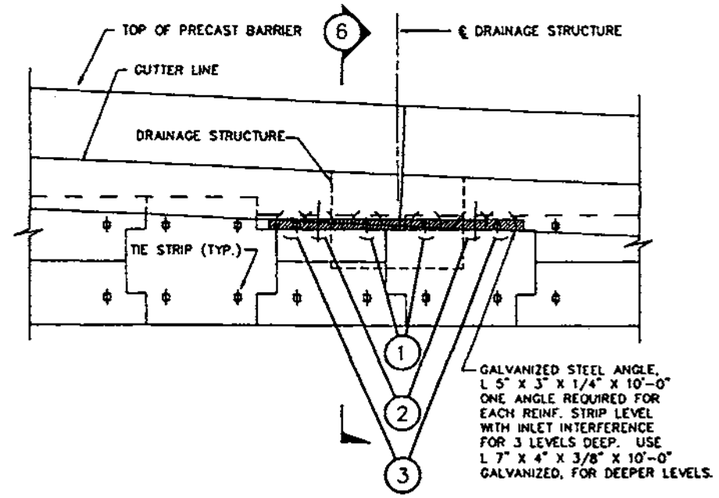

PARTIAL ELEVATION
4 SCALE: 1/2" = 1'-0"

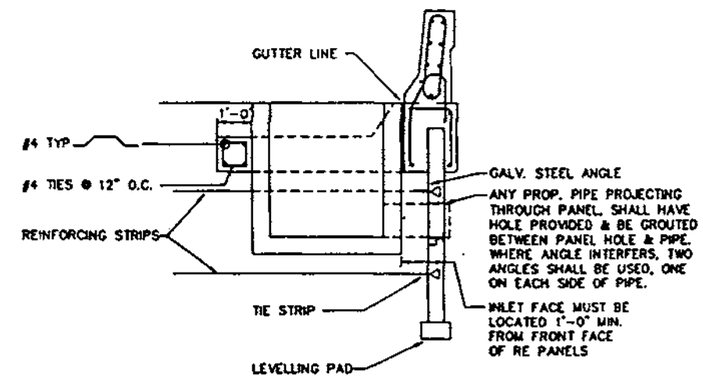

SECTION AT INLET
6 SCALE: 1/2" = 1'-0"

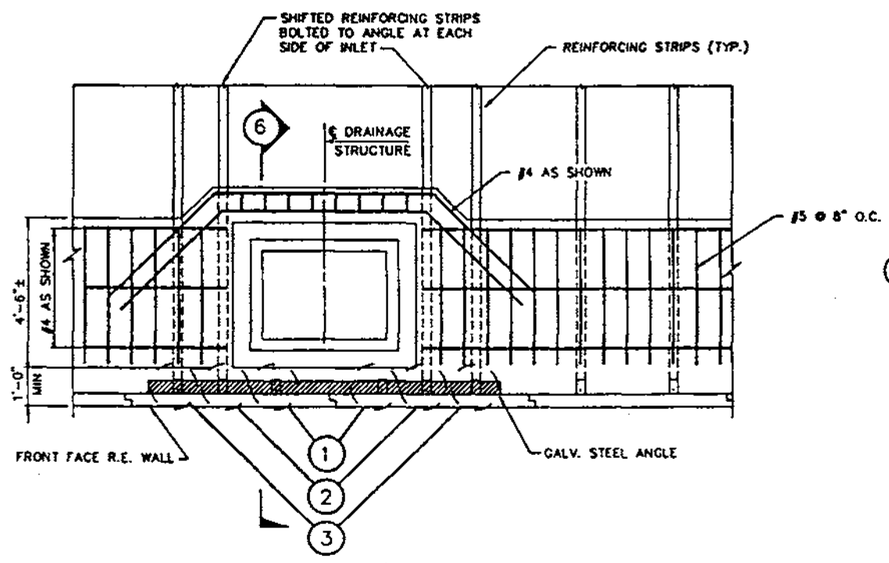

PARTIAL PLAN
5 SCALE: 1/2" = 1'-0"

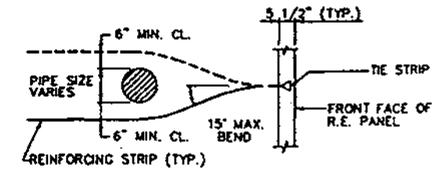

NOTE : BEND TO BE AS GRADUAL AS POSSIBLE.

TYPICAL STRIP BENDING DETAIL AT ANY PROPOSED & EXISTING PIPES
7 SCALE: 1/2" = 1'-0"

This drawing contains information proprietary to The Reinforced Earth Company, and is being furnished for the use of F.D.O.T. only in connection with this project, and the information contained is not to be transmitted to any other organization unless specifically authorized in writing by The Reinforced Earth Company. The Reinforced Earth Company is exclusive licensee in the United States under patents issued to Henri Vidal, and the furnishing of this drawing does not constitute an expressed or implied license under the Vidal patents.

The design contained on these drawings is based on information provided by the owner. On the basis of this information, The Reinforced Earth Company has designed, and is responsible for the internal stability of the structure only. External stability including foundation and slope stability, is the responsibility of the owner.

CERTIFIED WITH RESPECT TO INTERNAL STABILITY OF REINFORCED EARTH STRUCTURES ONLY

REVISIONS

Date	By	No.	Description	Date	By	No.	Description

	Names	Dates
Drawn by	AO	6/27/95
Checked by		
Designed by	AO	6/27/95
Checked by		
Engineering Manager		

The Reinforced Earth Company
reinforced earth
2010 Corporate Ridge
Suite 1000
McLean, Virginia 22102
(703) 821-1175
"REINFORCED EARTH" is the registered trademark of The Reinforced Earth Company.

PROJECT STATUS
PRELIMINARY FOR REVIEW 6/27/95 | PRELIMINARY FOR BIDDING _____ | FINAL FOR CONSTRUCTION _____

FLORIDA DEPARTMENT OF TRANSPORTATION
STRUCTURES DESIGN OFFICE

ROAD NO.	COUNTY	PROJECT NO.
SR 414	SEMINOLE	77002-3505

Sheet Title: INLET DETAILS WITH C.I.P. BARRIER & ASPHALT PAVING
Project Name: S.R. 414 OVER S.R. 434

Revision No.
Scale
Drawing No.
OF
RECD Proj. No.

FED. ROAD DIV. NO.	STATE	PROJECT NO.	FISCAL YEAR	SHEET NO.
3	FLA.			W-23

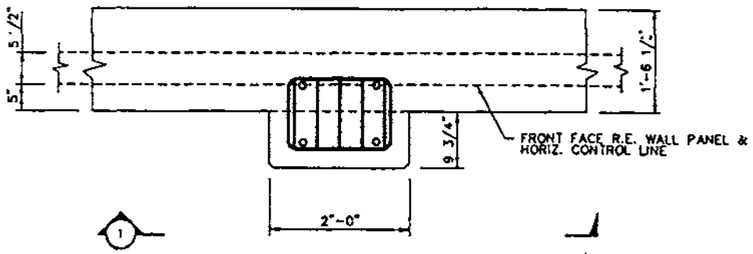

2 PLAN
SCALE: 1" = 1'-0"

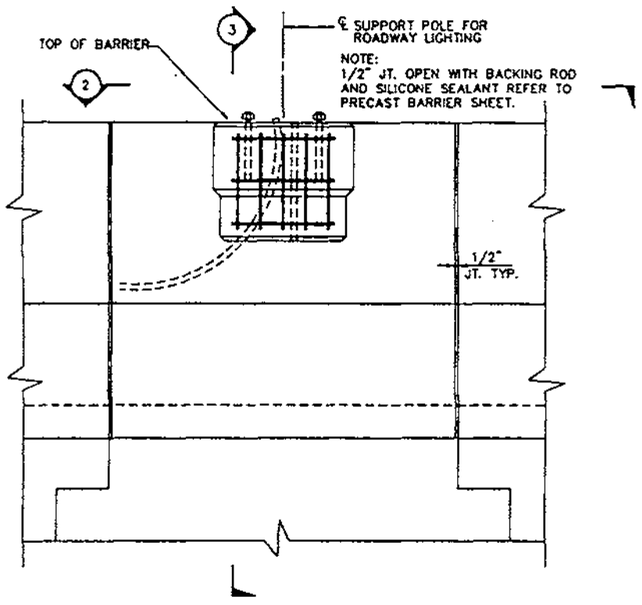

1 PARTIAL ELEVATION
SCALE: 1" = 1'-0"

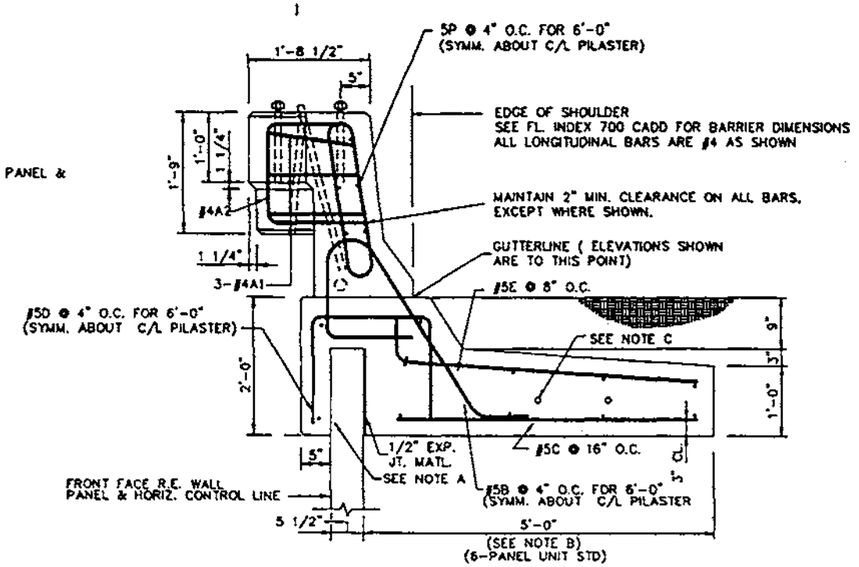

3 BARRIER DETAIL @ LIGHT POLE
SCALE: 1" = 1'-0"

NOTES:

A. POSITIVE BOND BREAKER SHALL BE PROVIDED BETWEEN CAST IN PLACE CONC. AND PRECAST CONC. PANEL

B. THE BARRIER JUNCTION SLAB SHALL HAVE THESE DIMENSIONS FOR ONE PRECAST UNIT EITHER SIDE OF LIGHT POLE BARRIER LONGITUDINAL BARS SHALL BE AS SHOWN ABOVE

C. 2 - #9 SHEAR DOWELS - 3'-0" LONG REFER TO PRECAST BARRIER SHEET

REBAR SCHEDULE	
MARK	QTY.
4A1	3
4A2	5
5B	18
5C	4
5D	18
5E	9
5P	18

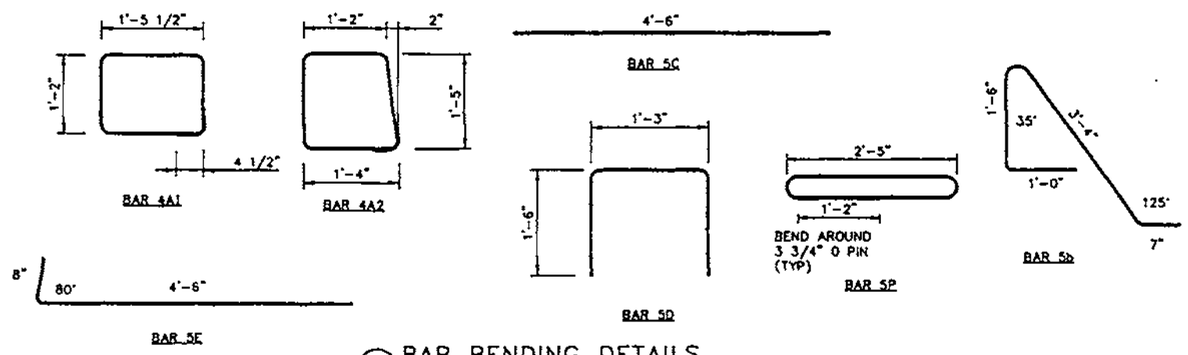

4 BAR BENDING DETAILS
SCALE: 1" = 1'-0"

This drawing contains information proprietary to The Reinforced Earth Company, and is being furnished for the use of F.D.O.T. only in connection with this project, and the information contained is not to be transmitted to any other organization unless specifically authorized in writing by The Reinforced Earth Company. The Reinforced Earth Company is exclusive licensee in the United States under patents issued to Henri Vidal, and the furnishing of this drawing does not constitute an expressed or implied license under the Vidal patents.

The design contained on these drawings is based on information provided by the owner. On the basis of this information, The Reinforced Earth Company has designed, and is responsible for the internal stability of the structure only. External stability including foundation and slope stability, is the responsibility of the owner.

CERTIFIED WITH RESPECT TO INTERNAL STABILITY OF REINFORCED EARTH STRUCTURES ONLY

REVISIONS

Date	By	No.	Description	Date	By	No.	Description

	Names	Dates
Drawn by	AO	6/27/95
Checked by		
Designed by	AO	6/27/95
Checked by		
Engineering Manager		

The Reinforced Earth Company
reinforced earth
2010 Corporate Ridge
Suite 1000
McLean, Virginia 22102
(703) 821-1175

"REINFORCED EARTH" is the registered trademark of The Reinforced Earth Company.

PROJECT STATUS

PRELIMINARY FOR REVIEW 6/27/95 | PRELIMINARY FOR BIDDING _____ | FINAL FOR CONSTRUCTION _____

FLORIDA DEPARTMENT OF TRANSPORTATION
STRUCTURES DESIGN OFFICE

ROAD NO.	COUNTY	PROJECT NO.
SR 414	SEMINOLE	77002-3505

Sheet Title: LIGHT POLE DETAILS

Project Name: S.R. 414 OVER S.R. 434

Revision No. | Scale | Drawing No. OF | RECO Proj. No.

FED ROAD DIV. NO.	STATE	PROJECT NO.	FISCAL YEAR	SHEET NO.
3	FLA.		W	24

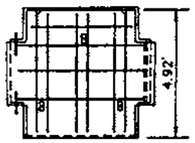

A-3-R5

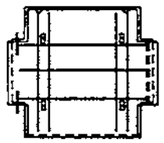

A-4-R4

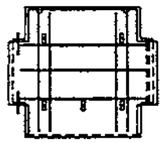

A-5-R4

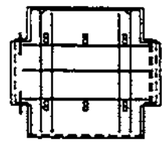

A-6-R4

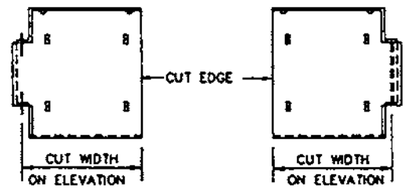

AL-4-R4 AR-4-R4

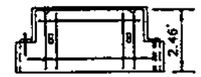

B-2-R4

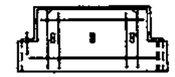

B-3-R4

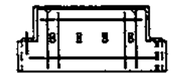

B-4-R4

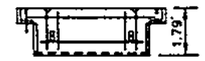

C-2-R4

C-3-R4

C-4-R4

D-2-R4

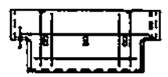

D-3-R4

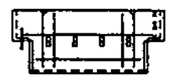

D-4-R4

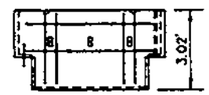

E-3-R4

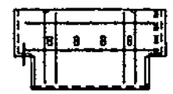

E-4-R4

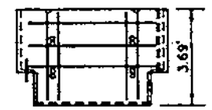

F-4-R4

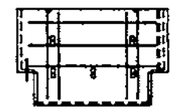

F-5-R4

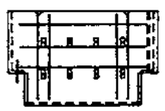

F-8-R4

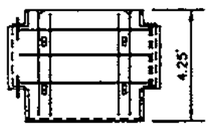

G-4-R4

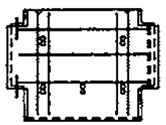

G-5-R4

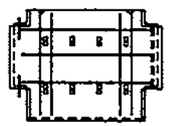

G-8-R4

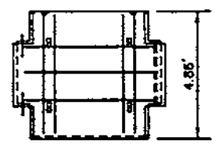

H-4-R4

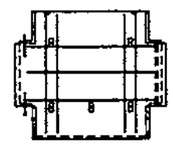

H-5-R4

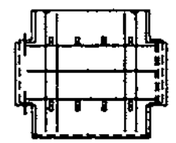

H-8-R4

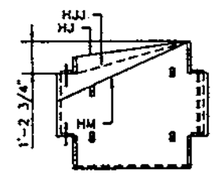

HJ-4-R4

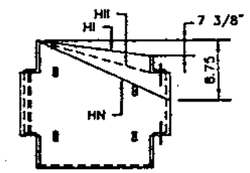

HI-4-R4

SLOPED TOP PANELS
"H" PANEL USED FOR ILLUSTRATION ONLY.

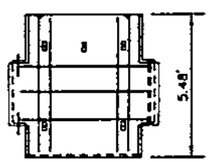

K-5-R4

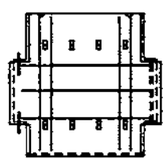

K-8-R4

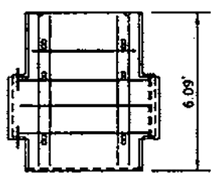

L-6-R4

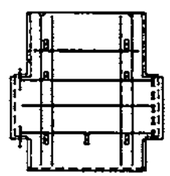

L-7-R4

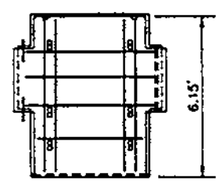

P-6-R4

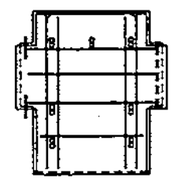

P-7-R4

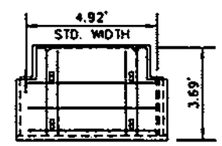

Q-4-R4

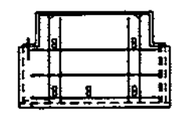

Q-5-R4

ALL PANELS ARE SHOWN BACK FACE VIEW
(SEE SHEET FOR STANDARD PANEL DETAILS.)

TIE STRIP LOCATION

R4, R5 — VERTICAL BARS ARE #3 AS SHOWN; HORIZONTAL BARS ARE #4 AS SHOWN
R6 — VERTICAL BARS ARE 6-#3; HORIZONTAL BARS ARE 4-#4
R7 — VERTICAL BARS ARE 6-#4; HORIZONTAL BARS ARE 4-#6

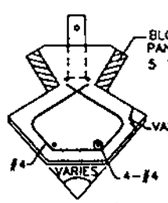

NOTE
HEIGHT OF CORNER ELEMENTS AND SLIP JOINTS SHOULD MATCH WITH PANEL HEIGHT.

CORNER ELEMENT
SIZE VARIES WITH ANGLES
N.T.S.

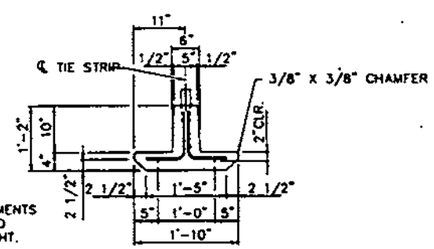

SLIP JOINT
N.T.S.

This drawing contains information proprietary to The Reinforced Earth Company, and is being furnished for the use of F.D.O.T. only in connection with this project, and the information contained is not to be transmitted to any other organization unless specifically authorized in writing by The Reinforced Earth Company. The Reinforced Earth Company is exclusive licensee in the United States under patents issued to Henri Vidal, and the furnishing of this drawing does not constitute an expressed or implied license under the Vidal patents.

The design contained on these drawings is based on information provided by the owner. On the basis of this information, The Reinforced Earth Company has designed, and is responsible for the internal stability of the structure only. External stability including foundation and slope stability, is the responsibility of the owner.

CERTIFIED WITH RESPECT TO INTERNAL STABILITY OF REINFORCED EARTH STRUCTURES ONLY

REVISIONS

Date	By	No.	Description	Date	By	No.	Description

	Names	Dates
Drawn by	AO	6/27/95
Checked by		
Designed by	AO	6/27/95
Checked by		
Engineering Manager		

The Reinforced Earth Company
reinforced earth
2010 Corporate Ridge
Suite 1000
McLean, Virginia 22102
(703) 821-1175

"REINFORCED EARTH" is the registered trademark of The Reinforced Earth Company.

PROJECT STATUS
PRELIMINARY FOR REVIEW 6/27/95 | PRELIMINARY FOR BIDDING _____ | FINAL FOR CONSTRUCTION _____

FLORIDA DEPARTMENT OF TRANSPORTATION
STRUCTURES DESIGN OFFICE

ROAD NO.	COUNTY	PROJECT NO.
SR 414	SEMINOLE	77002-3505

Revision No.
Scale
Sheet Title: STANDARD R.E. PANELS
Drawing No. OF
Project Name: S.R. 414 OVER S.R. 434
RECO Proj. No.

FED. ROAD DIV. NO.	STATE	PROJECT NO.	FISCAL YEAR	SHEET NO.
3	FLA.		W	25

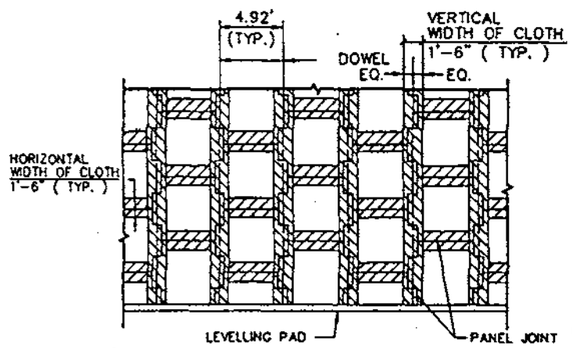

NOTE:
STRIPS OF FILTER CLOTH SHALL BE PLACED ON BACK FACE OF PANEL, OVER PANEL JOINTS. FILTER CLOTH SHALL BE ADHERED TO BACK FACE OF PANELS USING AN ADHESIVE COMPOUND SUPPLIED BY THE REINFORCED EARTH COMPANY.

FILTER CLOTH DETAIL
PARTIAL ELEVATION – BACK FACE
SCALE: 3/16" = 1'-0"

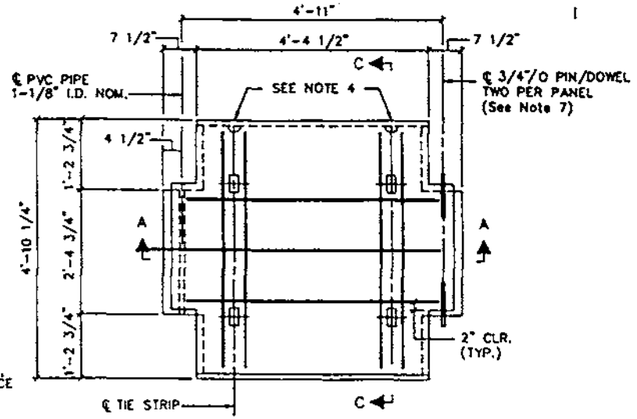

PANEL TYPE "A"
WITH R4 REINFORCEMENT
FRONT VIEW
SCALE: 3/4" = 1'-0"

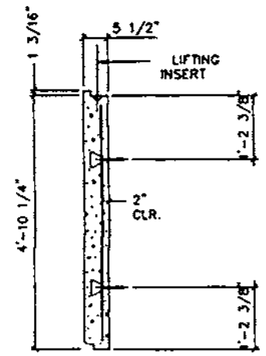

SECTION C–C
SCALE: 3/4" = 1'-0"

PANEL THICKNESS	REINFORCEMENT DESIGNATION	PANEL REINFORCEMENT A_s (IN²)	MAXIMUM ALLOWABLE HORIZONTAL STRESS AT FACING (KSF)
5 1/2"	R4	4-#3 VERTICAL 3-#4 HORIZONTAL	1.19
	R6	6-#3 VERTICAL 4-#4 HORIZONTAL	1.46

NOTES:

1. REINFORCING STEEL TO BE A615 GRADE 60.
2. 3/8" x 3/8" CHAMFER SHALL BE PROVIDED ON ALL EXPOSED EDGES (FRONT FACE ONLY).
3. ALL PANEL TYPES AND OTHER RELATED ELEMENTS WILL BE DETAILED ON SHOP DRAWINGS.
4. ALL PANELS SHALL HAVE TWO LIFTING INSERTS OF ONE TON CAPACITY EACH.
5. PANEL DESIGN THICKNESS IS 5 1/2". THICKNESS OF CONCRETE MUST INCREASE TO ACCOMODATE ANY ARCHITECTURAL SURFACE FINISH THAT MAY BE SPECIFIED.
6. ACTUAL PANEL REINFORCEMENT FOR ALL PANEL TYPES ON THIS PROJECT IS DESIGNATED ABOVE. R4 ILLUSTRATED FOR INFORMATION ONLY.
7. EACH 3/4" Ø DOWEL SHALL HAVE A TYP. LENGTH OF 10". DOWELS MAY BE GALVANIZED STEEL OR PVC ROD. A SINGLE FULL LENGTH DOWEL MAY BE USED AT THE DISCRETION OF THE MANUFACTURER.

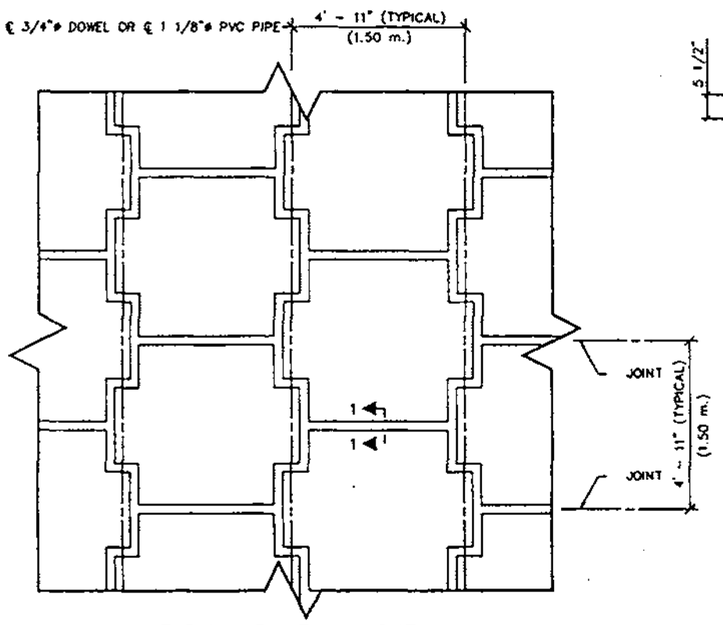

TYPICAL PANEL LAYOUT
PARTIAL ELEVATION – FRONT FACE
SCALE: 1/2" = 1'-0"

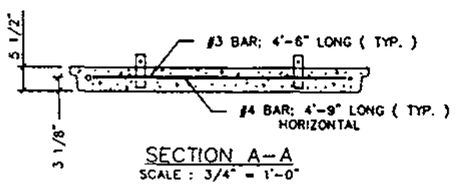

SECTION A–A
SCALE : 3/4" = 1'-0"

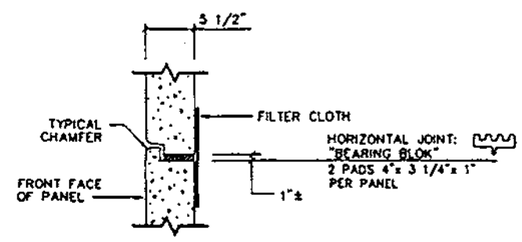

SECTION 1–1

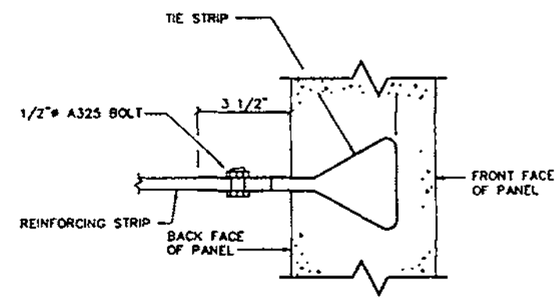

CONNECTION DETAIL
NO SCALE

This drawing contains information proprietary to The Reinforced Earth Company, and is being furnished for the use of F.D.O.T. only in connection with this project, and the information contained is not to be transmitted to any other organization unless specifically authorized in writing by The Reinforced Earth Company. The Reinforced Earth Company is exclusive licensee in the United States under patents issued to Henri Vidal, and the furnishing of this drawing does not constitute an expressed or implied license under the Vidal patents.

The design contained on these drawings is based on information provided by the owner. On the basis of this information, The Reinforced Earth Company has designed, and is responsible for the internal stability of the structure only. External stability including foundation and slope stability, is the responsibility of the owner.

CERTIFIED WITH RESPECT TO INTERNAL STABILITY OF REINFORCED EARTH STRUCTURES ONLY

REVISIONS

Date	By	No.	Description	Date	By	No.	Description

	Names	Dates
Drawn by	AO	6/27/95
Checked by		
Designed by	AO	6/27/95
Checked by		
Engineering Manager		

The Reinforced Earth Company
reinforced earth
2010 Corporate Ridge Suite 1000
McLean, Virginia 22102
(703) 821-1175

"REINFORCED EARTH" is the registered trademark of The Reinforced Earth Company.

PROJECT STATUS
PRELIMINARY FOR REVIEW 6/27/95 | PRELIMINARY FOR BIDDING _____ | FINAL FOR CONSTRUCTION _____

FLORIDA DEPARTMENT OF TRANSPORTATION
STRUCTURES DESIGN OFFICE

ROAD NO.	COUNTY	PROJECT NO.
SR 414	SEMINOLE	77002-3505

Sheet Title: STANDARD PANEL DETAILS
Project Name: S.R. 414 OVER S.R. 434

Revision No. | Scale | Drawing No. OF | RECO Proj. No.

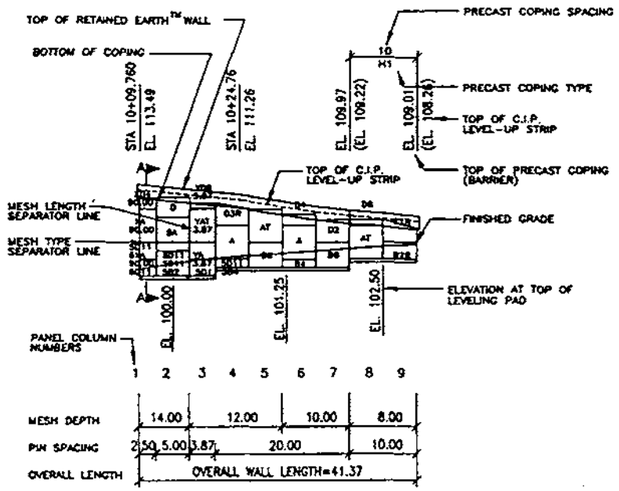

1 WALL ELEVATION KEY
FRONT FACE SHOWN

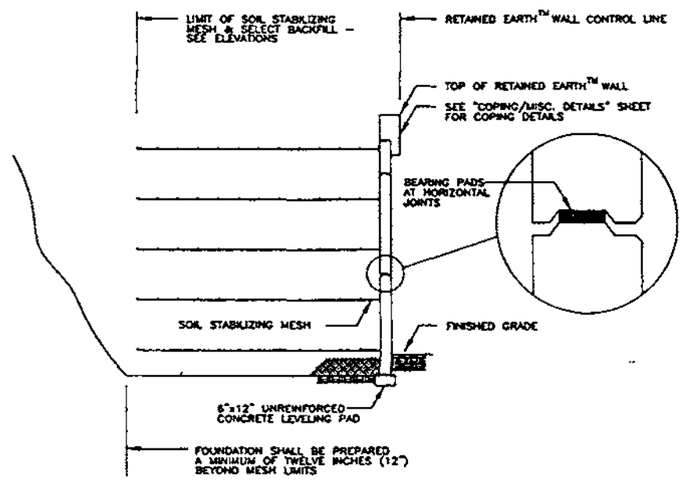

A WALL SECTION

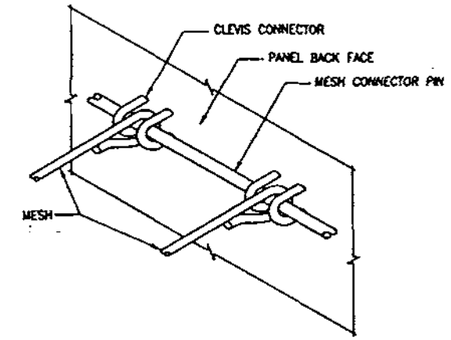

2 MESH CLEVIS CONNECTOR
VSL RETAINED EARTH IS PROTECTED UNDER U.S. PATENT 4,725,170.

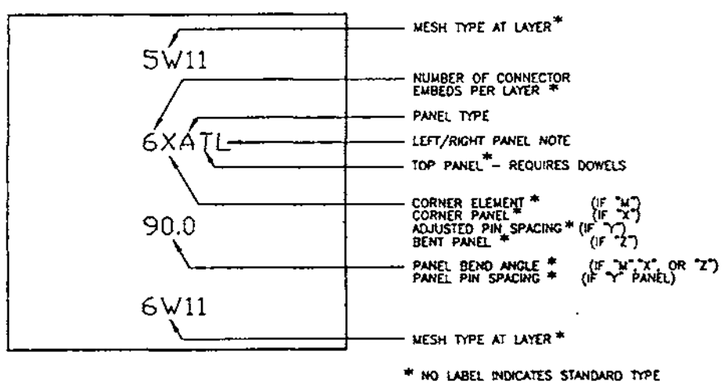

3 PANEL LABELS

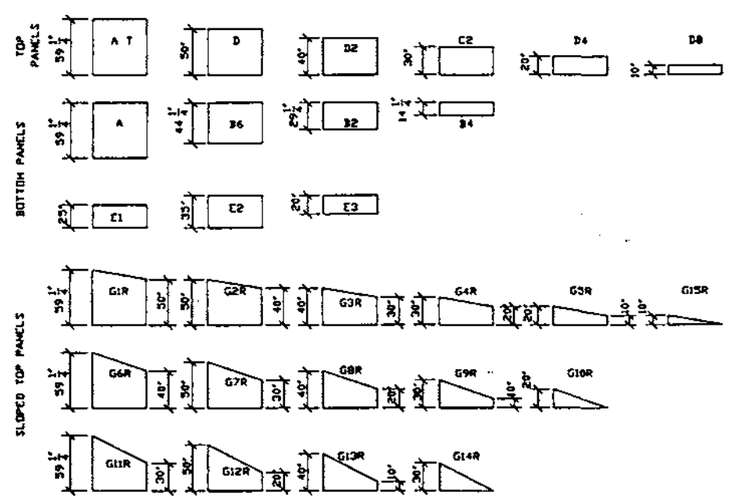

4 PANEL TYPES

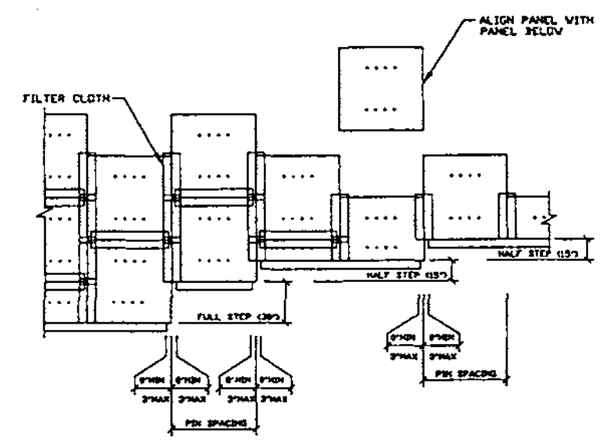

5 PANEL PLACEMENT
BACK FACE SHOWN

CERTIFIED FOR INTERNAL STABILITY OF RETAINED EARTH™ STRUCTURES ONLY. EXTERNAL STABILITY, INCLUDING BUT NOT LIMITED TO FOUNDATION AND SLOPE STABILITY, IS THE RESPONSIBILITY OF THE OWNER. DESIGN IS BASED ON THE ASSUMPTION THAT THE MATERIAL WITHIN THE RETAINED EARTH™ MASS, METHODS OF CONSTRUCTION, AND QUALITY OF PREFABRICATED MATERIALS CONFORM TO THE MANUFACTURER'S SPECIFICATION.

NO	DATE	REVISION	BY	CHK

DES. DRN. CHK.

RETAINED EARTH™

VSL CORPORATION TECHNICAL CENTER
Raleigh, NC 27603
Telephone: (919) 781-4272
Fax: (919) 781-6823

ATLANTA, GA / DALLAS, TX / MILTON, NC (CORPORATE OFFICE)
Mar 11 / Jan 22C / Jan 22C / PHILADELPHIA, PA

RETAINED EARTH™ WALLS
TYPICAL DETAILS

S.R. 414 OVER S.R. 434
SPN 77002-3505 SEMINOLE CO.

SCALE:
TCNA NO:
JOB NO:

W-26

RE-2.DWG
FINA T 08-10-95

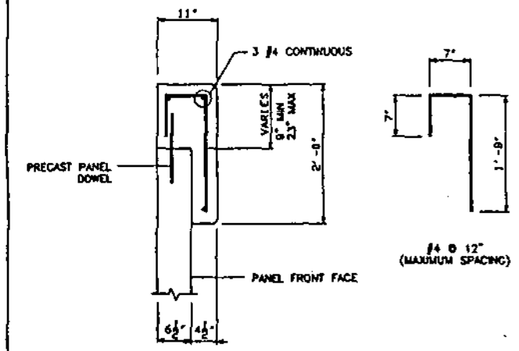

6 C.I.P. COPING
(STANDARD COPING)

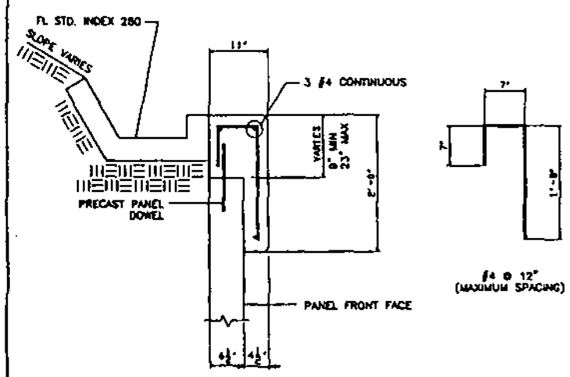

14 C.I.P. COPING w/ GUTTER

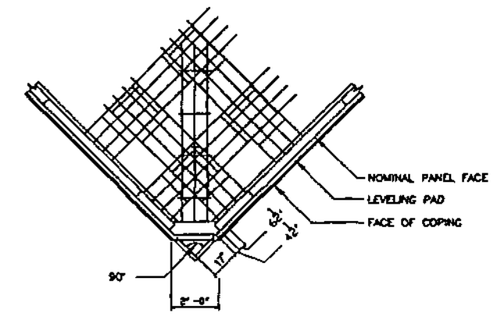

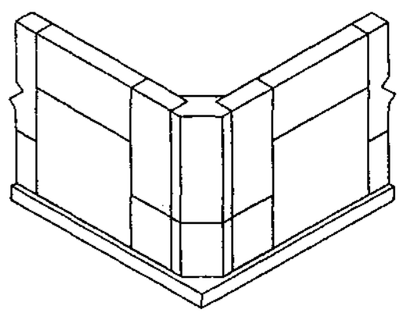

80 CORNER ELEMENT
PLAN VIEW / ISOMETRIC

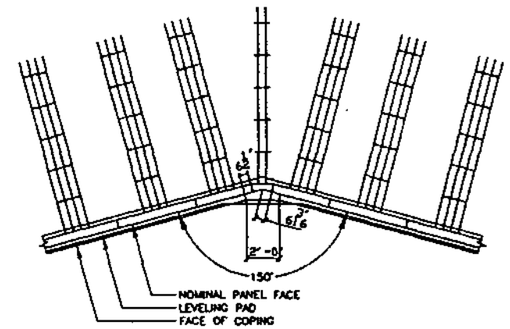

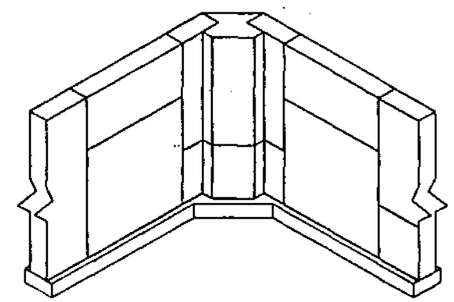

80 CORNER ELEMENT
PLAN VIEW / ISOMETRIC

OBSTRUCTION SHALL BE CONSTRUCTED BEFORE WALL INSTALLATION OR, VOID FORMER SHALL BE INSTALLED DURING BACKFILL PLACEMENT. VOID FORMER NOT SUPPLIED BY VSL.

FIELD CUT AND BEND MESH AROUND OBSTRUCTION.

DAMAGED GALVANIZING SHALL BE COATED WITH ZINC RICH PAINT.

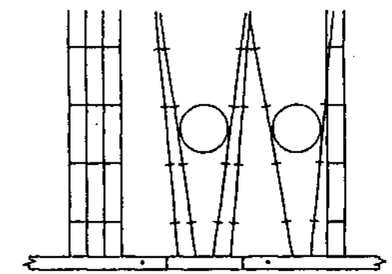

60 OBSTRUCTION (VERTICAL)

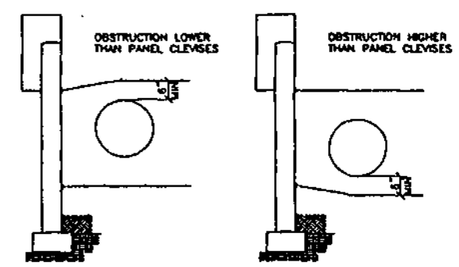

61 OBSTRUCTION (HORIZONTAL)

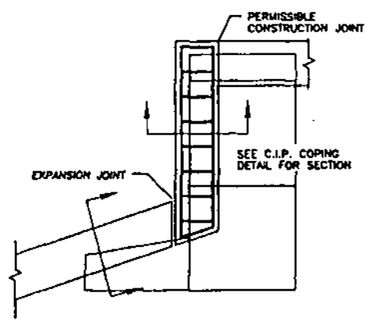

13 VERTICAL COPING (C.I.P.)
(SQUARE PANELS)

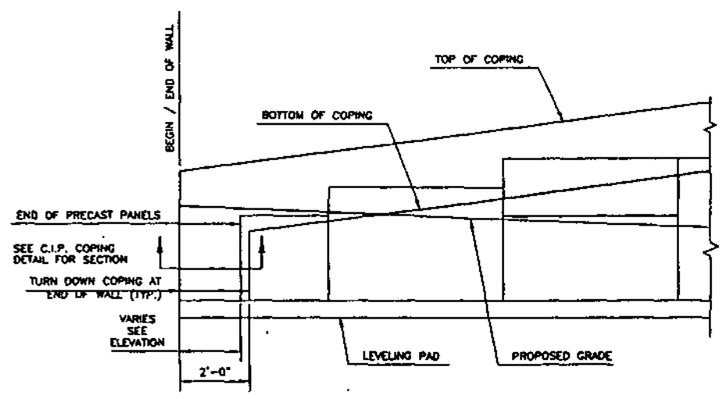

15 COPING ENCLOSURE (C.I.P.)
(SQUARE PANELS)

CERTIFIED FOR INTERNAL STABILITY OF RETAINED EARTH™ STRUCTURES ONLY. EXTERNAL STABILITY, INCLUDING BUT NOT LIMITED TO FOUNDATION AND SLOPE STABILITY, IS THE RESPONSIBILITY OF THE OWNER. DESIGN IS BASED ON THE ASSUMPTION THAT THE MATERIAL WITHIN THE RETAINED EARTH™ MASS, METHODS OF CONSTRUCTION, AND QUALITY OF PREFABRICATED MATERIALS CONFORM TO THE MANUFACTURER'S SPECIFICATION.

NO	DATE	REVISION	BY	CHK

DES. DRN. CHK.

RETAINED EARTH™

VSL CORPORATION TECHNICAL CENTER 342 Rose Place Suite 200 Raleigh, NC 27603 Telephone (919) 781-5272 Fax (919) 781-4802

ATLANTA, GA / DALLAS, TX / RALEIGH, NC (CORPORATE OFFICE) MARK, PA / SAN JOSE, CA / PHILADELPHIA, PA

RETAINED EARTH™ WALLS

S.R. 414 OVER S.R. 434
SPN 77002-3505 SEMINOLE CO.

SCALE:
TONA NO:
JOB NO:

W-27

RE-3A.DWG

FINAL JT 8-10-95

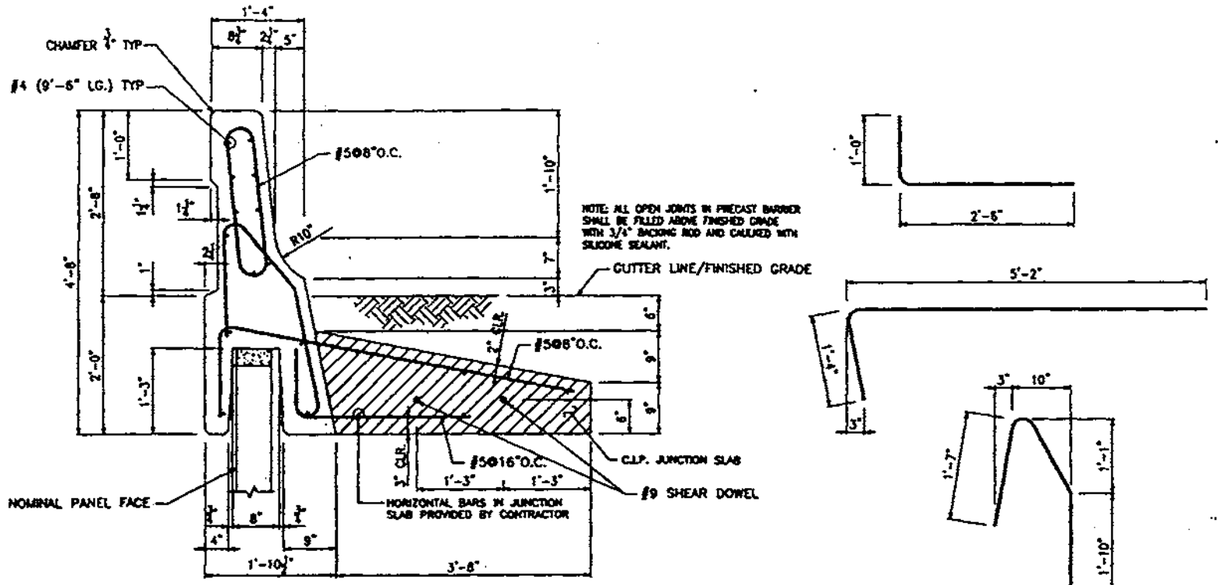

(102) PRECAST BARRIER W/ COPING & JUNCTION SLAB STEEL

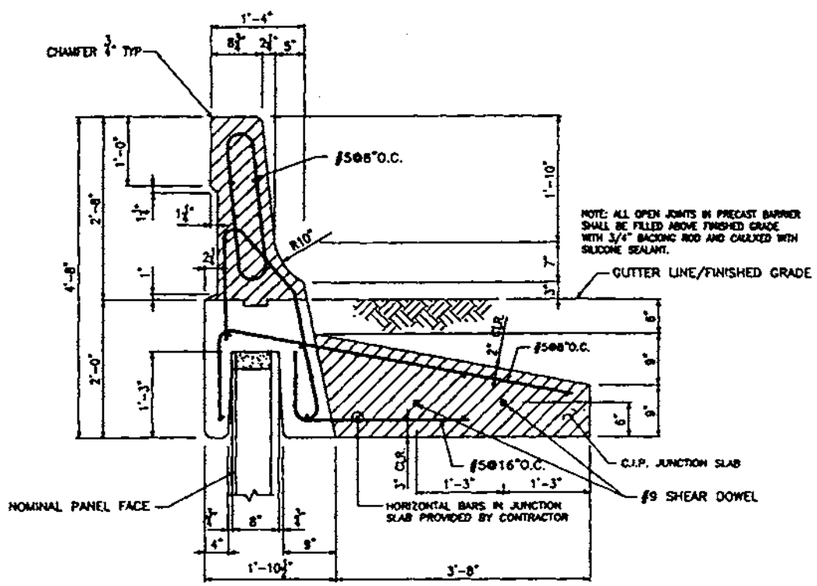

(103) OPTIONAL BARRIER W/ PRECAST COPING & JUNCTION SLAB STEEL

CERTIFIED FOR INTERNAL STABILITY OF RETAINED EARTH™ STRUCTURES ONLY. EXTERNAL STABILITY, INCLUDING BUT NOT LIMITED TO FOUNDATION AND SLOPE STABILITY, IS THE RESPONSIBILITY OF THE OWNER. DESIGN IS BASED ON THE ASSUMPTION THAT THE MATERIAL WITHIN THE RETAINED EARTH™ MASS, METHODS OF CONSTRUCTION, AND QUALITY OF PREFABRICATED MATERIALS CONFORM TO THE MANUFACTURER'S SPECIFICATION.

NO.	DATE	REVISION	BY	CHK

DES. DRN. CHK.

RETAINED EARTH™

VSL CORPORATION
TECHNOLOGY CENTER
3010 Peach Pkwy, Suite 30
Buford, GA 30518
Phone (770) 271-4277
Fax (770) 271-4288

ATLANTA, GA / DALLAS, TX / HOUSTON, TX (CORPORATE OFFICE)
Miami, FL / San Jose, CA / Springfield, VA

RETAINED EARTH™ WALLS

S.R. 414 OVER S.R. 434
SPN 77002-3505 SEMINOLE CO.

SCALE:
TCNA NO:
JOB NO:

W-28

CIP-1.DWG
FINAL F -10-95

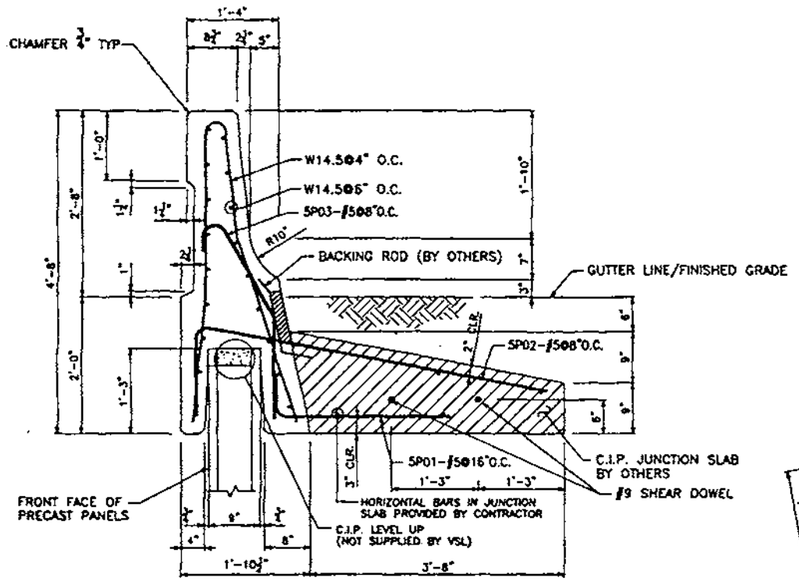

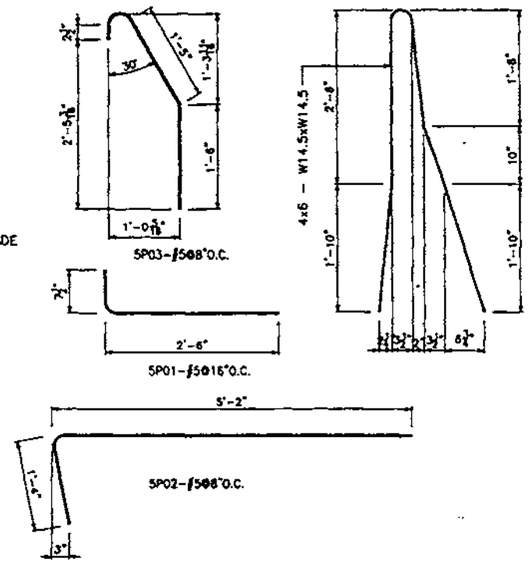

24 TYPE HTB_ PRECAST BARRIER W/COPING & JUNCTION SLAB REINFORCEMENT

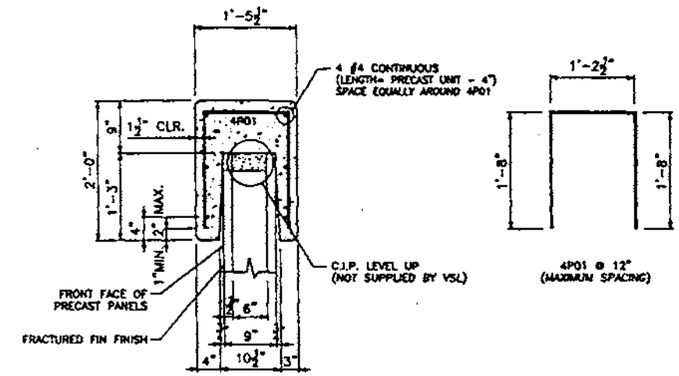

20 TYPE H_ PRECAST COPING
(STANDARD COPING)

PRECAST BARRIER NOTES

1. ALL OPEN JOINTS IN PRECAST BARRIER SHALL BE FILLED ABOVE FINISHED GRADE WITH 3/4" BACKING ROD AND CAULKED WITH SILICONE SEALANT.

CERTIFIED FOR INTERNAL STABILITY OF RETAINED EARTH™ STRUCTURES ONLY. EXTERNAL STABILITY, INCLUDING BUT NOT LIMITED TO FOUNDATION AND SLOPE STABILITY, IS THE RESPONSIBILITY OF THE OWNER. DESIGN IS BASED ON THE ASSUMPTION THAT THE MATERIAL WITHIN THE RETAINED EARTH™ MASS, METHODS OF CONSTRUCTION, AND QUALITY OF PREFABRICATED MATERIALS CONFORM TO THE MANUFACTURER'S SPECIFICATION.

NO.	DATE	REVISION	BY	CHK

DES. DRN CHK

RETAINED EARTH™

VSL CORPORATION TECHNICAL CENTER 7979 Ivy Hills Drive, Suite 200 Raleigh, NC 27615 Telephone: (919) 781-1272 Fax: (919) 781-4492

ATLANTA, GA / DALLAS, TX / FAIRFAX, VA (CORPORATE OFFICE) SAN JOSE, CA / SAN JUAN, P.R. / SINGAPORE

RETAINED EARTH™ WALLS

S.R. 414 OVER S.R. 434
SPN 77002-3505 SEMINOLE CO.

SCALE:
TCHA NO:
JOB NO:

W-29

DET-3.DWG

FINAL F... 8-10-95

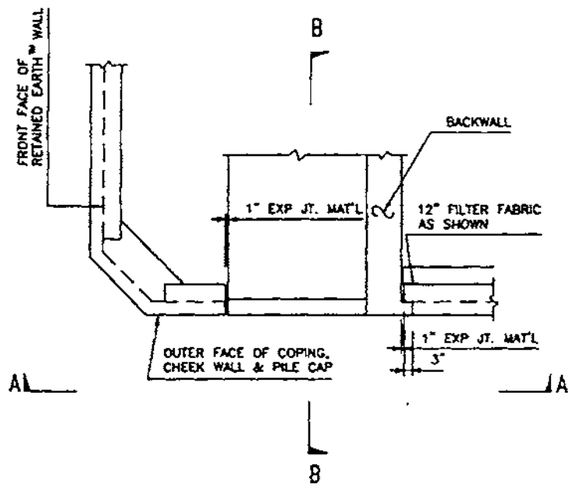

PLAN VIEW AT END BENT

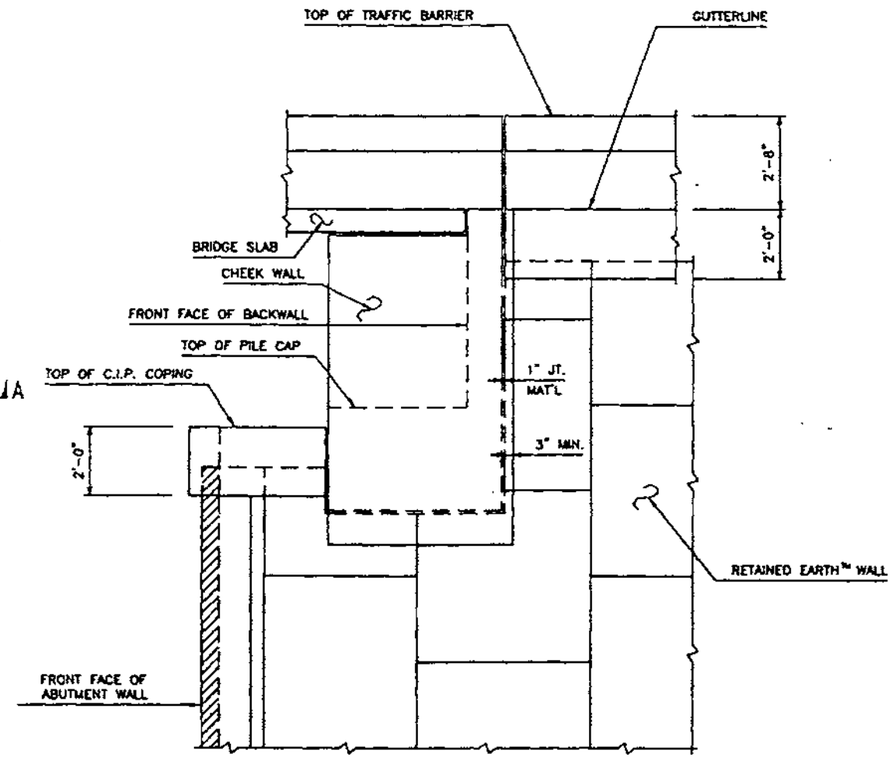

SECTION A-A

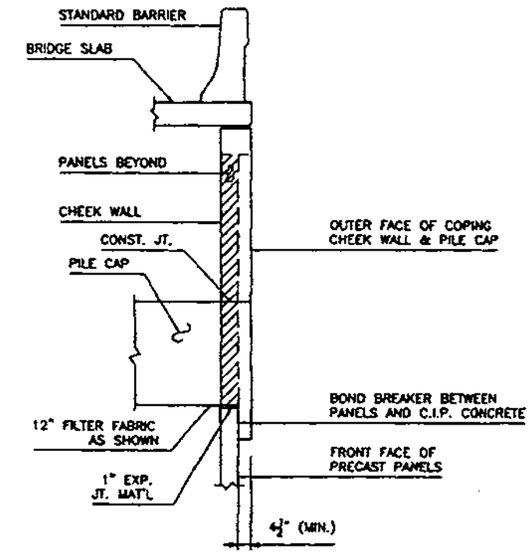

SECTION B-B

CERTIFIED FOR INTERNAL STABILITY OF RETAINED EARTH™ STRUCTURES ONLY. EXTERNAL STABILITY, INCLUDING BUT NOT LIMITED TO FOUNDATION AND SLOPE STABILITY, IS THE RESPONSIBILITY OF THE OWNER. DESIGN IS BASED ON THE ASSUMPTION THAT THE MATERIAL WITHIN THE RETAINED EARTH™ MASS, METHODS OF CONSTRUCTION, AND QUALITY OF PREFABRICATED MATERIALS CONFORM TO THE MANUFACTURER'S SPECIFICATION.

NO	DATE	REVISION	BY	CHK

DES. DRN. CHK.

RETAINED EARTH™

VSL CORPORATION TECHNICAL CENTER 3838 Rice Mine Road, Suite 300 Tuscaloosa, AL 35406 Phone: (205) 759-4372 Fax: (205) 759-4002

ATLANTA, GA / BOSTON, MA / CHICAGO, IL / DALLAS, TX / DENVER, CO / HOUSTON, TX / LOS ANGELES, CA / PHILADELPHIA, PA

RETAINED EARTH™ WALLS

S.R. 414 OVER S.R. 434
SPN 77002-3505 SEMINOLE CO.

SCALE:
TOYA NO:
JOB NO:

W-30

DET-1.DWG

08-10-95

FINAL

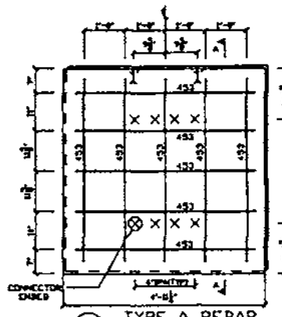

A TYPE A REBAR
(AREA = 25.00 SQ. FT.)

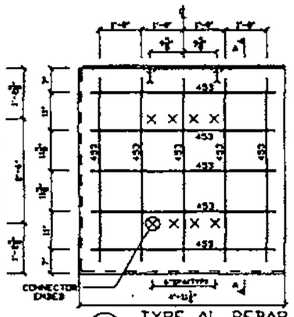

AL TYPE AL REBAR
(AREA = 25.00 SQ. FT.)

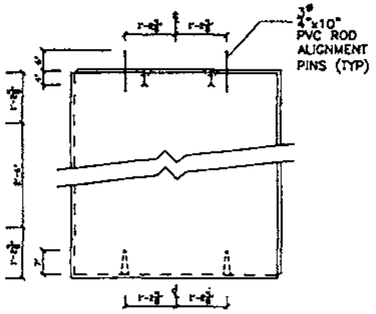

I ALIGNMENT PINS
ALIGNMENT PINS NOT REQUIRED FOR TYPE _L, TYPE _AP OR TOP PANELS

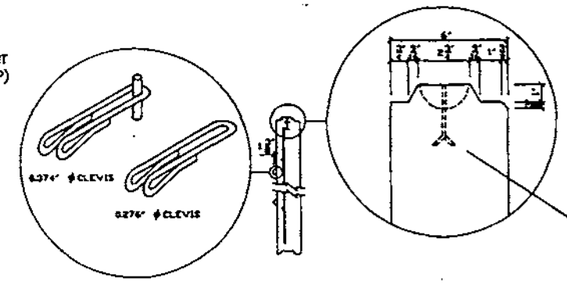

A-A SECTION A-A

LIFTING INSERT DETAIL
GEORGE® SPREAD ANCHOR (ONE TOP)

PANEL REINFORCEMENT NOTES:

1. PANELS ARE SHOWN BACK FACE.
2. RIGHT END PANELS ARE OPPOSITE TO LEFT END.
3. DIMENSIONS ARE TO FORM INSIDE BACK FACE.
4. VERTICAL REINFORCEMENT SHALL HAVE 2" MINIMUM COVER TO THE BACK FACE.
5. HORIZONTAL REINFORCEMENT SHALL HAVE 1½" MINIMUM COVER TO THE BACK FACE.
6. ALL REINFORCEMENT SHALL HAVE 2" MINIMUM COVER TO THE SIDES.
7. REINFORCEMENT LABELS INDICATE BAR SIZE AND LENGTH. EXAMPLE: 454 IS A #4 BAR 54" LONG.
8. REINFORCEMENT SHALL BE GRADE 60.
9. EQUIVALENT WELDED WIRE FABRIC MAY BE USED.
10. SEE RETAINED EARTH™ PRECASTING SPECIFICATIONS FOR CONCRETE REQUIREMENTS.
11. VSL RETAINED EARTH™ IS PROTECTED UNDER PATENT 4,725,170.

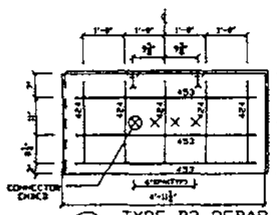

B2 TYPE B2 REBAR
(AREA = 12.50 SQ. FT.)

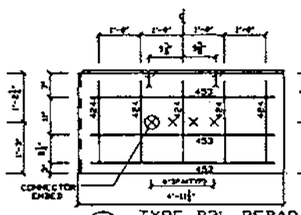

B2L TYPE B2L REBAR
(AREA = 12.50 SQ. FT.)

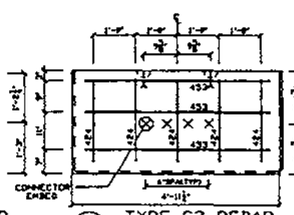

C2 TYPE C2 REBAR
(AREA = 12.50 SQ. FT.)

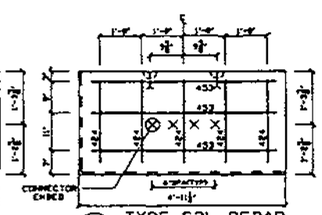

C2L TYPE C2L REBAR
(AREA = 12.50 SQ. FT.)

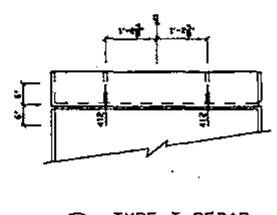

T TYPE T REBAR

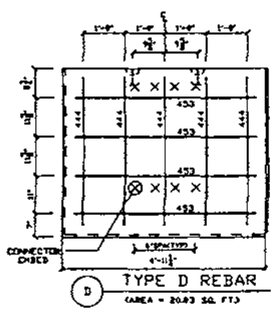

D TYPE D REBAR
(AREA = 20.83 SQ. FT.)

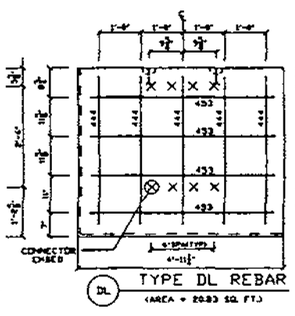

DL TYPE DL REBAR
(AREA = 20.83 SQ. FT.)

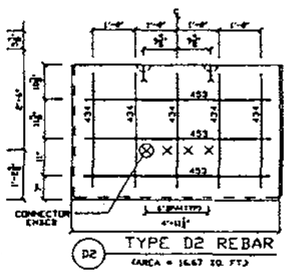

D2 TYPE D2 REBAR
(AREA = 16.67 SQ. FT.)

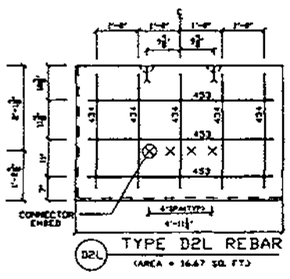

D2L TYPE D2L REBAR
(AREA = 16.67 SQ. FT.)

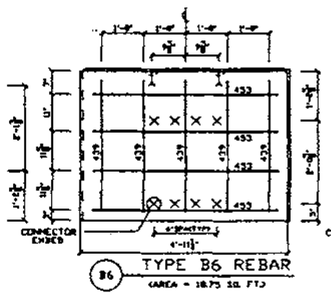

B6 TYPE B6 REBAR
(AREA = 18.75 SQ. FT.)

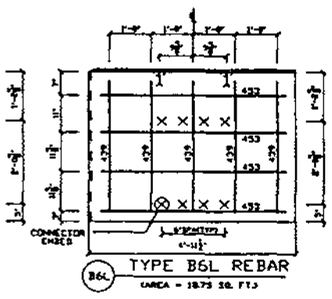

B6L TYPE B6L REBAR
(AREA = 18.75 SQ. FT.)

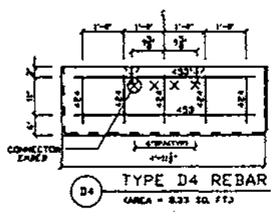

D4 TYPE D4 REBAR
(AREA = 8.33 SQ. FT.)

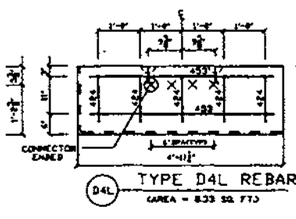

D4L TYPE D4L REBAR
(AREA = 8.33 SQ. FT.)

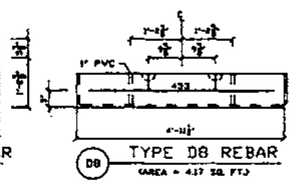

D8 TYPE D8 REBAR
(AREA = 4.17 SQ. FT.)

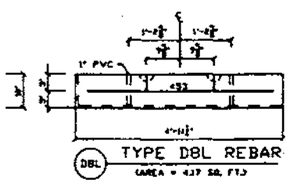

D8L TYPE D8L REBAR
(AREA = 4.17 SQ. FT.)

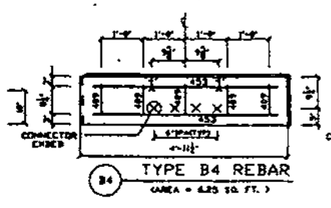

B4 TYPE B4 REBAR
(AREA = 6.25 SQ. FT.)

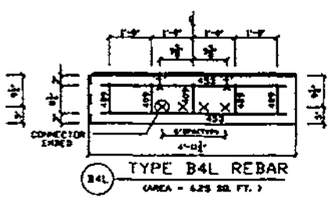

B4L TYPE B4L REBAR
(AREA = 6.25 SQ. FT.)

CERTIFIED FOR INTERNAL STABILITY OF RETAINED EARTH™ STRUCTURES ONLY. EXTERNAL STABILITY, INCLUDING BUT NOT LIMITED TO FOUNDATION AND SLOPE STABILITY, IS THE RESPONSIBILITY OF THE OWNER. DESIGN IS BASED ON THE ASSUMPTION THAT THE MATERIAL WITHIN THE RETAINED EARTH™ MASS, METHODS OF CONSTRUCTION, AND QUALITY OF PREFABRICATED MATERIALS CONFORM TO THE MANUFACTURER'S SPECIFICATION.

NO.	DATE	REVISION	BY	CHK

DES. | DRN | CHK

RETAINED EARTH™

VSL CORPORATION
TECHNICAL CENTER
2840 Avon Place, Suite 200
Raleigh, NC 27613
Telephone (919) 781-4272
Fax (919) 781-0482

ATLANTA, GA / DALLAS, TX / DALEVILLE, NC (CORPORATE OFFICE)
MIAMI, FL / SAN JOSE, CA / SPRINGFIELD, VA

RETAINED EARTH™ WALLS
TYPICAL PANEL REINFORCEMENT

S.R. 414 OVER S.R. 434
SPN 77002-3505 SEMINOLE CO.

SCALE:
TCHA NO:
JOB NO:

W-31

SQ-BAR.DWG

FINAL YT 01-01-95

PANEL REINFORCEMENT NOTES:

1. PANELS ARE SHOWN BACK FACE.
2. RIGHT END PANELS ARE OPPOSITE TO LEFT END.
3. DIMENSIONS ARE TO FORM INSIDE BACK FACE.
4. VERTICAL REINFORCEMENT SHALL HAVE 2" MINIMUM COVER TO THE BACK FACE.
5. HORIZONTAL REINFORCEMENT SHALL HAVE 1½" MINIMUM COVER TO THE BACK FACE.
6. ALL REINFORCEMENT SHALL HAVE 2" MINIMUM COVER TO THE SIDES.
7. REINFORCEMENT LABELS INDICATE BAR SIZE AND LENGTH. EXAMPLE: 454 IS A #4 BAR 54" LONG.
8. REINFORCEMENT SHALL BE GRADE 60.
9. EQUIVALENT WELDED WIRE FABRIC MAY BE USED.
10. SEE RETAINED EARTH® PRECASTING SPECIFICATIONS FOR CONCRETE REQUIREMENTS.
11. VSL RETAINED EARTH™ IS PROTECTED UNDER PATENT 4,725,170.

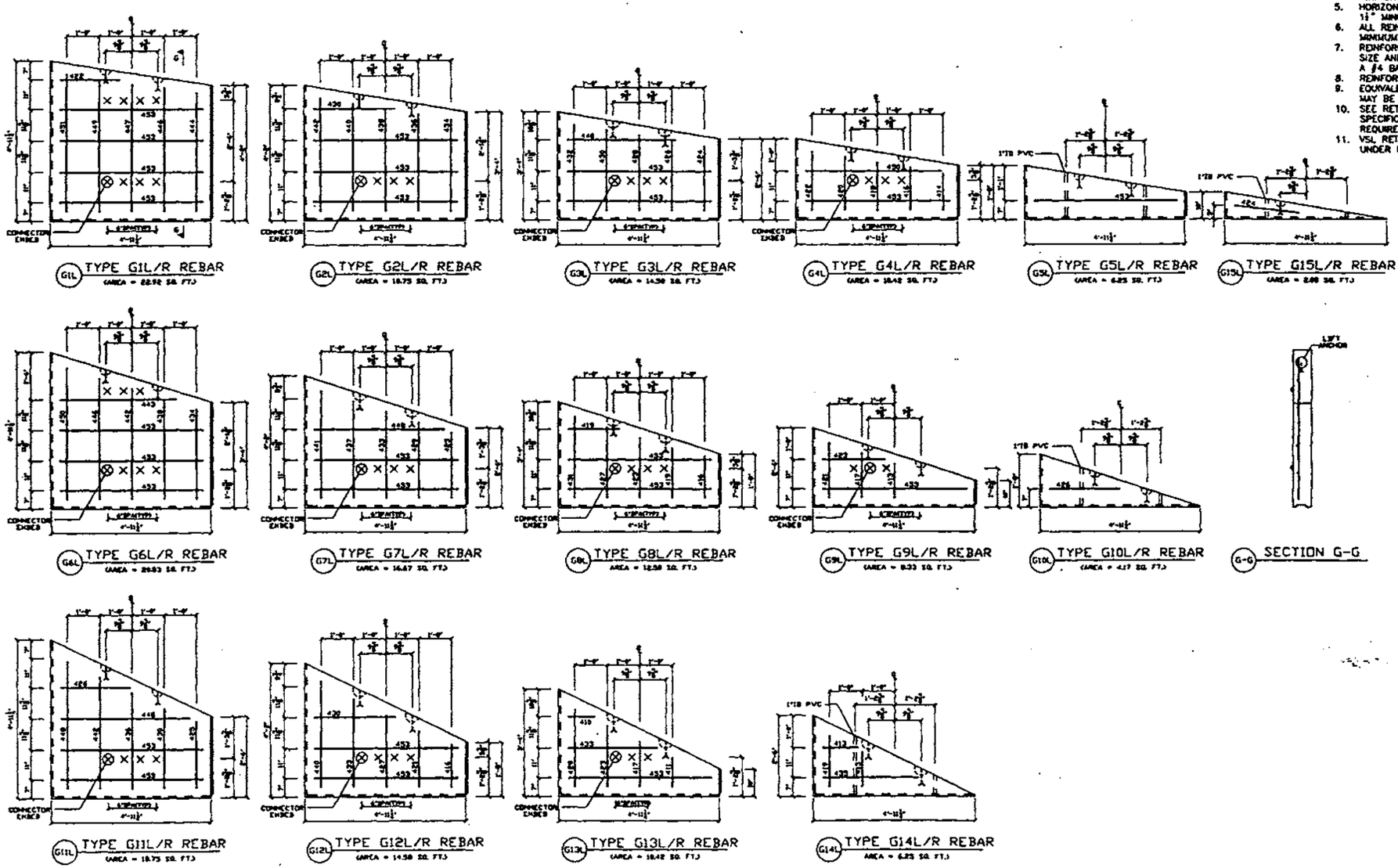

CERTIFIED FOR INTERNAL STABILITY OF RETAINED EARTH™ STRUCTURES ONLY. EXTERNAL STABILITY, INCLUDING BUT NOT LIMITED TO FOUNDATION AND SLOPE STABILITY, IS THE RESPONSIBILITY OF THE OWNER. DESIGN IS BASED ON THE ASSUMPTION THAT THE MATERIAL WITHIN THE RETAINED EARTH™ MASS, METHODS OF CONSTRUCTION, AND QUALITY OF PREFABRICATED MATERIALS CONFORM TO THE MANUFACTURER'S SPECIFICATION.

NO	DATE	REVISION	BY	CHK

RCS DRN. CHK. RETAINED EARTH™

VSL CORPORATION TECHNICAL CENTER 3800 Penn Point, Suite 200 Lansdale, PA 19446 Tel (215) 361-4272 Fax (215) 361-4888

VSL

ATLANTA, GA / DALLAS, TX / DALTON, NJ (CORPORATE OFFICE) DENVER, CO / San JOSE, CA / SPARTANBURG, SC

RETAINED EARTH™ WALLS
G-PANEL REINFORCEMENT

S.R. 414 OVER S.R. 434
SPN 77002-3505 SEMINOLE CO.

SCALE:
TCHA NO:
JOB NO:

W-32

SO-BAR.DWG 01-01-95 FINAL

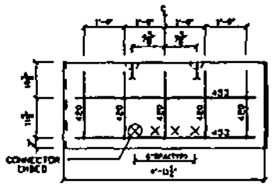

E1 TYPE E1 REBAR
(AREA = 10.42 SQ. FT.)

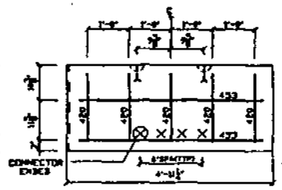

E1L TYPE E1L REBAR
(AREA = 10.42 SQ. FT.)

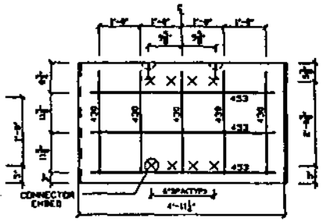

E2 TYPE E2 REBAR
(AREA = 14.58 SQ. FT.)

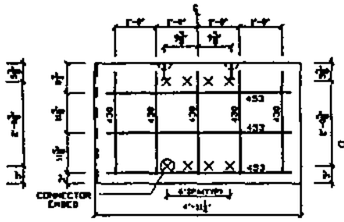

E2L TYPE E2L REBAR
(AREA = 14.58 SQ. FT.)

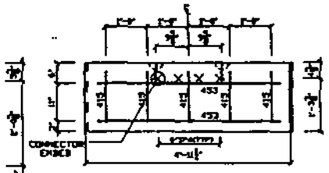

E3 TYPE E3 REBAR
(AREA = 8.33 SQ. FT.)

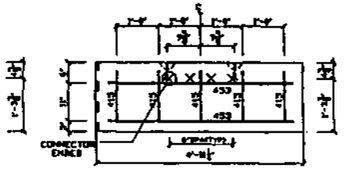

E3L TYPE E3L REBAR
(AREA = 8.33 SQ. FT.)

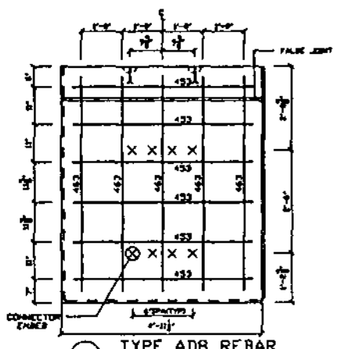

AD8 TYPE AD8 REBAR
(AREA = 29.16 SQ. FT.)

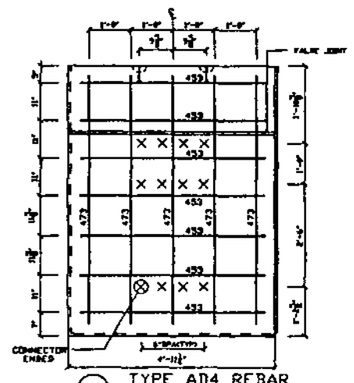

AD4 TYPE AD4 REBAR
(AREA = 33.33 SQ. FT.)

PANEL REINFORCEMENT NOTES:

1. PANELS ARE SHOWN BACK FACE.
2. RIGHT END PANELS ARE OPPOSITE TO LEFT END.
3. DIMENSIONS ARE TO FORM INSIDE BACK FACE.
4. VERTICAL REINFORCEMENT SHALL HAVE 2" MINIMUN COVER TO THE BACK FACE.
5. HORIZONTAL REINFORCEMENT SHALL HAVE 1½" MINIMUM COVER TO THE BACK FACE.
6. ALL REINFORCEMENT SHALL HAVE 2" MINIMUM COVER TO THE SIDES.
7. REINFORCEMENT LABELS INDICATE BAR SIZE AND LENGTH. EXAMPLE: 454 IS A #4 BAR 54" LONG.
8. REINFORCEMENT SHALL BE GRADE 60.
9. EQUIVALENT WELDED WIRE FABRIC MAY BE USED.
10. SEE RETAINED EARTH™ PRECASTING SPECIFICATIONS FOR CONCRETE REQUIREMENTS.
11. VSL RETAINED EARTH™ IS PROTECTED UNDER PATENT 4,723,170.

CERTIFIED FOR INTERNAL STABILITY OF RETAINED EARTH™ STRUCTURES ONLY. EXTERNAL STABILITY, INCLUDING BUT NOT LIMITED TO FOUNDATION AND SLOPE STABILITY, IS THE RESPONSIBILITY OF THE OWNER. DESIGN IS BASED ON THE ASSUMPTION THAT THE MATERIAL WITHIN THE RETAINED EARTH™ MASS, METHODS OF CONSTRUCTION, AND QUALITY OF PREFABRICATED MATERIALS CONFORM TO THE MANUFACTURER'S SPECIFICATION.

NO.	DATE	REVISION	BY	CHK

DES. | DRN. | CHK.

RETAINED EARTH™ WALLS
E-PANEL REINFORCEMENT

S.R. 414 OVER S.R. 434
SPN 77002-3505 SEMINOLE CO.

SCALE:
TCHA NO:
JOB NO:

W-33

SQ-BAR.DWG

FINAL / 01-01-95

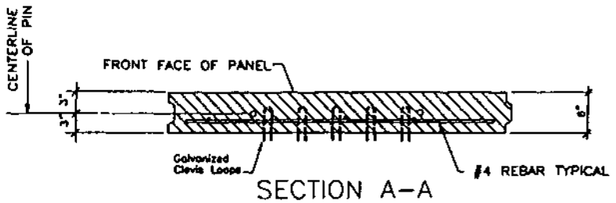

SECTION A–A

N.T.S.

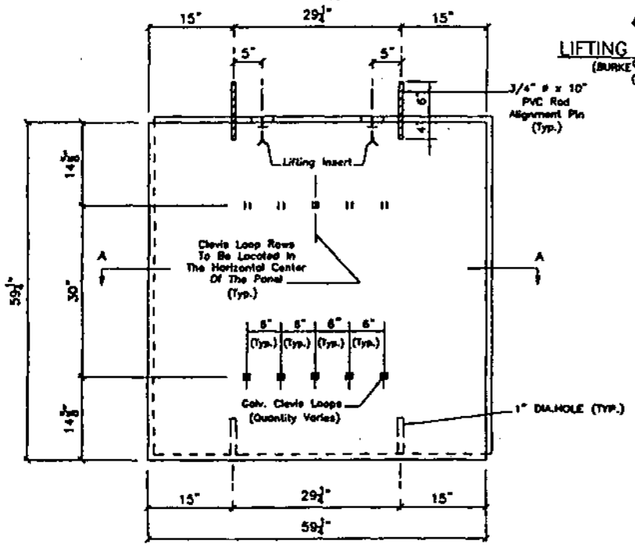

STANDARD "5A" PANEL

Back Face View

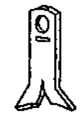

LIFTING INSERT DETAIL

(BURKE® SPREAD ANCHOR) (ONE TON)

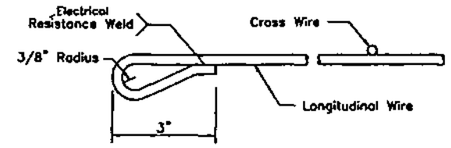

WIRE MESH LOOP DETAIL

N.T.S.

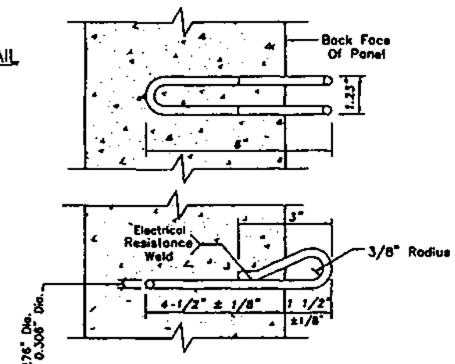

CLEVIS LOOP DETAIL

N.T.S.

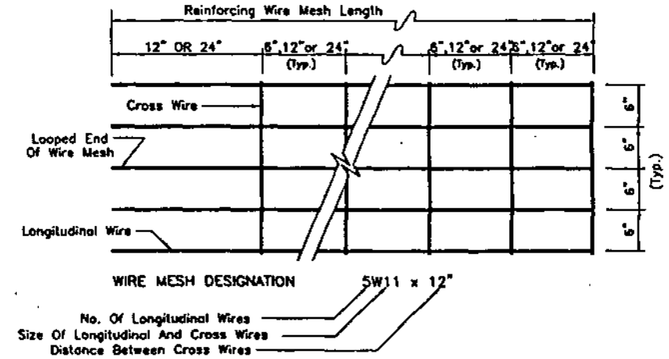

REINFORCING MESH DETAIL

(5W11 MESH SHOWN)

NOTES :

1. 5W11 Mesh Shown, Mesh Configuration Varies. In 5W11, 5 Designates The No. Of Longitudinal Members Per Unit, While W11 Is The ASTM Standard Wire Reinforcement Designation. See Wall Elevations For Individual Mesh Configurations.
2. Number Of Mesh Wire Loops Varies According To Mesh Configuration.
3. All Panel Joints On Back Face Of Panels To Be Covered With Geotextile Fabric, Class2, Type A. Refer To Partial Wall Elevation Detail, This Sheet.
4. Use 2"x2" Polyurethane Foam Strips In The Vertical Panel Joints.
5. All Connections Must Align Within 1/8 Inch Of Alignment.
6. All odd integer mesh lengths will use a 12" spacing from the loop to the first crossbar. All even integer mesh lengths will use a 24" spacing from the loop to the first crossbar.

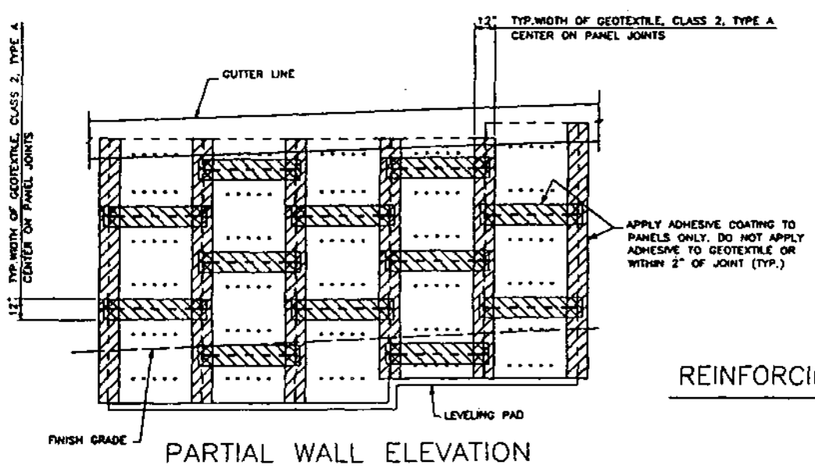

PARTIAL WALL ELEVATION

(BACK FACE)

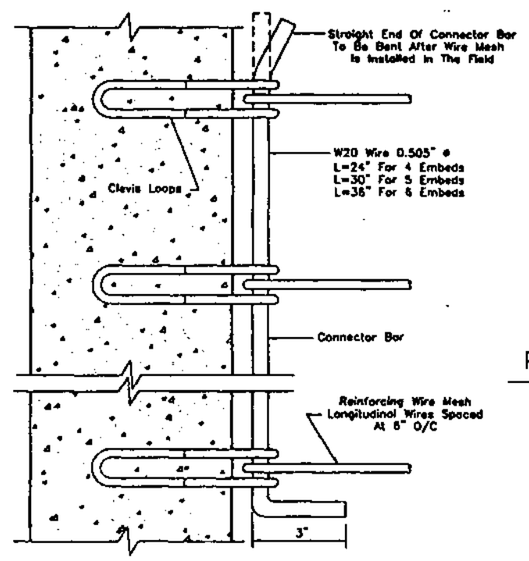

REINFORCING MESH CONNECTION DETAIL

N.T.S.

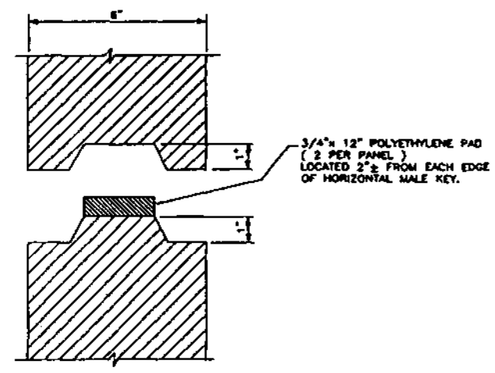

PANEL JOINT DETAIL

N.T.S.

CERTIFIED FOR INTERNAL STABILITY OF RETAINED EARTH™ STRUCTURES ONLY. EXTERNAL STABILITY, INCLUDING BUT NOT LIMITED TO FOUNDATION AND SLOPE STABILITY, IS THE RESPONSIBILITY OF THE OWNER. DESIGN IS BASED ON THE ASSUMPTION THAT THE MATERIAL WITHIN THE RETAINED EARTH™ MASS, METHODS OF CONSTRUCTION, AND QUALITY OF PREFABRICATED MATERIALS CONFORM TO THE MANUFACTURER'S SPECIFICATION.

NO	DATE	REVISION	BY	CHK

DES. DRN. CHK.

VSL RETAINED EARTH™

VSL CORPORATION TECHNICAL CENTER

RETAINED EARTH™ WALLS

S.R. 414 OVER S.R. 434

SPN 77002-3505 SEMINOLE CO.

SCALE:

TCMA NO:

JOB NO:

W-34

DET-2.DWG

8-10-95

FINAL

SYSTEM DETAILS
HILFIKER MSE 5x5 PANEL WALL SYSTEM

INDEX OF SHEETS

SHEET No.	DESCRIPTION
HWCOV	COVER SHEET
HW01	STANDARD SECTIONS AND ELEVATION
HW02	LEVELING COURSE AND OBSTRUCTION DETAILS
HW03	BRIDGE ABUTMENT CHEEK WALL DETAILS
HW04	CORNER AND JOINT DETAILS
HW05	STANDARD PANEL DETAILS
HW06	PRE-CAST SPECIAL PANELS
HW07	COPING DETAILS
HW08	COPING DETAILS

HILFIKER PRODUCTS ARE COVERED BY PATENTS AND PATENTS PENDING. MATERIAL CONTAINED HERE WITHIN CAN NOT BE REPRODUCED IN ANY FASHION WITHOUT WRITTEN CONSENT OF T&B STRUCTURAL SYSTEMS. 4,208,139/4,334,308/4,343,572/4,117,688/4,330,888/4,505,631/5,484,235 OTHER U.S. AND FOREIGN PATENTS PENDING

THE DESIGN CONTAINED IN THIS DRAWING IS BASED ON INFORMATION SUPPLIED BY THE FDOT CONSULTANT. THIS IS CERTIFYING THE INTERNAL STABILITY OF THE MSE MASS ONLY. ALL EXTERNAL STABILITY REQUIREMENTS ARE THE RESPONSIBILITY OF THE OWNER.

REVISIONS

DATE	BY	DESCRIPTION

T&B STRUCTURAL SYSTEMS, INC.
ENGINEERED STRUCTURES

SEAL:

FLORIDA DEPARTMENT OF TRANSPORTATION
STRUCTURES DESIGN OFFICE

ROAD NO.	COUNTY	PROJECT NO.
SR414	SEMINOLE	77002-3505

SHEET TITLE: HILFIKER MSE 5x5 PANEL WALL SYSTEM

PROJECT NAME: S.R.414 OVER S.R.434

DRAWING NO.: HWCOV

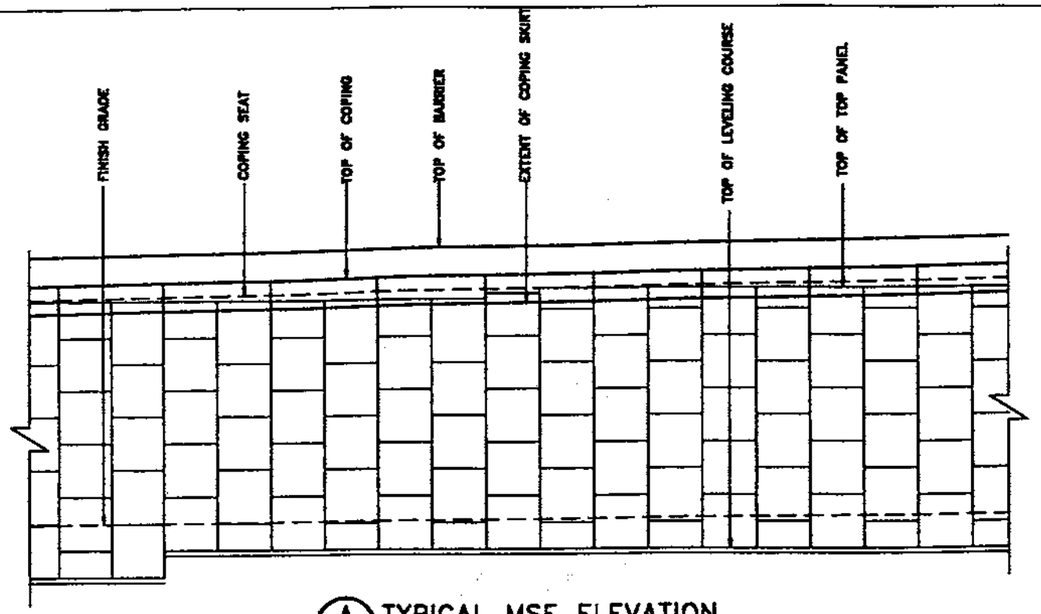

A/01 TYPICAL MSE ELEVATION

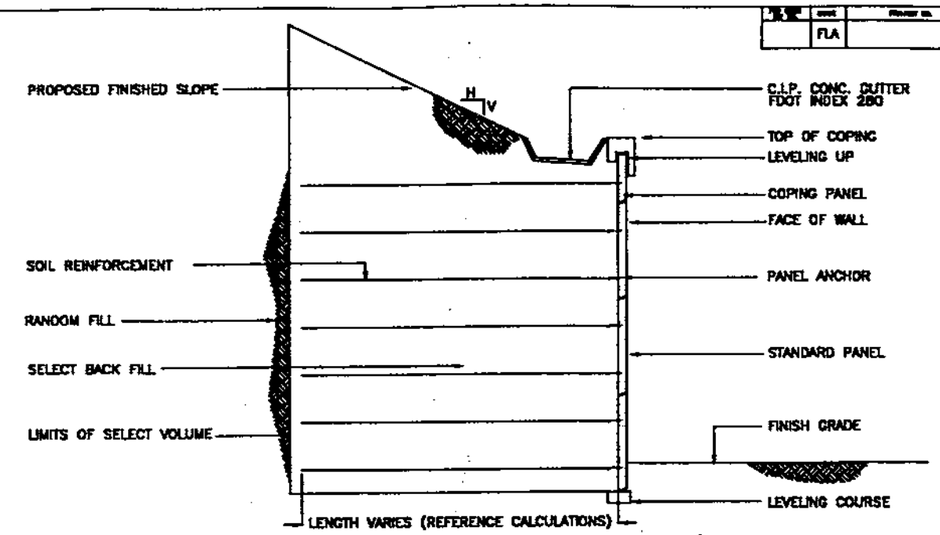

C/01 TYPICAL MSE SECTION WITH SLOPE

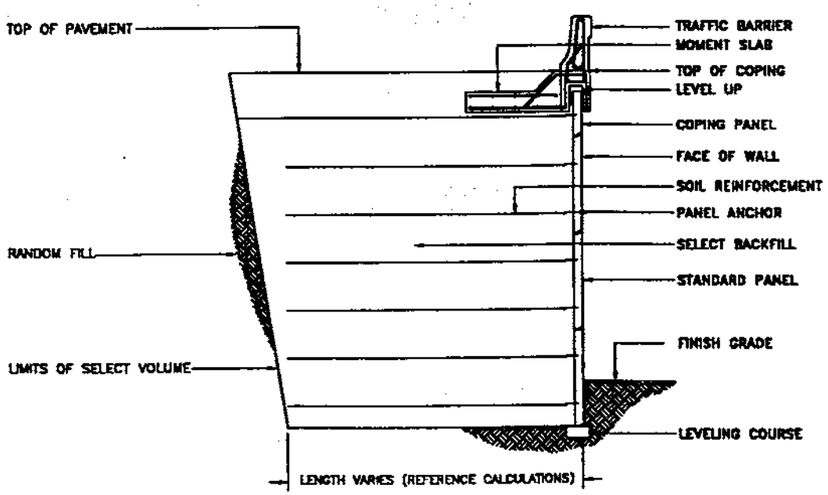

B/01 TYPICAL MSE SECTION WITH BARRIER

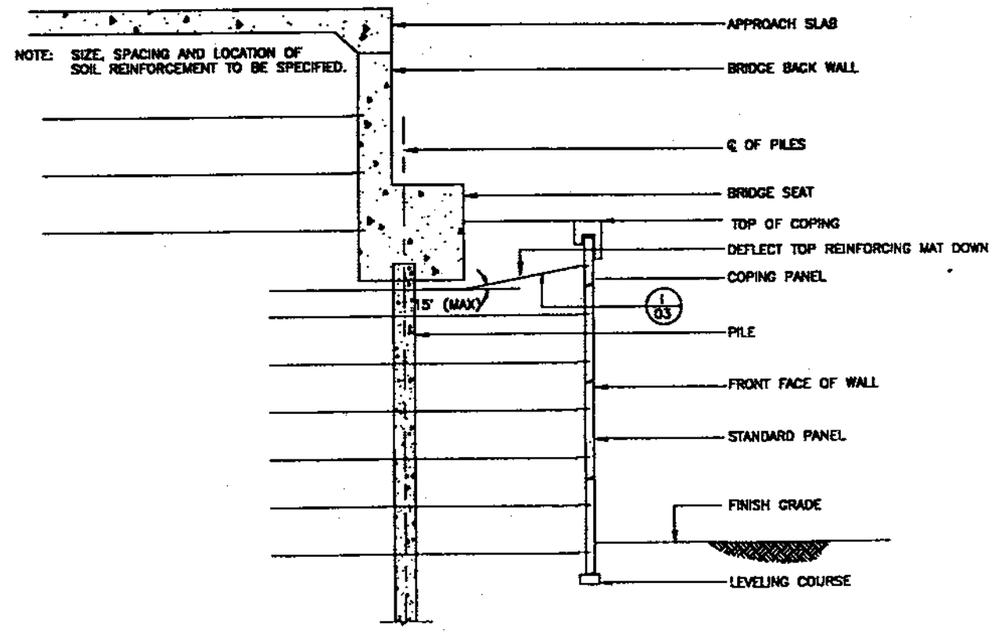

D/01 TYPICAL MSE SECTION AT ABUTMENT

HILFIKER PRODUCTS ARE COVERED BY PATENTS AND PATENTS PENDING. MATERIAL CONTAINED HERE WITHIN CAN NOT BE REPRODUCED IN ANY FASHION WITHOUT WRITTEN CONSENT OF T&B STRUCTURAL SYSTEMS 4,290,286/4,324,508/4,343,572/4,117,688/4,324,089/4,505,631/5,484,235 OTHER U.S. AND FOREIGN PATENTS PENDING

THE DESIGN CONTAINED IN THIS DRAWING IS BASED ON INFORMATION SUPPLIED BY THE FDOT CONSULTANT. T&B IS CERTIFYING THE INTERNAL STABILITY OF THE MSE WALL ONLY. ALL EXTERNAL STABILITY REQUIREMENTS ARE THE RESPONSIBILITY OF THE OWNER.

REVISIONS		
DATE	BY	DESCRIPTION

T&B STRUCTURAL SYSTEMS, INC.
ENGINEERED STRUCTURES
HILFIKER WALLS
HILFIKER BLOCK

SEAL:

FLORIDA DEPARTMENT OF TRANSPORTATION
STRUCTURES DESIGN OFFICE

ROAD NO.	COUNTY	PROJECT NO.
SR414	SEMINOLE	77002-3505

SHEET TITLE: STANDARD SECTIONS AND ELEVATIONS HILFIKER MSE 5' 5 PANEL WALL SYSTEM

PROJECT NAME: S.R.414 OVER S.R.434

Drawing No.: HW01

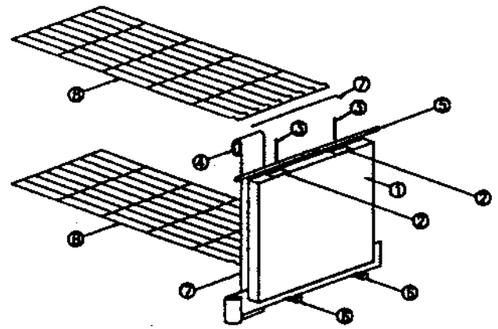

1. TYPICAL PRE-CAST PANEL WITH CAST IN PLACE ANCHORS
2. 3" X 8" X 1/4" NEOPRENE PAD – 1 EACH PANEL
3. 1/– 2" X 10" GALVANIZED STEEL ALIGNMENT PIN – 1 EACH PANEL
4. 12" FILTER FABRIC
5. 3/4" BACKER ROD OR EQUIVALENT (OPTIONAL BY OTHERS)
6. HARD WOOD SHIMS (USE IF NECESSARY)
7. CONNECTION PIN – 1 PER SOIL REINFORCING MAT
8. WELDED WIRE GRID SOIL REINFORCING MAT (AS REQUIRED)

A/02 TYPICAL MATERIAL ISOMETRIC

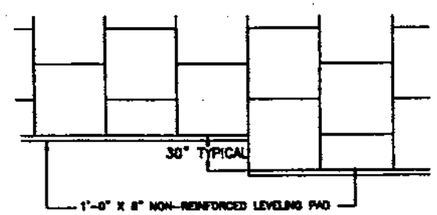

NOTE: LEVELING COURSE SHALL BE PLACED TO THE ELEVATIONS AS SHOWN ON THE PLANS. TOLERANCE FOR ELEVATIONS SHALL BE PLUS-MINUS 0.25"

B/02 LEVELING COURSE STEP ELEVATION

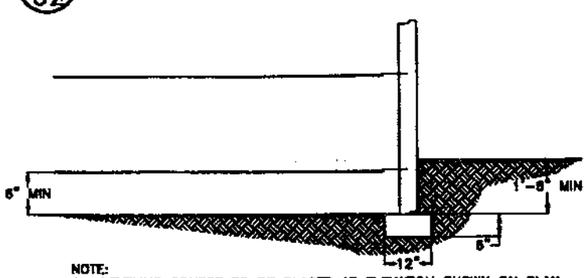

NOTE:
1. LEVELING COURSE TO BE PLACED AT ELEVATION SHOWN ON PLAN
2. TOLERANCE OF LEVELING COURSE SHALL BE 1/4"
3. SPECIAL 12" BOTTOM PANEL AVAILABLE ON REQUEST

C/02 LEVELING COURSE SECTION

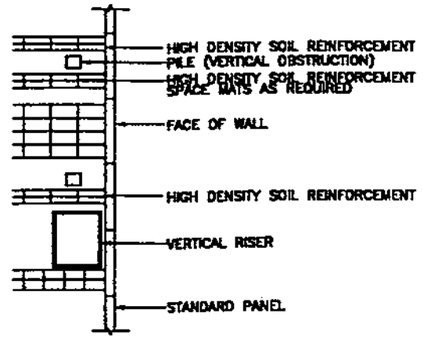

NOTE:
1. VERTICAL OBSTRUCTIONS REQUIRE SPECIAL DESIGN CONSIDERATIONS
2. THE DETAIL AS SHOWN IS FOR CONCEPT ONLY AND MAY VARY ON FINAL DESIGN
3. REFERENCE SPECIAL DESIGN CALCULATIONS FOR DETAILS AND COMPONENT TYPE AND SIZE
4. OBSTRUCTION SHALL BE INSTALLED BEFORE WALL

D/02 VERTICAL OBSTRUCTION

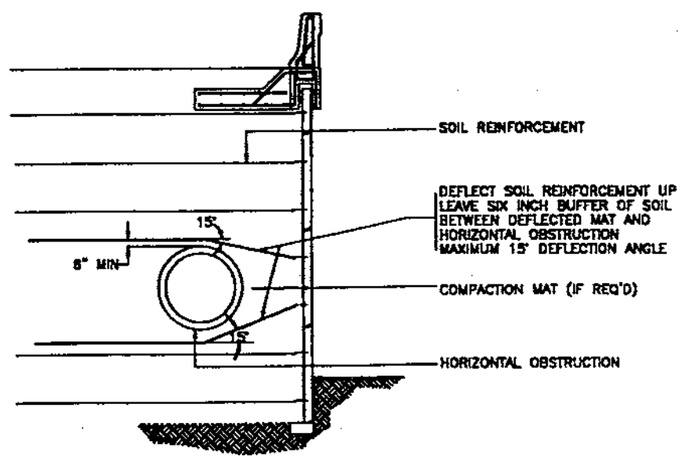

NOTE:
1. HORIZONTAL OBSTRUCTIONS REQUIRE SPECIAL DESIGN CONSIDERATIONS
2. THE DETAIL AS SHOWN IS FOR CONCEPT ONLY AND MAY VARY ON FINAL DESIGN
3. REFERENCE SPECIAL DESIGN CALCULATIONS FOR DETAILS AND COMPONENT TYPE AND SIZE

Drawing No.

E/02 HORIZONTAL OBSTRUCTION

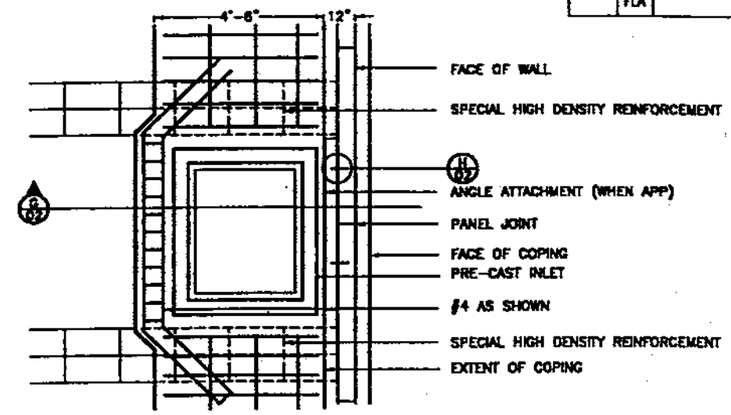

F/02 VERTICAL OBSTRUCTION

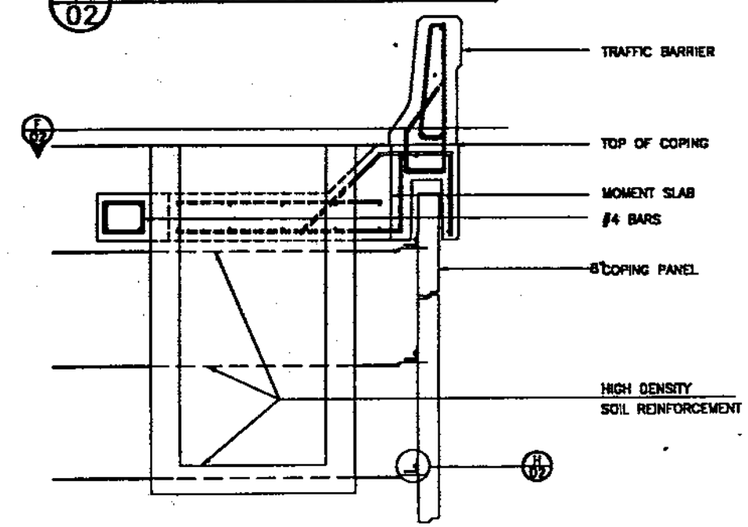

G/02 PANEL-TO-PANEL CONNECTION DETAIL

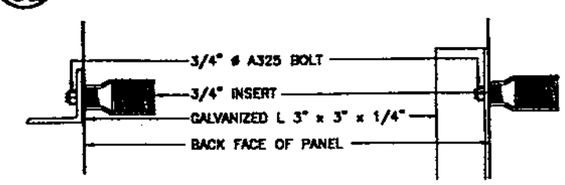

H/02 PANEL-TO-PANEL CONNECTION DETAIL

HILFIKER PRODUCTS ARE COVERED BY PATENTS AND PATENTS PENDING. MATERIAL CONTAINED HERE WITHIN CAN NOT BE REPRODUCED IN ANY FASHION WITHOUT WRITTEN CONSENT OF T&B STRUCTURAL SYSTEMS 4,280,398/4,394,908/4,343,572/4,117,688/4,329,098/4,505,621/5,484,235 OTHER U.S AND FOREIGN PATENTS PENDING

THE DESIGN CONTAINED IN THIS DRAWING IS BASED ON INFORMATION SUPPLIED BY THE FDOT CONSULTANT. T&B IS CERTIFYING THE INTERNAL STABILITY OF THE MSE WALL ONLY. ALL EXTERNAL STABILITY REQUIREMENTS ARE THE RESPONSIBILITY OF THE OWNER.

REVISIONS		
DATE	BY	DESCRIPTION

T&B STRUCTURAL SYSTEMS, INC.
ENGINEERED STRUCTURES
HILFIKER WALLS
HILFIKER BLOCK

FLORIDA DEPARTMENT OF TRANSPORTATION
STRUCTURES DESIGN OFFICE

ROAD NO.	COUNTY	PROJECT NO.
SR414	SEMINOLE	77002-3505

SHEET TITLE: LEVELING COURSE AND OBSTRUCTION DETAILS HILFIKER MSE 5' 5 PANEL WALL SYSTEM

PROJECT NAME: S.R.414 OVER S.R. 434

Drawing No.: HW02

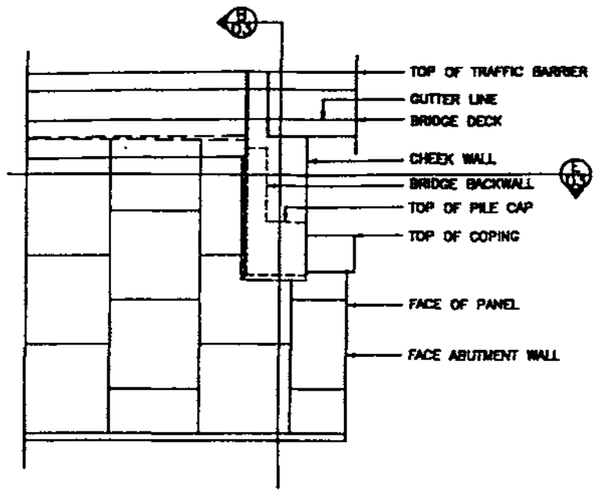

A 03 ELEVATION WING WALL

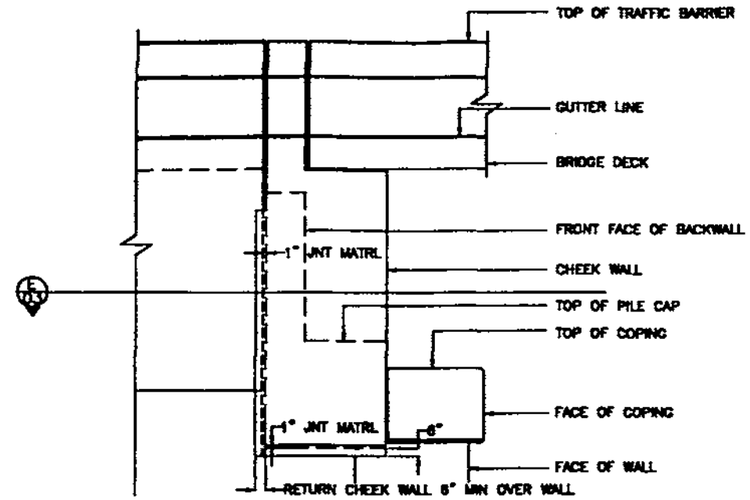

C 03 ELEVATION AT CHEEK WALL

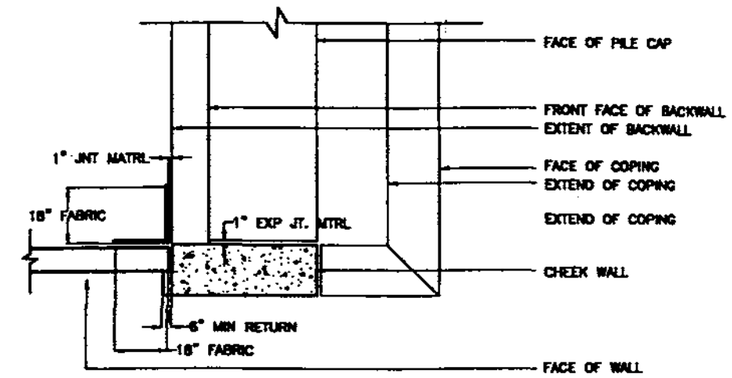

E 03 PLAN SECTION AT CHEEK WALL

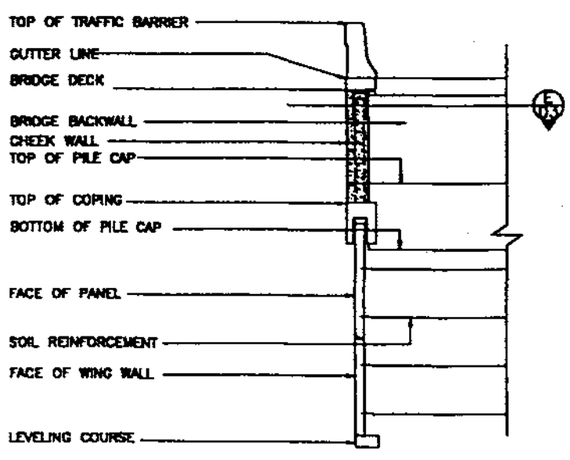

B 03 SECTION AT WING WALL

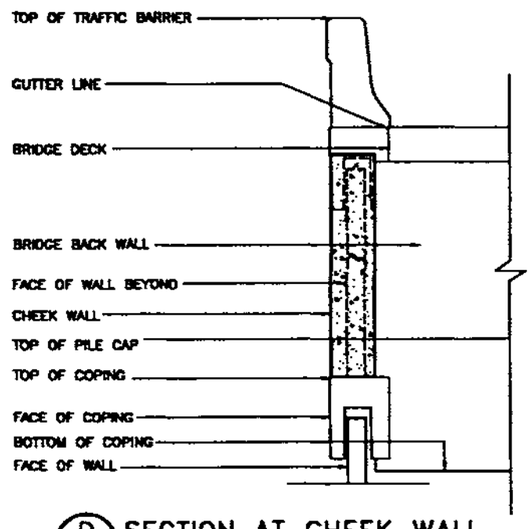

D 03 SECTION AT CHEEK WALL

HILFIKER PRODUCTS ARE COVERED BY PATENTS AND PATENTS PENDING. MATERIAL CONTAINED HERE WITHIN CAN NOT BE REPRODUCED IN ANY FASHION WITHOUT WRITTEN CONSENT OF T&B STRUCTURAL SYSTEMS 4,385,866/4,384,808/4,343,572/4,117,688/4,339,089/4,505,621/5,484,235 OTHER U.S AND FOREIGN PATENTS PENDING

THE DESIGN CONTAINED IN THIS DRAWING IS BASED ON INFORMATION SUPPLIED BY THE FDOT CONSULTANT. T&B IS CERTIFYING THE INTERNAL STABILITY OF THE MSE WALL ONLY. ALL EXTERNAL STABILITY REQUIREMENTS ARE THE RESPONSIBILITY OF THE OWNER.

REVISIONS

DATE	BY	DESCRIPTION

T&B STRUCTURAL SYSTEMS, INC.
ENGINEERED STRUCTURES
HILFIKER WALLS
HILFIKER BLOCK

SEAL:

FLORIDA DEPARTMENT OF TRANSPORTATION
STRUCTURES DESIGN OFFICE

ROAD NO.	COUNTY	PROJECT NO.
SR414	SEMINOLE	77002-3505

BRIDGE ABUTMENT CHEEK WALL DETAILS
HILFIKER MSE 5x5 PANEL WALL SYSTEM

PROJECT NAME: S.R.414 OVER S.R.434

Drawing No. HW03

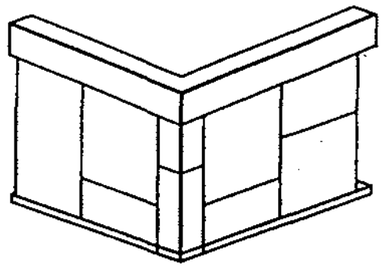

A 04 CORNER ISOMETRIC

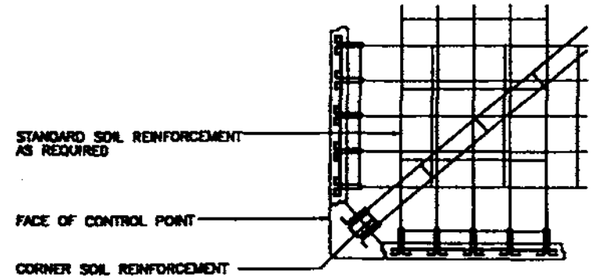

D 04 90° CORNER PLAN

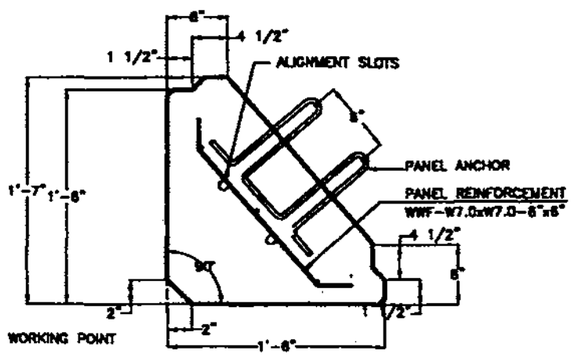

B 04 STANDARD 90° CORNER PANEL

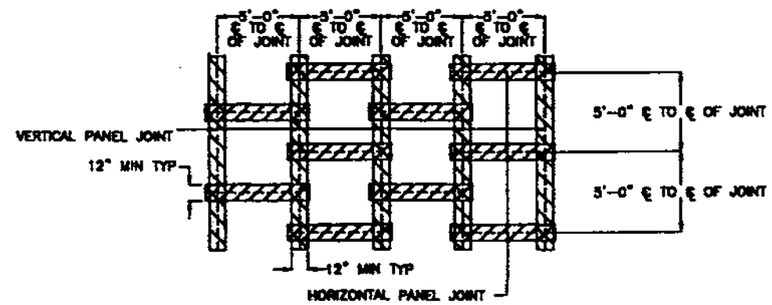

NOTE:
1. FILTER FABRIC SHALL VERTICAL AND HORIZONTAL JOINTS BE PLACED OVER ALL VERTICAL AND HORIZONTAL JOINTS
2. FABRIC SHALL BE TO BACK FACE OF PANEL WITH THE USE OF A APPROVED CONSTRUCTION ADHESIVE
3. MINIMUM OVER LAP OF 18:" REQUIRED BETWEEN ROLLS.

E 04 FILTER CLOTH - JOINT DETAIL

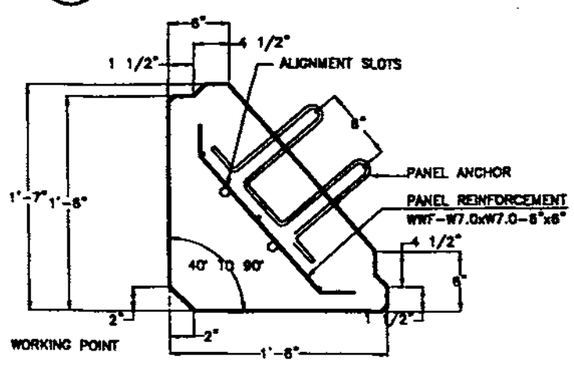

C 04 ADJUSTABLE CORNER PANEL

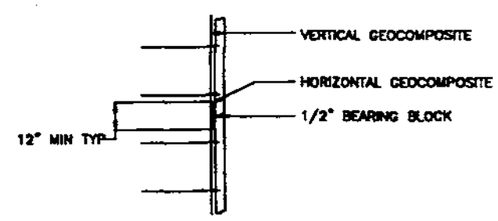

NOTE:
1. FILTER FABRIC PER FDOT SPECIFICATIONS SHALL BE PLACED OVER ALL VERTICAL AND HORIZONTAL JOINTS.
2. FABRIC SHALL BE TO BACK FACE OF PANEL WITH THE USE OF A APPROVED CONSTRUCTION ADHESIVE
3. MINIMUM OVER LAP OF 18:" REQUIRED BETWEEN ROLLS.

F 04 FILTER CLOTH - JOINT DETAIL

HILFIKER PRODUCTS ARE COVERED BY PATENTS AND PATENTS PENDING MATERIAL CONTAINED HERE WITHIN CAN NOT BE REPRODUCED IN ANY FASHION WITHOUT WRITTEN CONSENT OF T&B STRUCTURAL SYSTEMS 4,299,388/4,324,508/4,343,572/4,117,696/4,329,080/4,505,621/5,484,235 OTHER U.S AND FOREIGN PATENTS PENDING

THE DESIGN CONTAINED IN THIS DRAWING IS BASED ON INFORMATION SUPPLIED BY THE FDOT CONSULTANT. T&B IS CERTIFYING THE INTERNAL STABILITY OF THE MSE WALL ONLY. ALL EXTERNAL STABILITY REQUIREMENTS ARE THE RESPONSIBILITY OF THE OWNER.

REVISIONS		
DATE	BY	DESCRIPTION

T&B STRUCTURAL SYSTEMS, INC.
ENGINEERED STRUCTURES
HW
HILFIKER WALLS
HILFIKER BLOCK

SEAL:

FLORIDA DEPARTMENT OF TRANSPORTATION
STRUCTURES DESIGN OFFICE

ROAD NO.	COUNTY	PROJECT NO.
SR414	SEMINOLE	77002-3505

SHEET TITLE: CORNER AND JOINT DETAILS HILFIKER MSE 5 5 PANEL WALL SYSTEM

PROJECT NAME: S.R.414 OVER S.R.434

Drawing No.: HW04

W = WIDTH OF MAT
B = LENGTH OF MAT
Y = LONGITUDINAL SPACING
X = TRANSVERSE SPACING
C = CRIMPED END OF MAT
D = DISTAL END OF MAT

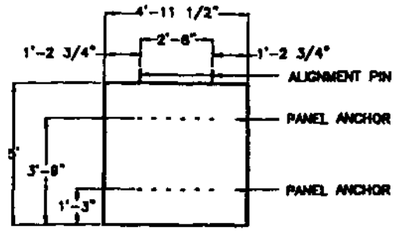

A 05 STANDARD PANEL ELEVATION

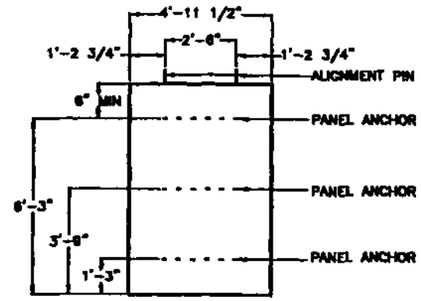

E 05 SPECIAL TOP PANEL ELEVATION

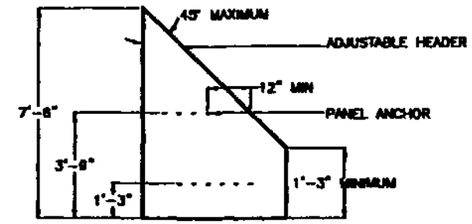

J 05 SLOPED TOP PANEL ELEVATION

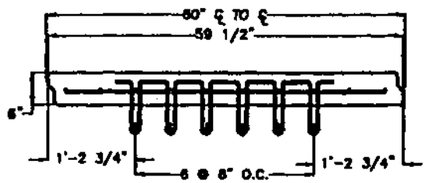

B 05 STANDARD PANEL PLAN

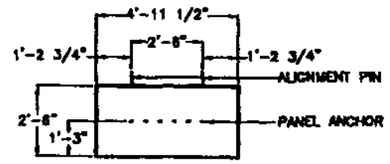

F 05 BOTTOM HALF PANEL ELEVATION

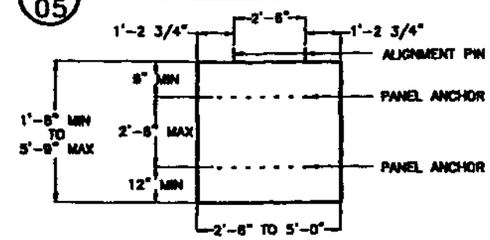

J 05 SPECIAL PANEL ELEVATION
NOTE: ANCHOR SPACING MAY VARY

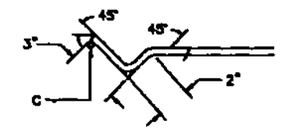

Q 05 SOIL REIN END CRIMP

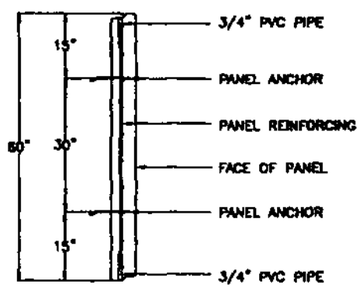

C 05 STANDARD PANEL SECTION

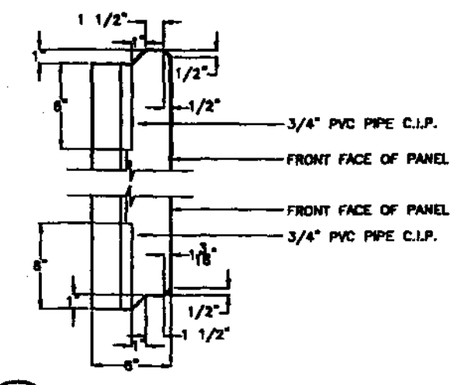

G 05 ALIGNMENT PIN DETAIL

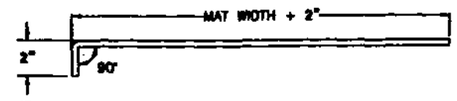

K 05 CONNECTION PIN DETAIL
PIN SHALL NOT BE SMALLER THAN SOIL REINFORCEMENT

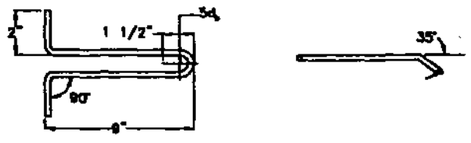

L 05 PANEL ANCHOR DETAIL
NOTE: ANCHOR SHALL NOT BE SMALLER THAN SOIL REINFORCEMENT

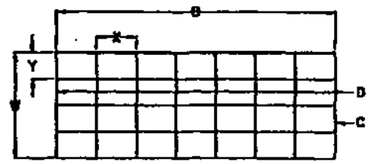

N 05 SOIL REINFORCEMENT PLAN

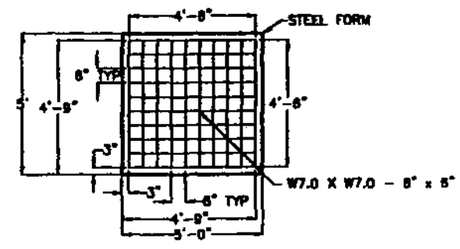

P 05 STANDARD PANEL REINFORCING

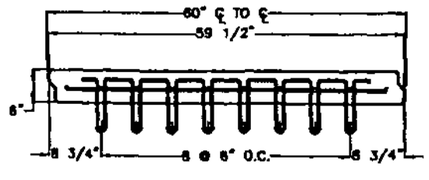

D 05 CONTINUOUS ANCHOR PLAN

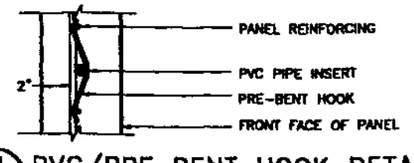

H 05 PVC/PRE BENT HOOK DETAIL

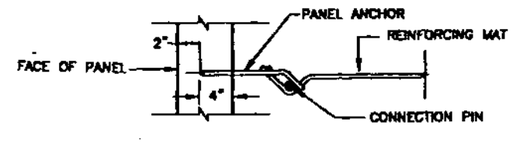

M 05 CONNECTION DETAIL

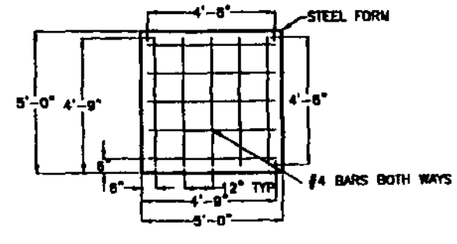

Q 05 OPTIONAL PANEL REINFORCING

HILFIKER PRODUCTS ARE COVERED BY PATENTS AND PATENTS PENDING. MATERIAL CONTAINED HERE WITHIN CAN NOT BE REPRODUCED IN ANY FASHION WITHOUT WRITTEN CONSENT OF T&B STRUCTURAL SYSTEMS. 4,299,284/4,324,508/4,343,572/4,117,688/4,329,086/4,505,621/5,484,235 OTHER U.S. AND FOREIGN PATENTS PENDING

THE DESIGN CONTAINED IN THIS DRAWING IS BASED ON INFORMATION SUPPLIED BY THE FDOT CONSULTANT. T&B IS CERTIFYING THE INTERNAL STABILITY OF THE MSE WALL ONLY. ALL EXTERNAL STABILITY REQUIREMENTS ARE THE RESPONSIBILITY OF THE OWNER.

REVISIONS

DATE	BY	DESCRIPTION

T&B STRUCTURAL SYSTEMS, INC.
ENGINEERED STRUCTURES
HW
HILFIKER WALLS
HILFIKER BLOCK

SEAL:

FLORIDA DEPARTMENT OF TRANSPORTATION
STRUCTURES DESIGN OFFICE

ROAD NO.	COUNTY	PROJECT NO.
SR414	SEMINOLE	77002-3505

SHEET TITLE: STANDARD PANEL DETAILS
HILFIKER MSE 5' 5 PANEL WALL SYSTEM

PROJECT NAME: S.R.414 OVER S.R.434

Drawing No.: HW05

FLA | W-40

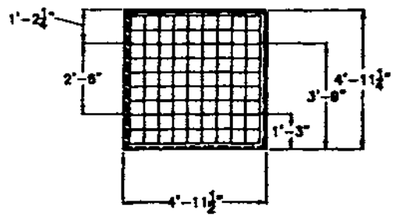

PANEL MATERIAL LIST		
DESG.	SIZE AND TYPE	QTY.
ANCHOR	W12	2 OF 8
CAGE	WWF-W7.0xW7.0-8"x8"	1
PVC	3/4" ø	4
HOOK	PRE-BENT	4

STANDARD 60" PANEL

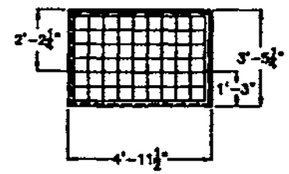

PANEL MATERIAL LIST		
DESG.	SIZE AND TYPE	QTY.
ANCHOR	W12	1 OF 8
CAGE	WWF-W7.0xW7.0-8"x8"	1
PVC	3/4" ø	4
HOOK	PRE-BENT	4

SPECIAL 42" PANEL

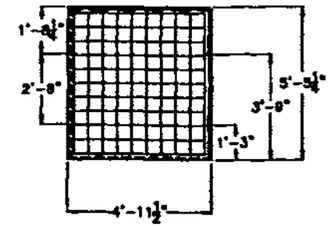

PANEL MATERIAL LIST		
DESG.	SIZE AND TYPE	QTY.
ANCHOR	W12	2 OF 8
CAGE	WWF-W7.0xW7.0-8"x8"	1
PVC	3/4" ø	4
HOOK	PRE-BENT	4

SPECIAL 66" PANEL

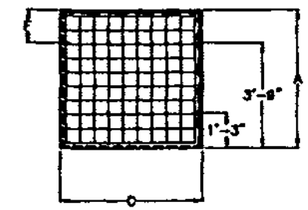

PANEL MATERIAL LIST		
DESG.	SIZE AND TYPE	QTY.
ANCHOR	W12	VARIES
CAGE	WWF-W7.0xW7.0-8"x8"	1
PVC	3/4" ø	4
HOOK	PRE-BENT	4

SPECIAL HEIGHT PANEL

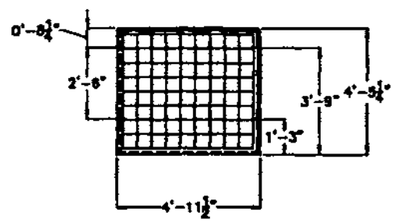

PANEL MATERIAL LIST		
DESG.	SIZE AND TYPE	QTY.
ANCHOR	W12	2 OF 8
CAGE	WWF-W7.0xW7.0-8"x8"	1
PVC	3/4" ø	4
HOOK	PRE-BENT	4

SPECIAL 54" PANEL

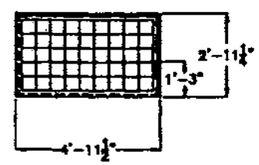

PANEL MATERIAL LIST		
DESG.	SIZE AND TYPE	QTY.
ANCHOR	W12	1 OF 8
CAGE	WWF-W7.0xW7.0-8"x8"	1
PVC	3/4" ø	4
HOOK	PRE-BENT	4

SPECIAL 36" PANEL

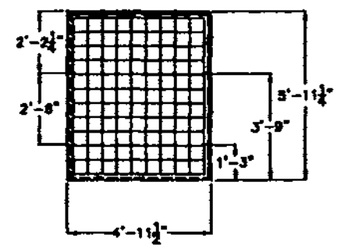

PANEL MATERIAL LIST		
DESG.	SIZE AND TYPE	QTY.
ANCHOR	W12	2 OF 8
CAGE	WWF-W7.0xW7.0-8"x8"	1
PVC	3/4" ø	4
HOOK	PRE-BENT	4

SPECIAL 72" PANEL

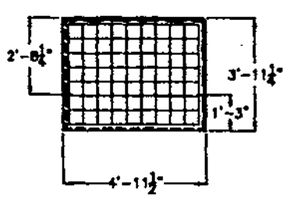

PANEL MATERIAL LIST		
DESG.	SIZE AND TYPE	QTY.
ANCHOR	W12	1 OF 8
CAGE	WWF-W7.0xW7.0-8"x8"	1
PVC	3/4" ø	4
HOOK	PRE-BENT	4

SPECIAL 48" PANEL

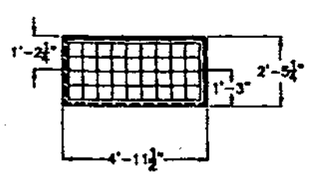

PANEL MATERIAL LIST		
DESG.	SIZE AND TYPE	QTY.
ANCHOR	W12	1 OF 8
CAGE	WWF-W7.0xW7.0-8"x8"	1
PVC	3/4" ø	4
HOOK	PRE-BENT	4

SPECIAL 30" PANEL

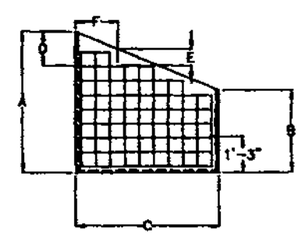

PANEL MATERIAL LIST		
DESG.	SIZE AND TYPE	QTY.
ANCHOR	W12	VARIES
CAGE	WWF-W7.0xW7.0-8"x8"	1
PVC	3/4" ø	4
HOOK	PRE-BENT	4

SPECIAL SLOPED PANEL

HILFIKER PRODUCTS ARE COVERED BY PATENTS AND PATENTS PENDING. MATERIAL CONTAINED HERE WITHIN CAN NOT BE REPRODUCED IN ANY FASHION WITHOUT WRITTEN CONSENT OF T&B STRUCTURAL SYSTEMS 4,889,384/4,904,503/4,943,572/4,117,688/4,329,089/4,503,621/5,484,235 OTHER U.S. AND FOREIGN PATENTS PENDING

THE DESIGN CONTAINED IN THIS DRAWING IS BASED ON INFORMATION SUPPLIED BY THE FDOT CONSULTANT. T&B IS CERTIFYING THE INTERNAL STABILITY OF THE MSE MASS ONLY. ALL EXTERNAL STABILITY REQUIREMENTS ARE THE RESPONSIBILITY OF THE OWNER.

REVISIONS

DATE	BY	DESCRIPTION

T&B STRUCTURAL SYSTEMS, INC.
ENGINEERED STRUCTURES
HILFIKER WALLS — HILFIKER BLOCK

SEAL:

FLORIDA DEPARTMENT OF TRANSPORTATION
STRUCTURES DESIGN OFFICE

ROAD NO.	COUNTY	PROJECT NO.
SR414	SEMINOLE	77002-3505

SHEET TITLE: PRE-CASTER PANEL DETAIL SHEET
HILFIKER MSE 5# 5 PANEL WALL SYSTEM

PROJECT NAME: S.R.414 OVER S.R.434

Drawing No.: HW06

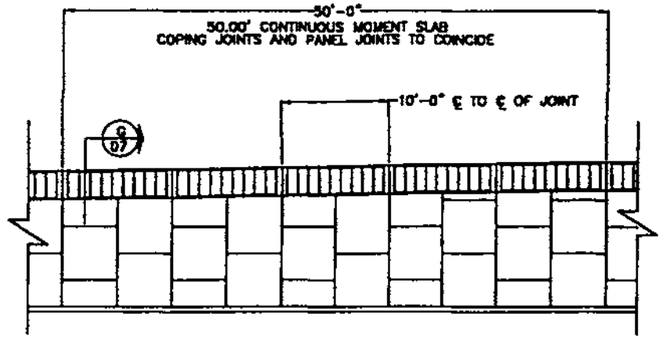

A 07 PRECAST COPING ELEVATION

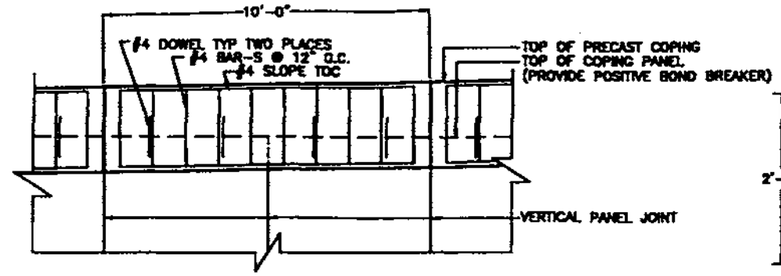

NOTE:
PLACE PRE-CAST COPING SO JOINTS LINE UP WITH COPING PANEL BELOW. USE GROUT TO BRING TOP COPING PANEL TO GRADE.

D 07 PRECAST COPING PARTIAL ELEVATION

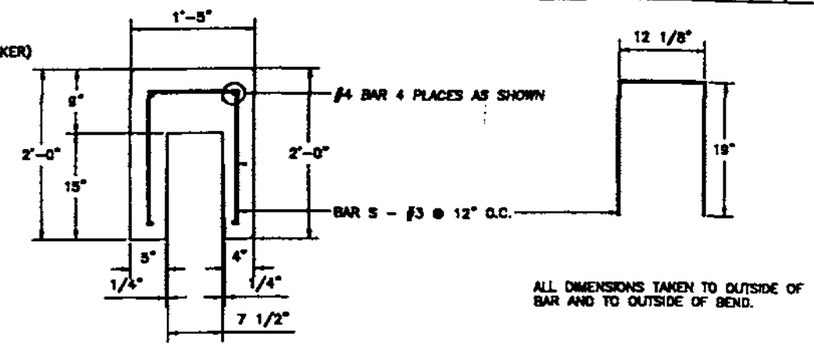

ALL DIMENSIONS TAKEN TO OUTSIDE OF BAR AND TO OUTSIDE OF BEND.

G 07 PRECAST COPING DETAIL - A

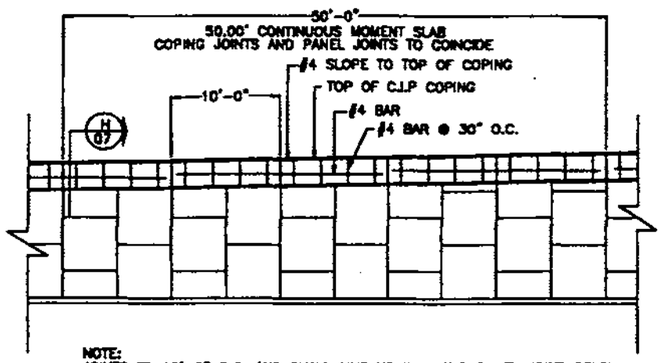

NOTE:
JOINTS TO 10'-0" O.C. AND SHALL LINE UP WITH THE PANEL JOINT BELOW

B 07 PRECAST COPING ELEVATION

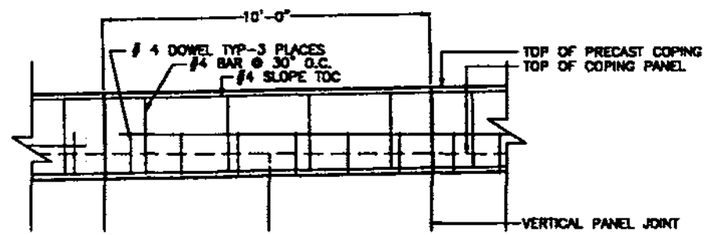

NOTE:
PLACE PRE-CAST COPING SO JOINTS LINE UP WITH COPING PANEL BELOW. USE GROUT TO BRING TOP COPING PANEL TO GRADE.

E 07 C.I.P. COPING PARTIAL ELEVATION

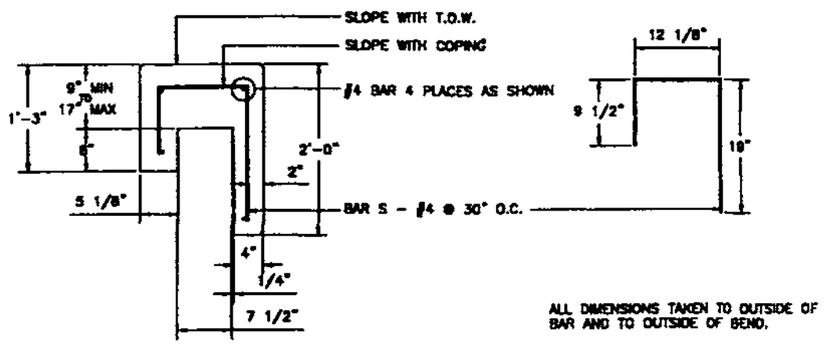

ALL DIMENSIONS TAKEN TO OUTSIDE OF BAR AND TO OUTSIDE OF BEND.

ALL DIMENSIONS AS SHOWN ARE MINIMUMS

H 07 PRECAST/C.I.P. COPING - DETAIL B

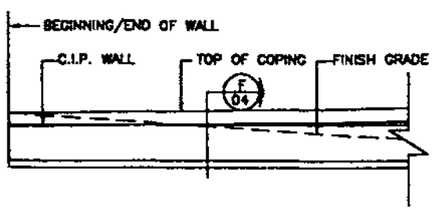

C 07 COPING ENCLOSURE ELEVATION

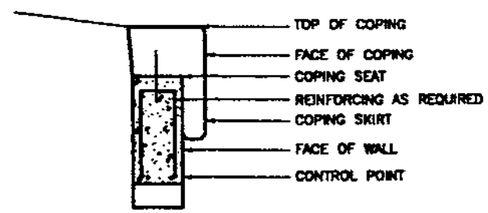

NOTE:
1. CLOSURE DETAIL FOR CONCEPT ONLY
2. REINFORCING AND SIZE VARIES PER PROJECT

F 07 COPING ENCLOSURE SECTION

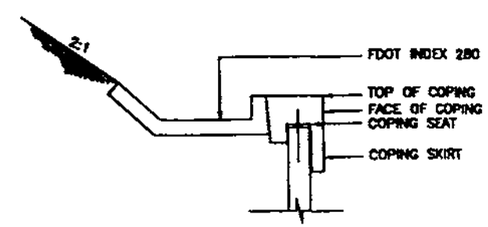

I 07 COPING-DRAINAGE SECTION DETAIL

HILFIKER PRODUCTS ARE COVERED BY PATENTS AND PATENTS PENDING. MATERIAL CONTAINED HERE WITHIN CAN NOT BE REPRODUCED IN ANY FASHION WITHOUT WRITTEN CONSENT OF T&B STRUCTURAL SYSTEMS 4,890,298/4,924,908/4,943,173/4,117,886/4,329,089/4,305,821/5,484,235 OTHER U.S AND FOREIGN PATENTS PENDING

THE DESIGN CONTAINED IN THIS DRAWING IS BASED ON INFORMATION SUPPLIED BY THE FDOT CONSULTANT. T&B IS CERTIFYING THE INTERNAL STABILITY OF THE MSE WALL ONLY. ALL EXTERNAL STABILITY REQUIREMENTS ARE THE RESPONSIBILITY OF THE OWNER.

REVISIONS

DATE	BY	DESCRIPTION

T&B STRUCTURAL SYSTEMS, INC.
ENGINEERED STRUCTURES
HILFIKER WALLS HILFIKER BLOCK

SEAL:

FLORIDA DEPARTMENT OF TRANSPORTATION
STRUCTURES DESIGN OFFICE

ROAD NO.	COUNTY	PROJECT NO.
SR414	SEMINOLE	77002-3505

SHEET TITLE: SPECIAL SYSTEM DETAILS HILFIKER MSE 5 5 PANEL WALL SYSTEM

PROJECT NAME: S.R.414 OVER S.R.434

Drawing No. HW07

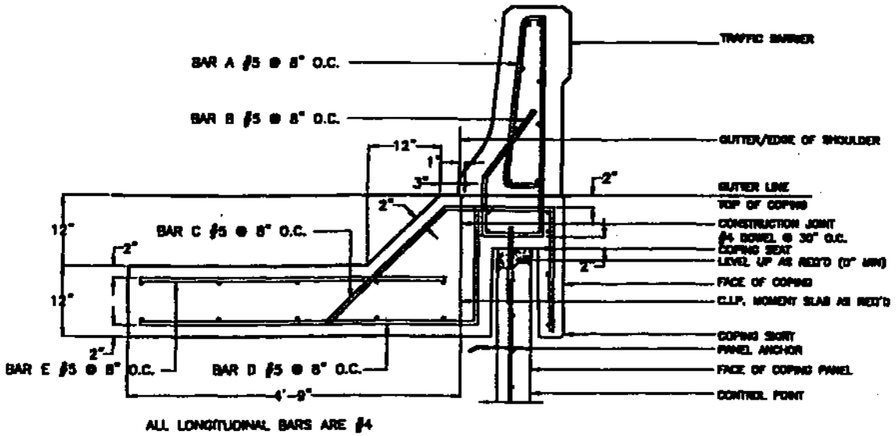

ALL LONGITUDINAL BARS ARE #4

FDOT BARRIER RE: FL INDEX 700 FOR DIMENSIONS
FOR COPING DIMENSIONS RE SHEET HW07-G/07

A 08 PRECAST COPING WITH C.I.P. BARRIER

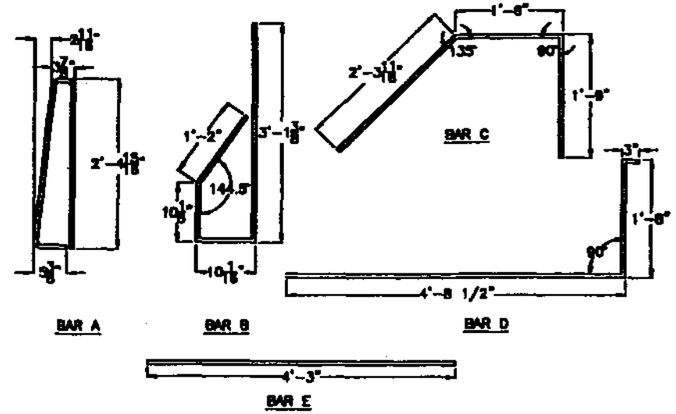

REBAR SCHEDULE

MARK	SIZE	QTY	LENGTH	BENDING
A	#4	11	AS DETAILED	AS DETAILED
B	#4	11	AS DETAILED	AS DETAILED
C	#4	11	AS DETAILED	AS DETAILED
D	#4	11	AS DETAILED	AS DETAILED

QUANTITIES SHOWN ARE FOR A 10'-0" COPING SECTION

B 08 PRECAST BARRIER/COPING REINFORCING

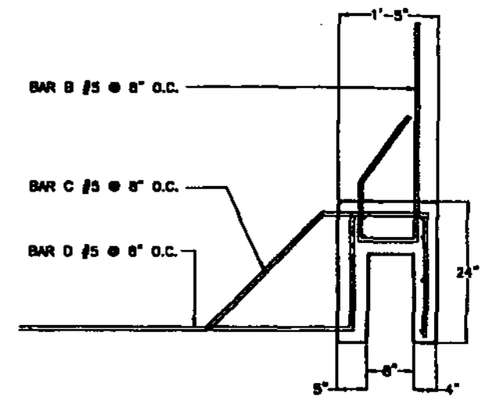

DIMENSIONS NOT SHOWN FOR CLARITY RE: SHEET HW07
FOR DIMENSIONS OF COPING UNIT

C 08 PRECAST COPING LAYOUT

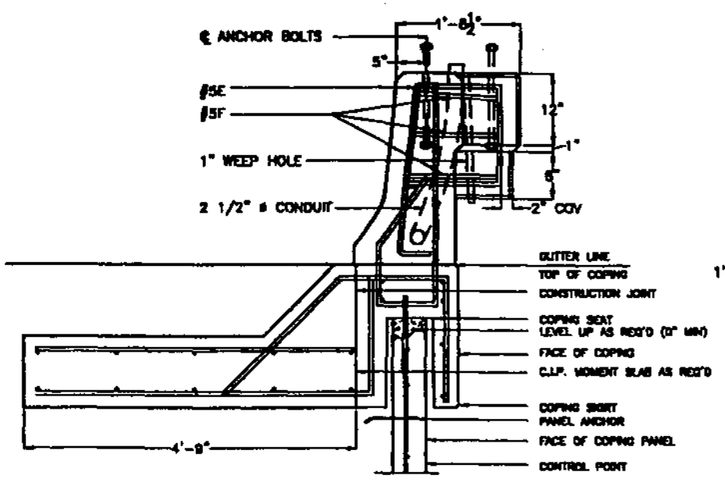

FDOT LIGHT POLE PILASTER: FL INDEX 500 FOR DIMENSIONS
FOR COPING DIMENSIONS RE SHEET HW07-G/07

D 08 PRECAST COPING WITH PILASTER SECTION

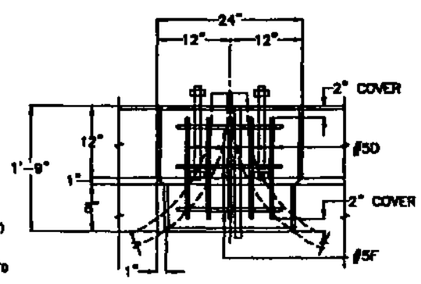

FDOT LIGHT POLE PILASTER: FL INDEX 500 FOR DIMENSIONS

E 08 PILASTER ELEVATION

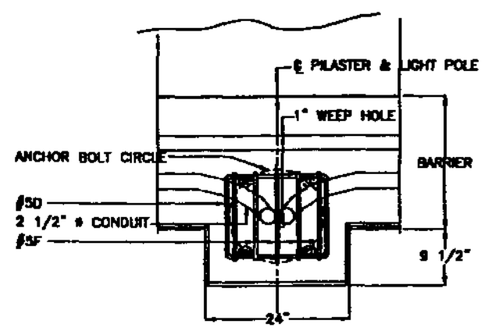

FDOT LIGHT POLE PILASTER: FL INDEX 500 FOR DIMENSIONS

F 08 PILASTER PLAN VIEW

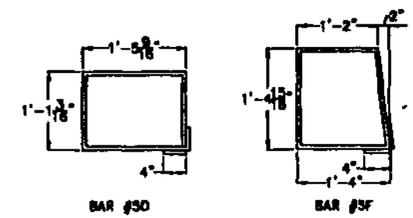

REBAR SCHEDULE

MARK	SIZE	QTY	LENGTH	BENDING
D	#4	5	AS DETAILED	AS DETAILED
F	#4	3	AS DETAILED	AS DETAILED

G 08 PILASTER REINFORCING SCHEDULE

HILFIKER PRODUCTS ARE COVERED BY PATENTS AND PATENTS PENDING. MATERIAL CONTAINED HERE WITHIN CAN NOT BE REPRODUCED IN ANY FASHION WITHOUT WRITTEN CONSENT OF T&B STRUCTURAL SYSTEMS 4,390,308/4,394,209/4,343,573/4,117,688/4,329,089/4,375,921/5,484,235 OTHER U.S. AND FOREIGN PATENTS PENDING

THE DESIGN CONTAINED IN THIS DRAWING IS BASED ON INFORMATION SUPPLIED BY THE FDOT CONSULTANT. T&B IS CERTIFYING THE INTERNAL STABILITY OF THE MSE WALL ONLY. ALL EXTERNAL STABILITY REQUIREMENTS ARE THE RESPONSIBILITY OF THE OWNER.

REVISIONS

DATE	BY	DESCRIPTION

T&B STRUCTURAL SYSTEMS, INC.
ENGINEERED STRUCTURES
HILFIKER WALLS — HILFIKER BRIDGE

SEAL:

FLORIDA DEPARTMENT OF TRANSPORTATION
STRUCTURES DESIGN OFFICE

ROAD NO.	COUNTY	PROJECT NO.
SR414	SEMINOLE	77002-3505

SHEET TITLE: COPING DETAILS
HILFIKER MSE 5# 5 PANEL WALL SYSTEM

PROJECT NAME: S.R.414 OVER S.R.434

Drawing No. HW08

FED. ROAD DIV. NO.	STATE	PROJECT NO.	FISCAL YEAR	SHEET NO.
3	FLA.			325

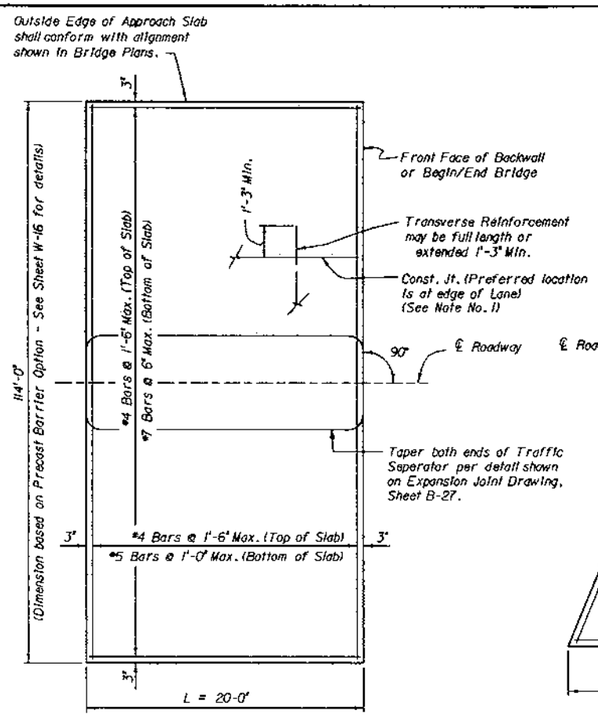

CASE I
(See Note No. 2)

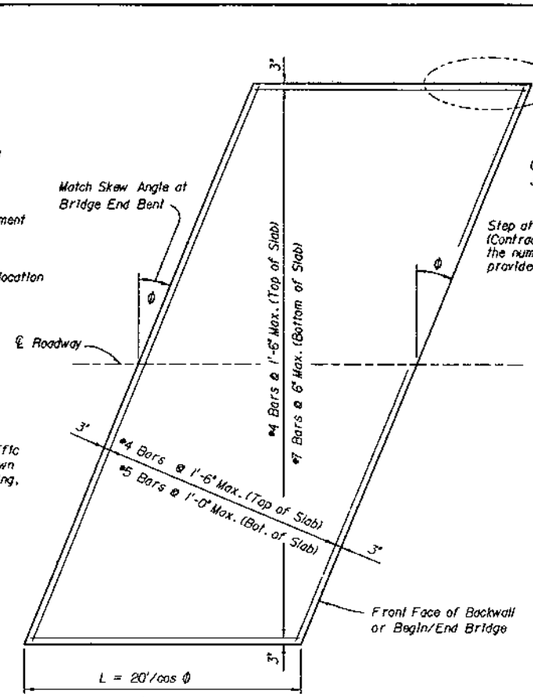

CASE II
(See Note No. 3)

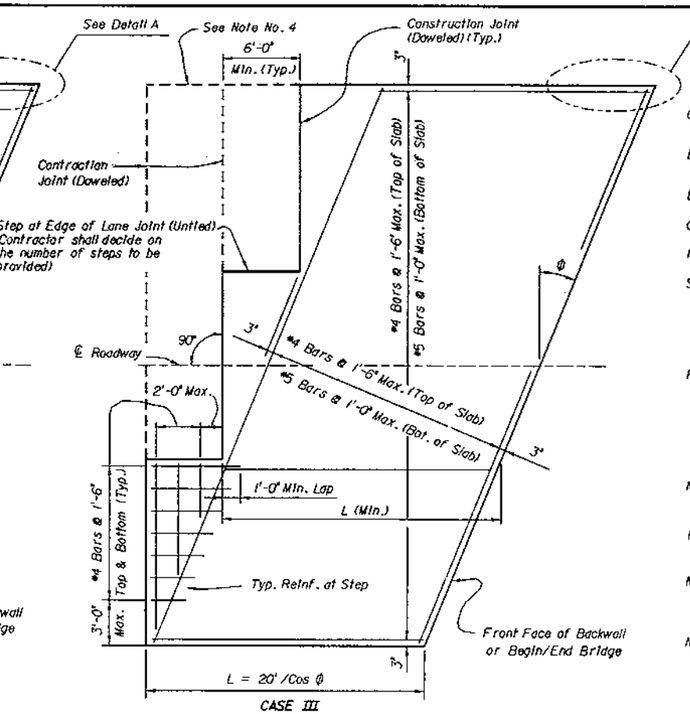

CASE III
(See Note No. 4)

GENERAL NOTES

GENERAL SPECIFICATIONS: Florida Department of Transportation Standard Specifications for Road & Bridge Construction, current edition and Supplements thereto.

DESIGN SPECIFICATIONS: Standard Specifications for Highway Bridges (AASHTO), current edition and approved revisions.

DESIGN LOADING: HS20

CONCRETE: Class II (Bridge Deck). All environments.

REINFORCING STEEL: ASTM A615, Grade 60.

SURFACE TREATMENT: Same as Bridge. Grooving of the riding surface is a Bridge Pay Item. See Bridge Plans. If the work does not involve grooving of the bridge, then the riding surface of the approach slab shall be grooved in accordance with Section 400-15.2.5 of the Specifications, and payment shall be included in the bid price for Concrete Approach Slabs.

PAYMENT: Payment shall be made under: Item No. 350-1, Concrete Approach Slab - Each. The work shall comply with details on this sheet, Section 350 of the Specifications, Bridge Plans, and Roadway Plans. The bid price and payment shall be full compensation for all work and materials specified. And, unless otherwise noted in the Plans, the bid price shall include all items that are placed on the slab, such as: sidewalks, traffic separator (concrete and reinforcing steel), barriers, etc.

NOTE No. 1: When a longitudinal joint is necessary or allowed by the Engineer, the transverse steel shall be extended as shown.

NOTE No. 2: The plan view for case CASE I applies when the skew angle = 0. Relevant details also apply to cases II and III.

NOTE No. 3: The plan view for CASE II applies where the skew angle ≠ 0, and the roadway pavement is flexible. The slab as shown is skewed to the right; a left skew shall be treated similarly.

NOTE No. 4: The plan view for case III, applies where the skew angle at the bridge end ≠ 0 and the roadway pavement is rigid (concrete). The slab is skewed at the bridge end and normal at the roadway end. The slab as shown is skewed to the right; a left skew shall be treated similarly. The slab may be constructed with steps as shown or without steps. In either case, the shown reinforcement shall be utilized, and Dowels shall be provided in accordance with Indices 305 and 306 (Roadway and Traffic Design Standards).

NOTE No. 5: If the Bridge or Roadway Plans indicate a raised sidewalk(s), traffic separator and/or any type of railing on the approach slab, these shall be provided as shown.

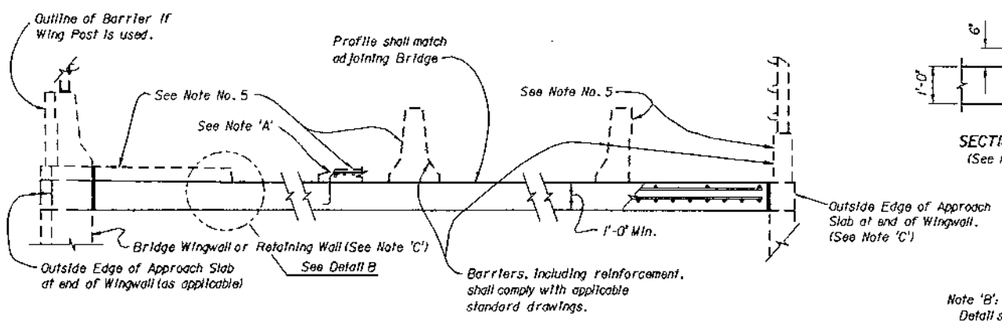

TRANSVERSE SECTION

Note 'A':
Reinforcing steel to match Reinforcing Bar Details in Traffic Separator, shown on Superstructure Section Sheet B-17.

Note 'C': If Wingwall/Retaining Wall is not used, mount railing system on Approach Slab.

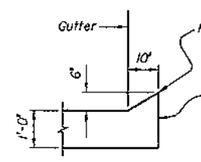

SECTION C-C
(See Note 'B')

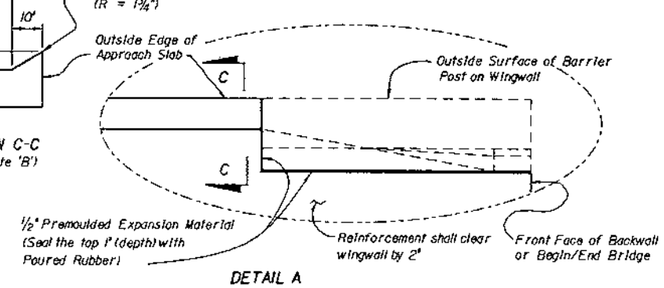

DETAIL A
(Part Plan)

Note 'B':
Detail shown on Section C-C applies beyond Wing Post for Traffic Railing Barrier along the edge of the Bridge. This detail does not apply at raised sidewalk.

* ESTIMATED QUANTITIES		
ITEM	UNIT	QUANTITY
Concrete	C.Y.	0.333
Reinforcing Steel	LB.	54.200

* Quantities shown are per square yard (plan area), and do not include items placed on the slab such as: sidewalks, traffic separator and barriers.

NOTE: Total area of Approach Slab is given in the Bridge Plans.

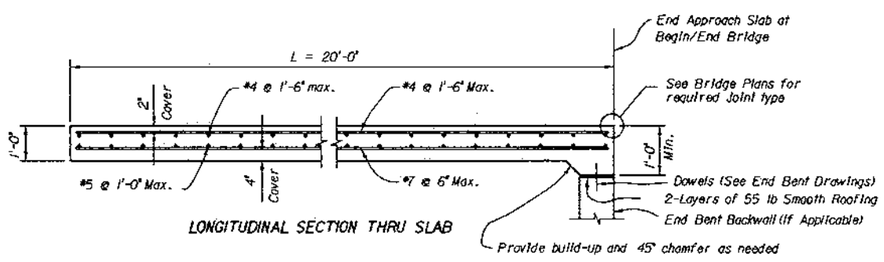

LONGITUDINAL SECTION THRU SLAB

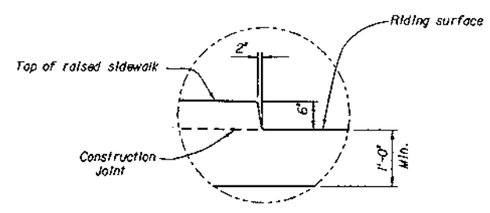

DETAIL B

REVISIONS					
Date	By	Description	Date	By	Description
			94R		

	Names	Dates
Drawn by	KAC	10/97
Checked by	MH	10/97
Designed by	MH	10/97
Checked by	MSE	10/97
Approved by	MARK S. EICHOLTZ	

ENGINEER OF RECORD:
URS Greiner
P.O. BOX 31646, 7650 WEST COURTNEY CAMPBELL CAUSEWAY
TAMPA, FLORIDA 33607-1462

LOGO: URS Greiner

SEAL: Mark S. Eicholtz 3/2/98

FLORIDA DEPARTMENT OF TRANSPORTATION
STRUCTURES DESIGN OFFICE

ROAD NO.	COUNTY	PROJECT NO.
SR 414	SEMINOLE	77002-3505

SHEET TITLE: APPROACH SLABS

PROJECT NAME: S.R. 414 OVER S.R. 434

Drawing No. 1 of 1

Index No.

23 FEB 98 11:34:25

Appendix C
Bridge Inspection Reports

Appendix C: Bridge Inspection Reports

1. **SR 414 Over US 441 (Bridge No. 750743)**
2. **SR 414 Over Lake Bosse (Bridge No. 770074)**
3. **SR 414 Over Little Wekiva River (Bridge No. 770075)**
4. **SR 414 Over SR 434 (Bridge No. 770083)**

FLORIDA DEPARTMENT OF TRANSPORTATION
BRIDGE MANAGEMENT SYSTEM
Inspection/CIDR Report
Inspection

Structure ID: 750743

DISTRICT: D5 - Deland **INSPECTION DATE: 6/13/2019 LEVU**

BY:	Kisinger Campo and Assoc.	STRUCTURE NAME:	SR-414 over US-441
OWNER:	31 State Toll Authority	YEAR BUILT:	2009
MAINTAINED BY:	31 State Toll Authority	SECTION NO.:	75 340 000
STRUCTURE TYPE:	3 Steel - 02 Stringer/Girder	MP:	0.224
LOCATION:	SR-414 over US-441	ROUTE:	00414
SERV. TYPE ON:	1 Highway	FACILITY CARRIED:	SR-414
SERV. TYPE UNDER:	1 Highway	FEATURE INTERSECTED:	US-441

☐ FUNCTIONALLY OBSOLETE ☐ STRUCTURALLY DEFICIENT

TYPE OF INSPECTION: Regular NBI

DATE FIELD INSPECTION WAS PERFORMED: ABOVE WATER: 6/13/2019 UNDERWATER: N/A

SUFFICIENCY RATING: 90.2
HEALTH INDEX: 99.79

This report contains information relating to the physical security of a structure and depictions of the structure. This information is confidential and exempt from public inspection pursuant to sections 119.071(3)(a) and 119.071(3)(b), Florida Statutes. Only the cover page of this report may be inspected and copied.

FLORIDA DEPARTMENT OF TRANSPORTATION
BRIDGE MANAGEMENT SYSTEM
Inspection/CIDR Report
Inspection

Structure ID: 750743

DISTRICT: D5 - Deland **INSPECTION DATE: 6/13/2019 LEVU**

BY:	Kisinger Campo and Assoc.	STRUCTURE NAME:	SR-414 over US-441
OWNER:	31 State Toll Authority	YEAR BUILT:	2009
MAINTAINED BY:	31 State Toll Authority	SECTION NO.:	75 340 000
STRUCTURE TYPE:	3 Steel - 02 Stringer/Girder	MP:	0.224
LOCATION:	SR-414 over US-441	ROUTE:	00414
SERV. TYPE ON:	1 Highway	FACILITY CARRIED:	SR-414
SERV. TYPE UNDER:	1 Highway	FEATURE INTERSECTED:	US-441

☐ THIS BRIDGE CONTAINS FRACTURE CRITICAL COMPONENTS

☐ THIS BRIDGE IS SCOUR CRITICAL

☐ THIS REPORT IDENTIFIES DEFICIENCIES WHICH REQUIRE PROMPT CORRECTIVE ACTION

☐ FUNCTIONALLY OBSOLETE ☐ STRUCTURALLY DEFICIENT

TYPE OF INSPECTION: Regular NBI

DATE FIELD INSPECTION WAS PERFORMED: ABOVE WATER: 6/13/2019 UNDERWATER: N/A

OVERALL NBI RATINGS:

DECK:	8 Very Good	CHANNEL:	N N/A (NBI)
SUPERSTRUCTURE:	8 Very Good	CULVERT:	N N/A (NBI)
SUBSTRUCTURE:	8 Very Good	SUFF. RATING:	90.2
PERF. RATING:	Excellent	HEALTH INDEX:	99.79

FIELD PERSONNEL / TITLE / NUMBER: **INITIALS**

McMinn, Brice - Bridge Inspector (CBI#00405) (lead) Brice E McMinn Digitally signed by Brice E McMinn Date: 2019.07.31 12:02:51 -04'00'

Harrison, LaShawn - Bridge Inspector (CBI #00590)

REVIEWING BRIDGE INSPECTION SUPERVISOR:

Eckert, Chris - Senior QC Inspector (CBI #00198) Christopher J Eckert Digitally signed by Christopher J Eckert Date: 2019.07.31 12:12:10 -04'00'

CONFIRMING REGISTERED PROFESSIONAL ENGINEER:

LoCicero, Thomas - PE #31136 Kisinger Campo & Associates
4524 Oak Fair Blvd.
Certificate of Authorization #2317
Tampa FL 33610

SIGNATURE: Thomas A LoCicero Digitally signed by Thomas A LoCicero Date: 2019.07.31 13:56:11 -04'00'

DATE:

THOMAS LOCICERO LICENSE No. 31136 STATE OF FLORIDA PROFESSIONAL ENGINEER

The official record of this package has been electronically signed and sealed using a Digital Signature as required by 61G15-23.004 F.A.C. on the date adjacent to the seal. Printed copies of this document are not considered signed and sealed and the signature must be verified on any electronic copies.

This report contains information relating to the physical security of a structure and depictions of the structure. This information is confidential and exempt from public inspection pursuant to sections 119.071(3)(a) and 119.071(3)(b), Florida Statutes. Only the cover page of this report may be inspected and copied.

FLORIDA DEPARTMENT OF TRANSPORTATION
BRIDGE MANAGEMENT SYSTEM
Inspection/CIDR Report
Inspection

Structure ID: 750743

DISTRICT: D5 - Deland **INSPECTION DATE: 6/13/2019 LEVU**

All Elements

DECKS : Decks/Slabs

Str Unit	Elem/Env	Description	Qty1	%1	Qty2	%2	Qty3	%3	Qty4	%4	T Qty
Structure Unit 1	12 / 3	Re Concrete Deck	26552	100	0	.	0	.	0	.	26552 sq.ft

Element Inspection Notes:

12/3 Note: The deck underside is not visible due to galvanized steel stay-in-place forms. There is under bridge deck lighting attached to the deck underside in Bays 1-1, 1-5, 1-9 and 1-12. There is a 6in. diameter fiberglass utility attached to the deck underside in Bays 1 and 12.

CS1 = There are two longitudinal cracks up to 6ft. long x 1/64in. wide in Lane 7 deck top at Abutment 1 - NEW.

INCIDENTAL:
There is a light accumulation of dirt and debris in the shoulder areas - NO CHANGE.

DECKS : Joints

Str Unit	Elem/Env	Description	Qty1	%1	Qty2	%2	Qty3	%3	Qty4	%4	T Qty
Structure Unit 1	301 / 3	Pourable Joint Seal	282	97.24	0	.	8	2.76	0	.	290 ft
Structure Unit 1	2320 / 3	Seal Adhesion	0	.	0	.	8	100	0	.	8 ft

Element Inspection Notes:

301/3 Note: The quantity was field verified and changed from 320ft. to 290ft.

CS3 2320 = Abutment 1 joint has four areas of adhesion loss up to 2ft. in the right shoulder and in Lane 7 - NEW. Refer to photo 1. (6FT)

CS3 2320 = Abutment 2 joint has a 6in. long area of adhesion loss in the right wheel path in Lanes 5 and 7 - NEW. (2FT)

CS1 = The concrete headers along each expansion joint has a total of 11 longitudinal cracks up to 24in. long x <1/32in. wide - NO CHANGE.

INCIDENTAL:
There is a light accumulation of dirt and debris in the shoulder area of the joints - NO CHANGE.

2320/3 Refer to Parent Element

MISCELLANEOUS : Other Elements

Str Unit	Elem/Env	Description	Qty1	%1	Qty2	%2	Qty3	%3	Qty4	%4	T Qty
Structure Unit 1	321 / 3	Re Conc Approach Slab	8280	100	0	.	0	.	0	.	8280 sq.ft
Structure Unit 1	510 / 3	Wearing Surfaces	7560	100	0	.	0	.	0	.	7560 sq.ft

Element Inspection Notes:

321/3 Note: The approach slabs are not visible due to an overlay of asphalt with the exception of 24in. exposed concrete headers at both abutment joints.

PREVIOUS RECOMMENDATION CORRECTIVE ACTION:

This report contains information relating to the physical security of a structure and depictions of the structure. This information is confidential and exempt from public inspection pursuant to sections 119.071(3)(a) and 119.071(3)(b), Florida Statutes. Only the cover page of this report may be inspected and copied.

FLORIDA DEPARTMENT OF TRANSPORTATION
BRIDGE MANAGEMENT SYSTEM
Inspection/CIDR Report
Inspection

Structure ID: 750743

DISTRICT: D5 - Deland **INSPECTION DATE: 6/13/2019 LEVU**

Remove dirt and debris in northwest corner of west approach slab. 4MH

CORRECTIVE ACTION EVALUATION:
The corrective action noted above has been completed; however, no work order exists on file.

510/3 INCIDENTAL:
Both approach roadway/approach slab transitions are cracked the roadway width x up to 1/4in. wide and up to 3/4in. upheaved in shoulder areas - NO CHANGE.

The west approach roadway has a 30ft. long x 1/4in wide crack in the left shoulder extending from the west approach slab transition - NEW.

MISCELLANEOUS : Other Elements

Str Unit	Elem/Env	Description	Qty1	%1	Qty2	%2	Qty3	%3	Qty4	%4	T Qty
Structure Unit 1	8475 / 3	R/Conc Walls	120	100	0	.	0	.	0	.	120 ft

Element Inspection Notes:

8475/3 No Notes

MISCELLANEOUS : Other Elements

Str Unit	Elem/Env	Description	Qty1	%1	Qty2	%2	Qty3	%3	Qty4	%4	T Qty
Structure Unit 1	8478 / 3	MSE Walls	440	100	0	.	0	.	0	.	440 ft

Element Inspection Notes:

8478/3 Note: This element represents MSE walls at both abutments and 30ft. at the four corners of the structure.

INCIDENTAL:
Abutment 2 MSE wall has an area of minor backfill leakage at the groundline of the 6th vertical panel from the north end - NO CHANGE. Refer to photo 2.

SUBSTRUCTURE : Substructure

Str Unit	Elem/Env	Description	Qty1	%1	Qty2	%2	Qty3	%3	Qty4	%4	T Qty
Structure Unit 1	215 / 3	Re Conc Abutment	320	100	0	.	0	.	0	.	320 ft

Element Inspection Notes:

215/3 Note: There are non-structural cosmetic arches partially supported by columns attached to the outside face of the abutments at all four corners of the structure. The arches and their supports are considered incidental to this element.

INCIDENTAL:
There are intermittent voids in the sealant at the base of the Abutment 1 and 2 caps - NO CHANGE.

SUPERSTRUCTURE : Bearings

Str Unit	Elem/Env	Description	Qty1	%1	Qty2	%2	Qty3	%3	Qty4	%4	T Qty
Structure Unit 1	310 / 3	Elastomeric Bearing	17	65.38	9	34.62	0	.	0	.	26 each
Structure Unit 1	1020 / 3	Connection	0	.	9	100	0	.	0	.	9 each

This report contains information relating to the physical security of a structure and depictions of the structure. This information is confidential and exempt from public inspection pursuant to sections 119.071(3)(a) and 119.071(3)(b), Florida Statutes. Only the cover page of this report may be inspected and copied.

FLORIDA DEPARTMENT OF TRANSPORTATION
BRIDGE MANAGEMENT SYSTEM
Inspection/CIDR Report
Inspection

Structure ID: 750743

DISTRICT: D5 - Deland **INSPECTION DATE: 6/13/2019 LEVU**

Element Inspection Notes:

310/3 CS2 1020 = Nine of the lock and anchor nuts of the bearing assemblies are loose - NO CHANGE. (9EA)

1020/3 Refer to Parent Element

SUPERSTRUCTURE : Superstructure

Str Unit	Elem/Env	Description	Qty1	%1	Qty2	%2	Qty3	%3	Qty4	%4	T Qty
Structure Unit 1	107 / 3	Steel Opn Girder/Beam	2501	100	0	.	0	.	0	.	2501 ft
Structure Unit 1	8516 / 3	Painted Steel	33266	100	0	.	0	.	0	.	33266 sq.ft

Element Inspection Notes:

107/3 No Notes

8516/3 No Notes

SUPERSTRUCTURE : Superstructure

Str Unit	Elem/Env	Description	Qty1	%1	Qty2	%2	Qty3	%3	Qty4	%4	T Qty
Structure Unit 1	331 / 3	Re Conc Bridge Railing	143	74.09	50	25.91	0	.	0	.	193 ft
Structure Unit 1	1120 / 3	Efflorescence/Rust Staining	0	.	50	100	0	.	0	.	50 ft

Element Inspection Notes:

331/3 Note: This element represents the median barrier along the centerline of the structure.

CS2 1120 = The median barrier has 50 vertical cracks up to full height x 1/64in. wide with efflorescence - NO CHANGE. (50FT)

1120/3 Refer to Parent Element

SUPERSTRUCTURE : Superstructure

Str Unit	Elem/Env	Description	Qty1	%1	Qty2	%2	Qty3	%3	Qty4	%4	T Qty
Structure Unit 1	333 / 3	Other Bridge Railing	266	69.09	119	30.91	0	.	0	.	385 ft
Structure Unit 1	1120 / 3	Efflorescence/Rust Staining	0	.	119	100	0	.	0	.	119 ft

Element Inspection Notes:

333/3 Note: This element represents the Jersey type barriers with aluminum rail attached to the top.

CS2 1120 = The left and right Jersey type barriers have 41 vertical cracks with efflorescence up to full height x 1/64in. wide - NO CHANGE. (41FT)

CS2 1120 = The left and right Jersey type barriers have 75 vertical cracks between 12in. high to 20in. high x 1/64in. wide with efflorescence in isolated areas throughout - NO CHANGE. (75FT)

CS2 1120 = The right Jersey type barrier has a 30in. long x 1/64in. wide horizontal crack with efflorescence, 7ft. east of Abutment 2 over the electrical cover box - NO CHANGE. (3FT)

This report contains information relating to the physical security of a structure and depictions of the structure. This information is confidential and exempt from public inspection pursuant to sections 119.071(3)(a) and 119.071(3)(b), Florida Statutes. Only the cover page of this report may be inspected and copied.

FLORIDA DEPARTMENT OF TRANSPORTATION
BRIDGE MANAGEMENT SYSTEM
Inspection/CIDR Report
Inspection

Structure ID: 750743

DISTRICT: D5 - Deland **INSPECTION DATE: 6/13/2019 LEVU**

INCIDENTAL:
The left Jersey type barrier has a 10ft. long x full height tire marks at mid-span - NO CHANGE.

1120/3 Refer to Parent Element

Total Number of Elements*: 10
*excluding defects/protective systems

This report contains information relating to the physical security of a structure and depictions of the structure. This information is confidential and exempt from public inspection pursuant to sections 119.071(3)(a) and 119.071(3)(b), Florida Statutes. Only the cover page of this report may be inspected and copied.

FLORIDA DEPARTMENT OF TRANSPORTATION
BRIDGE MANAGEMENT SYSTEM
Inspection/CIDR Report
Inspection

Structure ID: 750743

DISTRICT: D5 - Deland **INSPECTION DATE: 6/13/2019 LEVU**

Inspector Recommendations

UNIT: Structure Unit 1 **DECKS**

ELEMENT/ENV: 301 / 3 Pourable Joint Seal **ELEM CATEGORY: Joints**

CONDITION STATE			PRIORITY
1 , 3	MMS Quantity: 8 lf	Element Estimated Quantity: 290 ft	3

WORK ORDER RECOMMENDATION:

Repair adhesion loss at Abutment 1 and 2 joints. 8FT

Structure Notes

Bridge 750743 entered 6/5/2009 07:10:15 by userid MT538DS-P

BRIDGE OWNER - CENTRAL FLORIDA EXPRESSWAY

TRAFFIC RESTRICTIONS: Upon review, the findings of this inspection do not indicate any deterioration, geometric changes or additional dead load that would warrant a new load rating analysis; therefore, the current load rating analysis dated 5/11/09 still governs. The structure is not posted.

Bridge Number 750707 is west and Bridge Number 770074 is east of this Bridge Number 750743.

An Arch Mass Tuned Damper System has been installed at this structure. Refer to the Tuned Mass Damper Operating and Maintenance Manual available in EDMS for inspection and maintenance requirements. 12/2012

This structure is within Section Number 75 340 000 which is inventoried from east to west.

INSPECTION NOTES: LEVU 6/13/2019

Bucket truck was utilized for this inspection.

LOAD CAPACITY EVALUATION
Since the current load rating dated 5/11/09, there is no indication that deterioration, geometric changes or additional dead load have occurred that would warrant a new load rating analysis. This only applies to this inspection dated 6/13/19 per Thomas LoCicero, P.E.

Sufficiency Rating Calculation Accepted by KN538PL at 7/26/2019 3:55:38 PM

This report contains information relating to the physical security of a structure and depictions of the structure. This information is confidential and exempt from public inspection pursuant to sections 119.071(3)(a) and 119.071(3)(b), Florida Statutes. Only the cover page of this report may be inspected and copied.

FLORIDA DEPARTMENT OF TRANSPORTATION
BRIDGE MANAGEMENT SYSTEM
Inspection/CIDR Report
Inspection

Structure ID: 750743

DISTRICT: D5 - Deland **INSPECTION DATE: 6/13/2019 LEVU**

North Elevation

This report contains information relating to the physical security of a structure and depictions of the structure. This information is confidential and exempt from public inspection pursuant to sections 119.071(3)(a) and 119.071(3)(b), Florida Statutes. Only the cover page of this report may be inspected and copied.

FLORIDA DEPARTMENT OF TRANSPORTATION
BRIDGE MANAGEMENT SYSTEM
Inspection/CIDR Report
Inspection

Structure ID: 750743

DISTRICT: D5 - Deland **INSPECTION DATE: 6/13/2019 LEVU**

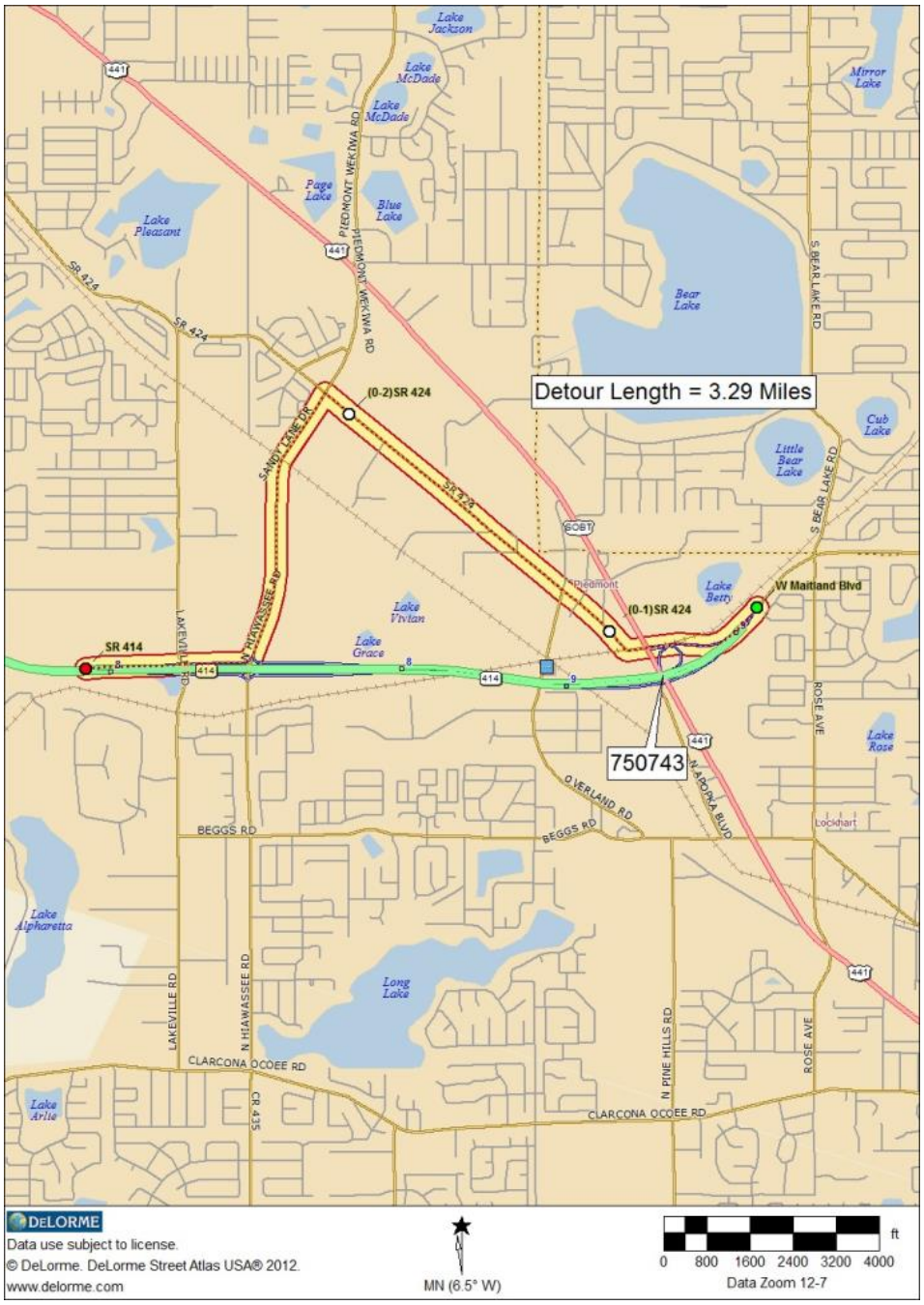

SR-414 over US-441

This report contains information relating to the physical security of a structure and depictions of the structure. This information is confidential and exempt from public inspection pursuant to sections 119.071(3)(a) and 119.071(3)(b), Florida Statutes. Only the cover page of this report may be inspected and copied.

FLORIDA DEPARTMENT OF TRANSPORTATION
BRIDGE MANAGEMENT SYSTEM
Inspection/CIDR Report
Inspection

Structure ID: 750743
DISTRICT: D5 - Deland

INSPECTION DATE: 6/13/2019 LEVU

[redacted] DM [redacted] 8/0[redacted]

Form Revision: 27-Jun-07, D5mod 12-Nov-08

BRIDGE LOAD RATING SUMMARY FORM

BRIDGE DATA

Bridge Number:	**750743**
Struct. Type Main [Item 43] @:	3 02
Struct. Type Appr. [Item 44] @:	0 00

POSTING DATA

Current Restrictions

Item 41 @:	New - Not yet Open
Is Posting Needed:	No
Proposed Restrictions	
Item 70 @:	At/Above Legal Loads

PROGRAM USED

Merlin DASH Version 9.0

BASIS FOR ANALYSIS

Design Drawings:	
As-Built Drawings:	Yes
Shop Drawings:	
Field Measurements:	Yes
Coupon Testing:	
Other:	

LIVE LOAD DISTRIBUTION

AASHTO LFD:	
AASHTO LRFD:	1.0010
SALOD:	
BRUFEM:	
Finite Element on Grillage:	

LONGITUDINAL GOVERNING COMPONENT

Main/Approach Span:	Main
Description:	Multi-Beam
Material:	Steel
Simple/Continuous Span:	Simple
Span Length:	189.10
Flexure, Shear or Principal Tension:	Shear

TRANSVERSE GOVERNING COMPONENT

Main/Approach Span:	
Description:	
Material:	
Deck, Box or Substructure:	
Flexure, Shear or Principal Tension:	

OTHER SPAN OF INTEREST
(If Applicable)

OTHER SPAN OF INTEREST
(If Applicable)

PONTIS DATABASE INPUT

PONTIS APPRAISAL TAB

Description (NBIS Code)	Value	
Design Load (31) @	HL93	
HL93, M9 (H10), M13.5 (H15), M13.5 (HS15), M18 (H20), MS18 (HS20), MS18 (HS20)+Mod, Pedestrian, Railroad, MS22.5 (HS25), Unknown (NBI), Unknown (P), Not Applicable (P)		
Operating Type (63) @	Load & Resistance Factor	
Unknown, Load Factor, Allowable Stress, Load & Resistance Factor, Load Test, No Rating, Unknown (NBI), Not Applicable (P)		
Operating Rating (64)* @ ( )	52.2	Tons
Inventory Type (65) @	Load & Resistance Factor	
Unknown, Load Factor, Allowable Stress, Load & Resistance Factor, Load Test, No Rating, Unknown (NBI), Not Applicable (P)		
Inventory Rating (66)* @ ( )	40.3	Tons

PONTIS LOADRATING TAB

Description (NBIS Code)	Value	
HS 20/HL 93 Governing Span Length	189.10	FT
Load Rating Origination	As-Built Plans	
Unknown, Design Plans, As-Built Plans, Field Measurements		
Load Rating Date	6/28/2006	
Method Calculation	AASHTO Formula	
Unknown, AASHTO Formula, SALOD, BRUFEM, Other		
Load Distribution Factor	1.0010	
Impact Factor	33.00	
Design Method	LRFD	
Unknown, Working Stress, Load Factor, LRFD, Others		
Design Measure	English	
Unknown, English, Systeme International		

PONTIS LOAD RATING TAB

Description (NBIS Code)	Value	
FL 120 Longitudinal Governing Span Rating	82.2	Tons
SEGMENTAL		
FL 120 Transverse Rating (Segmental)**	-1.0	Tons
Single Axle Transverse Rating**	-1.0	Tons
Tandem Axle Transverse Rating**	-1.0	Tons
Wing Span**	-1.00	FT
Web-to-Web Span**	-1.00	FT
MAXIMUM SPAN		
HS 20 Operating Rating Maximum Span**	-1.0	Tons
FL 120 Longitudinal Maximum Span #	82.2	Tons
FLOOR BEAM		
Floor Beam Present	No = Stop Yes = Continue	
Governing Floor Beam Span**	-1.00	FT
Governing Floor Beam Spacing**	-1.00	FT
Floor Beam HS 20 Rating**	-1.0	Tons
Floor Beam SU 4 Rating**	-1.0	Tons
Floor Beam Inventory Rating Factor** #	-1.0000	
Floor Beam Operating Rating Factor **#	-1.0000	
Floor Beam FL 120 Rating #	NA	Tons

TRUCK OPERATING RATINGS

SU 2**	Enter Contr. Mem.	( )	-1.0	Tons
SU 3**	Enter Contr. Mem.	( )	-1.0	Tons
SU 4**	Enter Contr. Mem.	( )	-1.0	Tons
C 3**	Enter Contr. Mem.	( )	-1.0	Tons
C 4**	Enter Contr. Mem.	( )	-1.0	Tons
C 5**	Enter Contr. Mem.	( )	-1.0	Tons
ST 5**	Enter Contr. Mem.	( )	-1.0	Tons
Recommended SU Posting ##			99	Tons
Recommended C Posting ##			99	Tons
Recommended ST Posting ##			99	Tons

LEGEND

* If rating is provided as a factor from an LRFR analysis, multiply the rating factor by 36 tons
** If not calculated, enter "-1"
# LRFR Rating Only
If Posting is not required, enter "99"
@ BMS Coding Manual available on the FDOT Office of Maintenance website
( ) List Controlling Member & (M=moment, V=shear, pt=post-tensioning) for this Rating

COMMENTS BY ENGINEER

SR 414 Over S.R. 500 (U.S. 441), Bridge 750743, Proj. OOCEA 414-21, New Bridge. Single Span Bridge over SR 500 (US 441). Design: LRFD. Rating: LRFR. Rating controlled by Strength I Shear at Span 1, Beam #2. FL 120 Permit Rating is controlled by Strength II Shear at Span 1, Beam #2.

COMPUTATIONS

Performed By:	H. G. Lyons, P.E.	Date:	6/28/2006
Checked By:	T. E. Davidson, P.E.	Date:	6/28/2006
Reviewed By:	S. D. Marple, E.I.	Date:	5/8/2009

Responsible Engineer: T. E. Davidson, P.E.
FL P.E. #: 47131
Date: 5/8/2009
Address: PARSONS
2420 Lakemont Avenue
Suite 450
Orlando, FL 32814

RECEIVED MAY 12 2009 D5 KEPLER

THOMAS EDWARD DAVIDSON STATE OF FLORIDA PROFESSIONAL ENGINEER 5/8/09

LOAD RATING ANALYSIS SUMMARY

This report contains information relating to the physical security of a structure and depictions of the structure. This information is confidential and exempt from public inspection pursuant to sections 119.071(3)(a) and 119.071(3)(b), Florida Statutes. Only the cover page of this report may be inspected and copied.

FLORIDA DEPARTMENT OF TRANSPORTATION
BRIDGE MANAGEMENT SYSTEM
Inspection/CIDR Report
Inspection

Structure ID: 750743

DISTRICT: D5 - Deland **INSPECTION DATE: 6/13/2019 LEVU**

Photo 1 - Element 301 Pourable Joint Seal

Adhesion loss Abutment 1 joint Lane 7

WORK ORDER RECOMMENDATION:
Repair adhesion loss at Abutment 1 and 2 joints. 8FT

This report contains information relating to the physical security of a structure and depictions of the structure. This information is confidential and exempt from public inspection pursuant to sections 119.071(3)(a) and 119.071(3)(b), Florida Statutes. Only the cover page of this report may be inspected and copied.

FLORIDA DEPARTMENT OF TRANSPORTATION
BRIDGE MANAGEMENT SYSTEM
Inspection/CIDR Report
Inspection

Structure ID: 750743

DISTRICT: D5 - Deland **INSPECTION DATE: 6/13/2019 LEVU**

Photo 2 - Element 8478 MSE Wall

Backfill leakage at Abutment 2 MSE wall, 6th panel from the north end

WORK ORDER RECOMMENDATION:
None

This report contains information relating to the physical security of a structure and depictions of the structure. This information is confidential and exempt from public inspection pursuant to sections 119.071(3)(a) and 119.071(3)(b), Florida Statutes. Only the cover page of this report may be inspected and copied.

FLORIDA DEPARTMENT OF TRANSPORTATION
BRIDGE MANAGEMENT SYSTEM

REPORT ID: INSP005

Inspection/CIDR Report

Structure ID: 750743

CIDR

DATE PRINTED: 7/31/2019

Description

Structure Unit Identification

Bridge/Unit Key: 750743 1
Structure Name: SR-414 over US-441
Description: Main Span 1
Type: M - Main

Roadway Identification

NBI Structure No (8): 750743
Position/Prefix (5): 1 - Route On Structure
Kind Hwy (Rte Prefix): 8 Other (incl toll rds)
Design Level of Service: 1 Mainline
Route Number/Suffix: 00414 / 0 N/A (NBI)
Feature Intersect (6): US-441
Critical Facility: Not Defense-crit
Facility Carried (7): SR-414
Mile Point (11): 0.224
Latitude (16): 028d38'02.0" Long (17): 081d27'08.7"

Roadway Traffic and Accidents

Lanes (28): 5 Medians: 1 Speed: 55 mph
ADT Class: 4 ADT Class 4
Recent ADT (29): 39500 Year (30): 2018
Future ADT (114): 68533 Year (115): 2040
Truck % ADT (109): 5
Detour Length (19): 3.3 mi
Detour Speed: 65 mph
Accident Count: -1 Rate:

Roadway Classification

Nat. Hwy Sys (104): 1 On the NHS
National base Net (12): 1 - On Base Network
LRS Inventory Rte (13a): 75 340 000 Sub Rte (13b):
Functional Class (26): 12 Urban Fwy/Expwy
On Federal Aid System: Yes
Defense Hwy (100): 0 Not a STRAHNET hwy
Direction of Traffic (102): 2 2-way traffic
Emergency: [X]

Roadway Clearances

Vertical (10): 99.99 ft Appr. Road (32): 133.7 ft
Horiz. (47): 73.7 ft Roadway (51): 133.7 ft
Truck Network (110): 0 Not part of natl netwo
Toll Facility (20): 2 On toll road
Fed. Lands Hwy (105): 0 N/A (NBI)
School Bus Route: [X]
Transit Route: [X]

NBI Project Data

Proposed Work (075A): Unknown (P)
Work To Be Done By (075B): Unknown (NBI)
Improvement Length (076): -1 ft

Improvement Cost (094): -$ 1.00
Roadway Improvement Cost (095): -$ 1.00
Total Cost (096): -$ 1.00
Year of Estimate (097): -1

NBI Rating

Channel (61): N N/A (NBI)
Deck (58): 8 Very Good
Superstructure (59): 8 Very Good
Substructure (60): 8 Very Good

Culvert (62): N N/A (NBI)
Waterway (71): N Not applicable
Unrepaired Spalls: -1 sq.ft.
Review Required: [X]

This report contains information relating to the physical security of a structure and depictions of the structure. This information is confidential and exempt from public inspection pursuant to sections 119.071(3)(a) and 119.071(3)(b), Florida Statutes. Only the cover page of this report may be inspected and copied.

FLORIDA DEPARTMENT OF TRANSPORTATION
BRIDGE MANAGEMENT SYSTEM

REPORT ID: INSP005

Inspection/CIDR Report

Structure ID: 750743

CIDR

DATE PRINTED: 7/31/2019

Structure Identification

Admin Area: METROPLAN Orlando
District (2): D5 - Deland
County (3): (75)Orange
Place Code (4):
Location (9): SR-414 over US-441
Border Br St/Reg (98): Not Applicable (P) Share: %
Border Struct No (99): _
FIPS State/Region (1): 12 Florida Region 4-Atlanta
NBIS Bridge Len (112): Y - Meets NBI Length

Parallel Structure (101): No || bridge exists
Temp. Structure (103): Not Applicable (P)
Maint. Resp. (21): 31 State Toll Authority
Owner (22): 31 State Toll Authority
Historic Signif. (37): 5 Not eligible for NRHP

Geometrics

Spans in Main Unit (45): 1
Approach Spans (46): 0
Length of Max Span (48): 192.4 ft
Structure Length (49): 192.4 ft
Total Length: 252.4 ft
Deck Area: 26552 sqft
Structure Flared (35): 0 No flare

Age and Service

Year Built (27): 2009
Year Reconstructed (106): 0
Type of Service On (42a): 1 Highway
Under (42b): 1 Highway
Fracture Critical Details: Not Applicable

Structure Type and Material

Curb/Sidewalk (50): Left: 0 ft Right: 0 ft
Bridge Median (33): 3 Closed Med w/Barriers
Main Span Material (43A): 3 Steel
Appr Span Material (44A): Not Applicable (P)
Main Span Design (43B): 02 Stringer/Girder
Appr Span Design (44B): Not Applicable (P)

Deck Type and Material

Deck Width (52): 138 ft
Skew (34): 15 deg
Deck Type (107): 1 Concrete-Cast-in-Place
Surface (108): 0 None
Membrane: 0 None
Deck Protection: None

Appraisal

Structure Appraisal

Open/Posted/Closed (41): A Open, no restriction
Deck Geometry (68): 9 Above Desirable Crit
Underclearances (69): 7 Above Minimum
Approach Alignment (72): 8-No Speed Red thru Curv
Bridge Railings (36a): 1 Meets Standards
Transitions (36b): 1 Meets Standards

Approach Guardrail (36c): 1 Meets Standards
Approach Guardrail Ends (36d): 1 Meets Standards
Scour Critical (113): N Not Over Waterway

Navigation Data

Navigation Control (38): NA-no waterway
Nav Vertical Clr (39): 0 ft
Nav Horizontal Clr (40): 0 ft
Min Vert Lift Clr (116): 0 ft
Pier Protection (111): 1 Not Required

NBI Condition Rating

Sufficiency Rating: 90.2
Health Index: 99.79
Structural Eval (67): 8 Equal Desirable Crit
Deficiency: Not Deficient

Minimum Vertical Clearance

Over Structure (53): 99.99 ft
Under (reference) (54a): H Hwy beneath struct
Under (54b): 17 ft

Minimum Lateral Underclearance

Reference (55a): H Hwy beneath struct
Right Side (55b): 24 ft
Left Side (56): 0 ft

Schedule

Current Inspection

Inspection Date: 06/13/2019
Inspector: KNKCAMB - Brice McMinn
Bridge Group: 01127
Alt. Bridge Group:
Primary Type: Regular NBI
Review Required: X

Next Inspection Date Scheduled

NBI: 06/13/2021
Element: 06/13/2021
Fracture Critical:
Underwater:
Other/Special:

This report contains information relating to the physical security of a structure and depictions of the structure. This information is confidential and exempt from public inspection pursuant to sections 119.071(3)(a) and 119.071(3)(b), Florida Statutes. Only the cover page of this report may be inspected and copied.

FLORIDA DEPARTMENT OF TRANSPORTATION
BRIDGE MANAGEMENT SYSTEM

REPORT ID: INSP005

Inspection/CIDR Report

Structure ID: 750743

CIDR

DATE PRINTED: 7/31/2019

Schedule Cont.

Inspection Types Performed NBI [X] Element [X] Fracture Critical [ ] Underwater [ ] Other Special [ ]

Inspection Intervals	Required (92)	Frequency (92)		Last Date (93)	
Fracture Critical	[ ]	mos			
Underwater	[ ]	mos			
Other Special	[ ]	mos			
NBI		24 mos	(91)	06/13/2019	(90)

Inspection Resources

Crew Hours:	4
Flagger Hours:	0
Helper Hours:	0
Snooper Hours:	0
Special Crew Hours:	0
Special Equip Hours:	0

Bridge Related

General Bridge Information

Parallel Bridge Seq:
Channel Depth: -1 ft
Radio Frequency: -1
Phone Number:
Exception Date:
Exception Type:
Accepted By Maint:
Warranty Expiration: 00/00/0000
Performance Rating: Excellent

Bridge Rail 1: Concrete jersey type
Bridge Rail 2: Conc sidewalk barrier
Electrical Devices: Roadway lighting only
Culvert Type: Not applicable
Maintenance Yard: 594-Orlando
FIHS ON / OFF: No Routes on FIHS
Previous Structure:
2nd Previous Structure:
Replacement Structure:

Permitted Utilities: Power [ ] Water [ ] Gas [ ] Fiber Optic [ ] Sewage [ ] Other [X] 6in. fiberglass

Bridge Load Rating Information

Inventory Type (065): 3 LRFR Load & Res. Fact
Operating Type (063): 3 LRFR Load & Res. Fact
Original Design Load (031): HL 93
Date: 05/11/2009
Initials: TED
Load Rating Rev. Recom.: No
Load Rating Plans Status: Built

Inventory Rating (066): 40.3 tons
Operating Rating (064): 52.2 tons
FL120 Permit Rating: 82.2 tons
HS20/FL120 Max Span Rating: 82.2 tons
Dynamic Impact in Percent: 33 %
Governing Span Length: 189.0 ft
Minimum Span Length:
Distribution Method: AASHTO formula

Load Rating Notes:

LEGAL LOADS

SU2: -1.0 tons
SU3: -1.0 tons
SU4: -1.0 tons
C3: -1.0 tons
C4: -1.0 tons
C5: -1.0 tons
ST5: -1.0 tons
Posting (070): 5 At/Above Legal Loads
Open/Posted/Closed (041): A Open, no restriction

POSTING

Recom. SU Posting: 99 tons
Recom. C Posting: 99 tons
Recom. ST5 Posting: 99 tons
Actual SU Posting: 99 tons
Actual C Posting: 99 tons
Actual ST5 Posting: 99 tons
Actual Blanket Posting: 99 tons
Emergency Vehicle: 1 EV inapplicable

FLOOR BEAM (FB) FB Present: No

FB Span Length, Gov: 0.0 ft
FB Spacing, Gov: 0.0 ft
FB OPR Rating: 0.0 tons
FB SU4 OPR Rating: 0.0 tons
FB FL120 Rating: 0.0 tons

SEGMENTAL (SEG)

SEG Wing-Span: -1.0 ft
SEG Web-to-Web Span: -1.0 ft
SEG Transverse HL93 Operating: -1.00 RF

Bridge Scour and Storm Information

Pile Driving Record: All pile driving records
Foundation Type: Foundation details
Mode of Flow: Not Applicable
Rating Scour Eval: Not Applicable
Highest Scour Eval: Not Applicable
Scour Evaluation Method:

Scour Recommended I: Not Applicable
Scour Recommended II: Not Applicable
Scour Recommended III: Not Applicable
Scour Elevation:
Action Elevation:
Storm Frequency:

This report contains information relating to the physical security of a structure and depictions of the structure. This information is confidential and exempt from public inspection pursuant to sections 119.071(3)(a) and 119.071(3)(b), Florida Statutes. Only the cover page of this report may be inspected and copied.

FLORIDA DEPARTMENT OF TRANSPORTATION
BRIDGE MANAGEMENT SYSTEM

REPORT ID: INSP005

Inspection/CIDR Report

Structure ID: 750743

CIDR

DATE PRINTED: 7/31/2019

Elements

Inspection Date: 06/13/2019 LEVU

DECKS : Decks/Slabs

Str Unit	Elem/Env	Description	Qty1	%1	Qty2	%2	Qty3	%3	Qty4	%4	T Qty
Structure Unit 1	12 / 3	Re Concrete Deck	26552	100	0	.	0	.	0	.	26552 sq.ft

DECKS : Joints

Str Unit	Elem/Env	Description	Qty1	%1	Qty2	%2	Qty3	%3	Qty4	%4	T Qty
Structure Unit 1	301 / 3	Pourable Joint Seal	282	97.24	0	.	8	2.76	0	.	290 ft
Structure Unit 1	2320 / 3	Seal Adhesion	0	.	0	.	8	100	0	.	8 ft

MISCELLANEOUS : Other Elements

Str Unit	Elem/Env	Description	Qty1	%1	Qty2	%2	Qty3	%3	Qty4	%4	T Qty
Structure Unit 1	321 / 3	Re Conc Approach Slab	8280	100	0	.	0	.	0	.	8280 sq.ft
Structure Unit 1	510 / 3	Wearing Surfaces	7560	100	0	.	0	.	0	.	7560 sq.ft

MISCELLANEOUS : Other Elements

Str Unit	Elem/Env	Description	Qty1	%1	Qty2	%2	Qty3	%3	Qty4	%4	T Qty
Structure Unit 1	8475 / 3	R/Conc Walls	120	100	0	.	0	.	0	.	120 ft

MISCELLANEOUS : Other Elements

Str Unit	Elem/Env	Description	Qty1	%1	Qty2	%2	Qty3	%3	Qty4	%4	T Qty
Structure Unit 1	8478 / 3	MSE Walls	440	100	0	.	0	.	0	.	440 ft

SUBSTRUCTURE : Substructure

Str Unit	Elem/Env	Description	Qty1	%1	Qty2	%2	Qty3	%3	Qty4	%4	T Qty
Structure Unit 1	215 / 3	Re Conc Abutment	320	100	0	.	0	.	0	.	320 ft

SUPERSTRUCTURE : Bearings

Str Unit	Elem/Env	Description	Qty1	%1	Qty2	%2	Qty3	%3	Qty4	%4	T Qty
Structure Unit 1	310 / 3	Elastomeric Bearing	17	65.38	9	34.62	0	.	0	.	26 each
Structure Unit 1	1020 / 3	Connection	0	.	9	100	0	.	0	.	9 each

SUPERSTRUCTURE : Superstructure

Str Unit	Elem/Env	Description	Qty1	%1	Qty2	%2	Qty3	%3	Qty4	%4	T Qty
Structure Unit 1	107 / 3	Steel Opn Girder/Beam	2501	100	0	.	0	.	0	.	2501 ft
Structure Unit 1	8516 / 3	Painted Steel	33266	100	0	.	0	.	0	.	33266 sq.ft

SUPERSTRUCTURE : Superstructure

Str Unit	Elem/Env	Description	Qty1	%1	Qty2	%2	Qty3	%3	Qty4	%4	T Qty
Structure Unit 1	331 / 3	Re Conc Bridge Railing	143	74.09	50	25.91	0	.	0	.	193 ft
Structure Unit 1	1120 / 3	Efflorescence/Rust Staining	0	.	50	100	0	.	0	.	50 ft

This report contains information relating to the physical security of a structure and depictions of the structure. This information is confidential and exempt from public inspection pursuant to sections 119.071(3)(a) and 119.071(3)(b), Florida Statutes. Only the cover page of this report may be inspected and copied.

FLORIDA DEPARTMENT OF TRANSPORTATION
BRIDGE MANAGEMENT SYSTEM

REPORT ID: INSP005

Inspection/CIDR Report

Structure ID: 750743

CIDR

DATE PRINTED: 7/31/2019

SUPERSTRUCTURE : Superstructure

Str Unit	Elem/Env	Description	Qty1	%1	Qty2	%2	Qty3	%3	Qty4	%4	T Qty
Structure Unit 1	333 / 3	Other Bridge Railing	266	69.09	119	30.91	0	.	0	.	385 ft
Structure Unit 1	1120 / 3	Efflorescence/Rust Staining	0	.	119	100	0	.	0	.	119 ft

Total Number of Elements*: 10
*excluding defects/protective systems

Inspection Information

Inspection Date: 06/13/2019 **Type:** Regular NBI

Inspector: KNKCAMB - Brice McMinn

Inspection Notes: Bucket truck was utilized for this inspection.

LOAD CAPACITY EVALUATION
Since the current load rating dated 5/11/09, there is no indication that deterioration, geometric changes or additional dead load have occurred that would warrant a new load rating analysis. This only applies to this inspection dated 6/13/19 per Thomas LoCicero, P.E.

Sufficiency Rating Calculation Accepted by KN538PL at 7/26/2019 3:55:38 PM

Structure Notes

Bridge 750743 entered 6/5/2009 07:10:15 by userid MT538DS-P

BRIDGE OWNER - CENTRAL FLORIDA EXPRESSWAY

TRAFFIC RESTRICTIONS: Upon review, the findings of this inspection do not indicate any deterioration, geometric changes or additional dead load that would warrant a new load rating analysis; therefore, the current load rating analysis dated 5/11/09 still governs. The structure is not posted.

Bridge Number 750707 is west and Bridge Number 770074 is east of this Bridge Number 750743.

An Arch Mass Tuned Damper System has been installed at this structure. Refer to the Tuned Mass Damper Operating and Maintenance Manual available in EDMS for inspection and maintenance requirements. 12/2012

This structure is within Section Number 75 340 000 which is inventoried from east to west.

Schedule Notes

This report contains information relating to the physical security of a structure and depictions of the structure. This information is confidential and exempt from public inspection pursuant to sections 119.071(3)(a) and 119.071(3)(b), Florida Statutes. Only the cover page of this report may be inspected and copied.

FLORIDA DEPARTMENT OF TRANSPORTATION
BRIDGE MANAGEMENT SYSTEM

REPORT ID: INSP005

Inspection/CIDR Report

Structure ID: 750743

CIDR

DATE PRINTED: 7/31/2019

Under Route Information

Roadway Identification

NBI Structure No (8): 750743
Position/Prefix (5): 2 - One Route Under
Kind Hwy (Rte Prefix): 2 U.S. Numbered Hwy
Design Level of Service: 1 Mainline
Route Number/Suffix: 00500 / 0 N/A (NBI)
District (2): D5 - Deland
County (3): (75)Orange
Place Code (4):
Feature Intersect (6): US-441
Facility Carried by Structure (7): SR-414
Critical Facility: * Defense-critical
Roadway Name: US-441
Mile Point (11): 6.755
Latitude (16): 028d38'02.0" Long (17): 081d27'08.7"

Roadway Traffic and Accidents

Lanes (28): 7 Medians: 1 Speed: 50 mph
ADT Class: 4 ADT Class 4
Recent ADT (29): 28000 Year (30): 2018
Future ADT (114): 48580 Year (115): 2040
Truck % ADT (109): 8
Detour Length (19): 0 mi
Detour Speed: 50 mph
Accident Count: -1 Rate:

Roadway Classification

Nat. Hwy Sys (104): 1 On the NHS
National base Net (12): 1 - On Base Network
LRS Inventory Rte (13a): 75 020 000 Sub Rte (13b): 00
Functional Class (26): 14 Urban Other Princ
On Federal Aid System: Yes
Defense Hwy (100): 2 non-intersta STRAHNET
Direction of Traffic (102): 2 2-way traffic
Emergency: [X]

Roadway Clearances

Vertical (10): 17.1 ft Appr. Road (32): 64 ft
Horiz. (47): 99.9 ft Roadway (51): 139 ft
Truck Network (110): 0 Not part of natl netwo
Toll Facility (20): 3 On free road
Fed. Lands Hwy (105): 0 N/A (NBI)
School Bus Route: [ ]
Transit Route: [ ]

This report contains information relating to the physical security of a structure and depictions of the structure. This information is confidential and exempt from public inspection pursuant to sections 119.071(3)(a) and 119.071(3)(b), Florida Statutes. Only the cover page of this report may be inspected and copied.

Form Revision: 27-Jun-07, D5mod 12-Nov-08

BRIDGE LOAD RATING SUMMARY FORM

BRIDGE DATA

Bridge Number:	750743
Struct. Type Main [Item 43] @:	3 02
Struct. Type Appr. [Item 44] @:	0 00

POSTING DATA

Current Restrictions

Item 41 @:	New - Not yet Open
Is Posting Needed:	No

Proposed Restrictions

Item 70 @:	At/Above Legal Loads

PROGRAM USED

Merlin DASH Version 9.0

BASIS FOR ANALYSIS

Design Drawings:	
As-Built Drawings:	Yes
Shop Drawings:	
Field Measurements:	Yes
Coupon Testing:	
Other:	

LIVE LOAD DISTRIBUTION

AASHTO LFD:	
AASHTO LRFD:	1.0010
SALOD:	
BRUFEM:	
Finite Element on Grillage:	

LONGITUDINAL GOVERNING COMPONENT

Main/Approach Span:	Main
Description:	Multi-Beam
Material:	Steel
Simple/Continuous Span:	Simple
Span Length:	189.10
Flexure, Shear or Principal Tension:	Shear

OTHER SPAN OF INTEREST

(If Applicable)

TRANSVERSE GOVERNING COMPONENT

Main/Approach Span:	
Description:	
Material:	
Deck, Box or Substructure:	
Flexure, Shear or Principal Tension:	

OTHER SPAN OF INTEREST

(If Applicable)

PONTIS DATABASE INPUT

PONTIS APPRAISAL TAB

Description (NBIS Code)	Value	
Design Load (31) @	HL93	
HL93, M9 (H10), M13.5 (H15), M13.5 (HS15), M18 (H20), MS18 (HS20), MS18 (HS20)+Mod. Pedestrian, Railroad, MS22.5 (HS25), Unknown (NBI), Unknown (P), Not Applicable (P)		
Operating Type (63) @	Load & Resistance Factor	
Unknown, Load Factor, Allowable Stress, Load & Resistance Factor, Load Test, No Rating, Unknown (NBI), Not Applicable (P)		
Operating Rating (64)* @ ( )	52.2	Tons
Inventory Type (65) @	Load & Resistance Factor	
Unknown, Load Factor, Allowable Stress, Load & Resistance Factor, Load Test, No Rating, Unknown (NBI), Not Applicable (P)		
Inventory Rating (66)* @ ( )	40.3	Tons

LEGEND

* If rating is provided as a factor from an LRFR analysis, multiply the rating factor by 36 tons

** If not calculated, enter "-1"

\# LRFR Rating Only

If Posting is not required, enter "99"

@ BMS Coding Manual available on the FDOT Office of Maintenance website

( ) List Controlling Member & (M=moment, V=shear, pt=post-tensioning) for this Rating

PONTIS LOAD RATING 1 TAB

Description (NBIS Code)	Value	
HS 20/HL 93 Governing Span Length	189.10	FT
Load Rating Origination	As-Built Plans	
Unknown, Design Plans, As-Built Plans, Field Measurements		
Load Rating Date	6/28/2006	
Method Calculation	AASHTO Formula	
Unknown, AASHTO Formula, SALOD, BRUFEM, Other		
Load Distribution Factor	1.0010	
Impact Factor	33.00	
Design Method	LRFD	
Unknown, Working Stress, Load Factor, LRFD, Others		
Design Measure	English	
Unknown, English, Systeme International		

TRUCK OPERATING RATINGS

SU 2**	Enter Contr. Mem. ( )	-1.0	Tons
SU 3**	Enter Contr. Mem. ( )	-1.0	Tons
SU 4**	Enter Contr. Mem. ( )	-1.0	Tons
C 3**	Enter Contr. Mem. ( )	-1.0	Tons
C 4**	Enter Contr. Mem. ( )	-1.0	Tons
C 5**	Enter Contr. Mem. ( )	-1.0	Tons
ST 5**	Enter Contr. Mem. ( )	-1.0	Tons
Recommended SU Posting ##		99	Tons
Recommended C Posting ##		99	Tons
Recommended ST Posting ##		99	Tons

PONTIS LOAD RATING 2 TAB

Description (NBIS Code)	Value	
FL 120 Longitudinal Governing Span Rating	82.2	Tons
SEGMENTAL		
FL 120 Transverse Rating (Segmental)**	-1.0	Tons
Single Axle Transverse Rating**	-1.0	Tons
Tandem Axle Transverse Rating**	-1.0	Tons
Wing Span**	-1.00	FT
Web-to-Web Span**	-1.00	FT
MAXIMUM SPAN		
HS 20 Operating Rating Maximum Span**	-1.0	Tons
FL 120 Longitudinal Maximum Span #	82.2	Tons
FLOOR BEAM		
Floor Beam Present	No = Stop Yes = Continue	
Governing Floor Beam Span**	-1.00	FT
Governing Floor Beam Spacing**	-1.00	FT
Floor Beam HS 20 Rating**	-1.0	Tons
Floor Beam SU 4 Rating**	-1.0	Tons
Floor Beam Inventory Rating Factor** #	-1.0000	
Floor Beam Operating Rating Factor **#	-1.0000	
Floor Beam FL 120 Rating #	NA	Tons

COMMENTS BY ENGINEER

SR 414 Over S.R. 500 (U.S. 441), Bridge 750743, Proj. OOCEA 414-211, New Bridge.
Single Span Bridge over SR 500 (US 441). Design: LRFD. Rating: LRFR. Rating controlled by Strength 1 Shear at Span 1, Beam #2. FL 120 Permit Rating is controlled by Strength II Shear at Span 1, Beam #2.

COMPUTATIONS

Performed By:	H. G. Lyons, P.E.	Date:	6/28/2006
Checked By:	T. E. Davidson, P.E.	Date:	6/28/2006
Reviewed By:	S. D. Marple, E.I.	Date:	5/8/2009

Responsible Engineer: T. E. Davidson, P.E.
FL P.E. #: 47131
Date: 5/8/2009
Address: PARSONS
2420 Lakemont Avenue
Suite 450
Orlando, FL 32814

RECEIVED
MAY 12 2009
D5 KEPLER

5/11/09

Load Rating Summary for Steel Girder Bridges

Table 1 – LRFR using Appendix D.6 (LFD or ASD)

Level	Vehicle	Weight (tons)	Load Factors LL	Load Factors DL	Minimum Rating Factor	Moment (Strength) or Stress (Service) Distribution Factor (DF)	Rating Factor	Tons	Location	Dimension	Shear (Strength) Distribution Factor (DF)	Rating Factor	Tons	Location	Dimension	Comments: Interior/exterior beam DF method if other than Standard Spec. Other appropriate comments
Inventory (Inv)	HS-20	36.0	2.17	1.30	N/A	N/A	N/A	N/A	N/A	N/A	N/A	N/A	N/A	N/A	N/A	
Operating (Op)	HS-20	36.0	1.30	1.30	N/A	N/A	N/A	N/A	N/A	N/A	N/A	N/A	N/A	N/A	N/A	
	SU4	35.0	1.30	1.30	N/A	N/A	N/A	N/A	N/A	N/A	N/A	N/A	N/A	N/A	N/A	
	C5	36.6	1.30	1.30	N/A	N/A	N/A	N/A	N/A	N/A	N/A	N/A	N/A	N/A	N/A	
	ST5	40.0	1.30	1.30	N/A	N/A	N/A	N/A	N/A	N/A	N/A	N/A	N/A	N/A	N/A	

Load Rating Summary for Steel Girder Bridges

Table 2 – LRFR w/o Appendix D.6 (LFD)

Level	Limit State	Vehicle	Weight (tons)	Load Factors LL	Load Factors DC	Load Factors DW	Minimum Rating Factor	Moment (Strength) or Stress (Service) Distribution Factor (DF)	Rating Factor	Tons	Location	Dimension	Shear (Strength) Distribution Factor (DF)	Rating Factor	Tons	Location	Dimension	Comments: Interior/exterior beam DF method if other than LRFD. Other appropriate comments
Design Load Rating	Strength I (Inv)	HL-93	N/A	1.75	1.25	1.50	1.00	0.942	1.25	N/A	B	X = 94.55'	1.001	1.12	N/A	A	W = 28.36'	
	Strength I (Op)	HL-93	N/A	1.35	1.25	1.50	1.00	0.942	1.62	N/A	B	X = 94.55'	1.001	1.45	N/A	A	W = 28.36'	Exterior Beam controls for Moment, Interior Beam controls for Shear *
	Sevice II (Inv)	HL-93	N/A	1.30	1.00	1.00	1.00	0.942	1.19	N/A	B	X = 94.55'	N/A	N/A	N/A	N/A	N/A	
	Service II (Op)	HL-93	N/A	1.00	1.00	1.00	1.00	0.942	1.55	N/A	B	X = 94.55'	N/A	N/A	N/A	N/A	N/A	
Legal Load Rating	Strength I	SU4	35.0	1.35	1.25	1.50	N/A	N/A	N/A	N/A	N/A	N/A	N/A	N/A	N/A	N/A	N/A	
	Strength I	C5	36.6	1.35	1.25	1.50	N/A	N/A	N/A	N/A	N/A	N/A	N/A	N/A	N/A	N/A	N/A	
	Strength I	ST5	40.0	1.35	1.25	1.50	N/A	N/A	N/A	N/A	N/A	N/A	N/A	N/A	N/A	N/A	N/A	Note: Legal Load Not Required
	Service II	SU4	35.0	1.30	1.00	1.00	N/A	N/A	N/A	N/A	N/A	N/A	N/A	N/A	N/A	N/A	N/A	
	Service II	C5	36.6	1.30	1.00	1.00	N/A	N/A	N/A	N/A	N/A	N/A	N/A	N/A	N/A	N/A	N/A	
	Service II	ST5	40.0	1.30	1.00	1.00	N/A	N/A	N/A	N/A	N/A	N/A	N/A	N/A	N/A	N/A	N/A	
Permit Load Rating	Strength II	FL120	60.0	1.35	1.25	1.50	1.00	0.942	1.64	98.4	B	X = 94.55'	1.001	1.37	82.2	A	W = 28.36'	
	Service II	FL120	60.0	0.90	1.00	1.00	1.00	0.942	1.57	94.2	B	X = 94.55'	N/A	N/A	N/A	N/A	N/A	

General Notes:
1. This table is based on the requirements established in the Jan/July 2006 "Structures Manual".

Table 2 Notes:
1. Permit capacity is determined by using the permit vehicle in all lanes.
2. If the Design Operating Load Rating is greater than 1, Load Rating using Legal Vehicles SU4, C5, and ST5 is not required.

Notes to Designer:
1. Modify the Rating Location sketch to resemble the bridge being rated.
2. Fill in the date in General Note number 1 above.
3. For Girder, Floorbeam, Stringer Bridges, use one Summary sheet for each member type."
4. Design Service Limit State ratings are only required for compact members.
5. See Volume 8 of the "Structures Manual" for appropriate rating methods.

* Exterior Beam includes 500 lb/ft Superimposed Load for Aesthetics.

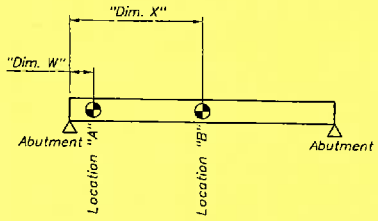

RATING LOCATIONS

Abbreviations:

Inv – Inventory

Op – Operating

Controlling Load Rating			
Limit State	Vehicle	Weight (Tons)	Rating Factor
Strength I (Inv)	HL-93	N/A	1.12

BRIDGE NO. 750743

REVISIONS

DATE	BY	DESCRIPTION	DATE	BY	DESCRIPTION

	NAMES	DATES
DRAWN BY	CAL	01-07
CHECKED BY	HGL	01-07
DESIGNED BY	TED	01-07
CHECKED BY	HGL	01-07
APPROVED BY	T.E. Davidson P.E.	

ENGINEER OF RECORD: PARSONS
3428 MAITLAND AVE., SUITE 450, ORLANDO, FL 32814
PHONE: (407) 702-6100
CERTIFICATE OF AUTHORIZATION NO. 1838
THOMAS E. DAVIDSON, P.E. LIC. NO. 47151

EXPRESSWAY AUTHORITY

ROAD NO.	SR 414
COUNTY	ORANGE
FINANCIAL PROJECT ID	414-211

SHEET TITLE: LRFR - BRIDGE LOAD RATING SUMMARY

PROJECT NAME: MAITLAND BLVD. EXTENSION SR 414 OVER SR 500 (US 441)

SHEET NO. B3-33

33259 1/5/2007 4:16:01 PM P:\246262\246262\ctrl\ref\35R441\03MtlnSTr_LRFR.dgn

PARSONS

PROJECT: OOCEA 211 750743 LR CHECK

NAME: A. DeVault

SUBJECT: SHEAR – WHETHER WEB SHEAR GOVERNS G2 PAST INTERMEDIATE STIFFENERS

DATE: 5-22-2009

PAGE

$d_o = 244.5''$ = 20'4½" SPACING BETWEEN CROSS-FRAMES FOR DIAPHRAGM

$D = 78''$ = DEPTH OF WEB

$t_{web} = 0.625''$ = 5/8"

$F_{yw} = 50$ ksi

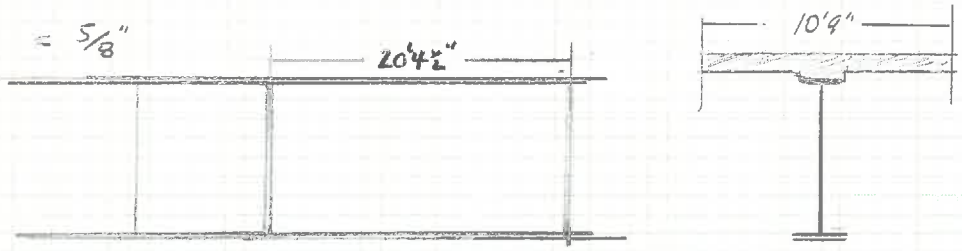

$k = 5.51 = 5 + \frac{5}{(d_o/D)^2} = 5 + \frac{5}{(244.5/78)^2}$ LRFD 6.10.9.3.2-7

$C = 0.322 = \left[\frac{\pi/2}{(D/t_w)^2}\right]\left[\frac{Ek}{F_{yw}}\right] = \left[\frac{\pi/2}{(78/5/8)^2}\right]\left[\frac{29{,}000 \cdot 5.51}{50}\right]$ LRFD 6.10.9.3.2-6

$V_p = 1407$ kip $= \left(\frac{1}{\sqrt{3}}\right)(F_{yw})(D)(t_w) = \frac{50 \cdot 78 \cdot 0.625}{\sqrt{3}}$ LRFD 6.10.9.3.3-2

$V_{cr} = 454$ kip $= C \cdot V_p = 0.322 \cdot 1407$ (vs 413.3 SUBMITTED)

LR SUBMITTED, MERLIN SAYS

$V_{UNFACTORED}$ (@ X = 28 ft) = 141 kip DL

$V_{UNFACTORED}$ (@ X = 28 ft) = 121 kip LL

$V_{CAPACITY\ UNTIGERED}$ = 413 kip ⇒ k=5 ⇒ C = 0.29 ⇒ V_{cr} = (0.28)(1407) ∴ OK WITH ABOVE

LR SUBMITTED SHEAR CAPACITY CHECK @ TABLE 1.2.22.19 GIVES $V_{LRFDmax}$ = 387.4 kip

$RF = \frac{454}{387} = 1.17 \Rightarrow (1.17)(36) = 42.2$ ✓ CHECKS WITH SUMMARY FORM

HOWEVER, WHERE'S THE RF IN MERLIN, EXPLICITLY?

$w_{SLAB} = 1.142 = (8.5/12)(10.75)(0.15)$

$w_G = 0.485 = (1.25 \cdot 24 + 1.75 \cdot 29 + 0.625 \cdot 78)(0.49)(1.10)/144$

$SIP = 0.175 = (10.75 - 2)(0.02)$

$BARRIERS = 0.102 = [(2)(0.420) + (0.485)]/13$

$\Sigma DL \approx 1.904$ klf

$DL \approx (1.904)(189/2) - (1.904)(x) \Rightarrow 180 - 1.904x \Rightarrow DL @ 28.4$ ft UNFACTORED = 126 kip

~~LL ≈ 79 = (0.64)(189/2) (0.64)(28.4) + (1.32)(1)(26)(189 − 28.4 − 18)~~

$LL_{SUBMITTED} * I = 120.6$ k @ 28.4 ft

$DL_{SUBMITTED} = 141.1$ @ 28.4 ft ??

$$\frac{454 - 1.25 \cdot 141.1}{(1.75)(1.001)(120.6)}$$

DL = 1.82 klf = Σ

DL@28.4ft = 120.1 kip

SO LR USES 317 lb/ft MORE

?? MAYBE FOR ARCH OR UTILITIES OR DIAPHRAGMS??

SLAB = 1.142 = (8.5/12)(10.75)(0.15)

GIRD = 0.485 = (0.9 ft/28)(0.49)(1.10) [illegible]

SIP = 0.175 = (10.75 − 2)(0.020)

BARRIER = 0.157 = [(2)(0.420) + (0.485)]/13

THIS CHECK DOESN'T CONSIDER LIGHTER WEIGHTS OF WEBS AT ENDS

CONCLUSION

- SHEAR CAPACITY UNDERSTATED. ASSUMES UNBRACED @ 28 ft, k = 5
- DEAD LOAD OVERSTATED. LR ADDS (2.5 kip FOR RAIL & UTIL) + (0.5 kip SUPERIMPOSED UNIFORM)

PROJECT COLGA 211 750743 SR414 over US441 | NAME A Dekauth

SUBJECT LR CHECK - Virtis input | DATE 5-20 to 5-21-2009 | PAGE

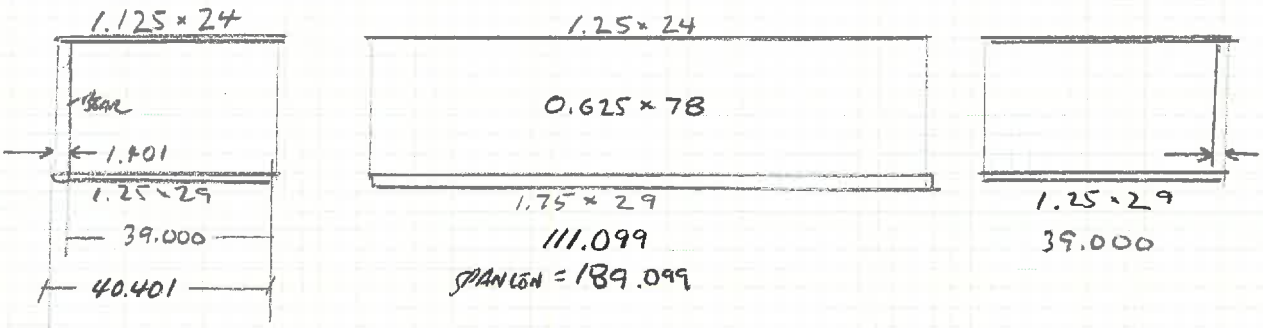

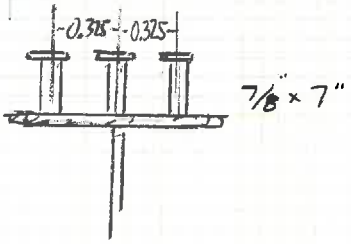

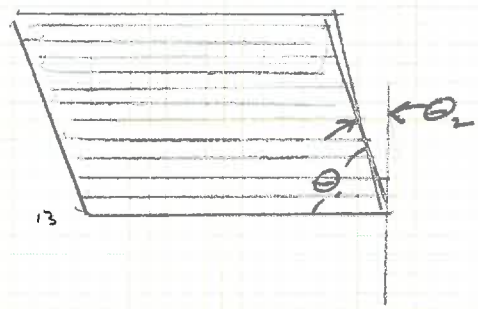

$\theta_1 = 72.486$

$\theta_2 = 17.514$

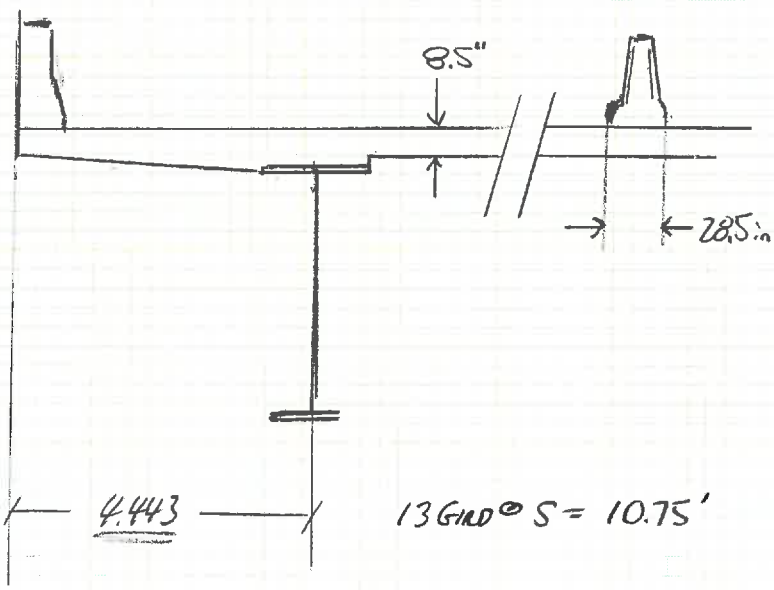

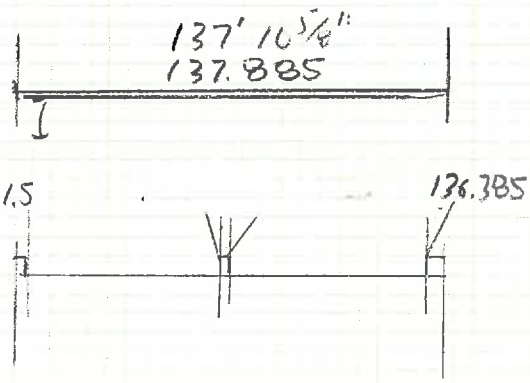

13 GIRD @ S = 10.75'

$SIP_{EXT} = (20)(5 - 2WEB) = \frac{1}{2}(20\,PLF)(10.75 - 2) = (175\,PLF)/2 \Rightarrow 0.0875\ kLF$

$SIP_{INT} = 175\ kLF$

HAUNCH FOR VIRTIS IS CHOICE 2, 0, 2, 39, 2.75, 2.75

LRFR VIRTIS, USING LLDF M = 0.755, LLDF V = 1.001 } FROM LR ⇒ RFM = 1.450 @ MID, RFV =

CONCLUSION

LR OK. HOWEVER, ...

- MERLIN USES 1.0 × 9.5 STIFFENERS, BUT STIFFENERS OF THIS DIMENSION WERE NOT OBSERVED ON PLANS.
- RF GOVERNING SPAN = 1.45 OPR HL93 SUBMITTED LR @ 28 feet → DOES MERLIN THINK THAT STIFFENERS END AT ~24H, THAT DIAPHRAGMS DON'T STIFFEN?!

VIRTIS CHECK LR GIRDERS RF LFR HS20 OPR = 2.64 ⇒ 795 TONS, SERVICE @ MIDSPAN

TABLE 0.0.13.1 YIELD STRESS (Fy) AND LATERAL BRACING DATA (lb)
****

LOCATION		YIELD STRESS		SPACING OF LATERAL BRACING
DISTANCE FROM (ft)	DISTANCE TO (ft)	Fy (ksi)	Fy (WEB) (ksi)	Lb (ft)
0.00	189.10	50.0	50.0	24.12

NOTE: [1] default Fy = 36 ksi

[2] default spacing of lateral bracing = 25 feet

Please refer to AASHTO LRFD Art. 6.7.4 for requirement.

[3] The spacing of lateral bracing is also assumed to be the diaphragm spacing which is used for the calculation of wind effect (code check only).

1

TABLE 0.15.1.2 TRANSVERSE STIFFENER DATA
****

LOCATION		B PARAMETER	YIELD STRESS	STIFFENER SPACING	DIMENSIONS, (in)	
DIST. FROM (ft)	DIST. TO (ft)	AASHTO 6.10.8.1	Fy (ksi)	(ft-in)	STIFF. WIDTH	STIFF. THICK
0.00	7.00	2.4	36.0	7- 0	9.50	1.0000
7.00	20.00	2.4	36.0	14- 0	7.00	0.5000
162.10	182.10	2.4	36.0	14- 0	7.00	0.5000
182.10	189.10	2.4	36.0	7- 0	9.50	1.0000

NOTE: B parameter .... AASHTO LRFD Art.6.10.8.1.4

B = 1.0 ..... for stiffener pairs (default)

= 1.8 ..... for single angles

= 2.4 ..... for single plates

MAITLAND BOULEVARD EXTENSION
STATE ROAD 414 OVER S.R. 500 (U.S. 441)
BRIDGE NO. 750743

BRIDGE LOAD RATING (LRFR)

PROJECT 414-211

EXPRESSWAY
AUTHORITY

ORLANDO-ORANGE COUNTY EXPRESSWAY AUTHORITY

Prepared by:

PARSONS
2420 Lakemont Ave., Suite 450
Orlando, Florida 32814
(407) 702-6800

MAY 2009

BRIDGE LOAD RATING

MAITLAND BOULEVARD EXTENSION
STATE ROAD 414 OVER S.R. 500 (U.S. 441)

Bridge No. 750743
Orange County, Florida

TABLE OF CONTENTS

Table of Contents

Bridge No. 750743

SECTION 1

Bridge Load Rating Summary Form (LRFR) – Span 1, Beam 2 (Controls)
Controlling Rating Summary (Shear Controls) – Span 1, Beam 2 (Controls)

SECTION 2

Merlin Dash Run HL93 – Span 1, Beam 2 (Controls)
Merlin Dash Run FL120 – Span 1, Beam 2 (Controls)

SECTION 3

As-Built Information

SECTION 4

Plans

RECEIVED
MAY 12 2009
D5 KEPLER

SECTION 1

Bridge Load Rating Summary Form (LRFR)

Span 1, Beam 2 (Controls)

Form Revision: 27-Jun-07, D5mod 12-Nov-08

BRIDGE LOAD RATING SUMMARY FORM

BRIDGE DATA

Bridge Number:	750743
Struct. Type Main [Item 43] @:	3 02
Struct. Type Appr. [Item 44] @:	0 00

POSTING DATA

Current Restrictions

Item 41 @:	New - Not yet Open
Is Posting Needed:	No

Proposed Restrictions

Item 70 @:	At/Above Legal Loads

PROGRAM USED

Merlin DASH Version 9.0

BASIS FOR ANALYSIS

Design Drawings:	
As-Built Drawings:	Yes
Shop Drawings:	
Field Measurements:	Yes
Coupon Testing:	
Other:	

LIVE LOAD DISTRIBUTION

AASHTO LFD:	
AASHTO LRFD:	1.0010
SALOD:	
BRUFEM:	
Finite Element on Grillage:	

LONGITUDINAL GOVERNING COMPONENT

Main/Approach Span:	Main
Description:	Multi-Beam
Material:	Steel
Simple/Continuous Span:	Simple
Span Length:	189.10
Flexure, Shear or Principal Tension:	Shear

TRANSVERSE GOVERNING COMPONENT

Main/Approach Span:	
Description:	
Material:	
Deck, Box or Substructure:	
Flexure, Shear or Principal Tension:	

OTHER SPAN OF INTEREST

(If Applicable)

OTHER SPAN OF INTEREST

(If Applicable)

PONTIS DATABASE INPUT

PONTIS APPRAISAL TAB

Description (NBIS Code)	Value	
Design Load (31) @	HL93	
HL93, M9 (H10), M13.5 ((H15), M13.5 (HS15), M18 (H20), MS18 (HS20), MS18 (HS20)+Mod. Pedestrian, Railroad, MS22.5 (HS25), Unknown (NBI), Unknown (P), Not Applicable (P)		
Operating Type (63) @	Load & Resistance Factor	
Unknown, Load Factor, Allowable Stress, Load & Resistance Factor, Load Test, No Rating, Unknown (NBI), Not Applicable (P)		
Operating Rating (64)* @ ( )	52.2	Tons
Inventory Type (65) @	Load & Resistance Factor	
Unknown, Load Factor, Allowable Stress, Load & Resistance Factor, Load Test, No Rating, Unknown (NBI), Not Applicable (P)		
Inventory Rating (66)* @ ( )	40.3	Tons

LEGEND

* If rating is provided as a factor from an LRFR analysis, multiply the rating factor by 36 tons

** If not calculated, enter "-1"

LRFR Rating Only

If Posting is not required, enter "99"

@ BMS Coding Manual available on the FDOT Office of Maintenance website

( ) List Controlling Member & (M=moment, V=shear, pt=post-tensioning) for this Rating

PONTIS LOAD RATING 1 TAB

Description (NBIS Code)	Value	
HS 20/HL 93 Governing Span Length	189.10	FT
Load Rating Origination	As-Built Plans	
Unknown, Design Plans, As-Built Plans, Field Measurements		
Load Rating Date	6/28/2006	
Method Calculation	AASHTO Formula	
Unknown, AASHTO Formula, SALOD, BRUFEM, Other		
Load Distribution Factor	1.0010	
Impact Factor	33.00	
Design Method	LRFD	
Unknown, Working Stress, Load Factor, LRFD, Others		
Design Measure	English	
Unknown, English, Systeme International		

TRUCK OPERATING RATINGS

SU 2**	Enter Contr. Mem. ( )	-1.0	Tons
SU 3**	Enter Contr. Mem. ( )	-1.0	Tons
SU 4**	Enter Contr. Mem. ( )	-1.0	Tons
C 3**	Enter Contr. Mem. ( )	-1.0	Tons
C 4**	Enter Contr. Mem. ( )	-1.0	Tons
C 5**	Enter Contr. Mem. ( )	-1.0	Tons
ST 5**	Enter Contr. Mem. ( )	-1.0	Tons
Recommended SU Posting ##		99	Tons
Recommended C Posting ##		99	Tons
Recommended ST Posting ##		99	Tons

PONTIS LOAD RATING 2 TAB

Description (NBIS Code)	Value	
FL 120 Longitudinal Governing Span Rating	82.2	Tons
SEGMENTAL		
FL 120 Transverse Rating (Segmental)**	-1.0	Tons
Single Axle Transverse Rating**	-1.0	Tons
Tandem Axle Transverse Rating**	-1.0	Tons
Wing Span**	-1.00	FT
Web-to-Web Span**	-1.00	FT
MAXIMUM SPAN		
HS 20 Operating Rating Maximum Span**	-1.0	Tons
FL 120 Longitudinal Maximum Span #	82.2	Tons
FLOOR BEAM		
Floor Beam Present	No = Stop Yes = Continue	
Governing Floor Beam Span**	-1.00	FT
Governing Floor Beam Spacing**	-1.00	FT
Floor Beam HS 20 Rating**	-1.0	Tons
Floor Beam SU 4 Rating**	-1.0	Tons
Floor Beam Inventory Rating Factor** #	-1.0000	
Floor Beam Operating Rating Factor **#	-1.0000	
Floor Beam FL 120 Rating #	NA	Tons

COMMENTS BY ENGINEER

SR 414 Over S.R. 500 (U.S. 441), Bridge 750743, Proj. OOCEA 414-211, New Bridge.
Single Span Bridge over SR 500 (US 441). Design: LRFD. Rating: LRFR. Rating controlled by Strength I Shear at Span 1, Beam #2. FL 120 Permit Rating is controlled by Strength II Shear at Span 1, Beam #2.

COMPUTATIONS

Performed By:	H. G. Lyons, P.E.	Date:	6/28/2006
Checked By:	T. E. Davidson, P.E.	Date:	6/28/2006
Reviewed By:	S. D. Marple, E.I.	Date:	5/8/2009

Responsible Engineer: T. E. Davidson, P.E.
FL P.E. #: 47131
Date: 5/8/2009
Address: PARSONS
2420 Lakemont Avenue
Suite 450
Orlando, FL 32814

RECEIVED MAY 12 2009 D6 KEPLER

THOMAS EDWARD DAVIDSON LICENSE No. 47131 STATE OF FLORIDA PROFESSIONAL ENGINEER 5/11/09

Controlling Rating Summary (Shear Controls)

Span 1, Beam 2 (Controls)

LOAD RATING NOTE:

Portions of the As-Built bridge deck deviated in thickness from the original design. A pocket near the center of the deck had a slightly reduced deck thickness. As-Built measurements and an evaluation by the contractor's engineer are included in the back of this document. The reduction in deck thickness does lead to a slightly reduced rating for moment at mid-span. However, the load rating is controlled by shear. The reduced deck thickness improved the rating for shear due to reduced weight. Many of the girders within the bridge do not fall within the limits of the reduced deck thickness area. Therefore, the ratings are still controlled by the original design dimensions; and the design rating is used in this document.

PARSONS

SUBJECT: MAITLAND EXTENSION — SR412 OVER US441 — SHEAR RATING
JOB NO. 646262
SHEET NO. 2 OF 2
MADE BY: HL DATE: 6/28/06 CHECKED BY: TM DATE: 6/28/06

SHEAR RATING (HL-93)

		INTERIOR	EXTERIOR
UNFACT. D.L. (TABLE 1.2.6.2)			
@ Pt. 0	→	201.6^K	190.5^K
@ Pt. 28.36	→	141.1^K	133.3^K
SHEAR SUMM. COMP. CONSTR (LL+I) (TABLE 1.2.6.4)			
@ Pt 0	→	158.6^K	149.3^K
@ Pt. 28.36	→	120.6^K	113.5^K
SHEAR SUMM. COMP. CONSTR. (LIMIT STATES) ~~STR~~ II (TABLE 1.2.6.5)			
@ Pt. 0	→	466.2^K	439.7^K
@ Pt. 28.36	→	339.2^K	319.8^K
SHEAR CAPACITY (TABLE 1.2.22.19)			
@ Pt. 0	→	769.2^K	769.2^K
@ Pt 28.36	→	413.28^K	413.28^K

PER INSPECTION INTERIOR GIRDER CONTROLS!

$$RF_{@Pt\,0} = \frac{769.62^K - 1.25(201.6^K)}{1.35(158.6^K)} = 2.42\ (\text{OPER}) \Rightarrow 2.42\left(\frac{1.35}{1.25}\right) = 1.87$$

1.87 (INV)

$$RF_{@Pt\,28.36} = \frac{413.28 - 1.25(141.1^K)}{1.35(120.6^K)} = 1.45\ (\text{OPER}) \Rightarrow 1.45\left(\frac{1.35}{1.25}\right) = 1.12$$

1.12 (INV)

RF = 1.12 CONTROLS!

PARSONS

SUBJECT: MAITLAND EXTENSION — SR414 OVER US441 — SHEAR RATING
JOB NO. 646262
SHEET NO. 1 OF 2
MADE BY: HL DATE: 6/28/06 CHECKED BY: TG DATE: 6/28/06

(SIMPLE SPAN STRUCTURES)

SHEAR RATING (FL120)

$$RF = \frac{C - \gamma_{DC}(DC) - \gamma_{DW}(DW) - \gamma_P(P)}{\gamma_{LL}(LL+IM)}$$

$DW = P = 0$

FROM MERLIN-DASH RUN:

TABLE 1.2.6.2 (D.L.) (UNFACT)

	INTERIOR GIRDER	EXTERIOR GIRDER
@ Pt. 0 →	201.6^K	190.5^K
@ Pt. 28.36 →	141.1^K	133.3^K
@ Pt. 160.74 →	141.1^K	133.3^K
@ Pt. 189.10 →	201.6^K	190.5^K

TABLE 1.2.6.5 (SHEAR SUMM. COMP. CONST) ~~476.1^K~~
STR. II

@ Pt. 0 →	476.1^K	449^K
@ Pt. 28.36 →	349.2^K	329.2^K
@ Pt. 160.74 →	349.2^K	329.2^K
@ Pt 189.1 →	476.1^K	449^K

TABLE 1.2.22.19 (SHEAR CAPACITY)

@ Pt 0 →	769.62^K	769.62^K
@ Pt. 28.36 →	413.28^K	413.28^K
@ Pt 160.74 →	413.28^K	413.28^K
@ Pt 189 →	769.62^K	769.62^K

BY INSPECTION, INTER GIRDER CONTROLS @ POINTS 28.36 & 160.74

TABLE 1.2.6.4 (SHEAR SUMMARY COMP. CONST)

LL+I @ Pt. 0 = 166.0^K
LL+I @ Pt 28.36 = 128.0^K

@ Pt 28.36 $$R.F = \frac{413.28^K - 1.25(141.1^K)}{1.35(128.0^K)} = 1.37$$

@ Pt. 0 $$RF = \frac{769.62^K - 1.25(201.6^K)}{1.35(166.0^K)} = 2.31$$

R.F = 1.37 CONTROLS

SECTION 2

Merlin Dash Run HL93

Span 1, Beam 2 (Controls)

HL 93 INTERIOR
RATING

1

```
*************************************
*                                   *
* BRIDGE ENGINEERING SOFTWARE CENTER *
*   DEPARTMENT OF CIVIL ENGINEERING  *
*       UNIVERSITY OF MARYLAND       *
*                                   *
*************************************
```

CHKD.: HL 6/29/06

COPYRIGHT NOTICE AND DISCLAIMER
---

1. NOTICE : COPYRIGHT 1985-2005 THE UNIVERSITY OF MARYLAND, BRIDGE ENGINEERING SOFTWARE CENTER.

2. DISCLAIMER : THE SOFTWARE IS A PROPRIETARY PRODUCT OF THE UNIVERSITY OF MARYLAND, BRIDGE ENGINEERING SOFTWARE CENTER AND ONLY CONDITIONALLY ISSUED. POSSESSION, ACCESS AND USE IS PROHIBITED EXCEPT AS EXPRESSLY AUTHORIZED BY THE UNIVERSITY OF MARYLAND, BRIDGE ENGINEERING SOFTWARE CENTER.

3. WARRANTY AND LIMITATION OF LIABILITY :

(A) UMD REPRESENTS THAT TO THE BEST OF ITS KNOWLEDGE, THE LICENSED MATERIALS DO NOT INFRINGE ANY COPYRIGHT, TRADE SECRET OR PATENT.

(B) THE SELECTION OF APPROPRIATE SOFTWARE, THE COLLECTION AND STORAGE OF DATA, AND THE INTERPRETATION OF OUTPUT ARE LICENSEE'S RESPONSIBILITY, AND NOT UMD'S RESPONSIBILITY. THE LICENSED MATERIALS ARE ONLY TO BE USED AS A TOOL AND NOT AS A SUBSTITUTE FOR LICENSEE'S PROFESSIONAL JUDGMENT.

(C) THE LICENSED MATERIALS WERE FORMERLY OWNED AND DEVELOPED WITH THE ASSISTANCE OF THE STATE HIGHWAY ADMINISTRATION OF THE MARYLAND DEPARTMENT OF TRANSPORTATION ("MDOT"). THE LICENSED MATERIALS ARE MADE AVAILABLE ON AN "AS IS" BASIS. EXCEPT AS EXPRESSLY SET FORTH IN THIS AGREEMENT, BOTH UMD AND MDOT DISCLAIM ANY AND ALL PROMISES, REPRESENTATIONS AND WARRANTIES BOTH EXPRESS AND IMPLIED WITH RESPECT TO THE LICENSED MATERIALS AND ANY SUPPORT SERVICES PROVIDED HEREUNDER, INCLUDING THEIR CONDITION, CONFORMITY TO ANY REPRESENTATION OR DESCRIPTION, THE EXISTENCE OF ANY LATENT OR PATENT DEFECTS THEREIN, AND THEIR MERCHANTABILITY OR FITNESS FOR A PARTICULAR USE OR PURPOSE.

(D) THE CUMULATIVE LIABILITY OF UMD TO LICENSEE FOR ALL CLAIMS, DEMANDS OR ACTIONS ARISING OUT OF OR RELATING TO THE LICENSED MATERIALS AND THIS AGREEMENT, SHALL NOT EXCEED THE TOTAL AMOUNT OF ALL LICENSE FEES PAID TO UMD HEREUNDER DURING THE TWELVE (12) MONTHS

IMMEDIATELY PRECEDING SUCH CLAIM, DEMAND OR ACTION. THIS LIMITATION OF LIABILITY IS INTENDED TO APPLY WITHOUT REGARD TO WHICH OTHER PROVISIONS OF THIS AGREEMENT HAVE BEEN BREACHED OR HAVE PROVEN INEFFECTIVE.

(E) WITHOUT LIMITING THE FOREGOING, IN NO EVENT SHALL UMD BE LIABLE FOR ANY BUSINESS EXPENSE, MACHINE DOWN TIME, LOSS OF PROFITS, ANY INCIDENTAL, SPECIAL, EXEMPLARY OR CONSEQUENTIAL DAMAGES, OR ANY CLAIMS OR DEMANDS BROUGHT AGAINST LICENSEE OR LICENSEE'S CUSTOMERS, EVEN IF UMD HAS BEEN ADVISED OF THE POSSIBILITY OF SUCH CLAIMS OR DEMANDS. THIS LIMITATION UPON DAMAGES AND CLAIMS IS INTENDED TO APPLY WITHOUT REGARD TO WHICH OTHER PROVISIONS OF THIS AGREEMENT HAVE BEEN BREACHED OR HAVE PROVEN INEFFECTIVE.

1

TABLE 0.0.1.1 PROJECT DATA
****

DESCRIPTION	DATE
SR 414 over US 441 - 78" Web - 10'-9" Spa (189.1 CL to CL)	5/22/06

CONTRACT NUMBER	STR NO	STR UNIT	DES -BY-	CHK -BY-	SPECS. USED
414-211	5		NJB		LRFD 3rd Edition

TABLE 0.0.1.2 GENERAL PROGRAM OPTIONS
****

OUTPUT LEVEL (0,1)	SPAN INTERVAL (MAX=20)	CONSTRUCTION 1= COMPOSITE 2= NONCOMP.	ANALYSIS CODE CODE ID	YEAR	UNIT TYPE	DESIGN OPTION	PROGRAM FLOW CONTROL
1	20	1	AASHTO	2004	0	2	3

* output level : 0 = basic output
  1 = detailed output

* span interval : maximum = 20
  default = 10

* structural type : 1 = composite (default)

```
                        2 = noncomposite
                        3 = reinforced concrete
                        4 = prestressed concrete

 * type of unit     : 0 = English (default)
                      1 = Metric
                      2 = Metric input English output
                      3 = English input Metric output

 * design option    : 0 = WSD (default)
                      1 = LFD
                      2 = LRFD


 * program flow     : 0 = DL analysis only
                      1 = DL + LL analysis
                      2 = code check
                      3 = rating
                      4 = design
                      5 = design + code check
                      6 = design + recycle + code check
                      7 = DL stage only
                      8 = DL stage + LL
```

STRUCTURAL DEATAILS FOR DEAD LOAD CALCULATION

	DEAD LOAD				SUPERIMPOSED DEAD LOAD				
AUTO DL 0=NO	SLAB THICK. (IN)	INTEGRAL W. S. (IN)	UNIT WT. (LB/FT3)	S.I.F WT. (LB/FT2)	AREA OF ADD. CONC. (FT*FT) (THE WHOLE BRIDGE)	RAIL/UTIL WT. (LB/FT)	WEARING SURFACE (LB/FT2)	MODULUS 3N	RATIO N
1	8.00	0.50	150.00	20.00	0.00	2502.00	0.00	0.00	0.00

1

BRIDGE ENGINEERING SOFTWARE & TECHNOLOGY CENTER
DEPARTMENT OF CIVIL & ENVIRON. ENGINEERING
UNIVERSITY OF MARYLAND

MERLIN V 9.0
COMPOSITE
LRF -- 2004
INPUT
PAGE 2

TABLE 0.0.3.1 STRUCTURAL DETAILS
****

NUMBER OF GIRDERS	BEAM POSITION 1=INT. 2=EXT.	WIDTH BETWEEN CURBS OR BARRIER (ft)	OVERHANG WIDTH (ft)	EDGE OF SLAB TO CURB (ft)	HAUNCH DEPTH (in)	HAUNCH WIDTH. (in)	COMPOSITE PERCENTAGE AT NEG MOM REGION (%)	STEEL LOAD DETAIL FACTOR >= 1.0

13	1	134.38	4.44	1.75	4.00	30.00	0.00	1.10

---

* WIDTH BETWEEN CURBS OR BARRIERS (ROAD WIDTH) is used for the determination of traffic lanes

* The section properties with composite percentage at negative moment region is calculated by using the linear interpolation between the noncomposite section (N=Inf.) and 100% composite for the analysis at negative moment region.

* DETAIL FACTOR is used for the steel dead load only

TABLE 0.0.3.2 SPAN LENGTHS --- in feet
****

SPAN-1	SPAN-2	SPAN-3	SPAN-4	SPAN-5	SPAN-6	SPAN-7	SPAN-8	SPAN-9	SPAN-10
189.10	0.00	0.00	0.00	0.00	0.00	0.00	0.00	0.00	0.00

TABLE 0.0.3.4 BEAM SPACING --- in feet
****

SPAN-1	SPAN-2	SPAN-3	SPAN-4	SPAN-5	SPAN-6	SPAN-7	SPAN-8	SPAN-9	SPAN-10
10.75	0.00	0.00	0.00	0.00	0.00	0.00	0.00	0.00	0.00

TABLE 0.0.4.1 DEFINITION OF SECTIONS
****

SECTION NO.	STANDARD SECTN NOMINAL DEPTH ID. (in)	WEIGHT (lb/ft)	PLATE GIRDER WEB DEPTH (in)	WEB THICK.	ROLLED SECTIONS WITH COVER PLATES OR PLATE GIRDERS ... (in) TOP PLATE WIDTH	THICK.	BOT. PLATE WIDTH	THICK.	REINFORCED CONCRETE SECTION AREA (in**2)	Ix (in**4)
1	PG		78.0	0.6250	24.00	1.1250	29.00	1.2500		
2	PG		78.0	0.6250	24.00	1.2500	29.00	1.7500		

NOTE: [1] maximum allowable section number is 70

[2] For design option (flow 4, 5 or 6) this card need not be input

1

TABLE 0.0.5.1 DEFINITION OF MEMBERS
****

MEMBER NUMBER (IN ORDER)	MEMB SECT LEFT	END ID RIGHT	MEMBER DESCRIPTN LNGTH (ft)	TYPE 0=PRISMAT	PARAMETERS FOR NONPRISMATIC MEMB S(0)	S(1)	YIELD STRESS (KSI) WEB	TOP	BOT
1	1	1	39.00				50.	50.	50.
2	2	2	111.10				50.	50.	50.
3	1	1	39.00				50.	50.	50.

NOTE: [1] maximum allowable member number is 70.

[2] For design process (flow 4, 5 or 6) this card need not be input

[3] For hybrid section, yield stress defined here will override DATA TYPE 13012 for code checking

1

TABLE 0.0.6.1 AASHTO LIVE LOADING - LOAD TYPE (A)
****

AASHTO LOADING HL - 93	TANDEM LIVE LOAD 1=YES : 0=NO	AASHTO ROAD TYPE 1,2,3 OR 4	ADTT	SIDEWALK LIVE LOAD (k/ft)
HL-93	1	1	0	0.00

HL-93 VEHICLE X FACTOR OF 0.00

NOTE: * Road types 1, 2, 3 and 4 are used for fatigue check.

* Road type 1 is Rural Interstate. 2 is Urban Interstate.
3 is Other Rural. 4 is Other Urban.
truck on the bridge distributed to the girders as designated
in AASHTO LRFD Art.4.6.2.2 for one traffic lane loading.

For Fatigue, Fraction of Truck, p, is based on the Road Types.

Ref. AASHTO LRFD Table C3.6.1.4.2.1.

* Default road type = 1

* Sidewalk live loading is assumed taken by exterior girder only

* HL-93 is for both truck + lane and tandem + lane loading,

1

TABLE 0.8.1.2 SPECIFICATION OF IMPACT AND DISTRIBUTION FACTORS
****

IMPACT FACTOR TO OVERRIDE THE AASHTO FORMULA

	OPTIONAL CALCULATION OF FACTOR						LOADING TYPES		OPTIONAL DISTRIBUTION FACTORS	
SP NO	IMP FCTR STR/SER (%)		DF M- ST/SE	DF M+ FA	DF M- FA	IMP F FA (%)	A D M G C NO=0 ;YES= 1		DF M+ ST/SE	LOADING TYPES A D M G C
1	0.00	0	0.00	0.00	0.00	0.00	0 0 0 0 0		0.00	0 0 0 0 0
1	0.00	0	0.00	0.00	0.00	17.68	0 0 0 0 0		0.00	0 0 0 0 0
2	0.00	0	0.00	0.00	0.00	0.00	0 0 0 0 0		0.00	0 0 0 0 0
2	0.00	0	0.00	0.00	0.00	17.68	0 0 0 0 0		0.00	0 0 0 0 0

NOTE ** : distribution factor - fraction of a wheel load for WSD/LFD
or fraction of an axle load for LRFD
0 = The special distribution factor defined is not applied
to the indicated loading type.

1 = The special distribution factor defined is applied to
the indicated loading type of calculation of all
moment, shear and deflection.

2 = The special distribution factor defined is only applied to the loading type for calculating moment.

3 = The special distribution factor defined is only applied to the loading type for calculating shear.

4 = The special distribution factor defined is only applied to the loading type for calculating deflection.

TABLE 0.0.11.1 DEFINITION OF UNIFORM AND CONCENTRATED LOADS
****

LOAD IDENTIFICATION		UNIFROM LOAD DATA			CONCENTRATED LOAD DATA	
LOAD NO.	DESCRIPTION TYPE	INTENSITY (k/ft)	POSITION FROM (ft)	TO	INTENSITY (Kips)	DISTANCE FROM L SUPT (ft)
1	1	0.500	0.00	189.10	0.00	0.00

NOTE: LOAD TYPE, 0 = (Default) Loads for noncomposite construction or Superimposed Loads for composite construction (In LRFD, it is for DW load)

1 = Superimposed Loads (In LRFD, it is for DC2 load)

2 = Noncomposite Loads,(In LRFD, it is for DC1 load) where N = modulus ratio = Es/Ec

TABLE 0.0.12.3 SHEAR CONNECTOR AND SLAB REINFORCEMENT DATA
****

SHEAR CONNECTOR			Qn VALUE	Zr VALUE	SLAB REINFORCEMENT			CONCRETE	
NO. PER	DIA.	CONNECTOR IN NEGAT. M. REGION	AASHTO ART. 6.10.10.4	AASHTO ART. 6.10.10.2 (kip / per	REBAR YIELD STRESS	BAR AREA PER FOOT OF SLAB	DIST. FROM TOP	COMP. STRENG. AT 28	COMP. ALLOW -ABLE

TRAN. SEC	(in)	0=NO 1=YES	(kip / per connect.)	connector) Truck	Lane	Fy (ksi)	-------- (in**2)	----- (in)	DAYS (ksi)	----- (ksi)
3	0.875	0	0.00	0.0	0.0	60.0	1.00	4.00	4.50	0.00

NOTE: Qr = nominal resistance of the shear connector
= (phi)sc x Qn
... see AASHTO LRFD Eqs.6.10.10.4.1-1,4.3-1 or 4.3-2

Zr = shear fatigue resistance of an individual shear connector
... see AASHTO LRFD Eqs.6.10.10.2-1 & -2

fc' = unit ultimate compressive strength of concrete as determined by cylinder test at the age of 28 days
= 4 ksi (default)

fc = allowable compressive strength of concrete
= 0.85fc' (default)

* default number of shear connector per trans. section = 3

* If the shear connectors and slab reinforcements are supplied in the negative moment region, the contribution of rebar on the section properties in the negative moment region (for N = 3n & N = n) will be considered.

* If Zr left blank, Road type input in Data 06012 and 7/8"-diameter studs are assumed

* default rebar yield stress = 60 ksi

1

BRIDGE ENGINEERING SOFTWARE & TECHNOLOGY CENTER
DEPARTMENT OF CIVIL & ENVIRON. ENGINEERING
UNIVERSITY OF MARYLAND

MERLIN V 9.0
COMPOSITE
LRF -- 2004
INPUT
PAGE 9

TABLE 0.12.4.2 DESIGN OPTION (1) ---- DESIGN METHOD & STIFFENER OPTION
****

SECTION ID.	DESIGN METHOD	TRANSVERSE AND LONGITUDINAL STIFFENER OPTION: TRANSVERSE/LONGITUDINAL	BEARING STIFFENER	
0,4=PLATE GIRDER	0=MIN. WEIGHT	0 = DO NOT USE	0= A709-36,	1= -50
1,2=WIDE FLANGE	1=MIN. COST	1 = USE IF NECESSARY	2= BEST OF 0,1	3= -50W
0	0	1	0	1

NOTE: Design method: 0 = minimum weight
objective function = cross-sectional

area

1 = minimum cost
objective function = cost function

Section ID : 0 = Plate Girder design with constant flange
only in the pos. mom. area
1 = Wide Flange compact design
2 = Wide Flange braced noncompact design
3 = Plate Girder design with constant flange across

** All supports are assumed to have bearing stiffener
regardless the stiffener option

1

DESIGN OPTION (4) ---- MATERIAL AND FABRICATION COST ---- (12072)
****

MATERIALS			MATERIAL COST			FABRICATION COST	
ID.	ASTM DESINATION	Fy (ksi)	BASE PRICE ($/lb)	EXTRAS (SIZE/WIDTH) ADJUSTMENT (%)	UNIT PRICE ($/lb)	ADJUSTMENT (%)	UNIT PRICE ($/lb)
1	A-709	50.0	0.000	0.0	0.000	0.0	0.00

NOTE: [1] ASTM = American Society for Testing and Materials

[2] ASTM DESINATION ..... A-36, A-572, or A-588

[3] If the cost data are not input, all the built-in
cost data will be used for the design processes

[4] The default material is ASTM A-36 (Fy = 36 ksi). The maximum
no. of allowable materials is 3.

[5] Without inputing 12082, field splice location will be
determined by the program according to contra-flexure points,
and the first material property listed here will be used
along the whole bridge

1

TABLE 0.0.13.1 YIELD STRESS (Fy) AND LATERAL BRACING DATA (lb)
****

LOCATION		YIELD STRESS		SPACING OF LATERAL BRACING
DISTANCE FROM (ft)	DISTANCE TO (ft)	Fy (ksi)	Fy (WEB) (ksi)	Lb (ft)
0.00	189.10	50.0	50.0	24.12

NOTE: [1] default Fy = 36 ksi

[2] default spacing of lateral bracing = 25 feet

Please refer to AASHTO LRFD Art. 6.7.4 for requirement.

[3] The spacing of lateral bracing is also assumed to be the diaphragm spacing which is used for the calculation of wind effect (code check only).

1

TABLE 0.15.1.2 TRANSVERSE STIFFENER DATA
****

LOCATION		B PARAMETER	YIELD STRESS	STIFFENER SPACING	DIMENSIONS, (in)	
DIST. FROM (ft)	DIST. TO (ft)	AASHTO 6.10.8.1	Fy (ksi)	(ft-in)	STIFF. WIDTH	STIFF. THICK
0.00	7.00	2.4	36.0	7- 0	9.50	1.0000
7.00	20.00	2.4	36.0	14- 0	7.00	0.5000
162.10	182.10	2.4	36.0	14- 0	7.00	0.5000
182.10	189.10	2.4	36.0	7- 0	9.50	1.0000

NOTE: B parameter .... AASHTO LRFD Art.6.10.8.1.4

B = 1.0 ..... for stiffener pairs (default)

= 1.8 ..... for single angles

= 2.4 ..... for single plates

TABLE 1.2.1.1=PROGRAM ASSUMPTIONS
****

NO.	D E S C R I P T I O N S
1	Small deflection theory
2	Material is elastic
3	Beam length is much greater than lateral dimensions
4	Torsional effects are neglected
5	Shear deformations are neglected
6	Two kinematic degree-of-freedom are assumed 'at each joint (vertical deflection and bending rotation)
7	Concentrated joint loads
8	Uniform member loads
9	Transformed sections are used for composite sections .... see AASHTO Art.10.38.1.4 or LRFD Art.6.10.1.1.1b
10	Sections symmetrical about vertical, principal axis
11	Unshored construction
12	Hinged bridge ends

F A C T O R S U S E D B Y L R F D		
13	GAMMA for Load DC maximum	= 1.25
14	GAMMA for Load DC minimum	= 0.90
15	GAMMA for Load DW minimum	= 1.50
16	GAMMA for Load DW minimum	= 0.65
17	GAMMA for LL Load Strength I	= 1.75
18	GAMMA for LL Load Strength II	= 1.35
19	GAMMA for LL Load Service I	= 1.00

20	GAMMA for LL Load Service II	= 1.30
21	GAMMA for LL Load Fatigue	= 0.75
22	ETA for Service Limit State	= 1.00
23	ETA for Strength Limit State	= 1.00

1

TABLE 1.2.2.1=LOADING INFORMATION
****

AVERAGE DEAD LOAD INTENSITIES
****

SPAN NO.	SLAB (K/FT)	+	STEEL (K/FT)	=	TOTAL (K/FT)
1	1.482		0.4577		1.9399

SUPERIMPOSED DEAD LOADS
****

LOAD		INTENSITY (K or K/Ft)	DIST FROM (Ft)	DIST TO (Ft)
1	DC2	0.192	0.000	189.100

1

TABLE 1.1.3.1=BRIDGE SUPERSTRUCTURE QUANTITIES

****

CONCRETE DECK				STEEL	SUPERSTRUCTURE TOTAL WEIGHT
UNIT WEIGHT (pcf)	VOLUME (ft**3)	VOLUME (yard**3)	TOTAL WEIGHT (kip)	TOTAL WEIGHT (kip)	(kip)
150.00	24291.1	899.7	3643.7	1125.2	4768.84

NOTE: [1] Concrete unit weight assumed to be 150 lb/ft**3

[2] Superimposed dead load not included

[3] Dead load detail factor for steel beam = 1.10 is included.

1

TABLE 1.1.3.2=DISTRIBUTION OF LRFD LIVE LOADS
****

SPAN NO.	AASHTO LOADING (A)	DUMP TRUCK (D)	MAXIMUM TRUCK (M)	SPECIAL TRUCK (G,C)	
1	0.755	0.755	0.755	0.755	FOR STRENGTH POSITIVE MOMENT
	1.001				FOR STRENGTH POSITIVE SHEAR
	1.047				FOR STRENGTH POSITIVE SKEWED
END SHEAR					
1	0.405				FOR FATIGUE POSITIVE MOMENT
	0.658				FOR FATIGUE POSITIVE SHEAR
	0.688				FOR FATIGUE POSITIVE SKEWED
END SHEAR					

1

TABLE 1.2.4.1=NONCOMPOSITE SECTION PROPERTIES FOR N=INFINITY
****

MOMENT OF WEB LOCATION OF N.A. ELASTIC SECTION MODULUS

SP NO	IN NO	D FROM L SUPT (ft)	INERTIA Ix (in**4)	DEPTH D (in)	FROM BOT OF STEEL Y(BS) (in)	STEEL BOT. (in**3)	STEEL TOP. (in**3)
1	0	0.00	122691.0	78.0	36.96	3319.4	2826.2
1	1	9.45	122691.0	78.0	36.96	3319.4	2826.2
1	2	18.91	122691.0	78.0	36.96	3319.4	2826.2
1	3	28.36	122691.0	78.0	36.96	3319.4	2826.2
1	4	37.82	122691.0	78.0	36.96	3319.4	2826.2
1	5	47.28	147147.9	78.0	34.30	4289.7	3151.1
1	6	56.73	147147.9	78.0	34.30	4289.7	3151.1
1	7	66.19	147147.9	78.0	34.30	4289.7	3151.1
1	8	75.64	147147.9	78.0	34.30	4289.7	3151.1
1	9	85.10	147147.9	78.0	34.30	4289.7	3151.1
1	10	94.55	147147.9	78.0	34.30	4289.7	3151.1
1	11	104.01	147147.9	78.0	34.30	4289.7	3151.1
1	12	113.46	147147.9	78.0	34.30	4289.7	3151.1
1	13	122.92	147147.9	78.0	34.30	4289.7	3151.1
1	14	132.37	147147.9	78.0	34.30	4289.7	3151.1
1	15	141.83	147147.9	78.0	34.30	4289.7	3151.1
1	16	151.28	122691.0	78.0	36.96	3319.4	2826.2
1	17	160.74	122691.0	78.0	36.96	3319.4	2826.2
1	18	170.19	122691.0	78.0	36.96	3319.4	2826.2
1	19	179.65	122691.0	78.0	36.96	3319.4	2826.2
1	20	189.10	122691.0	78.0	36.96	3319.4	2826.2

NOTE: For rolled section, the 5th column is the depth d (inch)

1

TABLE 1.2.4.2=COMPOSITE SECTION PROPERTIES FOR N = 21.00
****

SP NO	IN NO	D FROM L SUPT (ft)	MOMENT OF INERTIA Ix (in**4)	Q/Ix Q=1ST. MOMENT OF INERTIA (1/in)	ELASTIC SECTION MODULUS,(in**3) STEEL BOT.	STEEL TOP.	CONCRETE(SLAB) TOP.
1	0	0.00	203195.0	0.008110	3957.1	7000.5	5092.5
1	1	9.45	203195.0	0.008110	3957.1	7000.5	5092.5
1	2	18.91	203195.0	0.008110	3957.1	7000.5	5092.5
1	3	28.36	203195.0	0.008110	3957.1	7000.5	5092.5
1	4	37.82	203195.0	0.008110	3957.1	7000.5	5092.5
1	5	47.28	241690.1	0.007555	5030.3	7334.4	5530.3
1	6	56.73	241690.1	0.007555	5030.3	7334.4	5530.3
1	7	66.19	241690.1	0.007555	5030.3	7334.4	5530.3

1	8	75.64	241690.1	0.007555	5030.3	7334.4	5530.3
1	9	85.10	241690.1	0.007555	5030.3	7334.4	5530.3
1	10	94.55	241690.1	0.007555	5030.3	7334.4	5530.3
1	11	104.01	241690.1	0.007555	5030.3	7334.4	5530.3
1	12	113.46	241690.1	0.007555	5030.3	7334.4	5530.3
1	13	122.92	241690.1	0.007555	5030.3	7334.4	5530.3
1	14	132.37	241690.1	0.007555	5030.3	7334.4	5530.3
1	15	141.83	241690.1	0.007555	5030.3	7334.4	5530.3
1	16	151.28	203195.0	0.008110	3957.1	7000.5	5092.5
1	17	160.74	203195.0	0.008110	3957.1	7000.5	5092.5
1	18	170.19	203195.0	0.008110	3957.1	7000.5	5092.5
1	19	179.65	203195.0	0.008110	3957.1	7000.5	5092.5
1	20	189.10	203195.0	0.008110	3957.1	7000.5	5092.5

TABLE 1.2.4.3=COMPOSITE SECTION PROPERTIES FOR N = 7.00
****

SP NO	IN NO	D FROM L SUPT (ft)	MOMENT OF INERTIA Ix (in**4)	Q/Ix Q=1ST. MOMENT OF INERTIA (1/in)	ELASTIC SECTION MODULUS,(in**3) STEEL BOT.	STEEL TOP.	CONCRETE(SLAB) TOP.
1	0	0.00	276082.3	0.011309	4293.2	17181.5	10246.7
1	1	9.45	276082.3	0.011309	4293.2	17181.5	10246.7
1	2	18.91	276082.3	0.011309	4293.2	17181.5	10246.7
1	3	28.36	276082.3	0.011309	4293.2	17181.5	10246.7
1	4	37.82	276082.3	0.011309	4293.2	17181.5	10246.7
1	5	47.28	334170.1	0.010759	5438.9	17084.9	11025.3
1	6	56.73	334170.1	0.010759	5438.9	17084.9	11025.3
1	7	66.19	334170.1	0.010759	5438.9	17084.9	11025.3
1	8	75.64	334170.1	0.010759	5438.9	17084.9	11025.3
1	9	85.10	334170.1	0.010759	5438.9	17084.9	11025.3
1	10	94.55	334170.1	0.010759	5438.9	17084.9	11025.3
1	11	104.01	334170.1	0.010759	5438.9	17084.9	11025.3
1	12	113.46	334170.1	0.010759	5438.9	17084.9	11025.3
1	13	122.92	334170.1	0.010759	5438.9	17084.9	11025.3
1	14	132.37	334170.1	0.010759	5438.9	17084.9	11025.3
1	15	141.83	334170.1	0.010759	5438.9	17084.9	11025.3
1	16	151.28	276082.3	0.011309	4293.2	17181.5	10246.7
1	17	160.74	276082.3	0.011309	4293.2	17181.5	10246.7
1	18	170.19	276082.3	0.011309	4293.2	17181.5	10246.7
1	19	179.65	276082.3	0.011309	4293.2	17181.5	10246.7
1	20	189.10	276082.3	0.011309	4293.2	17181.5	10246.7

Please read NOTE on the following page

1

NOTE [1] If the section modulus for the top flange indicates overflows (***), the neutral axis may be very closed to the top of the top flange.

[2] The section properties shown in this table are used for the calculation of stresses.

[3] AASHTO Art.10.38.1.6 or LRFD Art.6.10.1.1 --- Composite sections in simple spans and the positive moment regions of continuous spans should preferably be proportioned so that the neutral axis lies below the top surface of the steel beam. Concrete 'on the tension side of the neutral axis shall not be considered in calculating resulting moments. In the negative moment regions of continuous spans, only the slab reinforcement can be considered to act compositely with the steel beams in calculating resisting moments. Mechanical anchorages shall be provided in the composite regions to develop stresses on the plane joining the concrete and the steel. Concrete on the tension side of the neutral axis may be considered in computing moments of inertia for deflections and for determining stiffness factors used in calculating moments and shears

1

TABLE 1.2.5.1=NONCOMPOSITE DEAD LOAD MOMENTS FOR N=INFINITY (UNFACTORED)
****

SP NO	IN D NO	FROM L SUPT (ft)	DEAD LOAD BEAM (k-ft)	DEAD LOAD SLAB (k-ft)	CONCENTRATED LOADS (k-ft)	UNIFORM LOADS (k-ft)	TOTAL (k-ft) NONCOMPOSITE DEAD	TOTAL (k-ft) LOAD
1	0	0.00	0.0	0.0	0.0	0.0	0.0	
1	1	9.45	388.7	1258.8	0.0	0.0	1647.5	
1	2	18.91	736.5	2385.1	0.0	0.0	3121.6	
1	3	28.36	1043.4	3378.8	0.0	0.0	4422.2	
1	4	37.82	1309.4	4240.1	0.0	0.0	5549.5	

1	5	47.28	1534.4	4968.9	0.0	0.0	6503.3
1	6	56.73	1718.5	5565.1	0.0	0.0	7283.7
1	7	66.19	1861.8	6028.9	0.0	0.0	7890.7
1	8	75.64	1964.0	6360.2	0.0	0.0	8324.2
1	9	85.10	2025.4	6558.9	0.0	0.0	8584.3
1	10	94.55	2045.9	6625.2	0.0	0.0	8671.1
1	11	104.01	2025.4	6558.9	0.0	0.0	8584.3
1	12	113.46	1964.1	6360.2	0.0	0.0	8324.2
1	13	122.92	1861.8	6028.9	0.0	0.0	7890.7
1	14	132.37	1718.5	5565.1	0.0	0.0	7283.7
1	15	141.83	1534.4	4968.9	0.0	0.0	6503.3
1	16	151.28	1309.4	4240.1	0.0	0.0	5549.5
1	17	160.74	1043.4	3378.8	0.0	0.0	4422.3
1	18	170.19	736.5	2385.1	0.0	0.0	3121.6
1	19	179.65	388.7	1258.8	0.0	0.0	1647.5
1	20	189.10	0.0	0.0	0.0	0.0	0.0

TABLE 1.2.5.2=COMPOSITE DEAD LOAD MOMENTS FOR N = 21.00 (UNFACTORED)
****

SP NO	IN NO	D FROM L SUPT (ft)	UNIFORM SUPERIMPOSED DEAD LOAD (k-ft) DW	DC2	CONCENTRATED LOADS (k-ft) DW	DC2	OTHER UNIFORM LOADS	TOTAL (k-ft) -- COMPOSITE DEAD LOAD
1	0	0.00	0.0	0.0	0.0	0.0	0.0	0.0
1	1	9.45	0.0	163.5	0.0	0.0	0.0	163.5
1	2	18.91	0.0	309.7	0.0	0.0	0.0	309.7
1	3	28.36	0.0	438.7	0.0	0.0	0.0	438.7
1	4	37.82	0.0	550.6	0.0	0.0	0.0	550.6
1	5	47.28	0.0	645.2	0.0	0.0	0.0	645.2
1	6	56.73	0.0	722.6	0.0	0.0	0.0	722.6
1	7	66.19	0.0	782.8	0.0	0.0	0.0	782.8
1	8	75.64	0.0	825.9	0.0	0.0	0.0	825.9
1	9	85.10	0.0	851.7	0.0	0.0	0.0	851.7
1	10	94.55	0.0	860.3	0.0	0.0	0.0	860.3
1	11	104.01	0.0	851.7	0.0	0.0	0.0	851.7
1	12	113.46	0.0	825.9	0.0	0.0	0.0	825.9
1	13	122.92	0.0	782.8	0.0	0.0	0.0	782.8
1	14	132.37	0.0	722.6	0.0	0.0	0.0	722.6
1	15	141.83	0.0	645.2	0.0	0.0	0.0	645.2
1	16	151.28	0.0	550.6	0.0	0.0	0.0	550.6
1	17	160.74	0.0	438.7	0.0	0.0	0.0	438.7
1	18	170.19	0.0	309.7	0.0	0.0	0.0	309.7
1	19	179.65	0.0	163.5	0.0	0.0	0.0	163.5
1	20	189.10	0.0	0.0	0.0	0.0	0.0	0.0

TABLE 1.2.5.3=COMPOSITE LIVE LOAD MOMENTS FOR N = 7.00 (UNFACTORED)
****

SP NO	IN NO	D FROM L SUPT (ft)	SIDEWALK (MAXIMUM) POSITIVE (k-ft)	SIDEWALK (MAXIMUM) NEGATIVE (k-ft)	LL+I ,(k-ft), LOAD TYPE= HL -93 MAXIMUM POSITIVE	GOVERN. LOAD TYPE	MAXIMUM NEGATIVE	GOVERN. LOAD TYPE
1	0	0.00	0.0	0.0	0.0	HL-93	0.0	HL-93
1	1	9.45	0.0	0.0	1026.0	HL-93	0.0	HL-93
1	2	18.91	0.0	0.0	1940.5	HL-93	0.0	HL-93
1	3	28.36	0.0	0.0	2743.4	HL-93	0.0	HL-93
1	4	37.82	0.0	0.0	3434.8	HL-93	0.0	HL-93
1	5	47.28	0.0	0.0	4011.8	HL-93	0.0	HL-93
1	6	56.73	0.0	0.0	4482.9	HL-93	0.0	HL-93
1	7	66.19	0.0	0.0	4849.4	HL-93	0.0	HL-93
1	8	75.64	0.0	0.0	5107.2	HL-93	0.0	HL-93
1	9	85.10	0.0	0.0	5249.2	HL-93	0.0	HL-93
1	10	94.55	0.0	0.0	5296.6	HL-93	0.0	HL-93
1	11	104.01	0.0	0.0	5249.2	HL-93	0.0	HL-93
1	12	113.46	0.0	0.0	5107.2	HL-93	0.0	HL-93
1	13	122.92	0.0	0.0	4849.4	HL-93	0.0	HL-93
1	14	132.37	0.0	0.0	4482.9	HL-93	0.0	HL-93
1	15	141.83	0.0	0.0	4011.8	HL-93	0.0	HL-93
1	16	151.28	0.0	0.0	3434.8	HL-93	0.0	HL-93
1	17	160.74	0.0	0.0	2743.4	HL-93	0.0	HL-93
1	18	170.19	0.0	0.0	1940.5	HL-93	0.0	HL-93
1	19	179.65	0.0	0.0	1026.0	HL-93	0.0	HL-93
1	20	189.10	0.0	0.0	0.0	HL-93	0.0	HL-93

TABLE 1.2.5.3A=LIVE LOAD MOMENT RANGE FOR N = 7.0 (k-ft) (UNFACTORED)
****

SP NO	IN NO	D FROM L SUPT (ft)	TRUCK ONLY POS	NEG	RANGE
1	0	0.00	0.	0.	0.

1	1	9.45	0.	0.	0.
1	2	18.91	0.	0.	0.
1	3	28.36	0.	0.	0.
1	4	37.82	0.	0.	0.
1	5	47.28	0.	0.	0.
1	6	56.73	0.	0.	0.
1	7	66.19	0.	0.	0.
1	8	75.64	0.	0.	0.
1	9	85.10	0.	0.	0.
1	10	94.55	0.	0.	0.
1	11	104.01	0.	0.	0.
1	12	113.46	0.	0.	0.
1	13	122.92	0.	0.	0.
1	14	132.37	0.	0.	0.
1	15	141.83	0.	0.	0.
1	16	151.28	0.	0.	0.
1	17	160.74	0.	0.	0.
1	18	170.19	0.	0.	0.
1	19	179.65	0.	0.	0.
1	20	189.10	0.	0.	0.

TABLE 1.2.5.4=MOMENT SUMMARY FOR COMPOSITE CONSTRUCTION (UNFACTORED)
****

SP NO	IN NO	D FROM L SUPT (ft)	DEAD LOAD NON COMP. N=Infin. (k-ft)	DEAD LOAD COMP. N=21.0 (k-ft)	LL+I:N= 7.0 LOAD TYPE= HL - 93 MAXIMUM POSITIVE (k-ft)	GOVERN LOAD TYPE	MAXIMUM NEGATIVE (k-ft)	GOVERN LOAD TYPE	TOTAL MAXIMUM POSITIVE (k-ft)	TOTAL MAXIMUM NEGATIVE (k-ft)
1	0	0.00	0.0	0.0	0.0	HL-93	0.0	HL-93	0.0	0.0
1	1	9.45	1647.5	163.5	1026.0	HL-93	0.0	HL-93	2837.0	1810.9
1	2	18.91	3121.6	309.7	1940.5	HL-93	0.0	HL-93	5371.8	3431.3
1	3	28.36	4422.2	438.7	2743.4	HL-93	0.0	HL-93	7604.4	4861.0
1	4	37.82	5549.5	550.6	3434.8	HL-93	0.0	HL-93	9534.8	6100.0
1	5	47.28	6503.3	645.2	4011.8	HL-93	0.0	HL-93	11160.3	7148.5
1	6	56.73	7283.7	722.6	4482.9	HL-93	0.0	HL-93	12489.2	8006.3
1	7	66.19	7890.7	782.8	4849.4	HL-93	0.0	HL-93	13522.9	8673.5
1	8	75.64	8324.2	825.9	5107.2	HL-93	0.0	HL-93	14257.3	9150.1
1	9	85.10	8584.3	851.7	5249.2	HL-93	0.0	HL-93	14685.2	9436.0
1	10	94.55	8671.1	860.3	5296.6	HL-93	0.0	HL-93	14827.9	9531.3
1	11	104.01	8584.3	851.7	5249.2	HL-93	0.0	HL-93	14685.2	9436.0
1	12	113.46	8324.2	825.9	5107.2	HL-93	0.0	HL-93	14257.3	9150.1
1	13	122.92	7890.7	782.8	4849.4	HL-93	0.0	HL-93	13522.9	8673.5
1	14	132.37	7283.7	722.6	4482.9	HL-93	0.0	HL-93	12489.2	8006.3
1	15	141.83	6503.3	645.2	4011.8	HL-93	0.0	HL-93	11160.3	7148.5

1	16	151.28	5549.5	550.6	3434.8	HL-93	0.0	HL-93	9534.9	6100.1
1	17	160.74	4422.3	438.7	2743.4	HL-93	0.0	HL-93	7604.4	4861.0
1	18	170.19	3121.6	309.7	1940.5	HL-93	0.0	HL-93	5371.8	3431.3
1	19	179.65	1647.5	163.5	1026.0	HL-93	0.0	HL-93	2837.0	1811.0
1	20	189.10	0.0	0.0	0.0	HL-93	0.0	HL-93	0.0	0.0

1

TABLE 1.2.5.5=MOMENT SUMMARY FOR COMPOSITE CONSTRUCTION (LRFD)
****

SP NO	IN D NO	FROM L SUPT (ft)	SERVICE I (k-ft)	SERVICE II (k-ft)	STRENGTH I (k-ft)	STRENGTH II (k-ft)	STRENGTH IV (k-ft)	FATIGUE RANGE (k-ft)
1	0	0.00	0.0	0.0	0.0	0.0	0.0	0.0
1	1	9.45	2837.0	3144.8	4059.2	3648.8	2716.4	0.0
1	2	18.91	5371.8	5953.9	7685.0	6908.8	5146.9	0.0
1	3	28.36	7604.4	8427.4	10877.2	9779.8	7291.5	0.0
1	4	37.82	9534.8	10565.3	13635.9	12262.0	9150.1	0.0
1	5	47.28	11160.3	12363.8	15956.3	14351.5	10722.7	0.0
1	6	56.73	12489.2	13834.0	17852.9	16059.7	12009.5	0.0
1	7	66.19	13522.9	14977.7	19328.3	17388.6	13010.3	0.0
1	8	75.64	14257.3	15789.4	20375.2	18332.3	13725.1	0.0
1	9	85.10	14685.2	16260.0	20981.2	18881.5	14154.0	0.0
1	10	94.55	14827.9	16416.9	21183.2	19064.5	14297.0	0.0
1	11	104.01	14685.2	16260.0	20981.2	18881.5	14154.0	0.0
1	12	113.46	14257.3	15789.4	20375.2	18332.3	13725.1	0.0
1	13	122.92	13522.9	14977.7	19328.3	17388.6	13010.3	0.0
1	14	132.37	12489.2	13834.0	17852.9	16059.8	12009.5	0.0
1	15	141.83	11160.3	12363.8	15956.3	14351.6	10722.8	0.0
1	16	151.28	9534.9	10565.3	13636.0	12262.1	9150.1	0.0
1	17	160.74	7604.4	8427.5	10877.2	9779.9	7291.5	0.0
1	18	170.19	5371.8	5953.9	7685.0	6908.8	5146.9	0.0
1	19	179.65	2837.0	3144.8	4059.3	3648.9	2716.5	0.0
1	20	189.10	0.0	0.0	0.0	0.0	0.0	0.0

1

TABLE 1.2.6.1=NONCOMPOSITE DEAD LOAD SHEAR FOR N=INFINITY (UNFACTORED)

****

SPAN NO.	IN NO	DIST FROM LEFT SUPT (ft)	STEEL BEAM (kip)	CONC. SLAB (kip)	CONCENT. LOAD (kip)	OTHER UNIFORM LOAD (kip)	TOTAL NONCOMPOSITE DEAD LOAD (kip)
1	0	0.00	43.3	140.1	0.0	0.0	183.4
1	1	9.45	38.9	126.1	0.0	0.0	165.1
1	2	18.91	34.6	112.1	0.0	0.0	146.7
1	3	28.36	30.3	98.1	0.0	0.0	128.4
1	4	37.82	26.0	84.1	0.0	0.0	110.1
1	5	47.28	21.6	70.1	0.0	0.0	91.7
1	6	56.73	17.3	56.1	0.0	0.0	73.4
1	7	66.19	13.0	42.0	0.0	0.0	55.0
1	8	75.64	8.7	28.0	0.0	0.0	36.7
1	9	85.10	4.3	14.0	0.0	0.0	18.3
1	10	94.55	0.0	0.0	0.0	0.0	0.0
1	11	104.01	-4.3	-14.0	0.0	0.0	-18.3
1	12	113.46	-8.7	-28.0	0.0	0.0	-36.7
1	13	122.92	-13.0	-42.0	0.0	0.0	-55.0
1	14	132.37	-17.3	-56.1	0.0	0.0	-73.4
1	15	141.83	-21.6	-70.1	0.0	0.0	-91.7
1	16	151.28	-26.0	-84.1	0.0	0.0	-110.1
1	17	160.74	-30.3	-98.1	0.0	0.0	-128.4
1	18	170.19	-34.6	-112.1	0.0	0.0	-146.7
1	19	179.65	-38.9	-126.1	0.0	0.0	-165.1
1	20	189.10	-43.3	-140.1	0.0	0.0	-183.4

1

BRIDGE ENGINEERING SOFTWARE & TECHNOLOGY CENTER
DEPARTMENT OF CIVIL & ENVIRON. ENGINEERING
UNIVERSITY OF MARYLAND

MERLIN V 9.0
COMPOSITE
LRF -- 2004
ANALYSIS
PAGE 28

TABLE 1.2.6.2=NONCOMPOSITE AND COMPOSITE DEAD LOAD SHEAR SUMMARY (UNFACTORED)
****

SP NO	IN NO	D L FROM SUPT (ft)	COMPOSITE (k) UNIFORM LOADS DW	COMPOSITE (k) UNIFORM LOADS DC2	COMPOSITE (k) CONCENTRATED LOADS DW	COMPOSITE (k) CONCENTRATED LOADS DC2	TOTAL COMPOSITE (k)	TOTAL NONCOMPOSITE (k)	TOTAL DEAD LOADS (k)
1	0	0.00	0.0	18.2	0.0	0.0	18.2	183.4	201.6
1	1	9.45	0.0	16.4	0.0	0.0	16.4	165.1	181.5
1	2	18.91	0.0	14.6	0.0	0.0	14.6	146.7	161.3
1	3	28.36	0.0	12.7	0.0	0.0	12.7	128.4	141.1
1	4	37.82	0.0	10.9	0.0	0.0	10.9	110.1	121.0
1	5	47.28	0.0	9.1	0.0	0.0	9.1	91.7	100.8
1	6	56.73	0.0	7.3	0.0	0.0	7.3	73.4	80.6

1	7	66.19	0.0	5.5	0.0	0.0	5.5	55.0	60.5
1	8	75.64	0.0	3.6	0.0	0.0	3.6	36.7	40.3
1	9	85.10	0.0	1.8	0.0	0.0	1.8	18.3	20.2
1	10	94.55	0.0	0.0	0.0	0.0	0.0	0.0	0.0
1	11	104.01	0.0	-1.8	0.0	0.0	-1.8	-18.3	-20.2
1	12	113.46	0.0	-3.6	0.0	0.0	-3.6	-36.7	-40.3
1	13	122.92	0.0	-5.5	0.0	0.0	-5.5	-55.0	-60.5
1	14	132.37	0.0	-7.3	0.0	0.0	-7.3	-73.4	-80.6
1	15	141.83	0.0	-9.1	0.0	0.0	-9.1	-91.7	-100.8
1	16	151.28	0.0	-10.9	0.0	0.0	-10.9	-110.1	-121.0
1	17	160.74	0.0	-12.7	0.0	0.0	-12.7	-128.4	-141.1
1	18	170.19	0.0	-14.6	0.0	0.0	-14.6	-146.7	-161.3
1	19	179.65	0.0	-16.4	0.0	0.0	-16.4	-165.1	-181.5
1	20	189.10	0.0	-18.2	0.0	0.0	-18.2	-183.4	-201.6

1

TABLE 1.2.6.3=LIVE LOAD SHEAR FOR N = 7.0 (UNFACTORED)
****

SP NO	IN NO	D FROM L SUPT (ft)	SIDEWALK (MAXIMUM) POSITIVE (kips)	SIDEWALK (MAXIMUM) NEGATIVE (kips)	LL+I ,(kips), LOAD TYPE= HL -93 MAXIMUM POSITIVE	GOVERN. LOAD TYPE	MAXIMUM NEGATIVE	GOVERN. LOAD TYPE
1	0	0.00	0.0	0.0	158.6	HL-93	0.0	HL-93
1	1	9.45	0.0	0.0	143.6	HL-93	-2.9	HL-93
1	2	18.91	0.0	0.0	130.7	HL-93	-6.3	HL-93
1	3	28.36	0.0	0.0	120.6	HL-93	-11.2	HL-93
1	4	37.82	0.0	0.0	110.8	HL-93	-16.9	HL-93
1	5	47.28	0.0	0.0	101.3	HL-93	-23.0	HL-93
1	6	56.73	0.0	0.0	92.1	HL-93	-29.5	HL-93
1	7	66.19	0.0	0.0	83.2	HL-93	-36.3	HL-93
1	8	75.64	0.0	0.0	74.6	HL-93	-43.3	HL-93
1	9	85.10	0.0	0.0	66.3	HL-93	-50.7	HL-93
1	10	94.55	0.0	0.0	58.4	HL-93	-58.4	HL-93
1	11	104.01	0.0	0.0	50.7	HL-93	-66.3	HL-93
1	12	113.46	0.0	0.0	43.3	HL-93	-74.6	HL-93
1	13	122.92	0.0	0.0	36.3	HL-93	-83.2	HL-93
1	14	132.37	0.0	0.0	29.5	HL-93	-92.1	HL-93
1	15	141.83	0.0	0.0	23.0	HL-93	-101.3	HL-93
1	16	151.28	0.0	0.0	16.9	HL-93	-110.8	HL-93
1	17	160.74	0.0	0.0	11.2	HL-93	-120.6	HL-93
1	18	170.19	0.0	0.0	6.3	HL-93	-130.7	HL-93
1	19	179.65	0.0	0.0	2.9	HL-93	-143.6	HL-93
1	20	189.10	0.0	0.0	0.0	HL-93	-158.6	HL-93

TABLE 1.2.6.3A=LIVE LOAD SHEAR RANGE FOR N = 7.0 (kips) (UNFACTORED)
****

SP NO	IN NO	D FROM L SUPT (ft)	TRUCK ONLY POS	NEG	RANGE
1	0	0.00	0.	0.	0.
1	1	9.45	0.	0.	0.
1	2	18.91	0.	0.	0.
1	3	28.36	0.	0.	0.
1	4	37.82	0.	0.	0.
1	5	47.28	0.	0.	0.
1	6	56.73	0.	0.	0.
1	7	66.19	0.	0.	0.
1	8	75.64	0.	0.	0.
1	9	85.10	0.	0.	0.
1	10	94.55	0.	0.	0.
1	11	104.01	0.	0.	0.
1	12	113.46	0.	0.	0.
1	13	122.92	0.	0.	0.
1	14	132.37	0.	0.	0.
1	15	141.83	0.	0.	0.
1	16	151.28	0.	0.	0.
1	17	160.74	0.	0.	0.
1	18	170.19	0.	0.	0.
1	19	179.65	0.	0.	0.
1	20	189.10	0.	0.	0.

TABLE 1.2.6.3B=MINIMUM WELD SIZE
****

SP NO	IN NO	D FROM L SUPT (ft)	Vr [1] (Kip)	TOP FLANGE Q/I [2] (1/in)	SHEAR FLOW [3]	WELD SIZE (in)	BOTTOM FLANGE Q/I (1/in)	SHEAR FLOW	WELD SIZE (in)
1	0	0.00	0.0	.13069E-01	0.00	0.3125*	.80349E-02	0.00	0.3125*
1	1	9.45	0.0	.13069E-01	0.00	0.3125*	.80349E-02	0.00	0.3125*
1	2	18.91	0.0	.13069E-01	0.00	0.3125*	.80349E-02	0.00	0.3125*
1	3	28.36	0.0	.13069E-01	0.00	0.3125*	.80349E-02	0.00	0.3125*
1	4	37.82	0.0	.13069E-01	0.00	0.3125*	.80349E-02	0.00	0.3125*

1	5	47.28	0.0	.12675E-01	0.00	0.3125*.88339E-02	0.00	0.3125*
1	6	56.73	0.0	.12675E-01	0.00	0.3125*.88339E-02	0.00	0.3125*
1	7	66.19	0.0	.12675E-01	0.00	0.3125*.88339E-02	0.00	0.3125*
1	8	75.64	0.0	.12675E-01	0.00	0.3125*.88339E-02	0.00	0.3125*
1	9	85.10	0.0	.12675E-01	0.00	0.3125*.88339E-02	0.00	0.3125*
1	10	94.55	0.0	.12675E-01	0.00	0.3125*.88339E-02	0.00	0.3125*
1	11	104.01	0.0	.12675E-01	0.00	0.3125*.88339E-02	0.00	0.3125*
1	12	113.46	0.0	.12675E-01	0.00	0.3125*.88339E-02	0.00	0.3125*
1	13	122.92	0.0	.12675E-01	0.00	0.3125*.88339E-02	0.00	0.3125*
1	14	132.37	0.0	.12675E-01	0.00	0.3125*.88339E-02	0.00	0.3125*
1	15	141.83	0.0	.12675E-01	0.00	0.3125*.88339E-02	0.00	0.3125*
1	16	151.28	0.0	.13069E-01	0.00	0.3125*.80349E-02	0.00	0.3125*
1	17	160.74	0.0	.13069E-01	0.00	0.3125*.80349E-02	0.00	0.3125*
1	18	170.19	0.0	.13069E-01	0.00	0.3125*.80349E-02	0.00	0.3125*
1	19	179.65	0.0	.13069E-01	0.00	0.3125*.80349E-02	0.00	0.3125*
1	20	189.10	0.0	.13069E-01	0.00	0.3125*.80349E-02	0.00	0.3125*

NOTE: [1] Vr = range of shear due to live loads and impact

[2] For non-composite construction:

Q/I = (At * Dt) / Inc -- top flange
Inc = moment of inertia of non-composite section
At = area of top flange
Dt = distance between the center of top flange and neutral axis
Q/I = (Ab * Db) / Inc -- bottom flange
Ab = area of bottom flange
Db = distance between the center of bottom flange and neutral axis

For composite construction:

Q/I = (Q/Ic) + (At * Dt) / Ic -- top flange
Q = statical moment about the neutral axis of the composite section of the transformed compressive concrete area or the area of reinforcement embedded in the concrete for negative moment
Ic = moment of inertia for composite section
Q/I = (Ab * Db) / Ic -- bottom flange

[3] shear flow = (Vr * Q) / (2 * I)

* -- minimum weld size governs

TABLE 1.2.6.4=SHEAR SUMMARY FOR COMPOSITE CONSTRUCTION (UNFACTORED)
****

SP NO	IN NO	D L	FROM SUPT	TOTAL DEAD LOADS	TOTAL L+I , LOAD TYPE = HL - 93 POSITIVE GOVERN.	NEGATIVE GOVERN.	MAX. SHEAR (kips)

		(ft)	(k)	(k)	LOAD TYPE	(k)	LOAD TYPE	POS.	NEG.
1	0	0.00	201.6	158.6	HL-93	0.0	HL-93	360.3	201.6
1	1	9.45	181.5	143.6	HL-93	-2.9	HL-93	325.1	178.5
1	2	18.91	161.3	130.7	HL-93	-6.3	HL-93	292.0	155.0
1	3	28.36	141.1	120.6	HL-93	-11.2	HL-93	261.7	129.9
1	4	37.82	121.0	110.8	HL-93	-16.9	HL-93	231.7	104.1
1	5	47.28	100.8	101.3	HL-93	-23.0	HL-93	202.1	77.8
1	6	56.73	80.6	92.1	HL-93	-29.5	HL-93	172.7	51.2
1	7	66.19	60.5	83.2	HL-93	-36.3	HL-93	143.7	24.2
1	8	75.64	40.3	74.6	HL-93	-43.3	HL-93	114.9	-3.0
1	9	85.10	20.2	66.3	HL-93	-50.7	HL-93	86.5	-30.5
1	10	94.55	0.0	58.4	HL-93	-58.4	HL-93	58.4	-58.4
1	11	104.01	-20.2	50.7	HL-93	-66.3	HL-93	30.5	-86.5
1	12	113.46	-40.3	43.3	HL-93	-74.6	HL-93	3.0	-114.9
1	13	122.92	-60.5	36.3	HL-93	-83.2	HL-93	-24.2	-143.7
1	14	132.37	-80.6	29.5	HL-93	-92.1	HL-93	-51.2	-172.7
1	15	141.83	-100.8	23.0	HL-93	-101.3	HL-93	-77.8	-202.1
1	16	151.28	-121.0	16.9	HL-93	-110.8	HL-93	-104.1	-231.7
1	17	160.74	-141.1	11.2	HL-93	-120.6	HL-93	-129.9	-261.7
1	18	170.19	-161.3	6.3	HL-93	-130.7	HL-93	-155.0	-292.0
1	19	179.65	-181.5	2.9	HL-93	-143.6	HL-93	-178.5	-325.1
1	20	189.10	-201.6	0.0	HL-93	-158.6	HL-93	-201.6	-360.3

1

TABLE 1.2.6.5=SHEAR SUMMARY FOR COMPOSITE CONSTRUCTION (LRFD)
****

SP NO	IN NO	D FROM L SUPT (ft)	SERVICE I (kips)	SERVICE II (kips)	STRENGTH I (kips)	STRENGTH II (kips)	STRENGTH IV (kips)	FATIGUE RANGE (kips)
1	0	0.00	360.3	407.9	529.7	466.2	302.4	0.0
1	1	9.45	325.1	368.2	478.2	420.7	272.2	0.0
1	2	18.91	292.0	331.2	430.3	378.0	241.9	0.0
1	3	28.36	261.7	297.9	387.4	339.2	211.7	0.0
1	4	37.82	231.7	265.0	345.1	300.7	181.5	0.0
1	5	47.28	202.1	232.5	303.2	262.7	151.2	0.0
1	6	56.73	172.7	200.4	262.0	225.1	121.0	0.0
1	7	66.19	143.7	168.6	221.2	187.9	90.7	0.0
1	8	75.64	114.9	137.3	181.0	151.1	60.5	0.0
1	9	85.10	86.5	106.4	141.3	114.8	30.2	0.0
1	10	94.55	58.4	75.9	102.1	78.8	0.0	0.0
1	11	104.01	-86.5	-106.4	-141.3	-114.8	-30.2	0.0
1	12	113.46	-114.9	-137.3	-181.0	-151.1	-60.5	0.0
1	13	122.92	-143.7	-168.6	-221.2	-187.9	-90.7	0.0

1	14	132.37	-172.7	-200.4	-262.0	-225.1	-121.0	0.0
1	15	141.83	-202.1	-232.5	-303.2	-262.7	-151.2	0.0
1	16	151.28	-231.7	-265.0	-345.1	-300.7	-181.5	0.0
1	17	160.74	-261.7	-297.9	-387.4	-339.2	-211.7	0.0
1	18	170.19	-292.0	-331.2	-430.3	-378.0	-241.9	0.0
1	19	179.65	-325.1	-368.2	-478.2	-420.7	-272.2	0.0
1	20	189.10	-360.3	-407.9	-529.7	-466.2	-302.4	0.0

1

TABLE 1.2.7.2=SUMMARY OF REACTIONS (UNFACTORED)
****

SUPT NO.	TOTAL DEAD LOADS (K)	LL+I ,(K), LOAD TYPE = HL - 93 MINIMUM	GOVERN. LOAD TYPE	MAXIMUM	GOVERN. LOAD TYPE		TOTAL DL+LL+I (L R F D) MINIMUM	MAXIMUM
1	201.61	0.00	HL-93	158.65	HL-93	ST1	181.45	529.65
						ST2	181.45	466.19
						ST4	302.42	302.42
						SE1	201.61	360.26
						SE2	201.61	407.86
2	201.61	0.00	HL-93	158.65	HL-93	ST1	181.45	529.65
						ST2	181.45	466.19
						ST4	302.42	302.42
						SE1	201.61	360.26
						SE2	201.61	407.86

NOTE: [1] " - " Indicates Uplift

ST1 = STRENGTH I; ST2 = STRENGTH II; SE1 = SERVICE I;SE2 = SERVICE II.

1

TABLE 1.2.8.1=COMP AND NONCOMP DL DEFL FOR INFINITY AND N = 21.0 (UNFACTORED)
****

SP NO	IN NO	D FROM L SUPT (ft)	NONCOMPOSITE DL BEAM (in)	SLAB (in)	COMPOSITE DL CONCENTRATED (in)	UNIFORM (in)	T O T A L NONCOMPOSITE (in)	+COMPOSITE (in)	= DL (in)

1	0	0.00	0.0000	0.0000	0.0000	0.0000	0.0000	0.0000	0.0000
1	1	9.45	-0.5125	-1.6597	0.0000	-0.1309	-2.1722	-0.1309	-2.3032
1	2	18.91	-1.0083	-3.2652	0.0000	-0.2576	-4.2736	-0.2576	-4.5312
1	3	28.36	-1.4723	-4.7677	0.0000	-0.3762	-6.2400	-0.3762	-6.6162
1	4	37.82	-1.8911	-6.1239	0.0000	-0.4834	-8.0150	-0.4834	-8.4984
1	5	47.28	-2.2571	-7.3092	0.0000	-0.5771	-9.5663	-0.5771	-10.1434
1	6	56.73	-2.5676	-8.3147	0.0000	-0.6566	-10.8823	-0.6566	-11.5389
1	7	66.19	-2.8160	-9.1191	0.0000	-0.7202	-11.9351	-0.7202	-12.6553
1	8	75.64	-2.9972	-9.7057	0.0000	-0.7666	-12.7029	-0.7666	-13.4694
1	9	85.10	-3.1073	-10.0625	0.0000	-0.7948	-13.1698	-0.7948	-13.9645
1	10	94.55	-3.1443	-10.1822	0.0000	-0.8042	-13.3265	-0.8042	-14.1307
1	11	104.01	-3.1073	-10.0625	0.0000	-0.7948	-13.1698	-0.7948	-13.9645
1	12	113.46	-2.9972	-9.7057	0.0000	-0.7666	-12.7029	-0.7666	-13.4694
1	13	122.92	-2.8160	-9.1191	0.0000	-0.7202	-11.9351	-0.7202	-12.6553
1	14	132.37	-2.5676	-8.3147	0.0000	-0.6566	-10.8823	-0.6566	-11.5389
1	15	141.83	-2.2571	-7.3092	0.0000	-0.5771	-9.5663	-0.5771	-10.1433
1	16	151.28	-1.8911	-6.1239	0.0000	-0.4834	-8.0150	-0.4834	-8.4984
1	17	160.74	-1.4723	-4.7677	0.0000	-0.3762	-6.2400	-0.3762	-6.6162
1	18	170.19	-1.0083	-3.2652	0.0000	-0.2576	-4.2736	-0.2576	-4.5312
1	19	179.65	-0.5125	-1.6597	0.0000	-0.1309	-2.1722	-0.1309	-2.3032
1	20	189.10	0.0000	0.0000	0.0000	0.0000	0.0000	0.0000	0.0000

NOTE: " - " Indicates downward deflections

NOTE: The total noncomposite DL deflection is the sum of the deflections due to beam, slab, arbitrary DL uniform load and arbitrary DL concentrated load.

NOTE: Due to space limit only beam deflections and slab deflections are printed out.

1

TABLE 1.2.8.1A=CAMBER INFORMATION (UNFACTORED)
****

SP NO	IN D NO	L FROM SUPT (ft)	NONCOMPOSITE DEAD LOADS (in) STEEL DEFL.	CAMBER SIZE	SLAB DEFL.	CAMBER SIZE	COMPOSITE DL (in) DEFL.	CAMBER SIZE	TOTAL (in) DEFL.	CAMBER SIZE
1	0	0.0	0.000	--	0.000	--	0.000	--	0.000	--
1	1	9.5	-0.513	0 9/16	-1.660	1 11/16	-0.131	0 3/16	-2.303	2 5/16
1	2	18.9	-1.008	1 1/16	-3.265	3 5/16	-0.258	0 5/16	-4.531	4 9/16
1	3	28.4	-1.472	1 1/ 2	-4.768	4 13/16	-0.376	0 7/16	-6.616	6 5/ 8
1	4	37.8	-1.891	1 15/16	-6.124	6 1/ 8	-0.483	0 1/ 2	-8.498	8 1/ 2
1	5	47.3	-2.257	2 5/16	-7.309	7 5/16	-0.577	0 5/ 8	-10.143	10 3/16
1	6	56.7	-2.568	2 5/ 8	-8.315	8 3/ 8	-0.657	0 11/16	-11.539	11 9/16
1	7	66.2	-2.816	2 7/ 8	-9.119	9 1/ 8	-0.720	0 3/ 4	-12.655	12 11/16
1	8	75.6	-2.997	3 0/16	-9.706	9 3/ 4	-0.767	0 13/16	-13.469	13 1/ 2

1	9	85.1	-3.107	3	1/ 8	-10.062	10	1/16	-0.795	0	13/16	-13.965	14	0/16
1	10	94.6	-3.144	3	3/16	-10.182	10	3/16	-0.804	0	13/16	-14.131	14	3/16
1	11	104.0	-3.107	3	1/ 8	-10.062	10	1/16	-0.795	0	13/16	-13.965	14	0/16
1	12	113.5	-2.997	3	0/16	-9.706	9	3/ 4	-0.767	0	13/16	-13.469	13	1/ 2
1	13	122.9	-2.816	2	7/ 8	-9.119	9	1/ 8	-0.720	0	3/ 4	-12.655	12	11/16
1	14	132.4	-2.568	2	5/ 8	-8.315	8	3/ 8	-0.657	0	11/16	-11.539	11	9/16
1	15	141.8	-2.257	2	5/16	-7.309	7	5/16	-0.577	0	5/ 8	-10.143	10	3/16
1	16	151.3	-1.891	1	15/16	-6.124	6	1/ 8	-0.483	0	1/ 2	-8.498	8	1/ 2
1	17	160.7	-1.472	1	1/ 2	-4.768	4	13/16	-0.376	0	7/16	-6.616	6	5/ 8
1	18	170.2	-1.008	1	1/16	-3.265	3	5/16	-0.258	0	5/16	-4.531	4	9/16
1	19	179.6	-0.513	0	9/16	-1.660	1	11/16	-0.131	0	3/16	-2.303	2	5/16
1	20	189.1	0.000	--		0.000	--		0.000	--		0.000	--	

NOTE: for camber, please refer to AASHTO Art.10.14 or LRFD Art. 6.7.2

1

TABLE 1.2.8.2=MAXIMUM LIVE LOAD DEFLECTION FOR COMPOSITE CONSTRUCTION
****
(UNFACTORED)

SPAN NO.	D FROM L SUPT (ft)	NUMBER OF LANE -----AND------ DIST. FACTOR FOR LL DEFL.	LL + I. DEFLECTION (inch)	GOVERN. LOAD TYPE	1/800 OF SPAN L AASHTO 2.5.2.6.2	ROTATION [5] Rad.
1	94.55	11 0.550	-1.396	HL-93	2.84	0.00343
		12 0.600	-1.523	HL-93	2.84	0.00343

NOTE: [1] " - " indicates downward deflection

[2] The distribution factor for LL+I deflection is defined as

DF = (NL/Ng)*(RF)lane ..... AASHTO LRFD Art. 2.5.2.6

where NL= no. of traffic lanes
Ng= no. of girders
(RF)lane = reduction factor from AASHTO LRFD Art. 3.6.1.1.2

[3] This table may be replaced by the optional criteria specified in AASHTO LRFD Art. 3.6.1.3.2

[4] The number of traffic lanes is determined according to AASHTO LRFD Art.3.6.1.1.1

[5] Max rotations at left (1st line) & right (2nd line) supports of the span without averaging, factor and impact

1

TABLE 1.2.9.1=NONCOMPOSITE DEAD LOAD STRESSES FOR N=INFINITY (UNFACTORED)
****

SP NO	IN NO	D FROM L SUPT (ft)	STEEL DEAD LOAD STEEL BEAM TOP (ksi)	STEEL DEAD LOAD STEEL BEAM BOT (ksi)	OTHER DEAD LOAD STEEL BEAM TOP (ksi)	OTHER DEAD LOAD STEEL BEAM BOT (ksi)	TOTAL DEAD LOAD STEEL BEAM TOP (ksi)	TOTAL DEAD LOAD STEEL BEAM BOT (ksi)
1	0	0.00	0.00	0.00	0.00	0.00	0.00	0.00
1	1	9.45	-1.65	1.41	-5.34	4.55	-7.00	5.96
1	2	18.91	-3.13	2.66	-10.13	8.62	-13.25	11.29
1	3	28.36	-4.43	3.77	-14.35	12.22	-18.78	15.99
1	4	37.82	-5.56	4.73	-18.00	15.33	-23.56	20.06
1	5	47.28	-5.84	4.29	-18.92	13.90	-24.77	18.19
1	6	56.73	-6.54	4.81	-21.19	15.57	-27.74	20.38
1	7	66.19	-7.09	5.21	-22.96	16.87	-30.05	22.07
1	8	75.64	-7.48	5.49	-24.22	17.79	-31.70	23.29
1	9	85.10	-7.71	5.67	-24.98	18.35	-32.69	24.01
1	10	94.55	-7.79	5.72	-25.23	18.53	-33.02	24.26
1	11	104.01	-7.71	5.67	-24.98	18.35	-32.69	24.01
1	12	113.46	-7.48	5.49	-24.22	17.79	-31.70	23.29
1	13	122.92	-7.09	5.21	-22.96	16.87	-30.05	22.07
1	14	132.37	-6.54	4.81	-21.19	15.57	-27.74	20.38
1	15	141.83	-5.84	4.29	-18.92	13.90	-24.77	18.19
1	16	151.28	-5.56	4.73	-18.00	15.33	-23.56	20.06
1	17	160.74	-4.43	3.77	-14.35	12.22	-18.78	15.99
1	18	170.19	-3.13	2.66	-10.13	8.62	-13.25	11.29
1	19	179.65	-1.65	1.41	-5.34	4.55	-7.00	5.96
1	20	189.10	0.00	0.00	0.00	0.00	0.00	0.00

1

TABLE 1.2.9.2=COMPOSITE DL STRESS FOR N = 21.0 AND TOTAL DL STRESSES
****
(UNFACTORED)

SP NO	IN NO	D FROM L SUPT (ft)	SUPERIMPOSED DEAD LOAD, (ksi) CONCRETE TOP	SUPERIMPOSED DEAD LOAD, (ksi) STEEL BEAM TOP	SUPERIMPOSED DEAD LOAD, (ksi) STEEL BEAM BOT	TOTAL DEAD LOAD, (ksi) CONCRETE TOP	TOTAL DEAD LOAD, (ksi) STEEL BEAM TOP	TOTAL DEAD LOAD, (ksi) STEEL BEAM BOT

1	0	0.00	0.00	0.00	0.00	0.00	0.00	0.00
1	1	9.45	-0.02	-0.28	0.50	-0.02	-7.28	6.45
1	2	18.91	-0.03	-0.53	0.94	-0.03	-13.79	12.22
1	3	28.36	-0.05	-0.75	1.33	-0.05	-19.53	17.32
1	4	37.82	-0.06	-0.94	1.67	-0.06	-24.51	21.73
1	5	47.28	-0.07	-1.06	1.54	-0.07	-25.82	19.73
1	6	56.73	-0.07	-1.18	1.72	-0.07	-28.92	22.10
1	7	66.19	-0.08	-1.28	1.87	-0.08	-31.33	23.94
1	8	75.64	-0.09	-1.35	1.97	-0.09	-33.05	25.26
1	9	85.10	-0.09	-1.39	2.03	-0.09	-34.08	26.05
1	10	94.55	-0.09	-1.41	2.05	-0.09	-34.43	26.31
1	11	104.01	-0.09	-1.39	2.03	-0.09	-34.08	26.05
1	12	113.46	-0.09	-1.35	1.97	-0.09	-33.05	25.26
1	13	122.92	-0.08	-1.28	1.87	-0.08	-31.33	23.94
1	14	132.37	-0.07	-1.18	1.72	-0.07	-28.92	22.10
1	15	141.83	-0.07	-1.06	1.54	-0.07	-25.82	19.73
1	16	151.28	-0.06	-0.94	1.67	-0.06	-24.51	21.73
1	17	160.74	-0.05	-0.75	1.33	-0.05	-19.53	17.32
1	18	170.19	-0.03	-0.53	0.94	-0.03	-13.79	12.22
1	19	179.65	-0.02	-0.28	0.50	-0.02	-7.28	6.45
1	20	189.10	0.00	0.00	0.00	0.00	0.00	0.00

1

TABLE 1.2.9.3=LIVE LOAD STRESSES FOR N = 7.0 (UNFACTORED)
****

SP NO	IN NO	D L	FROM SUPT (ft)	MAXIMUM POSITIVE,(ksi) CONCR. TOP	STEEL TOP	STEEL BOT	MAXIMUM NEGATIVE,(ksi) CONCR. TOP	STEEL TOP	STEEL BOT	STRESS RANGE STEEL TOP	STEEL BOT
1	0		0.00	0.00	0.00	0.00	0.00	0.00	0.00	0.00	0.00
1	1		9.45	-0.17	-0.72	2.87	0.00	0.00	0.00	0.38	1.54
1	2		18.91	-0.32	-1.36	5.42	0.00	0.00	0.00	0.73	2.91
1	3		28.36	-0.46	-1.92	7.67	0.00	0.00	0.00	1.03	4.12
1	4		37.82	-0.57	-2.40	9.60	0.00	0.00	0.00	1.29	5.15
1	5		47.28	-0.62	-2.82	8.85	0.00	0.00	0.00	1.51	4.75
1	6		56.73	-0.70	-3.15	9.89	0.00	0.00	0.00	1.69	5.31
1	7		66.19	-0.75	-3.41	10.70	0.00	0.00	0.00	1.83	5.74
1	8		75.64	-0.79	-3.59	11.27	0.00	0.00	0.00	1.93	6.05
1	9		85.10	-0.82	-3.69	11.58	0.00	0.00	0.00	1.98	6.22
1	10		94.55	-0.82	-3.72	11.69	0.00	0.00	0.00	2.00	6.27
1	11		104.01	-0.82	-3.69	11.58	0.00	0.00	0.00	1.98	6.22
1	12		113.46	-0.79	-3.59	11.27	0.00	0.00	0.00	1.93	6.05
1	13		122.92	-0.75	-3.41	10.70	0.00	0.00	0.00	1.83	5.74
1	14		132.37	-0.70	-3.15	9.89	0.00	0.00	0.00	1.69	5.31

1	15	141.83	-0.62	-2.82	8.85	0.00	0.00	0.00	1.51	4.75
1	16	151.28	-0.57	-2.40	9.60	0.00	0.00	0.00	1.29	5.15
1	17	160.74	-0.46	-1.92	7.67	0.00	0.00	0.00	1.03	4.12
1	18	170.19	-0.32	-1.36	5.42	0.00	0.00	0.00	0.73	2.91
1	19	179.65	-0.17	-0.72	2.87	0.00	0.00	0.00	0.38	1.54
1	20	189.10	0.00	0.00	0.00	0.00	0.00	0.00	0.00	0.00

TABLE 1.2.9.3A=LIVE LOAD STRESS RANGE FOR N = 7.0 (ksi) (UNFACTORED)
****

SP NO	IN NO	D FROM L SUPT (ft)	TOP OF TOP FLANGE TRUCK ONLY	GOVERNING STRESS RANGE	LOAD TP	LOAD TYPE	BOT OF BOT FLANGE TRUCK ONLY	GOVERNING STRESS RANGE	LOAD TP	LOAD TYPE
1	0	0.00	0.0	0.0	C	HL	0.0	0.0	T	HL
1	1	9.45	0.0	0.0	C	HL	0.0	0.0	T	HL
1	2	18.91	0.0	0.0	C	HL	0.0	0.0	T	HL
1	3	28.36	0.0	0.0	C	HL	0.0	0.0	T	HL
1	4	37.82	0.0	0.0	C	HL	0.0	0.0	T	HL
1	5	47.28	0.0	0.0	C	HL	0.0	0.0	T	HL
1	6	56.73	0.0	0.0	C	HL	0.0	0.0	T	HL
1	7	66.19	0.0	0.0	C	HL	0.0	0.0	T	HL
1	8	75.64	0.0	0.0	C	HL	0.0	0.0	T	HL
1	9	85.10	0.0	0.0	C	HL	0.0	0.0	T	HL
1	10	94.55	0.0	0.0	C	HL	0.0	0.0	T	HL
1	11	104.01	0.0	0.0	C	HL	0.0	0.0	T	HL
1	12	113.46	0.0	0.0	C	HL	0.0	0.0	T	HL
1	13	122.92	0.0	0.0	C	HL	0.0	0.0	T	HL
1	14	132.37	0.0	0.0	C	HL	0.0	0.0	T	HL
1	15	141.83	0.0	0.0	C	HL	0.0	0.0	T	HL
1	16	151.28	0.0	0.0	C	HL	0.0	0.0	T	HL
1	17	160.74	0.0	0.0	C	HL	0.0	0.0	T	HL
1	18	170.19	0.0	0.0	R	HL	0.0	0.0	R	HL
1	19	179.65	0.0	0.0	R	HL	0.0	0.0	R	HL
1	20	189.10	0.0	0.0	R	HL	0.0	0.0	R	HL

TABLE 1.2.9.5A=SERVICE I TOTAL (DC+DW+LL+I) STRESS SUMMARY
****

SP NO	IN NO	D FROM L SUPT (ft)	YIELD STRESS Fy (ksi) TOP	YIELD STRESS Fy (ksi) BOT	TOTAL POSITIVE ,(ksi) CONCR. TOP	TOTAL POSITIVE ,(ksi) STEEL BEAM TOP	TOTAL POSITIVE ,(ksi) STEEL BEAM BOT	TOTAL NEGATIVE ,(ksi) CONCR. TOP	TOTAL NEGATIVE ,(ksi) STEEL BEAM TOP	TOTAL NEGATIVE ,(ksi) STEEL BEAM BOT
1	0	0.00	50.	50.	0.00	0.00	0.00	0.00	0.00	0.00
1	1	9.45	50.	50.	-0.19	-7.99	9.32	-0.02	-7.28	6.45
1	2	18.91	50.	50.	-0.36	-15.14	17.65	-0.03	-13.79	12.22
1	3	28.36	50.	50.	-0.51	-21.45	24.99	-0.05	-19.53	17.32
1	4	37.82	50.	50.	-0.64	-26.91	31.33	-0.06	-24.51	21.73
1	5	47.28	50.	50.	-0.69	-28.64	28.58	-0.07	-25.82	19.73
1	6	56.73	50.	50.	-0.77	-32.07	31.99	-0.07	-28.92	22.10
1	7	66.19	50.	50.	-0.83	-34.74	34.64	-0.08	-31.33	23.94
1	8	75.64	50.	50.	-0.88	-36.64	36.52	-0.09	-33.05	25.26
1	9	85.10	50.	50.	-0.90	-37.77	37.63	-0.09	-34.08	26.05
1	10	94.55	50.	50.	-0.91	-38.15	37.99	-0.09	-34.43	26.31
1	11	104.01	50.	50.	-0.90	-37.77	37.63	-0.09	-34.08	26.05
1	12	113.46	50.	50.	-0.88	-36.64	36.52	-0.09	-33.05	25.26
1	13	122.92	50.	50.	-0.83	-34.74	34.64	-0.08	-31.33	23.94
1	14	132.37	50.	50.	-0.77	-32.07	31.99	-0.07	-28.92	22.10
1	15	141.83	50.	50.	-0.69	-28.64	28.58	-0.07	-25.82	19.73
1	16	151.28	50.	50.	-0.64	-26.91	31.33	-0.06	-24.51	21.73
1	17	160.74	50.	50.	-0.51	-21.45	24.99	-0.05	-19.53	17.32
1	18	170.19	50.	50.	-0.36	-15.14	17.65	-0.03	-13.79	12.22
1	19	179.65	50.	50.	-0.19	-7.99	9.32	-0.02	-7.28	6.45
1	20	189.10	50.	50.	0.00	0.00	0.00	0.00	0.00	0.00

1

TABLE 1.2.9.5B=SERVICE II TOTAL (DC+DW+1.3(LL+I)) STRESS SUMMARY
****

SP NO	IN NO	D FROM L SUPT (ft)	YIELD STRESS Fy (ksi) TOP	YIELD STRESS Fy (ksi) BOT	TOTAL POSITIVE ,(ksi) CONCR. TOP	TOTAL POSITIVE ,(ksi) STEEL BEAM TOP	TOTAL POSITIVE ,(ksi) STEEL BEAM BOT	TOTAL NEGATIVE ,(ksi) CONCR. TOP	TOTAL NEGATIVE ,(ksi) STEEL BEAM TOP	TOTAL NEGATIVE ,(ksi) STEEL BEAM BOT
1	0	0.00	50.	50.	0.00	0.00	0.00	0.00	0.00	0.00
1	1	9.45	50.	50.	-0.24	-8.21	10.18	-0.02	-7.28	6.45
1	2	18.91	50.	50.	-0.46	-15.55	19.28	-0.03	-13.79	12.22
1	3	28.36	50.	50.	-0.65	-22.02	27.29	-0.05	-19.53	17.32
1	4	37.82	50.	50.	-0.81	-27.63	34.21	-0.06	-24.51	21.73
1	5	47.28	50.	50.	-0.88	-29.48	31.24	-0.07	-25.82	19.73
1	6	56.73	50.	50.	-0.98	-33.01	34.96	-0.07	-28.92	22.10
1	7	66.19	50.	50.	-1.06	-35.76	37.85	-0.08	-31.33	23.94
1	8	75.64	50.	50.	-1.12	-37.71	39.91	-0.09	-33.05	25.26

1	9	85.10	50.	50.	-1.15	-38.88	41.10	-0.09	-34.08	26.05
1	10	94.55	50.	50.	-1.16	-39.26	41.50	-0.09	-34.43	26.31
1	11	104.01	50.	50.	-1.15	-38.88	41.10	-0.09	-34.08	26.05
1	12	113.46	50.	50.	-1.12	-37.71	39.91	-0.09	-33.05	25.26
1	13	122.92	50.	50.	-1.06	-35.76	37.85	-0.08	-31.33	23.94
1	14	132.37	50.	50.	-0.98	-33.01	34.96	-0.07	-28.92	22.10
1	15	141.83	50.	50.	-0.88	-29.48	31.24	-0.07	-25.82	19.73
1	16	151.28	50.	50.	-0.81	-27.63	34.21	-0.06	-24.51	21.73
1	17	160.74	50.	50.	-0.65	-22.02	27.29	-0.05	-19.53	17.32
1	18	170.19	50.	50.	-0.46	-15.55	19.28	-0.03	-13.79	12.22
1	19	179.65	50.	50.	-0.24	-8.21	10.18	-0.02	-7.28	6.45
1	20	189.10	50.	50.	0.00	0.00	0.00	0.00	0.00	0.00

TABLE 1.2.9.5C=STRENGTH I TOTAL (1.25DC+1.50DW+1.75(LL+I)) STRESS SUMMARY
****

SP NO	IN NO	D FROM L SUPT (ft)	YIELD STRESS Fy (ksi) TOP	BOT	TOTAL POSITIVE ,(ksi) CONCR. TOP	STEEL BEAM TOP	STEEL BEAM BOT	TOTAL NEGATIVE ,(ksi) CONCR. TOP	STEEL BEAM TOP	STEEL BEAM BOT
1	0	0.00	50.	50.	0.00	0.00	0.00	0.00	0.00	0.00
1	1	9.45	50.	50.	-0.32	-10.35	13.08	-0.02	-9.09	8.06
1	2	18.91	50.	50.	-0.61	-19.60	24.77	-0.04	-17.23	15.28
1	3	28.36	50.	50.	-0.86	-27.76	35.07	-0.06	-24.41	21.65
1	4	37.82	50.	50.	-1.08	-34.83	43.97	-0.08	-30.63	27.16
1	5	47.28	50.	50.	-1.17	-37.21	40.15	-0.08	-32.28	24.66
1	6	56.73	50.	50.	-1.31	-41.66	44.93	-0.09	-36.15	27.62
1	7	66.19	50.	50.	-1.42	-45.12	48.65	-0.10	-39.16	29.93
1	8	75.64	50.	50.	-1.50	-47.59	51.29	-0.11	-41.31	31.57
1	9	85.10	50.	50.	-1.54	-49.06	52.82	-0.11	-42.61	32.56
1	10	94.55	50.	50.	-1.55	-49.55	53.34	-0.11	-43.04	32.89
1	11	104.01	50.	50.	-1.54	-49.06	52.82	-0.11	-42.61	32.56
1	12	113.46	50.	50.	-1.50	-47.59	51.29	-0.11	-41.31	31.57
1	13	122.92	50.	50.	-1.42	-45.12	48.65	-0.10	-39.16	29.93
1	14	132.37	50.	50.	-1.31	-41.66	44.93	-0.09	-36.15	27.62
1	15	141.83	50.	50.	-1.17	-37.21	40.15	-0.08	-32.28	24.66
1	16	151.28	50.	50.	-1.08	-34.83	43.97	-0.08	-30.63	27.16
1	17	160.74	50.	50.	-0.86	-27.76	35.07	-0.06	-24.41	21.65
1	18	170.19	50.	50.	-0.61	-19.60	24.77	-0.04	-17.23	15.28
1	19	179.65	50.	50.	-0.32	-10.35	13.08	-0.02	-9.09	8.06
1	20	189.10	50.	50.	0.00	0.00	0.00	0.00	0.00	0.00

TABLE 1.2.9.5D=STRENGTH I TOTAL (0.90DC+0.65DW+1.75(LL+I)) STRESS SUMMARY
****

SP NO	IN D NO	L FROM SUPT (ft)	YIELD STRESS Fy (ksi) TOP	BOT	TOTAL POSITIVE ,(ksi) CONCR. TOP	STEEL BEAM TOP	BOT	TOTAL NEGATIVE ,(ksi) CONCR. TOP	STEEL BEAM TOP	BOT
1	0	0.00	50.	50.	0.00	0.00	0.00	0.00	0.00	0.00
1	1	9.45	50.	50.	-0.32	-7.80	10.83	-0.02	-6.55	5.81
1	2	18.91	50.	50.	-0.60	-14.78	20.49	-0.03	-12.41	11.00
1	3	28.36	50.	50.	-0.85	-20.93	29.01	-0.04	-17.58	15.59
1	4	37.82	50.	50.	-1.06	-26.25	36.36	-0.06	-22.06	19.56
1	5	47.28	50.	50.	-1.15	-28.17	33.25	-0.06	-23.24	17.76
1	6	56.73	50.	50.	-1.29	-31.54	37.20	-0.07	-26.03	19.89
1	7	66.19	50.	50.	-1.39	-34.16	40.27	-0.07	-28.20	21.55
1	8	75.64	50.	50.	-1.47	-36.02	42.45	-0.08	-29.75	22.73
1	9	85.10	50.	50.	-1.51	-37.13	43.71	-0.08	-30.68	23.44
1	10	94.55	50.	50.	-1.52	-37.50	44.13	-0.08	-30.99	23.68
1	11	104.01	50.	50.	-1.51	-37.13	43.71	-0.08	-30.68	23.44
1	12	113.46	50.	50.	-1.47	-36.02	42.45	-0.08	-29.75	22.73
1	13	122.92	50.	50.	-1.39	-34.16	40.27	-0.07	-28.20	21.55
1	14	132.37	50.	50.	-1.29	-31.54	37.20	-0.07	-26.03	19.89
1	15	141.83	50.	50.	-1.15	-28.17	33.25	-0.06	-23.24	17.76
1	16	151.28	50.	50.	-1.06	-26.25	36.36	-0.06	-22.06	19.56
1	17	160.74	50.	50.	-0.85	-20.93	29.01	-0.04	-17.58	15.59
1	18	170.19	50.	50.	-0.60	-14.78	20.49	-0.03	-12.41	11.00
1	19	179.65	50.	50.	-0.32	-7.80	10.83	-0.02	-6.55	5.81
1	20	189.10	50.	50.	0.00	0.00	0.00	0.00	0.00	0.00

1

TABLE 1.2.9.5E=STRENGTH II TOTAL (1.25DC+1.50DW+1.35(LL+I)) STRESS SUMMARY
****

SP NO	IN D NO	L FROM SUPT (ft)	YIELD STRESS Fy (ksi) TOP	BOT	TOTAL POSITIVE ,(ksi) CONCR. TOP	STEEL BEAM TOP	BOT	TOTAL NEGATIVE ,(ksi) CONCR. TOP	STEEL BEAM TOP	BOT
1	0	0.00	50.	50.	0.00	0.00	0.00	0.00	0.00	0.00
1	1	9.45	50.	50.	-0.25	-10.06	11.94	-0.02	-9.09	8.06
1	2	18.91	50.	50.	-0.48	-19.06	22.60	-0.04	-17.23	15.28
1	3	28.36	50.	50.	-0.68	-27.00	32.00	-0.06	-24.41	21.65
1	4	37.82	50.	50.	-0.85	-33.87	40.13	-0.08	-30.63	27.16
1	5	47.28	50.	50.	-0.93	-36.08	36.61	-0.08	-32.28	24.66

1	6	56.73	50.	50.	-1.03	-40.40	40.98	-0.09	-36.15	27.62
1	7	66.19	50.	50.	-1.12	-43.76	44.37	-0.10	-39.16	29.93
1	8	75.64	50.	50.	-1.18	-46.16	46.78	-0.11	-41.31	31.57
1	9	85.10	50.	50.	-1.21	-47.58	48.19	-0.11	-42.61	32.56
1	10	94.55	50.	50.	-1.22	-48.06	48.66	-0.11	-43.04	32.89
1	11	104.01	50.	50.	-1.21	-47.58	48.19	-0.11	-42.61	32.56
1	12	113.46	50.	50.	-1.18	-46.16	46.78	-0.11	-41.31	31.57
1	13	122.92	50.	50.	-1.12	-43.76	44.37	-0.10	-39.16	29.93
1	14	132.37	50.	50.	-1.03	-40.40	40.98	-0.09	-36.15	27.62
1	15	141.83	50.	50.	-0.93	-36.08	36.61	-0.08	-32.28	24.66
1	16	151.28	50.	50.	-0.85	-33.87	40.13	-0.08	-30.63	27.16
1	17	160.74	50.	50.	-0.68	-27.00	32.00	-0.06	-24.41	21.65
1	18	170.19	50.	50.	-0.48	-19.06	22.60	-0.04	-17.23	15.28
1	19	179.65	50.	50.	-0.25	-10.06	11.94	-0.02	-9.09	8.06
1	20	189.10	50.	50.	0.00	0.00	0.00	0.00	0.00	0.00

1

TABLE 1.2.9.5F=STRENGTH II TOTAL (0.90DC+0.65DW+1.35(LL+I)) STRESS SUMMARY

****

SP NO	IN NO	D FROM L SUPT (ft)	YIELD STRESS Fy (ksi) TOP	BOT	TOTAL POSITIVE ,(ksi) CONCR. TOP	STEEL BEAM TOP	STEEL BEAM BOT	TOTAL NEGATIVE ,(ksi) CONCR. TOP	STEEL BEAM TOP	STEEL BEAM BOT
1	0	0.00	50.	50.	0.00	0.00	0.00	0.00	0.00	0.00
1	1	9.45	50.	50.	-0.25	-7.52	9.68	-0.02	-6.55	5.81
1	2	18.91	50.	50.	-0.47	-14.24	18.32	-0.03	-12.41	11.00
1	3	28.36	50.	50.	-0.66	-20.16	25.94	-0.04	-17.58	15.59
1	4	37.82	50.	50.	-0.83	-25.29	32.52	-0.06	-22.06	19.56
1	5	47.28	50.	50.	-0.90	-27.04	29.71	-0.06	-23.24	17.76
1	6	56.73	50.	50.	-1.01	-30.28	33.24	-0.07	-26.03	19.89
1	7	66.19	50.	50.	-1.09	-32.80	35.99	-0.07	-28.20	21.55
1	8	75.64	50.	50.	-1.15	-34.59	37.94	-0.08	-29.75	22.73
1	9	85.10	50.	50.	-1.18	-35.65	39.08	-0.08	-30.68	23.44
1	10	94.55	50.	50.	-1.19	-36.01	39.45	-0.08	-30.99	23.68
1	11	104.01	50.	50.	-1.18	-35.65	39.08	-0.08	-30.68	23.44
1	12	113.46	50.	50.	-1.15	-34.59	37.94	-0.08	-29.75	22.73
1	13	122.92	50.	50.	-1.09	-32.80	35.99	-0.07	-28.20	21.55
1	14	132.37	50.	50.	-1.01	-30.28	33.24	-0.07	-26.03	19.89
1	15	141.83	50.	50.	-0.90	-27.04	29.71	-0.06	-23.24	17.76
1	16	151.28	50.	50.	-0.83	-25.30	32.52	-0.06	-22.06	19.56
1	17	160.74	50.	50.	-0.66	-20.16	25.94	-0.04	-17.58	15.59
1	18	170.19	50.	50.	-0.47	-14.24	18.32	-0.03	-12.41	11.00
1	19	179.65	50.	50.	-0.25	-7.52	9.68	-0.02	-6.55	5.81
1	20	189.10	50.	50.	0.00	0.00	0.00	0.00	0.00	0.00

1

TABLE 1.2.10.1=STRESSES AT SECTION-CHANGE POINTS (UNFACTORED)
****

SP NO	JOINT TYPE	D FROM L SUPT (ft)	DL1, N=INF. MOM. (k-ft)	DL1, N=INF. STRESS (ksi)	DL2, N=21.0 MOM. (k-ft)	DL2, N=21.0 STRESS (ksi)	POS. LL+I MOM. (k-ft)	POS. LL+I STRESS (ksi)	NEG. LL+I MOM. (k-ft)	NEG. LL+I STRESS (ksi)	TOTAL STRESS --AND-- STRESS RANGE
1	LT	39.00	5669.	-24.1	562.	-1.0	3507.	-2.6	0.	0.0	-27.68
											2.61
	LB			20.5		1.7		9.7		0.0	31.89
											9.68
	RT			-21.6		-1.0		-2.6		0.0	-25.16
											2.61
	RB			15.9		1.4		7.6		0.0	24.85
											7.64
1	LT	150.10	5669.	-21.6	562.	-1.0	3507.	-2.6	0.	0.0	-25.16
											2.61
	LB			15.9		1.4		7.6		0.0	24.85
											7.64
	RT			-24.1		-1.0		-2.6		0.0	-27.68
											2.61
	RB			20.5		1.7		9.7		0.0	31.89
											9.68

NOTE: LT = left-hand-side point, top of top flange
LB = left-hand-side point, bottom of bottom flange
RT = right-hand-side point, top of top flange
RB = right-hand-side point, bottom of bottom flange

1

TABLE 1.2.22.3=MEMBER LENGTH AND SECTION GEOMETRY
****

MEMBER NO	LENGTH (ft)	STEEL TYPE	TOP FLANGE WIDTH (in)	TOP FLANGE THICK (in)	WEB DEPTH (in)	WEB THICK (in)	BOT FLANGE WIDTH (in)	BOT FLANGE THICK (in)	COVER PLATE -- (in) TOP WIDTH	COVER PLATE -- (in) TOP THICK	COVER PLATE -- (in) BOT WIDTH	COVER PLATE -- (in) BOT THICK
1	39.00	PG	24.0	1.1250	78.0	0.6250	29.0	1.2500				
2	111.10	PG	24.0	1.2500	78.0	0.6250	29.0	1.7500				
3	39.00	PG	24.0	1.1250	78.0	0.6250	29.0	1.2500				

NOTE: PG = plate Girder ,W = standard W-section with/without cover plates

1

TABLE 1.2.22.5 =DEPTH/THICKNESS RATIOS (N = n)
****

SP NO	IN NO	D L FROM SUPT	Lo ng [1]	Co mp	Web depth	Web thick	D/tw	[2]	2Dcp/tw [3]	2Dcp/tw [4]	2Dc/tw [5]	2Dc/tw [6]	Web Cat
1	0	0.00	0	1	78.00	0.625	124.8	150.0	0.00	90.55			0
1	1	9.45	0	1	78.00	0.625	124.8	150.0	0.00	90.55			0
1	2	18.91	0	1	78.00	0.625	124.8	150.0	0.00	90.55			0
1	3	28.36	0	1	78.00	0.625	124.8	150.0	0.00	90.55			0
1	4	37.82	0	1	78.00	0.625	124.8	150.0	0.00	90.55			0
1	5	47.28	0	1	78.00	0.625	124.8	150.0	8.71	90.55			0
1	6	56.73	0	1	78.00	0.625	124.8	150.0	8.71	90.55			0
1	7	66.19	0	1	78.00	0.625	124.8	150.0	8.71	90.55			0
1	8	75.64	0	1	78.00	0.625	124.8	150.0	8.71	90.55			0
1	9	85.10	0	1	78.00	0.625	124.8	150.0	8.71	90.55			0
1	10	94.55	0	1	78.00	0.625	124.8	150.0	8.71	90.55			0
1	11	104.01	0	1	78.00	0.625	124.8	150.0	8.71	90.55			0
1	12	113.46	0	1	78.00	0.625	124.8	150.0	8.71	90.55			0
1	13	122.92	0	1	78.00	0.625	124.8	150.0	8.71	90.55			0
1	14	132.37	0	1	78.00	0.625	124.8	150.0	8.71	90.55			0
1	15	141.83	0	1	78.00	0.625	124.8	150.0	8.71	90.55			0
1	16	151.28	0	1	78.00	0.625	124.8	150.0	0.00	90.55			0
1	17	160.74	0	1	78.00	0.625	124.8	150.0	0.00	90.55			0
1	18	170.19	0	1	78.00	0.625	124.8	150.0	0.00	90.55			0
1	19	179.65	0	1	78.00	0.625	124.8	150.0	0.00	90.55			0
1	20	189.10	0	1	78.00	0.625	124.8	150.0	0.00	90.55			0

NOTE:

[1] 0 - No long. stiffeners
1 - long. stiffeners

[2] D/tw limit (Eq. 6.10.2.1-1 or Eq. 6.10.2.1.2-1)

[3] For composite sections in positive flexure, use Article D6.3.2 to calculate Dcp and 2*Dcp/tw
Note: If the plastic N.A. is not in the web, Dcp = 0

[4] 2Dcp/tw limit: 3.76*SQRT(E/Fyc) (Eq.6.10.6.2.2-1)

[5] Use Article D6.3.1 to calculate Dc and 2.*Dc/tw

[6] 2Dc/tw limit: 5.7*SQRT(E/Fyc) (Eq.6.10.6.2.3-1)

Web Category
0 = compact section
2 = non-compact section
3 = slender section

TABLE 1.2.22.5A=DEPTH/THICKNESS RATIOS (N = inf.)
****

SP NO	IN NO	D FROM L SUPT	Lo ng [1]	Co mp	Web depth	Web thick	2Dc/tw [2]	2Dc/tw [3]	Web Category
1	0	0.00	0	1	78.00	0.625	135.32	137.27	2
1	1	9.45	0	1	78.00	0.625	135.32	137.27	2
1	2	18.91	0	1	78.00	0.625	135.32	137.27	2
1	3	28.36	0	1	78.00	0.625	135.32	137.27	2
1	4	37.82	0	1	78.00	0.625	135.32	137.27	2
1	5	47.28	0	1	78.00	0.625	145.43	137.27	3
1	6	56.73	0	1	78.00	0.625	145.43	137.27	3
1	7	66.19	0	1	78.00	0.625	145.43	137.27	3
1	8	75.64	0	1	78.00	0.625	145.43	137.27	3
1	9	85.10	0	1	78.00	0.625	145.43	137.27	3
1	10	94.55	0	1	78.00	0.625	145.43	137.27	3
1	11	104.01	0	1	78.00	0.625	145.43	137.27	3
1	12	113.46	0	1	78.00	0.625	145.43	137.27	3
1	13	122.92	0	1	78.00	0.625	145.43	137.27	3
1	14	132.37	0	1	78.00	0.625	145.43	137.27	3
1	15	141.83	0	1	78.00	0.625	145.43	137.27	3
1	16	151.28	0	1	78.00	0.625	135.32	137.27	2
1	17	160.74	0	1	78.00	0.625	135.32	137.27	2
1	18	170.19	0	1	78.00	0.625	135.32	137.27	2
1	19	179.65	0	1	78.00	0.625	135.32	137.27	2
1	20	189.10	0	1	78.00	0.625	135.32	137.27	2

NOTE:

[1] 0 - No long. stiffeners
1 - long. stiffeners

[2] For non-composite sections, calculate Dc and 2*Dc/tw

[3] 2Dc/tw limit: 5.7*SQRT(E/Fyc) (Eq.6.10.6.2.3-1)

Web Category
0 = compact section
2 = non-compact section
3 = slender section

TABLE 1.2.22.6=FLANGE PROPORTIONS CHECK

****

SP NO	D NO	FROM L SUPT (ft)	bf/2tf	[1]	bf (in)	[2] (in)	tf (in)	[3] (in)	Iyc/Iyt	FLAG
1	0	0.00	10.67	12.	24.0	13.0	1.125	0.688		
			11.60	12.	29.0	13.0	1.250	0.688	0.51	0
1	1	9.45	10.67	12.	24.0	13.0	1.125	0.688		
			11.60	12.	29.0	13.0	1.250	0.688	0.51	0
1	2	18.91	10.67	12.	24.0	13.0	1.125	0.688		
			11.60	12.	29.0	13.0	1.250	0.688	0.51	0
1	3	28.36	10.67	12.	24.0	13.0	1.125	0.688		
			11.60	12.	29.0	13.0	1.250	0.688	0.51	0
1	4	37.82	10.67	12.	24.0	13.0	1.125	0.688		
			11.60	12.	29.0	13.0	1.250	0.688	0.51	0
1	5	47.28	9.60	12.	24.0	13.0	1.250	0.688		
			8.29	12.	29.0	13.0	1.750	0.688	0.40	0
1	6	56.73	9.60	12.	24.0	13.0	1.250	0.688		
			8.29	12.	29.0	13.0	1.750	0.688	0.40	0
1	7	66.19	9.60	12.	24.0	13.0	1.250	0.688		
			8.29	12.	29.0	13.0	1.750	0.688	0.40	0
1	8	75.64	9.60	12.	24.0	13.0	1.250	0.688		
			8.29	12.	29.0	13.0	1.750	0.688	0.40	0
1	9	85.10	9.60	12.	24.0	13.0	1.250	0.688		
			8.29	12.	29.0	13.0	1.750	0.688	0.40	0
1	10	94.55	9.60	12.	24.0	13.0	1.250	0.688		
			8.29	12.	29.0	13.0	1.750	0.688	0.40	0
1	11	104.01	9.60	12.	24.0	13.0	1.250	0.688		
			8.29	12.	29.0	13.0	1.750	0.688	0.40	0
1	12	113.46	9.60	12.	24.0	13.0	1.250	0.688		
			8.29	12.	29.0	13.0	1.750	0.688	0.40	0
1	13	122.92	9.60	12.	24.0	13.0	1.250	0.688		
			8.29	12.	29.0	13.0	1.750	0.688	0.40	0
1	14	132.37	9.60	12.	24.0	13.0	1.250	0.688		
			8.29	12.	29.0	13.0	1.750	0.688	0.40	0
1	15	141.83	9.60	12.	24.0	13.0	1.250	0.688		
			8.29	12.	29.0	13.0	1.750	0.688	0.40	0
1	16	151.28	10.67	12.	24.0	13.0	1.125	0.688		
			11.60	12.	29.0	13.0	1.250	0.688	0.51	0
1	17	160.74	10.67	12.	24.0	13.0	1.125	0.688		
			11.60	12.	29.0	13.0	1.250	0.688	0.51	0
1	18	170.19	10.67	12.	24.0	13.0	1.125	0.688		
			11.60	12.	29.0	13.0	1.250	0.688	0.51	0
1	19	179.65	10.67	12.	24.0	13.0	1.125	0.688		
			11.60	12.	29.0	13.0	1.250	0.688	0.51	0
1	20	189.10	10.67	12.	24.0	13.0	1.125	0.688		
			11.60	12.	29.0	13.0	1.250	0.688	0.51	0

NOTE: [1] = 12. (Eq. 6.10.2.2-1)
[2] = D/6 (Eq. 6.10.2.2-2)
[3] = 1.1tw (Eq. 6.10.2.2-3)

For each nodal point, the 1st line checked criteria for top flange and the 2nd line checked criteria for bottom flange

1

BRIDGE ENGINEERING SOFTWARE & TECHNOLOGY CENTER
DEPARTMENT OF CIVIL & ENVIRON. ENGINEERING
UNIVERSITY OF MARYLAND

MERLIN V 9.0
COMPOSITE
LRF -- 2004
CODE CHECK

TABLE 1.2.22.7A=FLB AND LTB CATEGORIES
****

SP NO	IN NO	D FROM L SUPT (ft)	Co mp	FLB LMDAf	FLB LMDApf	FLB LMDArf	FLB CAT	LTB Lb (ft)	LTB Lp (ft)	LTB Lr (ft)	LTB CAT	GOV CAT
1	0	0.00	1	10.67	9.15	16.12	2	24.12	12.07	45.34	2	2
1	1	9.45	1	10.67	9.15	16.12	2	24.12	12.07	45.34	2	2
1	2	18.91	1	10.67	9.15	16.12	2	24.12	12.07	45.34	2	2
1	3	28.36	1	10.67	9.15	16.12	2	24.12	12.07	45.34	2	2
1	4	37.82	1	10.67	9.15	16.12	2	24.12	12.07	45.34	2	2
1	5	47.28	1	9.60	9.15	16.12	2	24.12	12.12	45.52	2	2
1	6	56.73	1	9.60	9.15	16.12	2	24.12	12.12	45.52	2	2
1	7	66.19	1	9.60	9.15	16.12	2	24.12	12.12	45.52	2	2
1	8	75.64	1	9.60	9.15	16.12	2	24.12	12.12	45.52	2	2
1	9	85.10	1	9.60	9.15	16.12	2	24.12	12.12	45.52	2	2
1	10	94.55	1	9.60	9.15	16.12	2	24.12	12.12	45.52	2	2
1	11	104.01	1	9.60	9.15	16.12	2	24.12	12.12	45.52	2	2
1	12	113.46	1	9.60	9.15	16.12	2	24.12	12.12	45.52	2	2
1	13	122.92	1	9.60	9.15	16.12	2	24.12	12.12	45.52	2	2
1	14	132.37	1	9.60	9.15	16.12	2	24.12	12.12	45.52	2	2
1	15	141.83	1	9.60	9.15	16.12	2	24.12	12.12	45.52	2	2
1	16	151.28	1	10.67	9.15	16.12	2	24.12	12.07	45.34	2	2
1	17	160.74	1	10.67	9.15	16.12	2	24.12	12.07	45.34	2	2
1	18	170.19	1	10.67	9.15	16.12	2	24.12	12.07	45.34	2	2
1	19	179.65	1	10.67	9.15	16.12	2	24.12	12.07	45.34	2	2
1	20	189.10	1	10.67	9.15	16.12	2	24.12	12.07	45.34	2	2

NOTE: LMDAf = slenderness ratio for the comp. flange
= bfc / 2tfc (Eq. 6.10.8.2.2-3)
LMDApf = limiting slenderness ratio for a compact flange
= 0.38*SQRT(E/Fyc) (Eq. 6.10.8.2.2-4)
LMDArf = limiting slenderness ration for a non-compct flange
= 0.56*SQRT(E/Fyr) (Eq. 6.10.8.2.2-5)
Lb = unbraced length
Lp = limiting unbraced length to achieve the nominal flexural of RbRhFyc under uniform bending
= 1.0rt*SQRT(E/Fyc) (Eq. 6.10.8.2.3-4)
Lr = limiting unbraced length to achieve the onset of nominal yielding in either flange under uniform bending with consideration of comp. flange residual stress effects
= pi * rt * SQRT(E/Fyr) (Eq. 6.10.8.2.3-5)

In negative moment region, the fist line is for non-composite sections
and the second line is for composite sections

Flange Category
0 = compact section
2 = non-compact section
3 = slender section

1

TABLE 1.2.22.7B=FLB AND LTB RESISTANCE
****

SP NO	IN NO	D L	FROM SUPT (ft)	Co mp	Rh	Rb	Cb	FLB Fnc (Ksi)	LTB Fnc (Ksi)	GOV Fnc (Ksi)
1	0		0.00	1	1.000	1.000	1.68	46.74	50.00	46.74
1	1		9.45	1	1.000	1.000	1.68	46.74	50.00	46.74
1	2		18.91	1	1.000	1.000	1.68	46.74	50.00	46.74
1	3		28.36	1	1.000	1.000	1.09	46.74	48.76	46.74
1	4		37.82	1	1.000	1.000	1.09	46.74	48.76	46.74
1	5		47.28	1	1.000	0.991	1.09	48.61	48.39	48.39
1	6		56.73	1	1.000	0.991	1.08	48.61	47.78	47.78
1	7		66.19	1	1.000	0.991	1.08	48.61	47.78	47.78
1	8		75.64	1	1.000	0.991	1.01	48.61	44.62	44.62
1	9		85.10	1	1.000	0.991	1.01	48.61	44.62	44.62
1	10		94.55	1	1.000	0.991	1.01	48.61	44.62	44.62
1	11		104.01	1	1.000	0.991	1.02	48.61	45.14	45.14
1	12		113.46	1	1.000	0.991	1.02	48.61	45.14	45.14
1	13		122.92	1	1.000	0.991	1.09	48.61	48.35	48.35
1	14		132.37	1	1.000	0.991	1.09	48.61	48.35	48.35
1	15		141.83	1	1.000	0.991	1.09	48.61	48.35	48.35
1	16		151.28	1	1.000	1.000	1.16	46.74	50.00	46.74
1	17		160.74	1	1.000	1.000	1.16	46.74	50.00	46.74
1	18		170.19	1	1.000	1.000	1.16	46.74	50.00	46.74
1	19		179.65	1	1.000	1.000	1.16	46.74	50.00	46.74
1	20		189.10	1	1.000	1.000	1.16	46.74	50.00	46.74

Note: In the positive moment region,the result is for DL case
In the negative moment region, the 1st line is for DL case
and the 2nd line is for LL case

1

TABLE 1.2.22.7C=INFOMATION FOR DUCTILITY CHECK

****

SP NO	IN NO	D L	FROM SUPT (ft)	Co mp	Dp (in)	0.42Dt (in)
1	0		0.00	1	11.83	38.32
1	1		9.45	1	11.83	38.32
1	2		18.91	1	11.83	38.32
1	3		28.36	1	11.83	38.32
1	4		37.82	1	11.83	38.32
1	5		47.28	1	14.72	38.53
1	6		56.73	1	14.72	38.53
1	7		66.19	1	14.72	38.53
1	8		75.64	1	14.72	38.53
1	9		85.10	1	14.72	38.53
1	10		94.55	1	14.72	38.53
1	11		104.01	1	14.72	38.53
1	12		113.46	1	14.72	38.53
1	13		122.92	1	14.72	38.53
1	14		132.37	1	14.72	38.53
1	15		141.83	1	14.72	38.53
1	16		151.28	1	11.83	38.32
1	17		160.74	1	11.83	38.32
1	18		170.19	1	11.83	38.32
1	19		179.65	1	11.83	38.32
1	20		189.10	1	11.83	38.32

1

TABLE 1.2.22.9=SUMMARY OF STRENGTH CATEGORY OF CROSS SECTION
****

SP NO	IN NO	D L	FROM SUPT (ft)	Section Region	STRENGTH CATEGORY, Noncomposite Web [1]	Noncomposite Flange [2]	Composite Web [3]	Composite Flange [4]	Category Non-Comp.	Category Comp.
1	0		0.00	1	2	2	0		2	0
1	1		9.45	1	2	2	0		2	0
1	2		18.91	1	2	2	0		2	0
1	3		28.36	1	2	2	0		2	0
1	4		37.82	1	2	2	0		2	0
1	5		47.28	1	3	2	0		3	0
1	6		56.73	1	3	2	0		3	0
1	7		66.19	1	3	2	0		3	0
1	8		75.64	1	3	2	0		3	0
1	9		85.10	1	3	2	0		3	0
1	10		94.55	1	3	2	0		3	0

1	11	104.01	1	3	2	0	3	0
1	12	113.46	1	3	2	0	3	0
1	13	122.92	1	3	2	0	3	0
1	14	132.37	1	3	2	0	3	0
1	15	141.83	1	3	2	0	3	0
1	16	151.28	1	2	2	0	2	0
1	17	160.74	1	2	2	0	2	0
1	18	170.19	1	2	2	0	2	0
1	19	179.65	1	2	2	0	2	0
1	20	189.10	1	2	2	0	2	0

Please read NOTE on the following page

1

NOTE: [1] For non-conposite sections, check Eq.6.10.6.2.3-1
[2] For non-composite FLB/LTB, use Article 6.10.8.2 to decide section category
[3] For composite sections in positive flexure, use Article 6.10.6.2.2 to decide section category
For composite sections in negative flexure, use Eq. 6.10.6.2.3-1
[4] For composite FLB or LTB, use Article 6.10.8.2 to compute section category

* Strength Category of Cross Section

0 = compact section

2 = non-compact section

3 = slender section

FOR N = INF. : Category No. is the maximum of [1] and [2]
FOR N = n : Category No. is [3] for composite sections in positive flexure
Category No. is the maximum of [3] and [4] for composite sections in negative flexure

Non-compact for Fy of the flanges > 70 ksi (483 MPa)

1

TABLE 1.2.22.10=CONSTRUCBILITY CHECK
****

SP	IN	D FROM (ft)	fl (ksi)	0.6Fyt (ksi)	fbu (ksi)	[1] (ksi)	fbu+fl (ksi)	[2] (ksi)	fbu+1/3fl (ksi)	[3] (ksi)	FLAG

1	0	0.00	0.0	30.0	0.0	50.0	0.0	50.0	0.0	46.7	0
			0.0	-	0.0	-	0.0	50.0	-	-	0
1	1	9.45	0.0	30.0	8.7	50.0	8.7	50.0	8.7	46.7	0
			0.0	-	7.4	-	7.4	50.0	-	-	0
1	2	18.91	0.0	30.0	16.6	50.0	16.6	50.0	16.6	46.7	0
			0.0	-	14.1	-	14.1	50.0	-	-	0
1	3	28.36	0.0	30.0	23.5	50.0	23.5	50.0	23.5	46.7	0
			0.0	-	20.0	-	20.0	50.0	-	-	0
1	4	37.82	0.0	30.0	29.5	50.0	29.5	50.0	29.5	46.7	0
			0.0	-	25.1	-	25.1	50.0	-	-	0
1	5	47.28	0.0	30.0	31.0	44.4	31.0	50.0	31.0	48.4	0
			0.0	-	22.7	-	22.7	50.0	-	-	0
1	6	56.73	0.0	30.0	34.7	44.4	34.7	50.0	34.7	47.8	0
			0.0	-	25.5	-	25.5	50.0	-	-	0
1	7	66.19	0.0	30.0	37.6	44.4	37.6	50.0	37.6	47.8	0
			0.0	-	27.6	-	27.6	50.0	-	-	0
1	8	75.64	0.0	30.0	39.6	44.4	39.6	50.0	39.6	44.6	0
			0.0	-	29.1	-	29.1	50.0	-	-	0
1	9	85.10	0.0	30.0	40.9	44.4	40.9	50.0	40.9	44.6	0
			0.0	-	30.0	-	30.0	50.0	-	-	0
1	10	94.55	0.0	30.0	41.3	44.4	41.3	50.0	41.3	44.6	0
			0.0	-	30.3	-	30.3	50.0	-	-	0
1	11	104.01	0.0	30.0	40.9	44.4	40.9	50.0	40.9	45.1	0
			0.0	-	30.0	-	30.0	50.0	-	-	0
1	12	113.46	0.0	30.0	39.6	44.4	39.6	50.0	39.6	45.1	0
			0.0	-	29.1	-	29.1	50.0	-	-	0
1	13	122.92	0.0	30.0	37.6	44.4	37.6	50.0	37.6	48.3	0
			0.0	-	27.6	-	27.6	50.0	-	-	0
1	14	132.37	0.0	30.0	34.7	44.4	34.7	50.0	34.7	48.3	0
			0.0	-	25.5	-	25.5	50.0	-	-	0
1	15	141.83	0.0	30.0	31.0	44.4	31.0	50.0	31.0	48.3	0
			0.0	-	22.7	-	22.7	50.0	-	-	0
1	16	151.28	0.0	30.0	29.5	50.0	29.5	50.0	29.5	46.7	0
			0.0	-	25.1	-	25.1	50.0	-	-	0
1	17	160.74	0.0	30.0	23.5	50.0	23.5	50.0	23.5	46.7	0
			0.0	-	20.0	-	20.0	50.0	-	-	0
1	18	170.19	0.0	30.0	16.6	50.0	16.6	50.0	16.6	46.7	0
			0.0	-	14.1	-	14.1	50.0	-	-	0
1	19	179.65	0.0	30.0	8.7	50.0	8.7	50.0	8.7	46.7	0
			0.0	-	7.4	-	7.4	50.0	-	-	0
1	20	189.10	0.0	30.0	0.0	50.0	0.0	50.0	0.0	46.7	0
			0.0	-	0.0	-	0.0	50.0	-	-	0

NOTE: [1] = (PHI)f * Fcrw (Eq. 6.10.3.2.1-3)
[2] = (PHI)f * Rh * Fyc (Eq. 6.10.3.2.1-1) or
= (PHI)f * Rh * Fyt (Eq. 6.10.3.2.2-1)
[3] = (PHI)f * Fnc (Eq. 6.10.3.2.1-2)

"-" is N.A.

Under FLAG Column, 0 = OK; 1= NG

For each nodal point, the 1st line checked criteria for top flange and the 2nd line checked criteria for bottom flange

The values of fbu and fl shall be determined based on factored loads, and shall be taken as positive in sign in all resistance equations (Art. 6.10.1.6)

The value of fbu is the actual stress in this table, the users can use the maximum value within the unbraced length to do their own check

1

TABLE 1.2.22.14=STRENGTH LIMIT STATE CHECK
****

SP NO	IN NO	D L	FROM SUPT (ft)	ID	Mu+1/3flSxt (k-ft)	[1] (k-ft)	fbu (ksi)	[2] (ksi)	fl (ksi)	[3] (ksi)	fbu+ 1/3fl (ksi)	[4] (ksi)	FLAG MCTD
1	0		0.00	0	0.0	21665.7	-	-	0.0	30.0	-	-	0--0
1	1		9.45	0	4059.2	21665.7	-	-	0.0	30.0	-	-	0--0
1	2		18.91	0	7685.0	21665.7	-	-	0.0	30.0	-	-	0--0
1	3		28.36	0	10877.2	21665.7	-	-	0.0	30.0	-	-	0--0
1	4		37.82	0	13635.9	21665.7	-	-	0.0	30.0	-	-	0--0
1	5		47.28	0	15956.3	25809.8	-	-	0.0	30.0	-	-	0--0
1	6		56.73	0	17852.9	25809.8	-	-	0.0	30.0	-	-	0--0
1	7		66.19	0	19328.3	25809.8	-	-	0.0	30.0	-	-	0--0
1	8		75.64	0	20375.2	25809.8	-	-	0.0	30.0	-	-	0--0
1	9		85.10	0	20981.2	25809.8	-	-	0.0	30.0	-	-	0--0
1	10		94.55	0	21183.2	25809.8	-	-	0.0	30.0	-	-	0--0
1	11		104.01	0	20981.2	25809.8	-	-	0.0	30.0	-	-	0--0
1	12		113.46	0	20375.2	25809.8	-	-	0.0	30.0	-	-	0--0
1	13		122.92	0	19328.3	25809.8	-	-	0.0	30.0	-	-	0--0
1	14		132.37	0	17852.9	25809.8	-	-	0.0	30.0	-	-	0--0
1	15		141.83	0	15956.3	25809.8	-	-	0.0	30.0	-	-	0--0
1	16		151.28	0	13636.0	21665.7	-	-	0.0	30.0	-	-	0--0
1	17		160.74	0	10877.2	21665.7	-	-	0.0	30.0	-	-	0--0
1	18		170.19	0	7685.0	21665.7	-	-	0.0	30.0	-	-	0--0
1	19		179.65	0	4059.3	21665.7	-	-	0.0	30.0	-	-	0--0
1	20		189.10	0	0.0	21665.7	-	-	0.0	30.0	-	-	0--0

NOTE: [1] = (PHI)f * Mn (Eq. 6.10.7.1.1-1)
[2] = (PHI)f * Fnc for comp. flange of composite sections in positive flexure (Eq. 6.10.7.2.1-1)
= (PHI)f * Rh * Fyt for tension flange of composite sections in negative flexure and non-composite sections (Eq. 6.10.7.2.1-2)
[3] = 0.6*Fyt for composite sections in positive flexure or tension flange for composite sections in negative flexure and non-composite sections (Eq. 6.10.1.6-1)

= 0.6*Fyc for comp. flange of composite sections in negative flexure and non-composite sections (Eq. 6.10.1.6-1)

[4] = (PHI)f * Fnt for non-compact tension flange of composite sections in positive flexure (Eq. 6.10.8.1.2-1)

= (PHI)f * Fnc for comp. flange of composite sections in negative flexure and non-composite sections (Eq. 6.10.8.1.1-1)

"-" is N.A.

Under FLAG Column, 0 = OK; 1= NG
M = Moment; C = Comp. Flange; T = Tension Flange
D = Ductility

For negative moment region or non-compact sections in positive moment region, the 1st line is for top flange and the 2nd line is for bottom flange

The values of fbu, Mu and fl shall be determined based on factored loads, and shall be taken as positive in sign in all resistance equations (Art. 6.10.1.6)

The value of fbu is the actual stress in this table, the users can use the maximum value within the unbraced length to do their own check

1

TABLE 1.2.22.15=UNSTIFFENED SECTION SHEAR CAPACITY
****

SP NO	IN NO	D FROM L SUPT (ft)	Fy (ksi)	k [1]	Art.6.10.9.2 [2]	[3]	D/tw	C [4]	Vp (ksi)	SHEAR CAPACITY -Eq.6.10.9.2-- Vn = C x Vp
1	0	0.00	50.0	5.0	60.3	75.4	124.8	0.292	1413.8	413.3
1	1	9.45	50.0	5.0	60.3	75.4	124.8	0.292	1413.8	413.3
1	2	18.91	50.0	5.0	60.3	75.4	124.8	0.292	1413.8	413.3
1	3	28.36	50.0	5.0	60.3	75.4	124.8	0.292	1413.8	413.3
1	4	37.82	50.0	5.0	60.3	75.4	124.8	0.292	1413.8	413.3
1	5	47.28	50.0	5.0	60.3	75.4	124.8	0.292	1413.8	413.3
1	6	56.73	50.0	5.0	60.3	75.4	124.8	0.292	1413.8	413.3
1	7	66.19	50.0	5.0	60.3	75.4	124.8	0.292	1413.8	413.3
1	8	75.64	50.0	5.0	60.3	75.4	124.8	0.292	1413.8	413.3
1	9	85.10	50.0	5.0	60.3	75.4	124.8	0.292	1413.8	413.3
1	10	94.55	50.0	5.0	60.3	75.4	124.8	0.292	1413.8	413.3
1	11	104.01	50.0	5.0	60.3	75.4	124.8	0.292	1413.8	413.3
1	12	113.46	50.0	5.0	60.3	75.4	124.8	0.292	1413.8	413.3
1	13	122.92	50.0	5.0	60.3	75.4	124.8	0.292	1413.8	413.3
1	14	132.37	50.0	5.0	60.3	75.4	124.8	0.292	1413.8	413.3
1	15	141.83	50.0	5.0	60.3	75.4	124.8	0.292	1413.8	413.3
1	16	151.28	50.0	5.0	60.3	75.4	124.8	0.292	1413.8	413.3
1	17	160.74	50.0	5.0	60.3	75.4	124.8	0.292	1413.8	413.3
1	18	170.19	50.0	5.0	60.3	75.4	124.8	0.292	1413.8	413.3

```
 1 19 179.65  50.0  5.0    60.3   75.4 124.8  0.292  1413.8     413.3
 1 20 189.10  50.0  5.0    60.3   75.4 124.8  0.292  1413.8     413.3


 ---------------------------------------------------------------------------
 Please read NOTE on the following page
1
              BRIDGE ENGINEERING SOFTWARE & TECHNOLOGY CENTER        MERLIN V 9.0
                DEPARTMENT OF CIVIL & ENVIRON. ENGINEERING           COMPOSITE
                          UNIVERSITY OF MARYLAND                     LRF -- 2004
                                                                     CODE CHECK
                                                                     PAGE  61

     NOTE: [1] k= buckling coefficient = 5+5/((d0/D)**2)
                 = 5 for unstiffened beams and girders
                 = 5 for stiffened girders when (d0/D) > 3, or
                                                (d0/D) > (260/(D/tw))**2

           [2] = 1.12 * sqrt(Ek / Fyw)

           [3] = 1.40 * sqrt(Ek / Fyw)

           [4] C = ratio of nominal shear resistance and plastic shear force, Vp

              For D/tw < [2], C = 1.0

              For [2] <= D/tw <= [3], C = 1.12 * sqrt(Ek / Fyw) / (D/tw)
                                      ..... AASHTO LRFD Eq.6.10.9.3.2-6

              For D/tw > [3], C = 1.57 * (Ek / Fyw) / (D/tw)^2
                                      ..... AASHTO LRFD Eq.6.10.9.3.2-7


          ** AASHTO LRFD Art.6.10.9.1 --- For interior web panels considered
             stiffened
             if (d0/D) < 3 without long. stiffener, or
             if (d0/D) > 3 with both transv. and long. stiffeners.
             For handling requirement, (d0/D) > (260/(D/tw))**2

                  Vu = CVp

             where D = clear, unsupported distance between flange components

                  d0 = distance between transverse stiffeners

          ** This Article (6.10.9.2) indicates that a designer cannot
             count on post-buckling shear resistance from tension-
             field action for an unstiffened girder.
1
             BRIDGE ENGINEERING SOFTWARE & TECHNOLOGY CENTER        MERLIN V 9.0
               DEPARTMENT OF CIVIL & ENVIRON. ENGINEERING           COMPOSITE
                          UNIVERSITY OF MARYLAND                     LRF -- 2004
                                                                     CODE CHECK
                                                                     PAGE  62
     TABLE 1.2.22.16=SUMMARY OF WEB STRENGTH CATEGORY
                    ********************************
```

S T R E N G T H C A T E G O R Y; SEE NOTE

SP NO	IN NO	D FROM L SUPT (ft)	WEB STABILITY UNSTIFFENED,[1] ---- D/tw -----	LFD/LRFD MAX. SHEAR (kip)	<=>	UNSTIFFENED SHEAR CAPA-CITY, [2]	CATEGORY	OVERALL WEB
1	0	0.00	2	529.7	>	413.3	4	4
1	1	9.45	2	478.2	>	413.3	4	4
1	2	18.91	2	430.3	>	413.3	4	4
1	3	28.36	2	387.4	<	413.3	2	2
1	4	37.82	2	345.1	<	413.3	2	2
1	5	47.28	3	303.2	<	413.3	3	3
1	6	56.73	3	262.0	<	413.3	3	3
1	7	66.19	3	221.2	<	413.3	3	3
1	8	75.64	3	181.0	<	413.3	3	3
1	9	85.10	3	141.3	<	413.3	3	3
1	10	94.55	3	102.1	<	413.3	3	3
1	11	104.01	3	141.3	<	413.3	3	3
1	12	113.46	3	181.0	<	413.3	3	3
1	13	122.92	3	221.2	<	413.3	3	3
1	14	132.37	3	262.0	<	413.3	3	3
1	15	141.83	3	303.2	<	413.3	3	3
1	16	151.28	2	345.1	<	413.3	2	2
1	17	160.74	2	387.4	<	413.3	2	2
1	18	170.19	2	430.3	>	413.3	4	4
1	19	179.65	2	478.2	>	413.3	4	4
1	20	189.10	2	529.7	>	413.3	4	4

Please read NOTE on the following page

1

NOTE [1]: WEB STABILITY, D/tw ratio ..... buckling consideration

For compact section (composite sections in positive flexure)

w/o long. stiff.

D/tw <= 150 (Eq. 6.10.2.1.1-1)

w / long. stiff.

D/tw <= 300 (Eq. 6.10.2.1.2-1)

2Dcp/tw .LE. 3.76*sqrt(E/Fyc) ..... AASHTO Eq.6.10.6.2.2-1

For compact or non-compact sections specified in Art. 6.10.8

(composite sections in negative flexure and
non-composite sections)

2Dc/tw .LE. 5.7*SQRT(E/Fyc) ..... AASHTO Eq.6.10.6.2.3-1

[2]: SHEAR CAPACITY ... web crippling control

Vn = CVp ..... AASHTO Eq.6.10.9.2-1

Vn = VpRc ..... AASHTO Eq.6.10.9.3.2-8

Rc = C+[0.87(1-C)]/sqrt(1+(d0/D)**2)

Vp = 0.58*Fy*D*tw ..... AASHTO Eq.6.10.9.3.3-2

* For the detailed description of shear capacity, please refer to AASHTO Art.6.10.9.2 and .3

* STRENGTH CATEGORY; 0 = compact section
2 = braced non-compact section
4 = transversely stiffened web
5 = transversely and longitudinally stiffened web
6 = D/tw out of AASHTO Spec.

1

TABLE 1.2.22.17=TRANSVERSE STIFFENER SPACING
****

SP NO	IN NO	D FROM L SUPT (ft)	YIELD STRESS Fy (ksi)	LFD/LRFD MAXIMUM SHEAR (k)	UNSTIFFENED SHEAR CAPACITY (k)	REQUIREMENT OF TRANS. STIFFENERS 1=YES , 0=NO	MAX. ALLOWABLE TRANS. STIFFENERS SPACING (ft-in)
1	0	0.00	50.	529.65	413.28	1	9 - 9
1	1	9.45	50.	478.19	413.28	1	19 - 6
1	2	18.91	50.	430.27	413.28	1	19 - 6
1	3	28.36	50.	387.40	413.28	0	
1	4	37.82	50.	345.06	413.28	0	
1	5	47.28	50.	303.24	413.28	0	
1	6	56.73	50.	261.96	413.28	0	
1	7	66.19	50.	221.21	413.28	0	
1	8	75.64	50.	180.99	413.28	0	
1	9	85.10	50.	141.30	413.28	0	
1	10	94.55	50.	102.14	413.28	0	
1	11	104.01	50.	141.30	413.28	0	
1	12	113.46	50.	180.99	413.28	0	
1	13	122.92	50.	221.21	413.28	0	
1	14	132.37	50.	261.96	413.28	0	
1	15	141.83	50.	303.24	413.28	0	
1	16	151.28	50.	345.06	413.28	0	
1	17	160.74	50.	387.40	413.28	0	
1	18	170.19	50.	430.27	413.28	1	19 - 6

1	19	179.65	50.	478.19	413.28	1	19 - 6
1	20	189.10	50.	529.65	413.28	1	9 - 9

1

TABLE 1.2.22.18=STATUS OF TRANSVERSE STIFFENERS
****

SP NO	IN D NO	FROM L SUPT (ft)	YIELD STRESS BEAM (ksi)	YIELD STRESS TRANS. STIFF.	SPACING,(ft-in) FROM INPUT	<=>	SPACING,(ft-in) MAXIMUM ALLOWABLE	STATUS SEE NOTE
1	0	0.00	50.	36.	7- 0	<	9- 9	
1	1	9.45	50.	36.	14- 0	<	19- 6	
1	2	18.91	50.	36.	14- 0	<	19- 6	
1	3	28.36	50.					
1	4	37.82	50.					
1	5	47.28	50.					
1	6	56.73	50.					
1	7	66.19	50.					
1	8	75.64	50.					
1	9	85.10	50.					
1	10	94.55	50.					
1	11	104.01	50.					
1	12	113.46	50.					
1	13	122.92	50.					
1	14	132.37	50.					
1	15	141.83	50.					
1	16	151.28	50.					
1	17	160.74	50.					
1	18	170.19	50.	36.	14- 0	<	19- 6	
1	19	179.65	50.	36.	14- 0	<	19- 6	
1	20	189.10	50.	36.	7- 0	<	9- 9	

** NOTE [1] : STATUS

BLANK = Acceptable trans. stiff. spacing
<= = Trans. stiff. spacing violated
** = Trans. stiff. is redundent

1

TABLE 1.2.22.19=SHEAR CAPACITY CHECK
****

SP NO	IN NO	D L FROM SUPT (ft)	WEB D/T	RB	YIELD SHEAR Vp (k)	TRANS. STIFF. SPACING (ft-in)	CC	LRFD MAXIMUM SHEAR (k)	<=>	SHEAR CAPACITY Vu (k) Eq.6.10.7.3.3a-1,2	STATUS
1	0	0.00	125.	1.0000	1414.	7- 0	0.544	529.65	<	769.62	
1	1	9.45	125.	1.0000	1414.	14- 0	0.592	478.19	<	836.27	
1	2	18.91	125.	1.0000	1414.	14- 0	0.592	430.27	<	836.27	
1	3	28.36	125.	1.0000	1414.		0.292	387.40	<	413.28	
1	4	37.82	125.	1.0000	1414.		0.292	345.06	<	413.28	
1	5	47.28	125.	1.0000	1414.		0.292	303.24	<	413.28	
1	6	56.73	125.	1.0000	1414.		0.292	261.96	<	413.28	
1	7	66.19	125.	1.0000	1414.		0.292	221.21	<	413.28	
1	8	75.64	125.	1.0000	1414.		0.292	180.99	<	413.28	
1	9	85.10	125.	1.0000	1414.		0.292	141.30	<	413.28	
1	10	94.55	125.	1.0000	1414.		0.292	102.14	<	413.28	
1	11	104.01	125.	1.0000	1414.		0.292	141.30	<	413.28	
1	12	113.46	125.	1.0000	1414.		0.292	180.99	<	413.28	
1	13	122.92	125.	1.0000	1414.		0.292	221.21	<	413.28	
1	14	132.37	125.	1.0000	1414.		0.292	261.96	<	413.28	
1	15	141.83	125.	1.0000	1414.		0.292	303.24	<	413.28	
1	16	151.28	125.	1.0000	1414.		0.292	345.06	<	413.28	
1	17	160.74	125.	1.0000	1414.		0.292	387.40	<	413.28	
1	18	170.19	125.	1.0000	1414.	14- 0	0.592	430.27	<	836.27	
1	19	179.65	125.	1.0000	1414.	14- 0	0.592	478.19	<	836.27	
1	20	189.10	125.	1.0000	1414.	7- 0	0.544	529.65	<	769.62	

NOTE: Assumed that all the supports have stiffeners

STATUS: (1) --- blank: shear capacity is ok
(2) --- <= : insufficient shear capacity
(3) --- Vu=CC*R*Vp; R see AASHTO LRFD 6.10.7.3.3a or 3b or Table .22.15

CC includes post-buckling strength due to tension field action

1

TABLE 1.2.22.20=SECTION PROPERTY CHECK OF TRANSVERSE STIFFENERS
****

SP NO	IN NO	D L FROM SUPT (ft)	MIN. [1] WIDTH (in) AASHTO Eq.6.10.8.1.2-1,2 MIN.	<=>	ACTUAL	<=>	MAX.	I,[3],(in**4) Eq.6.10.8.1.3-1 ACTUAL	<=>	REQ'D	A,[4],(in**2) Eq.6.10.8.1.4-1 ACTUAL	<=>	REQ'D	FL AG
1	0	0.00	6.00	<	9.50	<	16.00	314.92	>	10.25	9.50	>	-2.12	
1	1	9.45	6.00	<	7.00	<	8.00	65.16	>	20.51	3.50	>	-0.78	
1	2	18.91	6.00	<	7.00	<	8.00	65.16	>	20.51	3.50	>	-1.68	
1	3	28.36												
1	4	37.82												

```
 1  5  47.28
 1  6  56.73
 1  7  66.19
 1  8  75.64
 1  9  85.10
 1 10  94.55
 1 11 104.01
 1 12 113.46
 1 13 122.92
 1 14 132.37
 1 15 141.83
 1 16 151.28
 1 17 160.74
 1 18 170.19   6.00 <     7.00 <     8.00   65.16  >  20.51  3.50  >  -1.68
 1 19 179.65   6.00 <     7.00 <     8.00   65.16  >  20.51  3.50  >  -0.78
 1 20 189.10   6.00 <     9.50 <    16.00  314.92  >  10.25  9.50  >  -2.12

 ------------------------------------------------------------------------------
 Please read NOTE on the following page
1
              BRIDGE ENGINEERING SOFTWARE & TECHNOLOGY CENTER        MERLIN V 9.0
                DEPARTMENT OF CIVIL & ENVIRON. ENGINEERING           COMPOSITE
                          UNIVERSITY OF MARYLAND                     LRF -- 2004
                                                                     CODE CHECK
                                                                     PAGE  68

 ** NOTE [1 or 2]: Minimum width of transverse stiffeners
              AASHTO LRFD Eq.6.10.8.1.2-1 or -2

         [3]: required moment of inertia for trans. stiff.
              AASHTO LRFD Eq.6.10.8.1.3-1

         [4]: required gross area of trans. stiff.
              AASHTO LRFD Eq.6.10.8.1.3-2

              * Minus area indicates that stiffener area is
               not governing factor for the relatively web thickness

         FLAG : (1) --- BLANK : acceptable trans. stiff.
                (2) ---  <=   : trans. stiff. violates AASHTO requirement(s)

1
              BRIDGE ENGINEERING SOFTWARE & TECHNOLOGY CENTER        MERLIN V 9.0
                DEPARTMENT OF CIVIL & ENVIRON. ENGINEERING           COMPOSITE
                          UNIVERSITY OF MARYLAND                     LRF -- 2004
                                                                     CODE CHECK
                                                                     PAGE  69
    TABLE 1.2.22.20A=REQ. SECTION PROPERTIES FOR TRANS. STIFFENERS.
                      ***********************************************

                      WEB          Do       ASSUMED   J      REQ'D I
    SP IN D FROM ------------ -(ft-in)- -------- ------ -(in**4)-
    NO NO L SUPT DEPTH THICK.  ASSUMED   B    Y   AASHTO  AASHTO
           (ft)     (in)       SPACING            6.10.8.1.3-1,2
    ------------------------------------------------------------------------
```

1	0	0.00	78.0	0.6250	7- 0	2.4	1.4	0.5	10.3
1	1	9.45	78.0	0.6250	14- 0	2.4	1.4	0.5	20.5
1	2	18.91	78.0	0.6250	14- 0	2.4	1.4	0.5	20.5
1	3	28.36	78.0	0.6250	0- 0	2.4	1.0	0.0	0.0
1	4	37.82	78.0	0.6250	0- 0	2.4	1.0	0.0	0.0
1	5	47.28	78.0	0.6250	0- 0	2.4	1.0	0.0	0.0
1	6	56.73	78.0	0.6250	0- 0	2.4	1.0	0.0	0.0
1	7	66.19	78.0	0.6250	0- 0	2.4	1.0	0.0	0.0
1	8	75.64	78.0	0.6250	0- 0	2.4	1.0	0.0	0.0
1	9	85.10	78.0	0.6250	0- 0	2.4	1.0	0.0	0.0
1	10	94.55	78.0	0.6250	0- 0	2.4	1.0	0.0	0.0
1	11	104.01	78.0	0.6250	0- 0	2.4	1.0	0.0	0.0
1	12	113.46	78.0	0.6250	0- 0	2.4	1.0	0.0	0.0
1	13	122.92	78.0	0.6250	0- 0	2.4	1.0	0.0	0.0
1	14	132.37	78.0	0.6250	0- 0	2.4	1.0	0.0	0.0
1	15	141.83	78.0	0.6250	0- 0	2.4	1.0	0.0	0.0
1	16	151.28	78.0	0.6250	0- 0	2.4	1.0	0.0	0.0
1	17	160.74	78.0	0.6250	0- 0	2.4	1.0	0.0	0.0
1	18	170.19	78.0	0.6250	14- 0	2.4	1.4	0.5	20.5
1	19	179.65	78.0	0.6250	14- 0	2.4	1.4	0.5	20.5
1	20	189.10	78.0	0.6250	7- 0	2.4	1.4	0.5	10.3

1

TABLE 1.2.22.21=SERVICE LIMIT STATE CHECK
****

SP NO	IN D NO	FROM L SUPT (ft)	TOP FLANGE ff (ksi)	TOP FLANGE ff+fl/2 (ksi)	[1] (ksi)	BOT. FLANGE ff+fl/2 (ksi)	[2] (ksi)	COMP. FLG fc (ksi)	fcrw [3] (ksi)	FLAG TBC
1	0	0.00	0.0	-	47.5	0.0	47.5	-	-	00-
1	1	9.45	8.2	-	47.5	10.2	47.5	-	-	00-
1	2	18.91	15.5	-	47.5	19.3	47.5	-	-	00-
1	3	28.36	22.0	-	47.5	27.3	47.5	-	-	00-
1	4	37.82	27.6	-	47.5	34.2	47.5	-	-	00-
1	5	47.28	29.5	-	47.5	31.2	47.5	-	-	00-
1	6	56.73	33.0	-	47.5	35.0	47.5	-	-	00-
1	7	66.19	35.8	-	47.5	37.9	47.5	-	-	00-
1	8	75.64	37.7	-	47.5	39.9	47.5	-	-	00-
1	9	85.10	38.9	-	47.5	41.1	47.5	-	-	00-
1	10	94.55	39.3	-	47.5	41.5	47.5	-	-	00-
1	11	104.01	38.9	-	47.5	41.1	47.5	-	-	00-
1	12	113.46	37.7	-	47.5	39.9	47.5	-	-	00-
1	13	122.92	35.8	-	47.5	37.9	47.5	-	-	00-
1	14	132.37	33.0	-	47.5	35.0	47.5	-	-	00-
1	15	141.83	29.5	-	47.5	31.2	47.5	-	-	00-
1	16	151.28	27.6	-	47.5	34.2	47.5	-	-	00-
1	17	160.74	22.0	-	47.5	27.3	47.5	-	-	00-

1	18	170.19	15.5	-	47.5	19.3	47.5	-	-	00-
1	19	179.65	8.2	-	47.5	10.2	47.5	-	-	00-
1	20	189.10	0.0	-	47.5	0.0	47.5	-	-	00-

1

NOTE: [1] = 0.95RhFyf for composite sections (Eq. 6.10.4.2.2-1)
= 0.80RhFyf for non-composite sections (Eq. 6.10.4.2.2-3)
[2] = 0.95RhFyf for composite sections (Eq. 6.10.4.2.2-2)
= 0.80RhFyf for non-composite sections (Eq. 6.10.4.2.2-3)
[3] = 0.9Ek / (D/tw)^2 (Eq. 6.10.1.9.1-1)
but not to exceed the smaller of RhFyc and Fyw/0.7
k = bending-buckling coefficient
= 9 / (Dc/D)^2 (Eq. 6.10.1.9.1-2)
where:
Dc = depth of the web in compression in the elastic range. For composite sections, Dc shall be determined as specified in Article D6.3.1

"-" is N.A.

Flag check - 0 = OK; 1 = NG
T = Top Flange; B = Bottom Flange; C = Comp. Flange

The values of fl shall be determined based on factored loads, and shall be taken as positive in sign in all resistance equations (Art. 6.10.1.6)

1

1

TABLE 1.2.22.23A=FATIGUE STRESS RANGE FOR TRUCK (UNFACTORED)
****

(1) Main (Longitudinal) Load Carrying Members

(2) Road Type = I --- Rural Interstate

	TOP OF TOP FLANGE		BOTTOM OF BOTTOM FLANGE	
SP IN D FROM	GOVERN. STRESS	ACCEPTABLE	GOVERN. STRESS	ACCEPTABLE

NO	NO	L SUPT (ft)	LOADING	RANGE (ksi)	STRESS CATEGORY	LOADING	RANGE (ksi)	STRESS CATEGORY
1	0	0.00		0.0	A B B^C^C D E E^	TR	0.0	A B B^C^C D E E^
1	1	9.45		0.0	A B B^C^C D E E^	TR	0.0	A B B^C^C D E E^
1	2	18.91		0.0	A B B^C^C D E E^	TR	0.0	A B B^C^C D E E^
1	3	28.36		0.0	A B B^C^C D E E^	TR	0.0	A B B^C^C D E E^
1	4	37.82		0.0	A B B^C^C D E E^	TR	0.0	A B B^C^C D E E^
1		39.00	SCG					
1	5	47.28		0.0	A B B^C^C D E E^	TR	0.0	A B B^C^C D E E^
1	6	56.73		0.0	A B B^C^C D E E^	TR	0.0	A B B^C^C D E E^
1	7	66.19		0.0	A B B^C^C D E E^	TR	0.0	A B B^C^C D E E^
1	8	75.64		0.0	A B B^C^C D E E^	TR	0.0	A B B^C^C D E E^
1	9	85.10		0.0	A B B^C^C D E E^	TR	0.0	A B B^C^C D E E^
1	10	94.55		0.0	A B B^C^C D E E^	TR	0.0	A B B^C^C D E E^
1	11	104.01		0.0	A B B^C^C D E E^	TR	0.0	A B B^C^C D E E^
1	12	113.46		0.0	A B B^C^C D E E^	TR	0.0	A B B^C^C D E E^
1	13	122.92		0.0	A B B^C^C D E E^	TR	0.0	A B B^C^C D E E^
1	14	132.37		0.0	A B B^C^C D E E^	TR	0.0	A B B^C^C D E E^
1	15	141.83		0.0	A B B^C^C D E E^	TR	0.0	A B B^C^C D E E^
1		150.10	SCG					
1	16	151.28		0.0	A B B^C^C D E E^	TR	0.0	A B B^C^C D E E^
1	17	160.74		0.0	A B B^C^C D E E^	TR	0.0	A B B^C^C D E E^
1	18	170.19		0.0	A B B^C^C D E E^	TR	0.0	A B B^C^C D E E^
1	19	179.65		0.0	A B B^C^C D E E^	TR	0.0	A B B^C^C D E E^
1	20	189.10		0.0	A B B^C^C D E E^	TR	0.0	A B B^C^C D E E^

NOTE: TR = Truck loading; For LRFD rating, fatigue results are not shown.

NOTE: ITEM ; INT = Span interval point
SCG = Section-change point
POC = Dead load point of contraflexure

I:P = Point where INT coincides with POC
I:C = Point where INT coincides with SCG
S:P = Point where SCG coincides with POC

1

TABLE 1.2.22.24=SHEAR CONNECTOR (FATIGUE CRITERIA) (UNFACTORED)
****

SP NO	IN NO	D FROM L SUPT (ft)	Vsr [1]	AASHTO E6.10.10.1.2 Q/I [2]	Sr [3]	AASHTO LRFD Eqn. 6.10.10.2-1,2 [4],Zr <--Input	SHEAR CONN. PER TRANS. SECTION [5], input	MAX. ALLOW. SHEAR CONN. ---PITCH---- (in),[6]
1	0	0.00	0.0	.11309E-01	0.0	TR 2.11	3	0.00

1	1	9.45	0.0	.11309E-01	0.0	TR	2.11	3	0.00
1	2	18.91	0.0	.11309E-01	0.0	TR	2.11	3	0.00
1	3	28.36	0.0	.11309E-01	0.0	TR	2.11	3	0.00
1	4	37.82	0.0	.11309E-01	0.0	TR	2.11	3	0.00
1	5	47.28	0.0	.10759E-01	0.0	TR	2.11	3	0.00
1	6	56.73	0.0	.10759E-01	0.0	TR	2.11	3	0.00
1	7	66.19	0.0	.10759E-01	0.0	TR	2.11	3	0.00
1	8	75.64	0.0	.10759E-01	0.0	TR	2.11	3	0.00
1	9	85.10	0.0	.10759E-01	0.0	TR	2.11	3	0.00
1	10	94.55	0.0	.10759E-01	0.0	TR	2.11	3	0.00
1	11	104.01	0.0	.10759E-01	0.0	TR	2.11	3	0.00
1	12	113.46	0.0	.10759E-01	0.0	TR	2.11	3	0.00
1	13	122.92	0.0	.10759E-01	0.0	TR	2.11	3	0.00
1	14	132.37	0.0	.10759E-01	0.0	TR	2.11	3	0.00
1	15	141.83	0.0	.10759E-01	0.0	TR	2.11	3	0.00
1	16	151.28	0.0	.11309E-01	0.0	TR	2.11	3	0.00
1	17	160.74	0.0	.11309E-01	0.0	TR	2.11	3	0.00
1	18	170.19	0.0	.11309E-01	0.0	TR	2.11	3	0.00
1	19	179.65	0.0	.11309E-01	0.0	TR	2.11	3	0.00
1	20	189.10	0.0	.11309E-01	0.0	TR	2.11	3	0.00

Please read NOTE on the following page

1

NOTE: [1] Vsr = range of shear due to live loads and impact in Kips; at any section, the range of shear shall be taken as the difference in the minimum and maximum shear envelopes (excluding dead loads); AASHTO LRFD Eqn.6.10.10.1.2-2

[2] Q/I : Q= statical moment about the neutral axis of the composite section of the transformed compressive concrete area or the area of reinforcement embedded in the concrete for negative moment, in cubic inches; AASHTO LRFD Eqn.6.10.10.1.2-2

I= moment of inertia of the transformed composite girder in positive moment regions or the moment of inertia provided by the steel beam including or excluding the area of reinforcement embedded in the concrete in negative moment regions, in inches to the fourth power.

[3] Sr = Vsr*Q/I = range of horizontal shear, in Kips per inches, at the junction of the slab and girder at the point in the span under consideration.

[4] Zr = allowable range of horizontal shear, in Kips, on an individual connector, AASHTO LRFD Eqn.6.10.10.2-1

* Default ALPHA value based on 7/8" diameter and input road type

[5] No. of shear connectors per transverse section. This value is from input data type 12032.

[6] Maximum allowable pitch = 24 inches, AASHTO LRFD ART. 6.10.10.1.2

** The connector spacing shown here is calculated based upon AASHTO Fatigue Criteria only; see AASHTO 6.10.10.1.2
No of cycles is 87600000

TABLE 1.2.22.24A=SHEAR CONNECTOR (STRENGTH LIMIT STATE)
****

SP NO	IN D NO	L FROM SUPT (ft)	MOMENT REGION 1=POS. 0=NEG.	P2p,1n (k) LRFD 6.10.10.4.2	P1p (k)	P2n (k)	NO OF SHEAR CONNECTOR ---- N ---- FATIG. CRI.	<=>	SEE NOTE N1	SEE NOTE N2	STATUS BLANK=OK CHECK=**
1	10	94.55	1	6475.0	3304.8		144	> 107			
1	20	189.10	1	6475.0	3304.8		144	> 107			

Please read NOTE on the Following Page

Strength Limit State (Article 6.10.10.4)

[1] The number of shear connectors provided between the section of maximum positive moment and each adjacent point of 0.0 moment, or between each adjacent point of 0.0 moment and centerline of an interior support shall be checked to ensure that adequate connectors are provided for Strength Limit State.

[2] The number of shear connectors required equal or exceed the number given by the formula :

N1 (N2) = Vh / Qr - - - - - - (Eq. 6.10.10.4.1-2)

Where

N1 = Number of connectors between points of maximum positive moment and each adjacent point of 0.0 moment
N2 = number of connectors between each adjacent point of 0.0 moment and the centerline of an interior support
Vh = nominal horizontal shear force
Qr = factored shear resistance of one shear connector
= (Phi)sc Qn - - - - - - (Eq. 6.10.10.4.1-1)
Qn = nominal resistance
(Phi)sc = resistance factor for shear connectors

[3] The total horizontal shear force between the point of maximum positive moment and each adjacent point of 0.0 moment shall be the lesser either:

P1p = 0.85 f'c bs ts - - - - - - (Eq. 6.10.10.4.2-2)

or

P2p,1n = Fyw D tw + Fyt bft tft + Fyc bfc tfc (Eq. 6.10.10.4.2-3,5)

Where
f'c = specified 28-day compressive strength of the concrete
bs = effective width of the slab
bfc = width of compression flange
bft = width of tension flange
ts = slab thickness
Fyw = specified minimum yield strength of the web
Fyt = specified minimum yield strength of the tension flange
Fyc = specified minimum yield strength of the compression flange
D = web depth
tft = thickness of tension flange
tfc = thickness of compression flange
tw = web thickness

[4] For continuous-span composite sections, the total horizontal shear force between each adjacent point of 0.0 moment and the centerline of an interior support shall be taken as:

P2n = 0.45 f'c bs ts- - - - - - (Eq. 6.10.10.4.2-6)

Where
bs = effective width of the concrete deck
ts = thickness of a concrete deck

TABLE 1.2.22.24B=RECOMMANDED SHEAR CONNECTOR REQUIRED PITCH
****

SPAN NO.	CURRENT SPAN FROM (ft)	TO (ft)	REQUIRED PITCH (in)
1	0.000	94.550	24.000

1	94.550	189.100	24.000

1

TABLE 1.2.22.24C=TENSION-COMPRESSION-REVERSAL AREAS
****

SPAN NO.	CURRENT SPAN FROM (ft)	TO (ft)	T C R
1	0.0	189.1	C

NOTE: T: TENSION AREA, C: COMPRESSION AREA,
R: REVERSAL AREA BASED ON TOTAL TOP FLANGE
STRESSES

1

TABLE 1.2.30.1=CODE CHECK STATUS SUMMARY
****

STATUS	TABLE NO.
OK	1.2.8.2=MAXIMUM LIVE LOAD DEFLECTION FOR COMPOSITE CONSTRUCTION
OK	1.2.22.4=DEPTH RATIOS
OK	1.2.22.10=CONSTRUCBILITY CHECK
OK	1.2.22.14=STRENGTH LIMIT STATE CHECK
OK	1.2.22.17=TRANSVERSE STIFFENER SPACING
OK	1.2.22.18=STATUS OF TRANSVERSE STIFFENERS
OK	1.2.22.19=SHEAR CAPACITY CHECK
OK	1.2.22.20=SECTION PROPERTY CHECK OF TRANSVERSE STIFFENERS
OK	1.2.22.21=SERVICE LIMIT STATE CHECK
OK	1.2.22.24A=SHEAR CONNECTOR (ULTIMATE STRENGTH CRITERIA)

OK 1.2.22.25=REBAR FATIGUE CHECK IN THE NEGATIVE MOMENT REGION

MORE TABLES TO BE INSPECTED ...

1.2.22.23A=FATIGUE STRESS RANGE FOR TRUCK (UNFACTORED)

1.2.22.24=SHEAR CONNECTOR (FATIGUE CRITERIA) (UNFACTORED)

1.2.22.29=SPLICE DESIGN AT SECTION CHANGE POINTS

1

TABLE 1.2.32.1=RATING; MAXIMUM STRENGTH
****

SP NO	IN D NO L	FROM SUPT (ft)	MOMENT CAP. (k-ft) STRESS	UNFACTORED DEAD LOAD MOMENT D1; k-ft	D2 ksi	UNFACTORED L+I MAX. MOMENT POS.	NEG. MAX. STRESS	OPERAT. RATING FACTOR [3]	LIVE LOAD TYPE	INVENT. RATING FACTOR	C A T
1	0	0.00	21665.7	0.0	0.0	0.0	0.0	9.99	HL-93	9.99	0
1	1	9.45	21665.7	1647.5	163.5	1026.0	0.0	9.99	HL-93	9.99	0
1	2	18.91	21665.7	3121.6	309.7	1940.5	0.0	6.63	HL-93	5.12	0
1	3	28.36	21665.7	4422.2	438.7	2743.4	0.0	4.21	HL-93	3.25	0
1	4	37.82	21665.7	5549.5	550.6	3434.8	0.0	3.03	HL-93	2.34	0
1	5	47.28	25809.8	6503.3	645.2	4011.8	0.0	3.12	HL-93	2.40	0
1	6	56.73	25809.8	7283.7	722.6	4482.9	0.0	2.61	HL-93	2.01	0
1	7	66.19	25809.8	7890.7	782.8	4849.4	0.0	2.29	HL-93	1.76	0
1	8	75.64	25809.8	8324.2	825.9	5107.2	0.0	2.08	HL-93	1.61	0
1	9	85.10	25809.8	8584.3	851.7	5249.2	0.0	1.98	HL-93	1.53	0
1	10	94.55	25809.8	8671.1	860.3	5296.6	0.0	1.94	HL-93	1.50	0
1	11	104.01	25809.8	8584.3	851.7	5249.2	0.0	1.98	HL-93	1.53	0
1	12	113.46	25809.8	8324.2	825.9	5107.2	0.0	2.08	HL-93	1.61	0
1	13	122.92	25809.8	7890.7	782.8	4849.4	0.0	2.29	HL-93	1.76	0
1	14	132.37	25809.8	7283.7	722.6	4482.9	0.0	2.61	HL-93	2.01	0
1	15	141.83	25809.8	6503.3	645.2	4011.8	0.0	3.12	HL-93	2.40	0
1	16	151.28	21665.7	5549.5	550.6	3434.8	0.0	3.03	HL-93	2.34	0
1	17	160.74	21665.7	4422.3	438.7	2743.4	0.0	4.21	HL-93	3.25	0
1	18	170.19	21665.7	3121.6	309.7	1940.5	0.0	6.63	HL-93	5.12	0
1	19	179.65	21665.7	1647.5	163.5	1026.0	0.0	9.99	HL-93	9.99	0
1	20	189.10	21665.7	0.0	0.0	0.0	0.0	9.99	HL-93	9.99	0

Please read NOTES on the following page

1

NOTE [1]: AASHTO 5.5.2.1 OPERATING RATING OF SECTIONS GOVERNED BY
"MAXIMUM STRENGTH" LOAD-STRENGTH RELATIONSHIP, PP.35
---> BASED ON LRFD , STRENGTH LIMIT STATE CRITERIA

[2]: AASHTO 5.5.2.1A ; MAXIMUM STRENGTH.GE. 1.3[D+RF(L+I)]

WHERE .GE. = GREATER OR EQUAL TO
D = EFFECT OF DEAD LOAD ,(Ksi)
RF = RATING FACTOR
L+I = EFFECT OF LIVE LOAD PLUS IMPACT ,(Ksi)

[3]: RATING FACTOR 9.99 INDICATES THAT THE CURRENT
SECTION IS NOT GOVERNING AT ALL.

RATING FACTOR 0.0 INDICATES THAT EITHER ALLOWABLE STRESS
IS TOO LOW OR DEAD LOAD STRESS IS TOO HIGH

[4]: LRFD SECTION IS RATED BY
RF=(Mu-ENS1*(GDC*D1+GDW*D2)))/ENS1*GLLST1*(L+I)
FOR NON COMPACT SECTIONS, RATING FORMULA IS MODIFIED TO
RF=(Mu-
ENS1*(GDC*D1*S2/S0+GDW*D2*S2/S1)))/ENS1*GLLST1*(L+I)
WHERE S0,S1 & S2 ARE SECTION MODULUS OF D1,D2 & L
STRESS CATEGORY SHOWN ON THE LAST COL. (0=COMPACT)

[5]: FOR CONTINUOUS BEAM WITH COMPACT SECTIONS,
THE STRESSES ARE CALCULATED AFTER REDISTRIBUTION

1

TABLE 1.2.32.2=RATING; SERVICEABILITY STRENGTH
****

SP NO	IN NO	D FROM L SUPT (ft)	0.95Fy OR 0.80Fy (ksi)	UNFACTORED DEAD LOAD ---STRESS--- STEEL TOP;ksi;BOT		UNFACTORED L+I STRESS MAX. POS. ---STEEL--- TOP;ksi;BOT		MAX. NEG. --- STEEL--- TOP;ksi;BOT		OPERAT. RATING FACTOR [3]	LIVE LOAD TYPE	INVENT. RATING FACTOR
1	0	0.00	47.5	0.00	0.00	0.00	0.00	0.00	0.00	9.99	HL-93	7.68
1	1	9.45	47.5	-7.28	6.45	-0.72	2.87	0.00	0.00	9.99	HL-93	7.68
1	2	18.91	47.5	-13.79	12.22	-1.36	5.42	0.00	0.00	6.50	HL-93	5.00
1	3	28.36	47.5	-19.53	17.32	-1.92	7.67	0.00	0.00	3.94	HL-93	3.03
1	4	37.82	47.5	-24.51	21.73	-2.40	9.60	0.00	0.00	2.68	HL-93	2.06
1	5	47.28	47.5	-25.82	19.73	-2.82	8.85	0.00	0.00	3.14	HL-93	2.41
1	6	56.73	47.5	-28.92	22.10	-3.15	9.89	0.00	0.00	2.57	HL-93	1.98

1	7	66.19	47.5	-31.33	23.94	-3.41	10.70	0.00	0.00	2.20	HL-93	1.69
1	8	75.64	47.5	-33.05	25.26	-3.59	11.27	0.00	0.00	1.97	HL-93	1.52
1	9	85.10	47.5	-34.08	26.05	-3.69	11.58	0.00	0.00	1.85	HL-93	1.42
1	10	94.55	47.5	-34.43	26.31	-3.72	11.69	0.00	0.00	1.81	HL-93	1.39
1	11	104.01	47.5	-34.08	26.05	-3.69	11.58	0.00	0.00	1.85	HL-93	1.42
1	12	113.46	47.5	-33.05	25.26	-3.59	11.27	0.00	0.00	1.97	HL-93	1.52
1	13	122.92	47.5	-31.33	23.94	-3.41	10.70	0.00	0.00	2.20	HL-93	1.69
1	14	132.37	47.5	-28.92	22.10	-3.15	9.89	0.00	0.00	2.57	HL-93	1.98
1	15	141.83	47.5	-25.82	19.73	-2.82	8.85	0.00	0.00	3.14	HL-93	2.41
1	16	151.28	47.5	-24.51	21.73	-2.40	9.60	0.00	0.00	2.68	HL-93	2.06
1	17	160.74	47.5	-19.53	17.32	-1.92	7.67	0.00	0.00	3.94	HL-93	3.03
1	18	170.19	47.5	-13.79	12.22	-1.36	5.42	0.00	0.00	6.50	HL-93	5.00
1	19	179.65	47.5	-7.28	6.45	-0.72	2.87	0.00	0.00	9.99	HL-93	7.68
1	20	189.10	47.5	0.00	0.00	0.00	0.00	0.00	0.00	9.99	HL-93	7.68

Please read NOTES on the following page

1

BRIDGE ENGINEERING SOFTWARE & TECHNOLOGY CENTER
DEPARTMENT OF CIVIL & ENVIRON. ENGINEERING
UNIVERSITY OF MARYLAND

MERLIN V 9.0
COMPOSITE
LRF -- 2004
RATING
PAGE 84

NOTE [1]: AASHTO 5.5.2.2 OPERATING RATING OF SECTIONS GOVERNED BY SERVICEABILITY LOAD-STRENGTH RELATIONSHIP, PP.37
---> BASED ON LRFD, SERVICE II LIMIT STATE CRITERIA

[2]: AASHTO 5.5.2.2A; SERVICEABILITY STRENGTH.GE. [D+RF(L+I)]

[3]: RATING FACTOR 9.99 INDICATES THAT THE CURRENT SECTION IS NOT GOVERNING AT ALL.

RATING FACTOR 0.0 INDICATES THAT EITHER ALLOWABLE STRESS IS TOO LOW OR DEAD LOAD STRESS IS TOO HIGH

[4]: FOR CONTINUOUS BEAM WITH COMPACT SECTIONS, THE STRESSES ARE CALCULATED AFTER REDISTRIBUTION

1

BRIDGE ENGINEERING SOFTWARE & TECHNOLOGY CENTER
DEPARTMENT OF CIVIL & ENVIRON. ENGINEERING
UNIVERSITY OF MARYLAND

MERLIN V 9.0
COMPOSITE
LRF -- 2004
RATING
PAGE 85

TABLE 1.2.32.3A=BRIDGE RATING INFORMATION FOR AASHTO TRUCK
****

SPAN		CRITICAL LOCATION	GOVERNING			GOVERNING
NO.	LENGTH	D FROM L SUPT	RATING CRITERION	OPERATING RATING	INVENTORY RATING	LIVE LOAD TYPE

	(ft)	(ft)				
1	189.10	94.55	SERVICEBILITY	1.81	1.39	HL-93

NOTE: Control Rating Factor for Current Bridge:
SERVICEBILITY
Operating= 1.81
Inventory= 1.39

1

TABLE 1.2.32.4=RATING; LIVE LOAD DEFLECTION
****

SPAN NO.	D FROM L SUPT (ft)	NUMBER OF LANE -----AND------ DIST. FACTOR FOR LL DEFL.		LL + I. DEFLECTION GOVERN. ---------- (inch)	LOAD TYPE	RATING FACTOR FOR LL DEFL. ---------- RF = L/(800 * LL DEFL.)
1	94.55	11	0.550	-1.40	HL-93	2.03
		12	0.600	-1.52		1.86

NOTE: [1] "-" indicates downward deflection

[2] RF * (live load defl.) = span length/800, therefore

RF = L/(800 * LL Defl.), if = 99, No rating

Merlin Dash Run FL120

Span 1, Beam 2 (Controls)

FL 120 INTERIOR
RATING


```
*************************************
*                                   *
* BRIDGE ENGINEERING SOFTWARE CENTER *
*   DEPARTMENT OF CIVIL ENGINEERING  *
*       UNIVERSITY OF MARYLAND       *
*                                   *
*************************************
```

CHKD.: A/L 6/29/06

COPYRIGHT NOTICE AND DISCLAIMER
---

1. NOTICE : COPYRIGHT 1985-2005 THE UNIVERSITY OF MARYLAND, BRIDGE ENGINEERING SOFTWARE CENTER.

2. DISCLAIMER : THE SOFTWARE IS A PROPRIETARY PRODUCT OF THE UNIVERSITY OF MARYLAND, BRIDGE ENGINEERING SOFTWARE CENTER AND ONLY CONDITIONALLY ISSUED. POSSESSION, ACCESS AND USE IS PROHIBITED EXCEPT AS EXPRESSLY AUTHORIZED BY THE UNIVERSITY OF MARYLAND, BRIDGE ENGINEERING SOFTWARE CENTER.

3. WARRANTY AND LIMITATION OF LIABILITY :

(A) UMD REPRESENTS THAT TO THE BEST OF ITS KNOWLEDGE, THE LICENSED MATERIALS DO NOT INFRINGE ANY COPYRIGHT, TRADE SECRET OR PATENT.

(B) THE SELECTION OF APPROPRIATE SOFTWARE, THE COLLECTION AND STORAGE OF DATA, AND THE INTERPRETATION OF OUTPUT ARE LICENSEE'S RESPONSIBILITY, AND NOT UMD'S RESPONSIBILITY. THE LICENSED MATERIALS ARE ONLY TO BE USED AS A TOOL AND NOT AS A SUBSTITUTE FOR LICENSEE'S PROFESSIONAL JUDGMENT.

(C) THE LICENSED MATERIALS WERE FORMERLY OWNED AND DEVELOPED WITH THE ASSISTANCE OF THE STATE HIGHWAY ADMINISTRATION OF THE MARYLAND DEPARTMENT OF TRANSPORTATION ("MDOT"). THE LICENSED MATERIALS ARE MADE AVAILABLE ON AN "AS IS" BASIS. EXCEPT AS EXPRESSLY SET FORTH IN THIS AGREEMENT, BOTH UMD AND MDOT DISCLAIM ANY AND ALL PROMISES, REPRESENTATIONS AND WARRANTIES BOTH EXPRESS AND IMPLIED WITH RESPECT TO THE LICENSED MATERIALS AND ANY SUPPORT SERVICES PROVIDED HEREUNDER, INCLUDING THEIR CONDITION, CONFORMITY TO ANY REPRESENTATION OR DESCRIPTION, THE EXISTENCE OF ANY LATENT OR PATENT DEFECTS THEREIN, AND THEIR MERCHANTABILITY OR FITNESS FOR A PARTICULAR USE OR PURPOSE.

(D) THE CUMULATIVE LIABILITY OF UMD TO LICENSEE FOR ALL CLAIMS, DEMANDS OR ACTIONS ARISING OUT OF OR RELATING TO THE LICENSED MATERIALS AND THIS AGREEMENT, SHALL NOT EXCEED THE TOTAL AMOUNT OF ALL LICENSE FEES PAID TO UMD HEREUNDER DURING THE TWELVE (12) MONTHS

IMMEDIATELY PRECEDING SUCH CLAIM, DEMAND OR ACTION.
THIS LIMITATION OF LIABILITY IS INTENDED TO APPLY
WITHOUT REGARD TO WHICH OTHER PROVISIONS OF THIS
AGREEMENT HAVE BEEN BREACHED OR HAVE PROVEN INEFFECTIVE.

(E) WITHOUT LIMITING THE FOREGOING, IN NO EVENT SHALL UMD
BE LIABLE FOR ANY BUSINESS EXPENSE, MACHINE DOWN TIME,
LOSS OF PROFITS, ANY INCIDENTAL, SPECIAL, EXEMPLARY OR
CONSEQUENTIAL DAMAGES, OR ANY CLAIMS OR DEMANDS BROUGHT
AGAINST LICENSEE OR LICENSEE'S CUSTOMERS, EVEN IF
UMD HAS BEEN ADVISED OF THE POSSIBILITY OF SUCH CLAIMS
OR DEMANDS. THIS LIMITATION UPON DAMAGES AND CLAIMS IS
INTENDED TO APPLY WITHOUT REGARD TO WHICH OTHER
PROVISIONS OF THIS AGREEMENT HAVE BEEN BREACHED OR
HAVE PROVEN INEFFECTIVE.

TABLE 0.0.1.1 PROJECT DATA
****

DESCRIPTION	DATE
SR 414 over US 441 - 78" Web - 10'-9" Spa (189.1 CL to CL)	5/22/06

CONTRACT NUMBER	STR NO	STR UNIT	DES -BY-	CHK -BY-	SPECS. USED
414-211	5		NJB		LRFD 3rd Edition

TABLE 0.0.1.2 GENERAL PROGRAM OPTIONS
****

OUTPUT LEVEL (0,1)	SPAN INTERVAL (MAX=20)	CONSTRUCTION 1= COMPOSITE 2= NONCOMP.	ANALYSIS CODE CODE ID	YEAR	UNIT TYPE	DESIGN OPTION	PROGRAM FLOW CONTROL
1	20	1	AASHTO	2004	0	2	3

* output level : 0 = basic output
  1 = detailed output

* span interval : maximum = 20
  default = 10

* structural type : 1 = composite (default)

```
                        2 = noncomposite
                        3 = reinforced concrete
                        4 = prestressed concrete

 * type of unit     : 0 = English (default)
                      1 = Metric
                      2 = Metric input English output
                      3 = English input Metric output

 * design option    : 0 = WSD (default)
                      1 = LFD
                      2 = LRFD


 * program flow     : 0 = DL analysis only
                      1 = DL + LL analysis
                      2 = code check
                      3 = rating
                      4 = design
                      5 = design + code check
                      6 = design + recycle + code check
                      7 = DL stage only
                      8 = DL stage + LL
```

STRUCTURAL DEATAILS FOR DEAD LOAD CALCULATION

	DEAD LOAD				SUPERIMPOSED DEAD LOAD				
AUTO DL 0=NO	SLAB THICK. (IN)	INTEGRAL W. S. (IN)	UNIT WT. (LB/FT3)	S.I.F WT. (LB/FT2)	AREA OF ADD. CONC. (FT*FT) (THE WHOLE BRIDGE)	RAIL/UTIL WT. (LB/FT)	WEARING SURFACE (LB/FT2)	MODULUS 3N	RATIO N
1	8.00	0.50	150.00	20.00	0.00	2502.00	0.00	0.00	0.00

1

TABLE 0.0.3.1 STRUCTURAL DETAILS
****

NUMBER OF GIRDERS	BEAM POSITION 1=INT. 2=EXT.	WIDTH BETWEEN CURBS OR BARRIER (ft)	OVERHANG WIDTH (ft)	EDGE OF SLAB TO CURB (ft)	HAUNCH DEPTH (in)	HAUNCH WIDTH. (in)	COMPOSITE PERCENTAGE AT NEG MOM REGION (%)	STEEL LOAD DETAIL FACTOR >= 1.0

13	1	134.38	4.44	1.75	4.00	30.00	0.00	1.10

---

* WIDTH BETWEEN CURBS OR BARRIERS (ROAD WIDTH) is used for the determination of traffic lanes

* The section properties with composite percentage at negative moment region is calculated by using the linear interpolation between the noncomposite section (N=Inf.) and 100% composite for the analysis at negative moment region.

* DETAIL FACTOR is used for the steel dead load only

TABLE 0.0.3.2 SPAN LENGTHS --- in feet
****

SPAN-1	SPAN-2	SPAN-3	SPAN-4	SPAN-5	SPAN-6	SPAN-7	SPAN-8	SPAN-9	SPAN-10
189.10	0.00	0.00	0.00	0.00	0.00	0.00	0.00	0.00	0.00

TABLE 0.0.3.4 BEAM SPACING --- in feet
****

SPAN-1	SPAN-2	SPAN-3	SPAN-4	SPAN-5	SPAN-6	SPAN-7	SPAN-8	SPAN-9	SPAN-10
10.75	0.00	0.00	0.00	0.00	0.00	0.00	0.00	0.00	0.00

TABLE 0.0.4.1 DEFINITION OF SECTIONS
****

SECTION NO.	STANDARD SECTN NOMINAL DEPTH (in)	STANDARD SECTN WEIGHT (lb/ft)	PLATE GIRDER WEB DEPTH (in)	PLATE GIRDER WEB THICK.	ROLLED SECTIONS WITH COVER PLATES OR PLATE GIRDERS ... (in) TOP PLATE WIDTH	TOP PLATE THICK.	BOT. PLATE WIDTH	BOT. PLATE THICK.	REINFORCED CONCRETE SECTION AREA (in**2)	Ix (in**4)
1	PG		78.0	0.6250	24.00	1.1250	29.00	1.2500		
2	PG		78.0	0.6250	24.00	1.2500	29.00	1.7500		

NOTE: [1] maximum allowable section number is 70

[2] For design option (flow 4, 5 or 6) this card need not be input

1

TABLE 0.0.5.1 DEFINITION OF MEMBERS
****

MEMBER NUMBER (IN ORDER)	MEMB SECT LEFT	END ID RIGHT	MEMBER DESCRIPTN LNGTH (ft)	TYPE 0=PRISMAT	PARAMETERS FOR NONPRISMATIC MEMB S(0)	S(1)	YIELD STRESS (KSI) WEB	TOP	BOT
1	1	1	39.00				50.	50.	50.
2	2	2	111.10				50.	50.	50.
3	1	1	39.00				50.	50.	50.

NOTE: [1] maximum allowable member number is 70.

[2] For design process (flow 4, 5 or 6) this card need not be input

[3] For hybrid section, yield stress defined here will override DATA TYPE 13012 for code checking

1

TABLE 0.0.6.1 AASHTO LIVE LOADING - LOAD TYPE (A)
****

AASHTO LOADING HL - 93	TANDEM LIVE LOAD 1=YES : 0=NO	AASHTO ROAD TYPE 1,2,3 OR 4	ADTT	SIDEWALK LIVE LOAD (k/ft)
HL-93	1	1	0	0.00

HL-93 VEHICLE X FACTOR OF 0.00

NOTE: * Road types 1, 2, 3 and 4 are used for fatigue check.

* Road type 1 is Rural Interstate. 2 is Urban Interstate.
  3 is Other Rural. 4 is Other Urban.
  truck on the bridge distributed to the girders as designated
  in AASHTO LRFD Art.4.6.2.2 for one traffic lane loading.

  For Fatigue, Fraction of Truck, p, is based on the Road Types.

  Ref. AASHTO LRFD Table C3.6.1.4.2.1.

* Default road type = 1

* Sidewalk live loading is assumed taken by exterior girder only

* HL-93 is for both truck + lane and tandem + lane loading,

1

TABLE 0.7.1.2 SPECIAL VEHICLE DATA -- LOAD TYPE C
****

SPECIAL VEHICLE IDENTIFICATION AND DESCRIPTION

LOADING DESIGNATION	VEHICLE DESCRIPTION
F120	Florida FL120 Permit Truck

1

SPECIAL VEHICLE DATA --- LOAD TYPE C --- (07022)
****

SPECIAL VEHICLE AXLE WEIGHT AND SPACINGS

AXLE	SPACING	AXLE	SPACING	AXLE	SPACING
NO WHT (k)	NO DIST (ft)	NO WHT (k)	NO DIST (ft)	NO WHT (k)	NO DIST (ft)

1 13.33 1 14.00 2 53.33 2 14.00 3 53.33 0 0.00

1

TABLE 0.8.1.2 SPECIFICATION OF IMPACT AND DISTRIBUTION FACTORS
****

IMPACT FACTOR TO OVERRIDE THE AASHTO FORMULA

SP NO	IMP FCTR STR/SER (%)		OPTIONAL CALCULATION OF FACTOR LOADING TYPES DF M- ST/SE	DF M+ FA	DF M- FA	IMP F FA (%)	A D M G C NO=0 ;YES= 1	OPTIONAL DISTRIBUTION FACTORS DF M+ ST/SE	LOADING TYPES A D M G C
1	0.00	0	0.00	0.00	0.00	0.00	0 0 0 0 0	0.00	0 0 0 0 0
1	0.00	0	0.00	0.00	0.00	17.68	0 0 0 0 0	0.00	0 0 0 0 0
2	0.00	0	0.00	0.00	0.00	0.00	0 0 0 0 0	0.00	0 0 0 0 0
2	0.00	0	0.00	0.00	0.00	17.68	0 0 0 0 0	0.00	0 0 0 0 0

NOTE ** : distribution factor - fraction of a wheel load for WSD/LFD
or fraction of an axle load for LRFD

0 = The special distribution factor defined is not applied to the indicated loading type.

1 = The special distribution factor defined is applied to the indicated loading type of calculation of all moment, shear and deflection.

2 = The special distribution factor defined is only applied to the loading type for calculating moment.

3 = The special distribution factor defined is only applied to the loading type for calculating shear.

4 = The special distribution factor defined is only applied to the loading type for calculating deflection.

1

TABLE 0.9.1.2 SPECIAL PROGRAM OPTIONS - LIMIT STATE FACTORS for LRFD only

****

* Please refer to AASHTO LRFD Table 3.4.1-1 & 2

	DEAD LOAD		LIVE LOAD			DRI FACTOR RESISTANCE		
	[1] DC	[2] DW	[3] ST	[4] SE	[5] FA	[6] DRI	[7] PHI	[8] THETA
MAXIMUM	0.000	0.000	1.350	0.900	0.000	0.000	0.000	0.0
MINIMUM	0.000	0.000	1.350	0.900		0.000		

---

[1] DC: Component and Attachments

[2] DW: Wearing Surface and Utilities

[3] ST: Maximum for Strength-I and Minimum for Strength-II

[4] SE: Maximum for Service-I and Minimum for Service-II

[5] FA: Fatigue

[6] DRI: Factor related to Ductility, Redundancy and operational Importance
Maximum for Strength and Minimum for Other Limit State
(AASHTO LRFD Art. 1.3.2.1)

[7] PHI: Resistance Factor (AASHTO LRFD Art. 1.3.2.1)

[8] THETA: Skew Angle in Degree

1

TABLE 0.0.11.1 DEFINITION OF UNIFORM AND CONCENTRATED LOADS
****

LOAD IDENTIFICATION		UNIFROM LOAD DATA			CONCENTRATED LOAD DATA	
LOAD NO.	TYPE DESCRIPTION	INTENSITY (k/ft)	POSITION FROM (ft)	TO	INTENSITY (Kips)	DISTANCE FROM L SUPT (ft)

1	1	0.500	0.00	189.10	0.00	0.00

NOTE: LOAD TYPE, 0 = (Default) Loads for noncomposite construction or Superimposed Loads for composite construction (In LRFD, it is for DW load)

1 = Superimposed Loads (In LRFD, it is for DC2 load)

2 = Noncomposite Loads,(In LRFD, it is for DC1 load) where N = modulus ratio = Es/Ec

1

TABLE 0.0.12.2 SPLICE DESIGN DATA
****

NO. OF COLUMNS OF WEB BOLTS	DIAMETER OF BOLTS (in)	ALLOWABLE STRESS OF BOLTS (ksi)	WEB SPL. OPT. 0=GROSS SECTION 1=NET SECTION	WEB N.A. ECCEN. 0=NOT CONSIDERED 1=CONSIDERED
0	0.0000	21.00	0	0

NOTE: D = Diameter of the bolt, default is 7/8"

1

TABLE 0.0.12.3 SHEAR CONNECTOR AND SLAB REINFORCEMENT DATA
****

SHEAR CONNECTOR			Qn VALUE	Zr VALUE		SLAB REINFORCEMENT			CONCRETE	
NO. PER TRAN. SEC	DIA. (in)	CONNECTOR IN NEGAT. M. REGION 0=NO 1=YES	AASHTO ART. 6.10.10.4 (kip / per connect.)	AASHTO ART. 6.10.10.2 (kip / per connector) Truck	Lane	REBAR YIELD STRESS Fy (ksi)	BAR AREA PER FOOT OF SLAB (in**2)	DIST. FROM TOP (in)	COMP. STRENG. AT 28 DAYS (ksi)	COMP. ALLOW -ABLE (ksi)
3	0.875	0	0.00	0.0	0.0	60.0	1.00	4.00	4.50	0.00

```
NOTE: Qr = nominal resistance of the shear connector
         = (phi)sc x Qn
         ... see AASHTO LRFD Eqs.6.10.10.4.1-1,4.3-1 or 4.3-2

      Zr = shear fatigue resistance of an individual shear connector
         ... see AASHTO LRFD Eqs.6.10.10.2-1 & -2

     fc' = unit ultimate compressive strength of concrete as
           determined by cylinder test at the age of 28 days
         = 4 ksi (default)

      fc = allowable compressive strength of concrete
         = 0.85fc' (default)


     * default number of shear connector per trans. section = 3

     * If the shear connectors and slab reinforcements are supplied
       in the negative moment region, the contribution
       of rebar on the section properties in the negative moment
       region (for N = 3n & N = n) will be considered.

     * If Zr left blank, Road type input in Data 06012 and
       7/8"-diameter studs are assumed

     * default rebar yield stress = 60 ksi
1
```



```
TABLE 0.12.4.2 DESIGN OPTION (1) ---- DESIGN METHOD & STIFFENER OPTION
                                      ********************************

                                 TRANSVERSE AND LONGITUDINAL STIFFENER OPTION
                                 ---------------------------------------------
 SECTION ID.   DESIGN METHOD  TRANSVERSE/LONGITUDINAL    BEARING STIFFENER
------------- -------------- --------------------- -----------------------
0,4=PLATE GIRDER 0=MIN. WEIGHT  0 = DO NOT USE        0= A709-36,     1= -50
1,2=WIDE FLANGE  1=MIN. COST    1 = USE IF NECESSARY  2= BEST OF 0,1  3= -50W
-------------------------------------------------------------------------------

      0              0          1          0                  1

-----------------------------------------------------------
NOTE: Design method: 0 = minimum weight
                        objective function = cross-sectional
                                             area

                     1 = minimum cost
                        objective function = cost function

      Section ID   : 0 = Plate Girder design with constant flange
                        only in the pos. mom. area
                     1 = Wide Flange compact design
```

2 = Wide Flange braced noncompact design
3 = Plate Girder design with constant flange across

** All supports are assumed to have bearing stiffener regardless the stiffener option

1

DESIGN OPTION (4) ---- MATERIAL AND FABRICATION COST ---- (12072)
****

MATERIALS			MATERIAL COST			FABRICATION COST	
ID.	ASTM DESINATION	Fy (ksi)	BASE PRICE ($/lb)	EXTRAS (SIZE/WIDTH) ADJUSTMENT (%)	UNIT PRICE ($/lb)	ADJUSTMENT (%)	UNIT PRICE ($/lb)
1	A-709	50.0	0.000	0.0	0.000	0.0	0.00

NOTE: [1] ASTM = American Society for Testing and Materials

[2] ASTM DESINATION ..... A-36, A-572, or A-588

[3] If the cost data are not input, all the built-in cost data will be used for the design processes

[4] The default material is ASTM A-36 (Fy = 36 ksi). The maximum no. of allowable materials is 3.

[5] Without inputing 12082, field splice location will be determined by the program according to contra-flexure points, and the first material property listed here will be used along the whole bridge

1

TABLE 0.0.13.1 YIELD STRESS (Fy) AND LATERAL BRACING DATA (lb)
****

LOCATION		YIELD STRESS		SPACING OF LATERAL BRACING
DISTANCE FROM	DISTANCE TO	Fy	Fy (WEB)	Lb

(ft)	(ft)	(ksi)	(ksi)	(ft)
0.00	189.10	50.0	50.0	24.12

NOTE: [1] default Fy = 36 ksi

[2] default spacing of lateral bracing = 25 feet

Please refer to AASHTO LRFD Art. 6.7.4 for requirement.

[3] The spacing of lateral bracing is also assumed to be the diaphragm spacing which is used for the calculation of wind effect (code check only).

1

TABLE 0.15.1.2 TRANSVERSE STIFFENER DATA
****

LOCATION DIST. FROM (ft)	LOCATION DIST. TO (ft)	B PARAMETER AASHTO 6.10.8.1	YIELD STRESS Fy (ksi)	STIFFENER SPACING (ft-in)	DIMENSIONS,(in) STIFF. WIDTH	DIMENSIONS,(in) STIFF. THICK
0.00	7.00	2.4	36.0	7- 0	9.50	1.0000
7.00	20.00	2.4	36.0	14- 0	7.00	0.5000
162.10	182.10	2.4	36.0	14- 0	7.00	0.5000
182.10	189.10	2.4	36.0	7- 0	9.50	1.0000

NOTE: B parameter .... AASHTO LRFD Art.6.10.8.1.4

B = 1.0 ..... for stiffener pairs (default)

= 1.8 ..... for single angles

= 2.4 ..... for single plates

1

TABLE 1.2.1.1=PROGRAM ASSUMPTIONS
****

NO.	D E S C R I P T I O N S
1	Small deflection theory
2	Material is elastic
3	Beam length is much greater than lateral dimensions
4	Torsional effects are neglected
5	Shear deformations are neglected
6	Two kinematic degree-of-freedom are assumed 'at each joint (vertical deflection and bending rotation)
7	Concentrated joint loads
8	Uniform member loads
9	Transformed sections are used for composite sections .... see AASHTO Art.10.38.1.4 or LRFD Art.6.10.1.1.1b
10	Sections symmetrical about vertical, principal axis
11	Unshored construction
12	Hinged bridge ends

F A C T O R S U S E D B Y L R F D		
13	GAMMA for Load DC maximum	= 1.25
14	GAMMA for Load DC minimum	= 0.90
15	GAMMA for Load DW minimum	= 1.50
16	GAMMA for Load DW minimum	= 0.65
17	GAMMA for LL Load Strength I	= 1.35
18	GAMMA for LL Load Strength II	= 1.35
19	GAMMA for LL Load Service I	= 0.90
20	GAMMA for LL Load Service II	= 0.90
21	GAMMA for LL Load Fatigue	= 0.75
22	ETA for Service Limit State	= 1.00
23	ETA for Strength Limit State	= 1.00

TABLE 1.2.2.1=LOADING INFORMATION
****

AVERAGE DEAD LOAD INTENSITIES
****

SPAN NO.	SLAB (K/FT)	+	STEEL (K/FT)	=	TOTAL (K/FT)
1	1.482		0.4577		1.9399

SUPERIMPOSED DEAD LOADS
****

LOAD		INTENSITY (K or K/Ft)	DIST FROM (Ft)	DIST TO (Ft)
1	DC2	0.192	0.000	189.100

TABLE 1.1.3.1=BRIDGE SUPERSTRUCTURE QUANTITIES
****

CONCRETE DECK				STEEL	SUPERSTRUCTURE TOTAL WEIGHT
	VOLUME		TOTAL	TOTAL	
UNIT WEIGHT (pcf)	(ft**3)	(yard**3)	WEIGHT (kip)	WEIGHT (kip)	(kip)

150.00	24291.1	899.7	3643.7	1125.2	4768.84

NOTE: [1] Concrete unit weight assumed to be 150 lb/ft**3

[2] Superimposed dead load not included

[3] Dead load detail factor for steel beam = 1.10 is included.

1

TABLE 1.1.3.2=DISTRIBUTION OF LRFD LIVE LOADS
****

SPAN NO.	AASHTO LOADING (A)	DUMP TRUCK (D)	MAXIMUM TRUCK (M)	SPECIAL TRUCK (G,C)	
1	0.755	0.755	0.755	0.755	FOR STRENGTH POSITIVE MOMENT
	1.001				FOR STRENGTH POSITIVE SHEAR
	1.047				FOR STRENGTH POSITIVE SKEWED
END SHEAR					
1	0.405				FOR FATIGUE POSITIVE MOMENT
	0.658				FOR FATIGUE POSITIVE SHEAR
	0.688				FOR FATIGUE POSITIVE SKEWED
END SHEAR					

1

TABLE 1.2.4.1=NONCOMPOSITE SECTION PROPERTIES FOR N=INFINITY
****

SP NO	IN NO	D FROM L SUPT (ft)	MOMENT OF INERTIA Ix (in**4)	WEB DEPTH D (in)	LOCATION OF N.A. FROM BOT OF STEEL Y(BS) (in)	ELASTIC SECTION MODULUS STEEL BOT. (in**3)	TOP.
1	0	0.00	122691.0	78.0	36.96	3319.4	2826.2
1	1	9.45	122691.0	78.0	36.96	3319.4	2826.2

1	2	18.91	122691.0	78.0	36.96	3319.4	2826.2
1	3	28.36	122691.0	78.0	36.96	3319.4	2826.2
1	4	37.82	122691.0	78.0	36.96	3319.4	2826.2
1	5	47.28	147147.9	78.0	34.30	4289.7	3151.1
1	6	56.73	147147.9	78.0	34.30	4289.7	3151.1
1	7	66.19	147147.9	78.0	34.30	4289.7	3151.1
1	8	75.64	147147.9	78.0	34.30	4289.7	3151.1
1	9	85.10	147147.9	78.0	34.30	4289.7	3151.1
1	10	94.55	147147.9	78.0	34.30	4289.7	3151.1
1	11	104.01	147147.9	78.0	34.30	4289.7	3151.1
1	12	113.46	147147.9	78.0	34.30	4289.7	3151.1
1	13	122.92	147147.9	78.0	34.30	4289.7	3151.1
1	14	132.37	147147.9	78.0	34.30	4289.7	3151.1
1	15	141.83	147147.9	78.0	34.30	4289.7	3151.1
1	16	151.28	122691.0	78.0	36.96	3319.4	2826.2
1	17	160.74	122691.0	78.0	36.96	3319.4	2826.2
1	18	170.19	122691.0	78.0	36.96	3319.4	2826.2
1	19	179.65	122691.0	78.0	36.96	3319.4	2826.2
1	20	189.10	122691.0	78.0	36.96	3319.4	2826.2

NOTE: For rolled section, the 5th column is the depth d (inch)

1

TABLE 1.2.4.2=COMPOSITE SECTION PROPERTIES FOR N = 21.00
****

SP NO	IN NO	D FROM SUPT (ft)	MOMENT OF INERTIA Ix (in**4)	Q/Ix Q=1ST. MOMENT OF INERTIA (1/in)	ELASTIC SECTION MODULUS,(in**3) STEEL BOT.	STEEL TOP.	CONCRETE(SLAB) TOP.
1	0	0.00	203195.0	0.008110	3957.1	7000.5	5092.5
1	1	9.45	203195.0	0.008110	3957.1	7000.5	5092.5
1	2	18.91	203195.0	0.008110	3957.1	7000.5	5092.5
1	3	28.36	203195.0	0.008110	3957.1	7000.5	5092.5
1	4	37.82	203195.0	0.008110	3957.1	7000.5	5092.5
1	5	47.28	241690.1	0.007555	5030.3	7334.4	5530.3
1	6	56.73	241690.1	0.007555	5030.3	7334.4	5530.3
1	7	66.19	241690.1	0.007555	5030.3	7334.4	5530.3
1	8	75.64	241690.1	0.007555	5030.3	7334.4	5530.3
1	9	85.10	241690.1	0.007555	5030.3	7334.4	5530.3
1	10	94.55	241690.1	0.007555	5030.3	7334.4	5530.3
1	11	104.01	241690.1	0.007555	5030.3	7334.4	5530.3
1	12	113.46	241690.1	0.007555	5030.3	7334.4	5530.3
1	13	122.92	241690.1	0.007555	5030.3	7334.4	5530.3
1	14	132.37	241690.1	0.007555	5030.3	7334.4	5530.3
1	15	141.83	241690.1	0.007555	5030.3	7334.4	5530.3

1	16	151.28	203195.0	0.008110	3957.1	7000.5	5092.5
1	17	160.74	203195.0	0.008110	3957.1	7000.5	5092.5
1	18	170.19	203195.0	0.008110	3957.1	7000.5	5092.5
1	19	179.65	203195.0	0.008110	3957.1	7000.5	5092.5
1	20	189.10	203195.0	0.008110	3957.1	7000.5	5092.5

1

TABLE 1.2.4.3=COMPOSITE SECTION PROPERTIES FOR N = 7.00
****

SP NO	IN NO	D FROM L SUPT (ft)	MOMENT OF INERTIA Ix (in**4)	Q/Ix Q=1ST. MOMENT OF INERTIA (1/in)	ELASTIC SECTION MODULUS,(in**3) STEEL BOT.	STEEL TOP.	CONCRETE(SLAB) TOP.
1	0	0.00	276082.3	0.011309	4293.2	17181.5	10246.7
1	1	9.45	276082.3	0.011309	4293.2	17181.5	10246.7
1	2	18.91	276082.3	0.011309	4293.2	17181.5	10246.7
1	3	28.36	276082.3	0.011309	4293.2	17181.5	10246.7
1	4	37.82	276082.3	0.011309	4293.2	17181.5	10246.7
1	5	47.28	334170.1	0.010759	5438.9	17084.9	11025.3
1	6	56.73	334170.1	0.010759	5438.9	17084.9	11025.3
1	7	66.19	334170.1	0.010759	5438.9	17084.9	11025.3
1	8	75.64	334170.1	0.010759	5438.9	17084.9	11025.3
1	9	85.10	334170.1	0.010759	5438.9	17084.9	11025.3
1	10	94.55	334170.1	0.010759	5438.9	17084.9	11025.3
1	11	104.01	334170.1	0.010759	5438.9	17084.9	11025.3
1	12	113.46	334170.1	0.010759	5438.9	17084.9	11025.3
1	13	122.92	334170.1	0.010759	5438.9	17084.9	11025.3
1	14	132.37	334170.1	0.010759	5438.9	17084.9	11025.3
1	15	141.83	334170.1	0.010759	5438.9	17084.9	11025.3
1	16	151.28	276082.3	0.011309	4293.2	17181.5	10246.7
1	17	160.74	276082.3	0.011309	4293.2	17181.5	10246.7
1	18	170.19	276082.3	0.011309	4293.2	17181.5	10246.7
1	19	179.65	276082.3	0.011309	4293.2	17181.5	10246.7
1	20	189.10	276082.3	0.011309	4293.2	17181.5	10246.7

Please read NOTE on the following page

1

NOTE [1] If the section modulus for the top flange indicates overflows (***), the neutral axis may be very closed to the top of the top flange.

[2] The section properties shown in this table are used for the calculation of stresses.

[3] AASHTO Art.10.38.1.6 or LRFD Art.6.10.1.1 --- Composite sections in simple spans and the positive moment regions of continuous spans should preferably be proportioned so that the neutral axis lies below the top surface of the steel beam. Concrete 'on the tension side of the neutral axis shall not be considered in calculating resulting moments. In the negative moment regions of continuous spans, only the slab reinforcement can be considered to act compositely with the steel beams in calculating resisting moments. Mechanical anchorages shall be provided in the composite regions to develop stresses on the plane joining the concrete and the steel. Concrete on the tension side of the neutral axis may be considered in computing moments of inertia for deflections and for determining stiffness factors used in calculating moments and shears

1

TABLE 1.2.5.1=NONCOMPOSITE DEAD LOAD MOMENTS FOR N=INFINITY (UNFACTORED)
****

SP NO	IN NO	D FROM L SUPT (ft)	DEAD LOAD BEAM (k-ft)	DEAD LOAD SLAB (k-ft)	CONCENTRATED LOADS (k-ft)	UNIFORM LOADS (k-ft)	TOTAL (k-ft) NONCOMPOSITE DEAD	TOTAL (k-ft) NONCOMPOSITE LOAD
1	0	0.00	0.0	0.0	0.0	0.0	0.0	
1	1	9.45	388.7	1258.8	0.0	0.0	1647.5	
1	2	18.91	736.5	2385.1	0.0	0.0	3121.6	
1	3	28.36	1043.4	3378.8	0.0	0.0	4422.2	
1	4	37.82	1309.4	4240.1	0.0	0.0	5549.5	
1	5	47.28	1534.4	4968.9	0.0	0.0	6503.3	
1	6	56.73	1718.5	5565.1	0.0	0.0	7283.7	
1	7	66.19	1861.8	6028.9	0.0	0.0	7890.7	
1	8	75.64	1964.0	6360.2	0.0	0.0	8324.2	
1	9	85.10	2025.4	6558.9	0.0	0.0	8584.3	
1	10	94.55	2045.9	6625.2	0.0	0.0	8671.1	
1	11	104.01	2025.4	6558.9	0.0	0.0	8584.3	
1	12	113.46	1964.1	6360.2	0.0	0.0	8324.2	

1	13	122.92	1861.8	6028.9	0.0	0.0	7890.7
1	14	132.37	1718.5	5565.1	0.0	0.0	7283.7
1	15	141.83	1534.4	4968.9	0.0	0.0	6503.3
1	16	151.28	1309.4	4240.1	0.0	0.0	5549.5
1	17	160.74	1043.4	3378.8	0.0	0.0	4422.3
1	18	170.19	736.5	2385.1	0.0	0.0	3121.6
1	19	179.65	388.7	1258.8	0.0	0.0	1647.5
1	20	189.10	0.0	0.0	0.0	0.0	0.0

1

TABLE 1.2.5.2=COMPOSITE DEAD LOAD MOMENTS FOR N = 21.00 (UNFACTORED)
****

SP NO	IN NO	D FROM L SUPT (ft)	UNIFORM SUPERIMPOSED DEAD LOAD (k-ft) DW	DC2	CONCENTRATED LOADS (k-ft) DW	DC2	OTHER UNIFORM LOADS	TOTAL (k-ft) -- COMPOSITE DEAD LOAD
1	0	0.00	0.0	0.0	0.0	0.0	0.0	0.0
1	1	9.45	0.0	163.5	0.0	0.0	0.0	163.5
1	2	18.91	0.0	309.7	0.0	0.0	0.0	309.7
1	3	28.36	0.0	438.7	0.0	0.0	0.0	438.7
1	4	37.82	0.0	550.6	0.0	0.0	0.0	550.6
1	5	47.28	0.0	645.2	0.0	0.0	0.0	645.2
1	6	56.73	0.0	722.6	0.0	0.0	0.0	722.6
1	7	66.19	0.0	782.8	0.0	0.0	0.0	782.8
1	8	75.64	0.0	825.9	0.0	0.0	0.0	825.9
1	9	85.10	0.0	851.7	0.0	0.0	0.0	851.7
1	10	94.55	0.0	860.3	0.0	0.0	0.0	860.3
1	11	104.01	0.0	851.7	0.0	0.0	0.0	851.7
1	12	113.46	0.0	825.9	0.0	0.0	0.0	825.9
1	13	122.92	0.0	782.8	0.0	0.0	0.0	782.8
1	14	132.37	0.0	722.6	0.0	0.0	0.0	722.6
1	15	141.83	0.0	645.2	0.0	0.0	0.0	645.2
1	16	151.28	0.0	550.6	0.0	0.0	0.0	550.6
1	17	160.74	0.0	438.7	0.0	0.0	0.0	438.7
1	18	170.19	0.0	309.7	0.0	0.0	0.0	309.7
1	19	179.65	0.0	163.5	0.0	0.0	0.0	163.5
1	20	189.10	0.0	0.0	0.0	0.0	0.0	0.0

1

TABLE 1.2.5.3=COMPOSITE LIVE LOAD MOMENTS FOR N = 7.00 (UNFACTORED)
****

SP NO	IN NO	D FROM L SUPT (ft)	SIDEWALK (MAXIMUM) POSITIVE (k-ft)	SIDEWALK (MAXIMUM) NEGATIVE (k-ft)	LL+I ,(k-ft), LOAD TYPE= HL -93 MAXIMUM POSITIVE	GOVERN. LOAD TYPE	MAXIMUM NEGATIVE	GOVERN. LOAD TYPE
1	0	0.00	0.0	0.0	0.0	SP.V	0.0	SP.V
1	1	9.45	0.0	0.0	1026.0	SP.V	0.0	SP.V
1	2	18.91	0.0	0.0	1938.1	SP.V	0.0	SP.V
1	3	28.36	0.0	0.0	2736.3	SP.V	0.0	SP.V
1	4	37.82	0.0	0.0	3420.5	SP.V	0.0	SP.V
1	5	47.28	0.0	0.0	3986.2	SP.V	0.0	SP.V
1	6	56.73	0.0	0.0	4447.3	SP.V	0.0	SP.V
1	7	66.19	0.0	0.0	4806.2	SP.V	0.0	SP.V
1	8	75.64	0.0	0.0	5055.8	SP.V	0.0	SP.V
1	9	85.10	0.0	0.0	5184.5	SP.V	0.0	SP.V
1	10	94.55	0.0	0.0	5227.4	SP.V	0.0	SP.V
1	11	104.01	0.0	0.0	5184.5	SP.V	0.0	SP.V
1	12	113.46	0.0	0.0	5055.8	SP.V	0.0	SP.V
1	13	122.92	0.0	0.0	4806.2	SP.V	0.0	SP.V
1	14	132.37	0.0	0.0	4447.3	SP.V	0.0	SP.V
1	15	141.83	0.0	0.0	3986.2	SP.V	0.0	SP.V
1	16	151.28	0.0	0.0	3420.5	SP.V	0.0	SP.V
1	17	160.74	0.0	0.0	2736.3	SP.V	0.0	SP.V
1	18	170.19	0.0	0.0	1938.1	SP.V	0.0	SP.V
1	19	179.65	0.0	0.0	1026.0	SP.V	0.0	SP.V
1	20	189.10	0.0	0.0	0.0	SP.V	0.0	SP.V

TABLE 1.2.5.4=MOMENT SUMMARY FOR COMPOSITE CONSTRUCTION (UNFACTORED)
****

SP NO	IN NO	D FROM L SUPT (ft)	DEAD LOAD NON COMP. N=Infin. (k-ft)	DEAD LOAD COMP. N=21.0 (k-ft)	LL+I:N= 7.0 LOAD TYPE= HL - 93 MAXIMUM POSITIVE (k-ft)	GOVERN LOAD TYPE	MAXIMUM NEGATIVE (k-ft)	GOVERN LOAD TYPE	TOTAL MAXIMUM POSITIVE (k-ft)	TOTAL MAXIMUM NEGATIVE (k-ft)
1	0	0.00	0.0	0.0	0.0	SP.V	0.0	SP.V	0.0	0.0
1	1	9.45	1647.5	163.5	1026.0	SP.V	0.0	SP.V	2837.0	1810.9
1	2	18.91	3121.6	309.7	1938.1	SP.V	0.0	SP.V	5369.4	3431.3
1	3	28.36	4422.2	438.7	2736.3	SP.V	0.0	SP.V	7597.3	4861.0

1	4	37.82	5549.5	550.6	3420.5	SP.V	0.0	SP.V	9520.6	6100.0
1	5	47.28	6503.3	645.2	3986.2	SP.V	0.0	SP.V	11134.7	7148.5
1	6	56.73	7283.7	722.6	4447.3	SP.V	0.0	SP.V	12453.6	8006.3
1	7	66.19	7890.7	782.8	4806.2	SP.V	0.0	SP.V	13479.7	8673.5
1	8	75.64	8324.2	825.9	5055.8	SP.V	0.0	SP.V	14205.9	9150.1
1	9	85.10	8584.3	851.7	5184.5	SP.V	0.0	SP.V	14620.6	9436.0
1	10	94.55	8671.1	860.3	5227.4	SP.V	0.0	SP.V	14758.8	9531.3
1	11	104.01	8584.3	851.7	5184.5	SP.V	0.0	SP.V	14620.6	9436.0
1	12	113.46	8324.2	825.9	5055.8	SP.V	0.0	SP.V	14205.9	9150.1
1	13	122.92	7890.7	782.8	4806.2	SP.V	0.0	SP.V	13479.7	8673.5
1	14	132.37	7283.7	722.6	4447.3	SP.V	0.0	SP.V	12453.6	8006.3
1	15	141.83	6503.3	645.2	3986.2	SP.V	0.0	SP.V	11134.7	7148.5
1	16	151.28	5549.5	550.6	3420.5	SP.V	0.0	SP.V	9520.6	6100.1
1	17	160.74	4422.3	438.7	2736.3	SP.V	0.0	SP.V	7597.3	4861.0
1	18	170.19	3121.6	309.7	1938.1	SP.V	0.0	SP.V	5369.4	3431.3
1	19	179.65	1647.5	163.5	1026.0	SP.V	0.0	SP.V	2837.0	1811.0
1	20	189.10	0.0	0.0	0.0	SP.V	0.0	SP.V	0.0	0.0

1

TABLE 1.2.5.5=MOMENT SUMMARY FOR COMPOSITE CONSTRUCTION (LRFD)
****

SP NO	IN NO	D FROM L SUPT (ft)	SERVICE I (k-ft)	SERVICE II (k-ft)	STRENGTH I (k-ft)	STRENGTH II (k-ft)	STRENGTH IV (k-ft)	FATIGUE RANGE (k-ft)
1	0	0.00	0.0	0.0	0.0	0.0	0.0	0.0
1	1	9.45	2734.4	2734.4	3648.8	3648.8	2716.4	0.0
1	2	18.91	5175.6	5175.6	6905.5	6905.5	5146.9	0.0
1	3	28.36	7323.6	7323.6	9770.2	9770.2	7291.5	0.0
1	4	37.82	9178.5	9178.5	12242.8	12242.8	9150.1	0.0
1	5	47.28	10736.1	10736.1	14317.0	14317.0	10722.7	0.0
1	6	56.73	12008.9	12008.9	16011.7	16011.7	12009.5	0.0
1	7	66.19	12999.1	12999.1	17330.2	17330.2	13010.3	0.0
1	8	75.64	13700.3	13700.3	18263.0	18263.0	13725.1	0.0
1	9	85.10	14102.1	14102.1	18794.1	18794.1	14154.0	0.0
1	10	94.55	14236.0	14236.0	18971.2	18971.2	14297.0	0.0
1	11	104.01	14102.1	14102.1	18794.2	18794.2	14154.0	0.0
1	12	113.46	13700.3	13700.3	18263.0	18263.0	13725.1	0.0
1	13	122.92	12999.1	12999.1	17330.2	17330.2	13010.3	0.0
1	14	132.37	12008.9	12008.9	16011.7	16011.7	12009.5	0.0
1	15	141.83	10736.1	10736.1	14317.0	14317.0	10722.8	0.0
1	16	151.28	9178.5	9178.5	12242.8	12242.8	9150.1	0.0
1	17	160.74	7323.6	7323.6	9770.2	9770.2	7291.5	0.0
1	18	170.19	5175.6	5175.6	6905.6	6905.6	5146.9	0.0
1	19	179.65	2734.4	2734.4	3648.8	3648.8	2716.5	0.0
1	20	189.10	0.0	0.0	0.0	0.0	0.0	0.0

TABLE 1.2.6.1=NONCOMPOSITE DEAD LOAD SHEAR FOR N=INFINITY (UNFACTORED)
****

SPAN NO.	IN NO	DIST FROM LEFT SUPT (ft)	STEEL BEAM (kip)	CONC. SLAB (kip)	CONCENT. LOAD (kip)	OTHER UNIFORM LOAD (kip)	TOTAL NONCOMPOSITE DEAD LOAD (kip)
1	0	0.00	43.3	140.1	0.0	0.0	183.4
1	1	9.45	38.9	126.1	0.0	0.0	165.1
1	2	18.91	34.6	112.1	0.0	0.0	146.7
1	3	28.36	30.3	98.1	0.0	0.0	128.4
1	4	37.82	26.0	84.1	0.0	0.0	110.1
1	5	47.28	21.6	70.1	0.0	0.0	91.7
1	6	56.73	17.3	56.1	0.0	0.0	73.4
1	7	66.19	13.0	42.0	0.0	0.0	55.0
1	8	75.64	8.7	28.0	0.0	0.0	36.7
1	9	85.10	4.3	14.0	0.0	0.0	18.3
1	10	94.55	0.0	0.0	0.0	0.0	0.0
1	11	104.01	-4.3	-14.0	0.0	0.0	-18.3
1	12	113.46	-8.7	-28.0	0.0	0.0	-36.7
1	13	122.92	-13.0	-42.0	0.0	0.0	-55.0
1	14	132.37	-17.3	-56.1	0.0	0.0	-73.4
1	15	141.83	-21.6	-70.1	0.0	0.0	-91.7
1	16	151.28	-26.0	-84.1	0.0	0.0	-110.1
1	17	160.74	-30.3	-98.1	0.0	0.0	-128.4
1	18	170.19	-34.6	-112.1	0.0	0.0	-146.7
1	19	179.65	-38.9	-126.1	0.0	0.0	-165.1
1	20	189.10	-43.3	-140.1	0.0	0.0	-183.4

TABLE 1.2.6.2=NONCOMPOSITE AND COMPOSITE DEAD LOAD SHEAR SUMMARY (UNFACTORED)
****

SP IN D FROM	COMPOSITE (k)	TOTAL	TOTAL DEAD LOADS

NO	NO	L SUPT (ft)	UNIFORM LOADS DW	UNIFORM LOADS DC2	CONCENTRATED LOADS DW	CONCENTRATED LOADS DC2	COMPOSITE (k)	NONCOMPOSITE (k)	----------
1	0	0.00	0.0	18.2	0.0	0.0	18.2	183.4	201.6
1	1	9.45	0.0	16.4	0.0	0.0	16.4	165.1	181.5
1	2	18.91	0.0	14.6	0.0	0.0	14.6	146.7	161.3
1	3	28.36	0.0	12.7	0.0	0.0	12.7	128.4	141.1
1	4	37.82	0.0	10.9	0.0	0.0	10.9	110.1	121.0
1	5	47.28	0.0	9.1	0.0	0.0	9.1	91.7	100.8
1	6	56.73	0.0	7.3	0.0	0.0	7.3	73.4	80.6
1	7	66.19	0.0	5.5	0.0	0.0	5.5	55.0	60.5
1	8	75.64	0.0	3.6	0.0	0.0	3.6	36.7	40.3
1	9	85.10	0.0	1.8	0.0	0.0	1.8	18.3	20.2
1	10	94.55	0.0	0.0	0.0	0.0	0.0	0.0	0.0
1	11	104.01	0.0	-1.8	0.0	0.0	-1.8	-18.3	-20.2
1	12	113.46	0.0	-3.6	0.0	0.0	-3.6	-36.7	-40.3
1	13	122.92	0.0	-5.5	0.0	0.0	-5.5	-55.0	-60.5
1	14	132.37	0.0	-7.3	0.0	0.0	-7.3	-73.4	-80.6
1	15	141.83	0.0	-9.1	0.0	0.0	-9.1	-91.7	-100.8
1	16	151.28	0.0	-10.9	0.0	0.0	-10.9	-110.1	-121.0
1	17	160.74	0.0	-12.7	0.0	0.0	-12.7	-128.4	-141.1
1	18	170.19	0.0	-14.6	0.0	0.0	-14.6	-146.7	-161.3
1	19	179.65	0.0	-16.4	0.0	0.0	-16.4	-165.1	-181.5
1	20	189.10	0.0	-18.2	0.0	0.0	-18.2	-183.4	-201.6

1

TABLE 1.2.6.3=LIVE LOAD SHEAR FOR N = 7.0 (UNFACTORED)
****

SP NO	IN NO	D FROM L SUPT (ft)	SIDEWALK (MAXIMUM) POSITIVE (kips)	SIDEWALK (MAXIMUM) NEGATIVE (kips)	LL+I ,(kips), LOAD TYPE= HL -93 MAXIMUM POSITIVE	GOVERN. LOAD TYPE	MAXIMUM NEGATIVE	GOVERN. LOAD TYPE
1	0	0.00	0.0	0.0	166.0	SP.V	0.0	SP.V
1	1	9.45	0.0	0.0	149.2	SP.V	-3.7	SP.V
1	2	18.91	0.0	0.0	135.9	SP.V	-8.9	SP.V
1	3	28.36	0.0	0.0	128.0	SP.V	-16.4	SP.V
1	4	37.82	0.0	0.0	120.0	SP.V	-24.1	SP.V
1	5	47.28	0.0	0.0	112.0	SP.V	-32.1	SP.V
1	6	56.73	0.0	0.0	104.0	SP.V	-40.1	SP.V
1	7	66.19	0.0	0.0	96.0	SP.V	-48.0	SP.V
1	8	75.64	0.0	0.0	88.0	SP.V	-56.0	SP.V
1	9	85.10	0.0	0.0	80.0	SP.V	-64.0	SP.V
1	10	94.55	0.0	0.0	72.0	SP.V	-72.0	SP.V
1	11	104.01	0.0	0.0	64.0	SP.V	-80.0	SP.V

1	12	113.46	0.0	0.0	56.0	SP.V	-88.0	SP.V
1	13	122.92	0.0	0.0	48.0	SP.V	-96.0	SP.V
1	14	132.37	0.0	0.0	40.1	SP.V	-104.0	SP.V
1	15	141.83	0.0	0.0	32.1	SP.V	-112.0	SP.V
1	16	151.28	0.0	0.0	24.1	SP.V	-120.0	SP.V
1	17	160.74	0.0	0.0	16.4	SP.V	-128.0	SP.V
1	18	170.19	0.0	0.0	8.9	SP.V	-135.9	SP.V
1	19	179.65	0.0	0.0	3.7	SP.V	-149.2	SP.V
1	20	189.10	0.0	0.0	0.0	SP.V	-166.0	SP.V

TABLE 1.2.6.4=SHEAR SUMMARY FOR COMPOSITE CONSTRUCTION (UNFACTORED)
****

SP NO	IN D NO	FROM L SUPT (ft)	TOTAL DEAD LOADS (k)	TOTAL L+I , LOAD TYPE = HL - 93 POSITIVE GOVERN. (k)	LOAD TYPE	NEGATIVE GOVERN. (k)	LOAD TYPE	MAX. SHEAR (kips) POS.	NEG.
1	0	0.00	201.6	166.0	SP.V	0.0	SP.V	367.6	201.6
1	1	9.45	181.5	149.2	SP.V	-3.7	SP.V	330.7	177.8
1	2	18.91	161.3	135.9	SP.V	-8.9	SP.V	297.2	152.4
1	3	28.36	141.1	128.0	SP.V	-16.4	SP.V	269.1	124.7
1	4	37.82	121.0	120.0	SP.V	-24.1	SP.V	240.9	96.9
1	5	47.28	100.8	112.0	SP.V	-32.1	SP.V	212.8	68.7
1	6	56.73	80.6	104.0	SP.V	-40.1	SP.V	184.6	40.6
1	7	66.19	60.5	96.0	SP.V	-48.0	SP.V	156.5	12.4
1	8	75.64	40.3	88.0	SP.V	-56.0	SP.V	128.3	-15.7
1	9	85.10	20.2	80.0	SP.V	-64.0	SP.V	100.2	-43.9
1	10	94.55	0.0	72.0	SP.V	-72.0	SP.V	72.0	-72.0
1	11	104.01	-20.2	64.0	SP.V	-80.0	SP.V	43.9	-100.2
1	12	113.46	-40.3	56.0	SP.V	-88.0	SP.V	15.7	-128.3
1	13	122.92	-60.5	48.0	SP.V	-96.0	SP.V	-12.4	-156.5
1	14	132.37	-80.6	40.1	SP.V	-104.0	SP.V	-40.6	-184.6
1	15	141.83	-100.8	32.1	SP.V	-112.0	SP.V	-68.7	-212.8
1	16	151.28	-121.0	24.1	SP.V	-120.0	SP.V	-96.9	-240.9
1	17	160.74	-141.1	16.4	SP.V	-128.0	SP.V	-124.7	-269.1
1	18	170.19	-161.3	8.9	SP.V	-135.9	SP.V	-152.4	-297.2
1	19	179.65	-181.5	3.7	SP.V	-149.2	SP.V	-177.8	-330.7
1	20	189.10	-201.6	0.0	SP.V	-166.0	SP.V	-201.6	-367.6

TABLE 1.2.6.5=SHEAR SUMMARY FOR COMPOSITE CONSTRUCTION (LRFD)
****

SP NO	IN NO	D FROM SUPT (ft)	SERVICE I (kips)	SERVICE II (kips)	STRENGTH I (kips)	STRENGTH II (kips)	STRENGTH IV (kips)	FATIGUE RANGE (kips)
1	0	0.00	351.0	351.0	476.1	476.1	302.4	0.0
1	1	9.45	315.8	315.8	428.3	428.3	272.2	0.0
1	2	18.91	283.6	283.6	385.1	385.1	241.9	0.0
1	3	28.36	256.3	256.3	349.2	349.2	211.7	0.0
1	4	37.82	228.9	228.9	313.2	313.2	181.5	0.0
1	5	47.28	201.6	201.6	277.2	277.2	151.2	0.0
1	6	56.73	174.2	174.2	241.2	241.2	121.0	0.0
1	7	66.19	146.9	146.9	205.2	205.2	90.7	0.0
1	8	75.64	119.5	119.5	169.2	169.2	60.5	0.0
1	9	85.10	92.2	92.2	133.2	133.2	30.2	0.0
1	10	94.55	64.8	64.8	97.2	97.2	0.0	0.0
1	11	104.01	-92.2	-92.2	-133.2	-133.2	-30.2	0.0
1	12	113.46	-119.5	-119.5	-169.2	-169.2	-60.5	0.0
1	13	122.92	-146.9	-146.9	-205.2	-205.2	-90.7	0.0
1	14	132.37	-174.2	-174.2	-241.2	-241.2	-121.0	0.0
1	15	141.83	-201.6	-201.6	-277.2	-277.2	-151.2	0.0
1	16	151.28	-228.9	-228.9	-313.2	-313.2	-181.5	0.0
1	17	160.74	-256.3	-256.3	-349.2	-349.2	-211.7	0.0
1	18	170.19	-283.6	-283.6	-385.1	-385.1	-241.9	0.0
1	19	179.65	-315.8	-315.8	-428.3	-428.3	-272.2	0.0
1	20	189.10	-351.0	-351.0	-476.1	-476.1	-302.4	0.0

1

BRIDGE ENGINEERING SOFTWARE & TECHNOLOGY CENTER
DEPARTMENT OF CIVIL & ENVIRON. ENGINEERING
UNIVERSITY OF MARYLAND

MERLIN V 9.0
COMPOSITE
LRF -- 2004
ANALYSIS

TABLE 1.2.7.2=SUMMARY OF REACTIONS (UNFACTORED)
****

SUPT NO.	TOTAL DEAD LOADS (K)	LL+I ,(K), LOAD TYPE = HL - 93 MINIMUM	GOVERN. LOAD TYPE	MAXIMUM	GOVERN. LOAD TYPE	TOTAL DL+LL+I (L R F D) MINIMUM	MAXIMUM
1	201.61	0.00	SP.V	166.02	SP.V	201.61	367.63
2	201.61	0.00	SP.V	166.02	SP.V	201.61	367.63

NOTE: [1] " - " Indicates Uplift

ST1 = STRENGTH I; ST2 = STRENGTH II; SE1 = SERVICE I;SE2 = SERVICE II.

1

TABLE 1.2.8.1=COMP AND NONCOMP DL DEFL FOR INFINITY AND N = 21.0 (UNFACTORED)
****

SP NO	IN D NO	FROM L SUPT (ft)	NONCOMPOSITE DL BEAM (in)	NONCOMPOSITE DL SLAB (in)	COMPOSITE DL CONCENTRATED (in)	COMPOSITE DL UNIFORM (in)	TOTAL NONCOMPOSITE (in)	TOTAL +COMPOSITE (in)	TOTAL = DL (in)
1	0	0.00	0.0000	0.0000	0.0000	0.0000	0.0000	0.0000	0.0000
1	1	9.45	-0.5125	-1.6597	0.0000	-0.1309	-2.1722	-0.1309	-2.3032
1	2	18.91	-1.0083	-3.2652	0.0000	-0.2576	-4.2736	-0.2576	-4.5312
1	3	28.36	-1.4723	-4.7677	0.0000	-0.3762	-6.2400	-0.3762	-6.6162
1	4	37.82	-1.8911	-6.1239	0.0000	-0.4834	-8.0150	-0.4834	-8.4984
1	5	47.28	-2.2571	-7.3092	0.0000	-0.5771	-9.5663	-0.5771	-10.1434
1	6	56.73	-2.5676	-8.3147	0.0000	-0.6566	-10.8823	-0.6566	-11.5389
1	7	66.19	-2.8160	-9.1191	0.0000	-0.7202	-11.9351	-0.7202	-12.6553
1	8	75.64	-2.9972	-9.7057	0.0000	-0.7666	-12.7029	-0.7666	-13.4694
1	9	85.10	-3.1073	-10.0625	0.0000	-0.7948	-13.1698	-0.7948	-13.9645
1	10	94.55	-3.1443	-10.1822	0.0000	-0.8042	-13.3265	-0.8042	-14.1307
1	11	104.01	-3.1073	-10.0625	0.0000	-0.7948	-13.1698	-0.7948	-13.9645
1	12	113.46	-2.9972	-9.7057	0.0000	-0.7666	-12.7029	-0.7666	-13.4694
1	13	122.92	-2.8160	-9.1191	0.0000	-0.7202	-11.9351	-0.7202	-12.6553
1	14	132.37	-2.5676	-8.3147	0.0000	-0.6566	-10.8823	-0.6566	-11.5389
1	15	141.83	-2.2571	-7.3092	0.0000	-0.5771	-9.5663	-0.5771	-10.1433
1	16	151.28	-1.8911	-6.1239	0.0000	-0.4834	-8.0150	-0.4834	-8.4984
1	17	160.74	-1.4723	-4.7677	0.0000	-0.3762	-6.2400	-0.3762	-6.6162
1	18	170.19	-1.0083	-3.2652	0.0000	-0.2576	-4.2736	-0.2576	-4.5312
1	19	179.65	-0.5125	-1.6597	0.0000	-0.1309	-2.1722	-0.1309	-2.3032
1	20	189.10	0.0000	0.0000	0.0000	0.0000	0.0000	0.0000	0.0000

NOTE: " - " Indicates downward deflections

NOTE: The total noncomposite DL deflection is the sum of the deflections due to beam, slab, arbitrary DL uniform load and arbitrary DL concentrated load.

NOTE: Due to space limit only beam deflections and slab deflections are printed out.

1

TABLE 1.2.8.1A=CAMBER INFORMATION (UNFACTORED)
****

SP NO	IN D NO L	FROM SUPT (ft)	NONCOMPOSITE DEAD LOADS (in) STEEL DEFL.	CAMBER SIZE	SLAB DEFL.	CAMBER SIZE	COMPOSITE DL (in) DEFL.	CAMBER SIZE	TOTAL (in) DEFL.	CAMBER SIZE
1	0	0.0	0.000	--	0.000	--	0.000	--	0.000	--
1	1	9.5	-0.513	0 9/16	-1.660	1 11/16	-0.131	0 3/16	-2.303	2 5/16
1	2	18.9	-1.008	1 1/16	-3.265	3 5/16	-0.258	0 5/16	-4.531	4 9/16
1	3	28.4	-1.472	1 1/ 2	-4.768	4 13/16	-0.376	0 7/16	-6.616	6 5/ 8
1	4	37.8	-1.891	1 15/16	-6.124	6 1/ 8	-0.483	0 1/ 2	-8.498	8 1/ 2
1	5	47.3	-2.257	2 5/16	-7.309	7 5/16	-0.577	0 5/ 8	-10.143	10 3/16
1	6	56.7	-2.568	2 5/ 8	-8.315	8 3/ 8	-0.657	0 11/16	-11.539	11 9/16
1	7	66.2	-2.816	2 7/ 8	-9.119	9 1/ 8	-0.720	0 3/ 4	-12.655	12 11/16
1	8	75.6	-2.997	3 0/16	-9.706	9 3/ 4	-0.767	0 13/16	-13.469	13 1/ 2
1	9	85.1	-3.107	3 1/ 8	-10.062	10 1/16	-0.795	0 13/16	-13.965	14 0/16
1	10	94.6	-3.144	3 3/16	-10.182	10 3/16	-0.804	0 13/16	-14.131	14 3/16
1	11	104.0	-3.107	3 1/ 8	-10.062	10 1/16	-0.795	0 13/16	-13.965	14 0/16
1	12	113.5	-2.997	3 0/16	-9.706	9 3/ 4	-0.767	0 13/16	-13.469	13 1/ 2
1	13	122.9	-2.816	2 7/ 8	-9.119	9 1/ 8	-0.720	0 3/ 4	-12.655	12 11/16
1	14	132.4	-2.568	2 5/ 8	-8.315	8 3/ 8	-0.657	0 11/16	-11.539	11 9/16
1	15	141.8	-2.257	2 5/16	-7.309	7 5/16	-0.577	0 5/ 8	-10.143	10 3/16
1	16	151.3	-1.891	1 15/16	-6.124	6 1/ 8	-0.483	0 1/ 2	-8.498	8 1/ 2
1	17	160.7	-1.472	1 1/ 2	-4.768	4 13/16	-0.376	0 7/16	-6.616	6 5/ 8
1	18	170.2	-1.008	1 1/16	-3.265	3 5/16	-0.258	0 5/16	-4.531	4 9/16
1	19	179.6	-0.513	0 9/16	-1.660	1 11/16	-0.131	0 3/16	-2.303	2 5/16
1	20	189.1	0.000	--	0.000	--	0.000	--	0.000	--

NOTE: for camber, please refer to AASHTO Art.10.14 or LRFD Art. 6.7.2

1

TABLE 1.2.8.2=MAXIMUM LIVE LOAD DEFLECTION FOR COMPOSITE CONSTRUCTION
****
(UNFACTORED)

SPAN NO.	D FROM L SUPT (ft)	NUMBER OF LANE AND DIST. FOR LL	FACTOR DEFL.	LL + I. DEFLECTION (inch)	GOVERN. LOAD TYPE	1/800 OF SPAN L AASHTO 2.5.2.6.2	ROTATION [5] Rad.
1	94.55	11	0.550	-2.207	SP.V	2.84	0.00000
		12	0.600	-2.407	SP.V	2.84	0.00000

NOTE: [1] " - " indicates downward deflection

[2] The distribution factor for LL+I deflection is defined as

DF = (NL/Ng)*(RF)lane ..... AASHTO LRFD Art. 2.5.2.6

where NL= no. of traffic lanes
Ng= no. of girders
(RF)lane = reduction factor from AASHTO LRFD Art. 3.6.1.1.2

[3] This table may be replaced by the optional criteria specified in AASHTO LRFD Art. 3.6.1.3.2

[4] The number of traffic lanes is determined according to AASHTO LRFD Art.3.6.1.1.1

[5] Max rotations at left (1st line) & right (2nd line) supports of the span without averaging, factor and impact

1

TABLE 1.2.9.1=NONCOMPOSITE DEAD LOAD STRESSES FOR N=INFINITY (UNFACTORED)
****

SP NO	IN D NO	FROM L SUPT (ft)	STEEL DEAD LOAD STEEL BEAM TOP (ksi)	STEEL DEAD LOAD STEEL BEAM BOT (ksi)	OTHER DEAD LOAD STEEL BEAM TOP (ksi)	OTHER DEAD LOAD STEEL BEAM BOT (ksi)	TOTAL DEAD LOAD STEEL BEAM TOP (ksi)	TOTAL DEAD LOAD STEEL BEAM BOT (ksi)
1	0	0.00	0.00	0.00	0.00	0.00	0.00	0.00
1	1	9.45	-1.65	1.41	-5.34	4.55	-7.00	5.96
1	2	18.91	-3.13	2.66	-10.13	8.62	-13.25	11.29
1	3	28.36	-4.43	3.77	-14.35	12.22	-18.78	15.99
1	4	37.82	-5.56	4.73	-18.00	15.33	-23.56	20.06
1	5	47.28	-5.84	4.29	-18.92	13.90	-24.77	18.19
1	6	56.73	-6.54	4.81	-21.19	15.57	-27.74	20.38
1	7	66.19	-7.09	5.21	-22.96	16.87	-30.05	22.07
1	8	75.64	-7.48	5.49	-24.22	17.79	-31.70	23.29
1	9	85.10	-7.71	5.67	-24.98	18.35	-32.69	24.01
1	10	94.55	-7.79	5.72	-25.23	18.53	-33.02	24.26
1	11	104.01	-7.71	5.67	-24.98	18.35	-32.69	24.01
1	12	113.46	-7.48	5.49	-24.22	17.79	-31.70	23.29
1	13	122.92	-7.09	5.21	-22.96	16.87	-30.05	22.07
1	14	132.37	-6.54	4.81	-21.19	15.57	-27.74	20.38
1	15	141.83	-5.84	4.29	-18.92	13.90	-24.77	18.19
1	16	151.28	-5.56	4.73	-18.00	15.33	-23.56	20.06
1	17	160.74	-4.43	3.77	-14.35	12.22	-18.78	15.99
1	18	170.19	-3.13	2.66	-10.13	8.62	-13.25	11.29
1	19	179.65	-1.65	1.41	-5.34	4.55	-7.00	5.96
1	20	189.10	0.00	0.00	0.00	0.00	0.00	0.00

TABLE 1.2.9.2=COMPOSITE DL STRESS FOR N = 21.0 AND TOTAL DL STRESSES
****
(UNFACTORED)

SP NO	IN NO	D FROM L SUPT (ft)	SUPERIMPOSED DEAD LOAD,(ksi) CONCRETE TOP	STEEL BEAM TOP	STEEL BEAM BOT	TOTAL DEAD LOAD,(ksi) CONCRETE TOP	STEEL BEAM TOP	STEEL BEAM BOT
1	0	0.00	0.00	0.00	0.00	0.00	0.00	0.00
1	1	9.45	-0.02	-0.28	0.50	-0.02	-7.28	6.45
1	2	18.91	-0.03	-0.53	0.94	-0.03	-13.79	12.22
1	3	28.36	-0.05	-0.75	1.33	-0.05	-19.53	17.32
1	4	37.82	-0.06	-0.94	1.67	-0.06	-24.51	21.73
1	5	47.28	-0.07	-1.06	1.54	-0.07	-25.82	19.73
1	6	56.73	-0.07	-1.18	1.72	-0.07	-28.92	22.10
1	7	66.19	-0.08	-1.28	1.87	-0.08	-31.33	23.94
1	8	75.64	-0.09	-1.35	1.97	-0.09	-33.05	25.26
1	9	85.10	-0.09	-1.39	2.03	-0.09	-34.08	26.05
1	10	94.55	-0.09	-1.41	2.05	-0.09	-34.43	26.31
1	11	104.01	-0.09	-1.39	2.03	-0.09	-34.08	26.05
1	12	113.46	-0.09	-1.35	1.97	-0.09	-33.05	25.26
1	13	122.92	-0.08	-1.28	1.87	-0.08	-31.33	23.94
1	14	132.37	-0.07	-1.18	1.72	-0.07	-28.92	22.10
1	15	141.83	-0.07	-1.06	1.54	-0.07	-25.82	19.73
1	16	151.28	-0.06	-0.94	1.67	-0.06	-24.51	21.73
1	17	160.74	-0.05	-0.75	1.33	-0.05	-19.53	17.32
1	18	170.19	-0.03	-0.53	0.94	-0.03	-13.79	12.22
1	19	179.65	-0.02	-0.28	0.50	-0.02	-7.28	6.45
1	20	189.10	0.00	0.00	0.00	0.00	0.00	0.00

TABLE 1.2.9.3=LIVE LOAD STRESSES FOR N = 7.0 (UNFACTORED)
****

SP NO	IN NO	D FROM L SUPT (ft)	MAXIMUM POSITIVE,(ksi) CONCR. TOP	STEEL TOP	STEEL BOT	MAXIMUM NEGATIVE,(ksi) CONCR. TOP	STEEL TOP	STEEL BOT	STRESS RANGE STEEL TOP	STEEL BOT

1	0	0.00	0.00	0.00	0.00	0.00	0.00	0.00	0.00	0.00
1	1	9.45	-0.17	-0.72	2.87	0.00	0.00	0.00	0.38	1.54
1	2	18.91	-0.32	-1.35	5.42	0.00	0.00	0.00	0.73	2.91
1	3	28.36	-0.46	-1.91	7.65	0.00	0.00	0.00	1.03	4.11
1	4	37.82	-0.57	-2.39	9.56	0.00	0.00	0.00	1.28	5.13
1	5	47.28	-0.62	-2.80	8.79	0.00	0.00	0.00	1.50	4.72
1	6	56.73	-0.69	-3.12	9.81	0.00	0.00	0.00	1.68	5.27
1	7	66.19	-0.75	-3.38	10.60	0.00	0.00	0.00	1.81	5.69
1	8	75.64	-0.79	-3.55	11.15	0.00	0.00	0.00	1.91	5.99
1	9	85.10	-0.81	-3.64	11.44	0.00	0.00	0.00	1.96	6.14
1	10	94.55	-0.81	-3.67	11.53	0.00	0.00	0.00	1.97	6.19
1	11	104.01	-0.81	-3.64	11.44	0.00	0.00	0.00	1.96	6.14
1	12	113.46	-0.79	-3.55	11.15	0.00	0.00	0.00	1.91	5.99
1	13	122.92	-0.75	-3.38	10.60	0.00	0.00	0.00	1.81	5.69
1	14	132.37	-0.69	-3.12	9.81	0.00	0.00	0.00	1.68	5.27
1	15	141.83	-0.62	-2.80	8.79	0.00	0.00	0.00	1.50	4.72
1	16	151.28	-0.57	-2.39	9.56	0.00	0.00	0.00	1.28	5.13
1	17	160.74	-0.46	-1.91	7.65	0.00	0.00	0.00	1.03	4.11
1	18	170.19	-0.32	-1.35	5.42	0.00	0.00	0.00	0.73	2.91
1	19	179.65	-0.17	-0.72	2.87	0.00	0.00	0.00	0.38	1.54
1	20	189.10	0.00	0.00	0.00	0.00	0.00	0.00	0.00	0.00

TABLE 1.2.9.5A=SERVICE I TOTAL (DC+DW+LL+I) STRESS SUMMARY
****

SP NO	IN NO	D FROM L SUPT (ft)	YIELD STRESS Fy (ksi) TOP	BOT	TOTAL POSITIVE ,(ksi) CONCR. TOP	STEEL BEAM TOP	STEEL BEAM BOT	TOTAL NEGATIVE ,(ksi) CONCR. TOP	STEEL BEAM TOP	STEEL BEAM BOT
1	0	0.00	50.	50.	0.00	0.00	0.00	0.00	0.00	0.00
1	1	9.45	50.	50.	-0.19	-7.99	9.32	-0.02	-7.28	6.45
1	2	18.91	50.	50.	-0.36	-15.14	17.64	-0.03	-13.79	12.22
1	3	28.36	50.	50.	-0.51	-21.44	24.97	-0.05	-19.53	17.32
1	4	37.82	50.	50.	-0.63	-26.90	31.29	-0.06	-24.51	21.73
1	5	47.28	50.	50.	-0.69	-28.62	28.53	-0.07	-25.82	19.73
1	6	56.73	50.	50.	-0.77	-32.04	31.91	-0.07	-28.92	22.10
1	7	66.19	50.	50.	-0.83	-34.71	34.54	-0.08	-31.33	23.94
1	8	75.64	50.	50.	-0.87	-36.60	36.41	-0.09	-33.05	25.26
1	9	85.10	50.	50.	-0.89	-37.73	37.48	-0.09	-34.08	26.05
1	10	94.55	50.	50.	-0.90	-38.10	37.84	-0.09	-34.43	26.31

1	11	104.01	50.	50.	-0.89	-37.73	37.48	-0.09	-34.08	26.05
1	12	113.46	50.	50.	-0.87	-36.60	36.41	-0.09	-33.05	25.26
1	13	122.92	50.	50.	-0.83	-34.71	34.55	-0.08	-31.33	23.94
1	14	132.37	50.	50.	-0.77	-32.04	31.91	-0.07	-28.92	22.10
1	15	141.83	50.	50.	-0.69	-28.62	28.53	-0.07	-25.82	19.73
1	16	151.28	50.	50.	-0.63	-26.90	31.29	-0.06	-24.51	21.73
1	17	160.74	50.	50.	-0.51	-21.44	24.97	-0.05	-19.53	17.32
1	18	170.19	50.	50.	-0.36	-15.14	17.64	-0.03	-13.79	12.22
1	19	179.65	50.	50.	-0.19	-7.99	9.32	-0.02	-7.28	6.45
1	20	189.10	50.	50.	0.00	0.00	0.00	0.00	0.00	0.00

1

TABLE 1.2.9.5B=SERVICE II TOTAL (DC+DW+1.3(LL+I)) STRESS SUMMARY
****

SP NO	IN NO	D FROM L SUPT (ft)	YIELD STRESS Fy (ksi) TOP	BOT	TOTAL POSITIVE ,(ksi) CONCR. TOP	STEEL BEAM TOP	STEEL BEAM BOT	TOTAL NEGATIVE ,(ksi) CONCR. TOP	STEEL BEAM TOP	STEEL BEAM BOT
1	0	0.00	50.	50.	0.00	0.00	0.00	0.00	0.00	0.00
1	1	9.45	50.	50.	-0.17	-7.92	9.03	-0.02	-7.28	6.45
1	2	18.91	50.	50.	-0.33	-15.00	17.10	-0.03	-13.79	12.22
1	3	28.36	50.	50.	-0.46	-21.25	24.20	-0.05	-19.53	17.32
1	4	37.82	50.	50.	-0.58	-26.66	30.34	-0.06	-24.51	21.73
1	5	47.28	50.	50.	-0.62	-28.34	27.65	-0.07	-25.82	19.73
1	6	56.73	50.	50.	-0.70	-31.73	30.93	-0.07	-28.92	22.10
1	7	66.19	50.	50.	-0.75	-34.37	33.48	-0.08	-31.33	23.94
1	8	75.64	50.	50.	-0.79	-36.25	35.30	-0.09	-33.05	25.26
1	9	85.10	50.	50.	-0.81	-37.36	36.34	-0.09	-34.08	26.05
1	10	94.55	50.	50.	-0.82	-37.73	36.69	-0.09	-34.43	26.31
1	11	104.01	50.	50.	-0.81	-37.36	36.34	-0.09	-34.08	26.05
1	12	113.46	50.	50.	-0.79	-36.25	35.30	-0.09	-33.05	25.26
1	13	122.92	50.	50.	-0.75	-34.37	33.48	-0.08	-31.33	23.94
1	14	132.37	50.	50.	-0.70	-31.73	30.93	-0.07	-28.92	22.10
1	15	141.83	50.	50.	-0.62	-28.34	27.65	-0.07	-25.82	19.73
1	16	151.28	50.	50.	-0.58	-26.66	30.34	-0.06	-24.51	21.73
1	17	160.74	50.	50.	-0.46	-21.25	24.20	-0.05	-19.53	17.32
1	18	170.19	50.	50.	-0.33	-15.00	17.10	-0.03	-13.79	12.22
1	19	179.65	50.	50.	-0.17	-7.92	9.03	-0.02	-7.28	6.45
1	20	189.10	50.	50.	0.00	0.00	0.00	0.00	0.00	0.00

1

TABLE 1.2.9.5C=STRENGTH I TOTAL (1.25DC+1.50DW+1.75(LL+I)) STRESS SUMMARY

SP NO	IN NO	D FROM L SUPT (ft)	YIELD STRESS Fy (ksi) TOP	BOT	TOTAL POSITIVE ,(ksi) CONCR. TOP	STEEL BEAM TOP	STEEL BEAM BOT	TOTAL NEGATIVE ,(ksi) CONCR. TOP	STEEL BEAM TOP	STEEL BEAM BOT
1	0	0.00	50.	50.	0.00	0.00	0.00	0.00	0.00	0.00
1	1	9.45	50.	50.	-0.25	-10.06	11.94	-0.02	-9.09	8.06
1	2	18.91	50.	50.	-0.48	-19.06	22.59	-0.04	-17.23	15.28
1	3	28.36	50.	50.	-0.68	-26.99	31.97	-0.06	-24.41	21.65
1	4	37.82	50.	50.	-0.85	-33.86	40.07	-0.08	-30.63	27.16
1	5	47.28	50.	50.	-0.92	-36.06	36.54	-0.08	-32.28	24.66
1	6	56.73	50.	50.	-1.03	-40.37	40.87	-0.09	-36.15	27.62
1	7	66.19	50.	50.	-1.11	-43.72	44.24	-0.10	-39.16	29.93
1	8	75.64	50.	50.	-1.17	-46.11	46.63	-0.11	-41.31	31.57
1	9	85.10	50.	50.	-1.20	-47.52	48.00	-0.11	-42.61	32.56
1	10	94.55	50.	50.	-1.21	-47.99	48.46	-0.11	-43.04	32.89
1	11	104.01	50.	50.	-1.20	-47.52	48.00	-0.11	-42.61	32.56
1	12	113.46	50.	50.	-1.17	-46.11	46.63	-0.11	-41.31	31.57
1	13	122.92	50.	50.	-1.11	-43.72	44.24	-0.10	-39.16	29.93
1	14	132.37	50.	50.	-1.03	-40.37	40.87	-0.09	-36.15	27.62
1	15	141.83	50.	50.	-0.92	-36.06	36.54	-0.08	-32.28	24.66
1	16	151.28	50.	50.	-0.85	-33.86	40.07	-0.08	-30.63	27.16
1	17	160.74	50.	50.	-0.68	-26.99	31.97	-0.06	-24.41	21.65
1	18	170.19	50.	50.	-0.48	-19.06	22.59	-0.04	-17.23	15.28
1	19	179.65	50.	50.	-0.25	-10.06	11.94	-0.02	-9.09	8.06
1	20	189.10	50.	50.	0.00	0.00	0.00	0.00	0.00	0.00

1

BRIDGE ENGINEERING SOFTWARE & TECHNOLOGY CENTER
DEPARTMENT OF CIVIL & ENVIRON. ENGINEERING
UNIVERSITY OF MARYLAND

MERLIN V 9.0
COMPOSITE
LRF -- 2004
ANALYSIS

TABLE 1.2.9.5D=STRENGTH I TOTAL (0.90DC+0.65DW+1.75(LL+I)) STRESS SUMMARY

SP NO	IN NO	D FROM L SUPT (ft)	YIELD STRESS Fy (ksi) TOP	BOT	TOTAL POSITIVE ,(ksi) CONCR. TOP	STEEL BEAM TOP	STEEL BEAM BOT	TOTAL NEGATIVE ,(ksi) CONCR. TOP	STEEL BEAM TOP	STEEL BEAM BOT
1	0	0.00	50.	50.	0.00	0.00	0.00	0.00	0.00	0.00
1	1	9.45	50.	50.	-0.25	-7.52	9.68	-0.02	-6.55	5.81
1	2	18.91	50.	50.	-0.47	-14.23	18.31	-0.03	-12.41	11.00
1	3	28.36	50.	50.	-0.66	-20.16	25.91	-0.04	-17.58	15.59
1	4	37.82	50.	50.	-0.83	-25.28	32.47	-0.06	-22.06	19.56
1	5	47.28	50.	50.	-0.90	-27.02	29.63	-0.06	-23.24	17.76
1	6	56.73	50.	50.	-1.00	-30.24	33.14	-0.07	-26.03	19.89

1	7	66.19	50.	50.	-1.08	-32.75	35.86	-0.07	-28.20	21.55
1	8	75.64	50.	50.	-1.14	-34.54	37.79	-0.08	-29.75	22.73
1	9	85.10	50.	50.	-1.17	-35.59	38.88	-0.08	-30.68	23.44
1	10	94.55	50.	50.	-1.18	-35.94	39.25	-0.08	-30.99	23.68
1	11	104.01	50.	50.	-1.17	-35.59	38.88	-0.08	-30.68	23.44
1	12	113.46	50.	50.	-1.14	-34.54	37.79	-0.08	-29.75	22.73
1	13	122.92	50.	50.	-1.08	-32.75	35.86	-0.07	-28.20	21.55
1	14	132.37	50.	50.	-1.00	-30.24	33.14	-0.07	-26.03	19.89
1	15	141.83	50.	50.	-0.90	-27.02	29.63	-0.06	-23.24	17.76
1	16	151.28	50.	50.	-0.83	-25.28	32.47	-0.06	-22.06	19.56
1	17	160.74	50.	50.	-0.66	-20.16	25.91	-0.04	-17.58	15.59
1	18	170.19	50.	50.	-0.47	-14.23	18.32	-0.03	-12.41	11.00
1	19	179.65	50.	50.	-0.25	-7.52	9.68	-0.02	-6.55	5.81
1	20	189.10	50.	50.	0.00	0.00	0.00	0.00	0.00	0.00

1

TABLE 1.2.9.5E=STRENGTH II TOTAL (1.25DC+1.50DW+1.35(LL+I)) STRESS SUMMARY
****

SP NO	IN NO	D FROM L SUPT (ft)	YIELD STRESS Fy (ksi) TOP	YIELD STRESS Fy (ksi) BOT	TOTAL POSITIVE ,(ksi) CONCR. TOP	TOTAL POSITIVE ,(ksi) STEEL BEAM TOP	TOTAL POSITIVE ,(ksi) STEEL BEAM BOT	TOTAL NEGATIVE ,(ksi) CONCR. TOP	TOTAL NEGATIVE ,(ksi) STEEL BEAM TOP	TOTAL NEGATIVE ,(ksi) STEEL BEAM BOT
1	0	0.00	50.	50.	0.00	0.00	0.00	0.00	0.00	0.00
1	1	9.45	50.	50.	-0.25	-10.06	11.94	-0.02	-9.09	8.06
1	2	18.91	50.	50.	-0.48	-19.06	22.59	-0.04	-17.23	15.28
1	3	28.36	50.	50.	-0.68	-26.99	31.97	-0.06	-24.41	21.65
1	4	37.82	50.	50.	-0.85	-33.86	40.07	-0.08	-30.63	27.16
1	5	47.28	50.	50.	-0.92	-36.06	36.54	-0.08	-32.28	24.66
1	6	56.73	50.	50.	-1.03	-40.37	40.87	-0.09	-36.15	27.62
1	7	66.19	50.	50.	-1.11	-43.72	44.24	-0.10	-39.16	29.93
1	8	75.64	50.	50.	-1.17	-46.11	46.63	-0.11	-41.31	31.57
1	9	85.10	50.	50.	-1.20	-47.52	48.00	-0.11	-42.61	32.56
1	10	94.55	50.	50.	-1.21	-47.99	48.46	-0.11	-43.04	32.89
1	11	104.01	50.	50.	-1.20	-47.52	48.00	-0.11	-42.61	32.56
1	12	113.46	50.	50.	-1.17	-46.11	46.63	-0.11	-41.31	31.57
1	13	122.92	50.	50.	-1.11	-43.72	44.24	-0.10	-39.16	29.93
1	14	132.37	50.	50.	-1.03	-40.37	40.87	-0.09	-36.15	27.62
1	15	141.83	50.	50.	-0.92	-36.06	36.54	-0.08	-32.28	24.66
1	16	151.28	50.	50.	-0.85	-33.86	40.07	-0.08	-30.63	27.16
1	17	160.74	50.	50.	-0.68	-26.99	31.97	-0.06	-24.41	21.65
1	18	170.19	50.	50.	-0.48	-19.06	22.59	-0.04	-17.23	15.28
1	19	179.65	50.	50.	-0.25	-10.06	11.94	-0.02	-9.09	8.06
1	20	189.10	50.	50.	0.00	0.00	0.00	0.00	0.00	0.00

1

TABLE 1.2.9.5F=STRENGTH II TOTAL (0.90DC+0.65DW+1.35(LL+I)) STRESS SUMMARY
****

SP NO	IN D NO	FROM L SUPT (ft)	YIELD STRESS Fy (ksi) TOP	BOT	TOTAL POSITIVE ,(ksi) CONCR. TOP	STEEL BEAM TOP	STEEL BEAM BOT	TOTAL NEGATIVE ,(ksi) CONCR. TOP	STEEL BEAM TOP	STEEL BEAM BOT
1	0	0.00	50.	50.	0.00	0.00	0.00	0.00	0.00	0.00
1	1	9.45	50.	50.	-0.25	-7.52	9.68	-0.02	-6.55	5.81
1	2	18.91	50.	50.	-0.47	-14.23	18.31	-0.03	-12.41	11.00
1	3	28.36	50.	50.	-0.66	-20.16	25.91	-0.04	-17.58	15.59
1	4	37.82	50.	50.	-0.83	-25.28	32.47	-0.06	-22.06	19.56
1	5	47.28	50.	50.	-0.90	-27.02	29.63	-0.06	-23.24	17.76
1	6	56.73	50.	50.	-1.00	-30.24	33.14	-0.07	-26.03	19.89
1	7	66.19	50.	50.	-1.08	-32.75	35.86	-0.07	-28.20	21.55
1	8	75.64	50.	50.	-1.14	-34.54	37.79	-0.08	-29.75	22.73
1	9	85.10	50.	50.	-1.17	-35.59	38.88	-0.08	-30.68	23.44
1	10	94.55	50.	50.	-1.18	-35.94	39.25	-0.08	-30.99	23.68
1	11	104.01	50.	50.	-1.17	-35.59	38.88	-0.08	-30.68	23.44
1	12	113.46	50.	50.	-1.14	-34.54	37.79	-0.08	-29.75	22.73
1	13	122.92	50.	50.	-1.08	-32.75	35.86	-0.07	-28.20	21.55
1	14	132.37	50.	50.	-1.00	-30.24	33.14	-0.07	-26.03	19.89
1	15	141.83	50.	50.	-0.90	-27.02	29.63	-0.06	-23.24	17.76
1	16	151.28	50.	50.	-0.83	-25.28	32.47	-0.06	-22.06	19.56
1	17	160.74	50.	50.	-0.66	-20.16	25.91	-0.04	-17.58	15.59
1	18	170.19	50.	50.	-0.47	-14.23	18.32	-0.03	-12.41	11.00
1	19	179.65	50.	50.	-0.25	-7.52	9.68	-0.02	-6.55	5.81
1	20	189.10	50.	50.	0.00	0.00	0.00	0.00	0.00	0.00

1

TABLE 1.2.10.1=STRESSES AT SECTION-CHANGE POINTS (UNFACTORED)
****

SP NO	JOINT TYPE	D FROM L SUPT (ft)	DL1, N=INF. MOM. (k-ft)	STRESS (ksi)	DL2, N=21.0 MOM. (k-ft)	STRESS (ksi)	POS. LL+I MOM. (k-ft)	STRESS (ksi)	NEG. LL+I MOM. (k-ft)	STRESS (ksi)	TOTAL STRESS --AND-- STRESS RANGE
1	LT	39.00	5669.	-24.1	562.	-1.0	3491.	-2.6	0.	0.0	-27.67
											2.60
	LB			20.5		1.7		9.6		0.0	31.85
											9.64

	RT		-21.6		-1.0		-2.6			0.0	-25.14
											2.60
	RB		15.9		1.4		7.6			0.0	24.81
											7.61
1	LT	150.10	5669. -21.6	562.	-1.0	3491.	-2.6		0.	0.0	-25.14
											2.60
	LB		15.9		1.4		7.6			0.0	24.81
											7.61
	RT		-24.1		-1.0		-2.6			0.0	-27.67
											2.60
	RB		20.5		1.7		9.6			0.0	31.85
											9.64

NOTE: LT = left-hand-side point, top of top flange
LB = left-hand-side point, bottom of bottom flange
RT = right-hand-side point, top of top flange
RB = right-hand-side point, bottom of bottom flange

1

BRIDGE ENGINEERING SOFTWARE & TECHNOLOGY CENTER
DEPARTMENT OF CIVIL & ENVIRON. ENGINEERING
UNIVERSITY OF MARYLAND

MERLIN V 9.0
COMPOSITE
LRF -- 2004
CODE CHECK
PAGE 49

TABLE 1.2.22.3=MEMBER LENGTH AND SECTION GEOMETRY
****

MEMBER		STEEL	TOP FLANGE		WEB		BOT FLANGE		COVER PLATE -- (in) TOP		BOT	
NO	LENGTH (ft)	TYPE	WIDTH (in)	THICK	DEPTH (in)	THICK	WIDTH (in)	THICK	WIDTH	THICK	WIDTH	THICK
1	39.00	PG	24.0	1.1250	78.0	0.6250	29.0	1.2500				
2	111.10	PG	24.0	1.2500	78.0	0.6250	29.0	1.7500				
3	39.00	PG	24.0	1.1250	78.0	0.6250	29.0	1.2500				

NOTE: PG = plate Girder ,W = standard W-section with/without cover plates

1

BRIDGE ENGINEERING SOFTWARE & TECHNOLOGY CENTER
DEPARTMENT OF CIVIL & ENVIRON. ENGINEERING
UNIVERSITY OF MARYLAND

MERLIN V 9.0
COMPOSITE
LRF -- 2004
CODE CHECK
PAGE 50

TABLE 1.2.22.5 =DEPTH/THICKNESS RATIOS (N = n)
****

SP NO	IN D NO L	FROM SUPT	Lo ng [1]	Co mp	Web depth	Web thick	D/tw	2Dcp/tw [2]	[3]	[4]	2Dc/tw [5]	[6]	Web Cat
1	0	0.00	0	1	78.00	0.625	124.8	150.0	0.00	90.55			0

1	1	9.45	0	1	78.00	0.625	124.8	150.0	0.00	90.55	0
1	2	18.91	0	1	78.00	0.625	124.8	150.0	0.00	90.55	0
1	3	28.36	0	1	78.00	0.625	124.8	150.0	0.00	90.55	0
1	4	37.82	0	1	78.00	0.625	124.8	150.0	0.00	90.55	0
1	5	47.28	0	1	78.00	0.625	124.8	150.0	8.71	90.55	0
1	6	56.73	0	1	78.00	0.625	124.8	150.0	8.71	90.55	0
1	7	66.19	0	1	78.00	0.625	124.8	150.0	8.71	90.55	0
1	8	75.64	0	1	78.00	0.625	124.8	150.0	8.71	90.55	0
1	9	85.10	0	1	78.00	0.625	124.8	150.0	8.71	90.55	0
1	10	94.55	0	1	78.00	0.625	124.8	150.0	8.71	90.55	0
1	11	104.01	0	1	78.00	0.625	124.8	150.0	8.71	90.55	0
1	12	113.46	0	1	78.00	0.625	124.8	150.0	8.71	90.55	0
1	13	122.92	0	1	78.00	0.625	124.8	150.0	8.71	90.55	0
1	14	132.37	0	1	78.00	0.625	124.8	150.0	8.71	90.55	0
1	15	141.83	0	1	78.00	0.625	124.8	150.0	8.71	90.55	0
1	16	151.28	0	1	78.00	0.625	124.8	150.0	0.00	90.55	0
1	17	160.74	0	1	78.00	0.625	124.8	150.0	0.00	90.55	0
1	18	170.19	0	1	78.00	0.625	124.8	150.0	0.00	90.55	0
1	19	179.65	0	1	78.00	0.625	124.8	150.0	0.00	90.55	0
1	20	189.10	0	1	78.00	0.625	124.8	150.0	0.00	90.55	0

NOTE:

[1] 0 - No long. stiffeners
1 - long. stiffeners

[2] D/tw limit (Eq. 6.10.2.1-1 or Eq. 6.10.2.1.2-1)

[3] For composite sections in positive flexure, use Article D6.3.2 to calculate Dcp and 2*Dcp/tw
Note: If the plastic N.A. is not in the web, Dcp = 0

[4] 2Dcp/tw limit: 3.76*SQRT(E/Fyc) (Eq.6.10.6.2.2-1)

[5] Use Article D6.3.1 to calculate Dc and 2.*Dc/tw

[6] 2Dc/tw limit: 5.7*SQRT(E/Fyc) (Eq.6.10.6.2.3-1)

Web Category
0 = compact section
2 = non-compact section
3 = slender section

1

TABLE 1.2.22.5A=DEPTH/THICKNESS RATIOS (N = inf.)
****

SP NO	IN NO	D L	FROM SUPT	Lo ng [1]	Co mp	Web depth	Web thick	2Dc/tw [2]	[3]	Web Category
1	0		0.00	0	1	78.00	0.625	135.32	137.27	2
1	1		9.45	0	1	78.00	0.625	135.32	137.27	2
1	2		18.91	0	1	78.00	0.625	135.32	137.27	2
1	3		28.36	0	1	78.00	0.625	135.32	137.27	2

1	4	37.82	0	1	78.00	0.625	135.32	137.27	2
1	5	47.28	0	1	78.00	0.625	145.43	137.27	3
1	6	56.73	0	1	78.00	0.625	145.43	137.27	3
1	7	66.19	0	1	78.00	0.625	145.43	137.27	3
1	8	75.64	0	1	78.00	0.625	145.43	137.27	3
1	9	85.10	0	1	78.00	0.625	145.43	137.27	3
1	10	94.55	0	1	78.00	0.625	145.43	137.27	3
1	11	104.01	0	1	78.00	0.625	145.43	137.27	3
1	12	113.46	0	1	78.00	0.625	145.43	137.27	3
1	13	122.92	0	1	78.00	0.625	145.43	137.27	3
1	14	132.37	0	1	78.00	0.625	145.43	137.27	3
1	15	141.83	0	1	78.00	0.625	145.43	137.27	3
1	16	151.28	0	1	78.00	0.625	135.32	137.27	2
1	17	160.74	0	1	78.00	0.625	135.32	137.27	2
1	18	170.19	0	1	78.00	0.625	135.32	137.27	2
1	19	179.65	0	1	78.00	0.625	135.32	137.27	2
1	20	189.10	0	1	78.00	0.625	135.32	137.27	2

NOTE:

[1] 0 - No long. stiffeners
1 - long. stiffeners

[2] For non-composite sections, calculate Dc and 2*Dc/tw

[3] 2Dc/tw limit: 5.7*SQRT(E/Fyc) (Eq.6.10.6.2.3-1)

Web Category
0 = compact section
2 = non-compact section
3 = slender section

1

TABLE 1.2.22.6=FLANGE PROPORTIONS CHECK
****

SP NO	D NO	FROM L SUPT (ft)	bf/2tf	[1]	bf (in)	[2] (in)	tf (in)	[3] (in)	Iyc/Iyt	FLAG
1	0	0.00	10.67	12.	24.0	13.0	1.125	0.688		
			11.60	12.	29.0	13.0	1.250	0.688	0.51	0
1	1	9.45	10.67	12.	24.0	13.0	1.125	0.688		
			11.60	12.	29.0	13.0	1.250	0.688	0.51	0
1	2	18.91	10.67	12.	24.0	13.0	1.125	0.688		
			11.60	12.	29.0	13.0	1.250	0.688	0.51	0
1	3	28.36	10.67	12.	24.0	13.0	1.125	0.688		
			11.60	12.	29.0	13.0	1.250	0.688	0.51	0
1	4	37.82	10.67	12.	24.0	13.0	1.125	0.688		
			11.60	12.	29.0	13.0	1.250	0.688	0.51	0
1	5	47.28	9.60	12.	24.0	13.0	1.250	0.688		
			8.29	12.	29.0	13.0	1.750	0.688	0.40	0

1	6	56.73	9.60	12.	24.0	13.0	1.250	0.688		
			8.29	12.	29.0	13.0	1.750	0.688	0.40	0
1	7	66.19	9.60	12.	24.0	13.0	1.250	0.688		
			8.29	12.	29.0	13.0	1.750	0.688	0.40	0
1	8	75.64	9.60	12.	24.0	13.0	1.250	0.688		
			8.29	12.	29.0	13.0	1.750	0.688	0.40	0
1	9	85.10	9.60	12.	24.0	13.0	1.250	0.688		
			8.29	12.	29.0	13.0	1.750	0.688	0.40	0
1	10	94.55	9.60	12.	24.0	13.0	1.250	0.688		
			8.29	12.	29.0	13.0	1.750	0.688	0.40	0
1	11	104.01	9.60	12.	24.0	13.0	1.250	0.688		
			8.29	12.	29.0	13.0	1.750	0.688	0.40	0
1	12	113.46	9.60	12.	24.0	13.0	1.250	0.688		
			8.29	12.	29.0	13.0	1.750	0.688	0.40	0
1	13	122.92	9.60	12.	24.0	13.0	1.250	0.688		
			8.29	12.	29.0	13.0	1.750	0.688	0.40	0
1	14	132.37	9.60	12.	24.0	13.0	1.250	0.688		
			8.29	12.	29.0	13.0	1.750	0.688	0.40	0
1	15	141.83	9.60	12.	24.0	13.0	1.250	0.688		
			8.29	12.	29.0	13.0	1.750	0.688	0.40	0
1	16	151.28	10.67	12.	24.0	13.0	1.125	0.688		
			11.60	12.	29.0	13.0	1.250	0.688	0.51	0
1	17	160.74	10.67	12.	24.0	13.0	1.125	0.688		
			11.60	12.	29.0	13.0	1.250	0.688	0.51	0
1	18	170.19	10.67	12.	24.0	13.0	1.125	0.688		
			11.60	12.	29.0	13.0	1.250	0.688	0.51	0
1	19	179.65	10.67	12.	24.0	13.0	1.125	0.688		
			11.60	12.	29.0	13.0	1.250	0.688	0.51	0
1	20	189.10	10.67	12.	24.0	13.0	1.125	0.688		
			11.60	12.	29.0	13.0	1.250	0.688	0.51	0

NOTE: [1] = 12. (Eq. 6.10.2.2-1)
[2] = D/6 (Eq. 6.10.2.2-2)
[3] = 1.1tw (Eq. 6.10.2.2-3)

For each nodal point, the 1st line checked criteria for top flange and the 2nd line checked criteria for bottom flange

1

TABLE 1.2.22.7A=FLB AND LTB CATEGORIES
****

SP NO	IN NO	D L	FROM SUPT (ft)	Co mp	FLB LMDAf	FLB LMDApf	FLB LMDArf	FLB CAT	LTB Lb (ft)	LTB Lp (ft)	LTB Lr (ft)	LTB CAT	GOV CAT
1	0		0.00	1	10.67	9.15	16.12	2	24.12	12.07	45.34	2	2
1	1		9.45	1	10.67	9.15	16.12	2	24.12	12.07	45.34	2	2
1	2		18.91	1	10.67	9.15	16.12	2	24.12	12.07	45.34	2	2

1	3	28.36	1	10.67	9.15	16.12	2	24.12	12.07	45.34	2	2
1	4	37.82	1	10.67	9.15	16.12	2	24.12	12.07	45.34	2	2
1	5	47.28	1	9.60	9.15	16.12	2	24.12	12.12	45.52	2	2
1	6	56.73	1	9.60	9.15	16.12	2	24.12	12.12	45.52	2	2
1	7	66.19	1	9.60	9.15	16.12	2	24.12	12.12	45.52	2	2
1	8	75.64	1	9.60	9.15	16.12	2	24.12	12.12	45.52	2	2
1	9	85.10	1	9.60	9.15	16.12	2	24.12	12.12	45.52	2	2
1	10	94.55	1	9.60	9.15	16.12	2	24.12	12.12	45.52	2	2
1	11	104.01	1	9.60	9.15	16.12	2	24.12	12.12	45.52	2	2
1	12	113.46	1	9.60	9.15	16.12	2	24.12	12.12	45.52	2	2
1	13	122.92	1	9.60	9.15	16.12	2	24.12	12.12	45.52	2	2
1	14	132.37	1	9.60	9.15	16.12	2	24.12	12.12	45.52	2	2
1	15	141.83	1	9.60	9.15	16.12	2	24.12	12.12	45.52	2	2
1	16	151.28	1	10.67	9.15	16.12	2	24.12	12.07	45.34	2	2
1	17	160.74	1	10.67	9.15	16.12	2	24.12	12.07	45.34	2	2
1	18	170.19	1	10.67	9.15	16.12	2	24.12	12.07	45.34	2	2
1	19	179.65	1	10.67	9.15	16.12	2	24.12	12.07	45.34	2	2
1	20	189.10	1	10.67	9.15	16.12	2	24.12	12.07	45.34	2	2

NOTE: LMDAf = slenderness ratio for the comp. flange
= bfc / 2tfc (Eq. 6.10.8.2.2-3)
LMDApf = limiting slenderness ratio for a compact flange
= 0.38*SQRT(E/Fyc) (Eq. 6.10.8.2.2-4)
LMDArf = limiting slenderness ration for a non-compct flange
= 0.56*SQRT(E/Fyr) (Eq. 6.10.8.2.2-5)
Lb = unbraced length
Lp = limiting unbraced length to achieve the nominal flexural of RbRhFyc under uniform bending
= 1.0rt*SQRT(E/Fyc) (Eq. 6.10.8.2.3-4)
Lr = limiting unbraced length to achieve the onset of nominal yielding in either flange under uniform bending with consideration of comp. flange residual stress effects
= pi * rt * SQRT(E/Fyr) (Eq. 6.10.8.2.3-5)

In negative moment region, the fist line is for non-composite sections and the second line is for composite sections

Flange Category
0 = compact section
2 = non-compact section
3 = slender section

TABLE 1.2.22.7B=FLB AND LTB RESISTANCE
****

SP NO	IN NO	D L	FROM SUPT	Co mp	Rh	Rb	Cb	FLB Fnc	LTB Fnc	GOV Fnc

		(ft)					(Ksi)	(Ksi)	(Ksi)
1	0	0.00	1	1.000	1.000	1.68	46.74	50.00	46.74
1	1	9.45	1	1.000	1.000	1.68	46.74	50.00	46.74
1	2	18.91	1	1.000	1.000	1.68	46.74	50.00	46.74
1	3	28.36	1	1.000	1.000	1.09	46.74	48.76	46.74
1	4	37.82	1	1.000	1.000	1.09	46.74	48.76	46.74
1	5	47.28	1	1.000	0.991	1.09	48.61	48.39	48.39
1	6	56.73	1	1.000	0.991	1.08	48.61	47.78	47.78
1	7	66.19	1	1.000	0.991	1.08	48.61	47.78	47.78
1	8	75.64	1	1.000	0.991	1.01	48.61	44.62	44.62
1	9	85.10	1	1.000	0.991	1.01	48.61	44.62	44.62
1	10	94.55	1	1.000	0.991	1.01	48.61	44.62	44.62
1	11	104.01	1	1.000	0.991	1.02	48.61	45.14	45.14
1	12	113.46	1	1.000	0.991	1.02	48.61	45.14	45.14
1	13	122.92	1	1.000	0.991	1.09	48.61	48.35	48.35
1	14	132.37	1	1.000	0.991	1.09	48.61	48.35	48.35
1	15	141.83	1	1.000	0.991	1.09	48.61	48.35	48.35
1	16	151.28	1	1.000	1.000	1.16	46.74	50.00	46.74
1	17	160.74	1	1.000	1.000	1.16	46.74	50.00	46.74
1	18	170.19	1	1.000	1.000	1.16	46.74	50.00	46.74
1	19	179.65	1	1.000	1.000	1.16	46.74	50.00	46.74
1	20	189.10	1	1.000	1.000	1.16	46.74	50.00	46.74

Note: In the positive moment region,the result is for DL case
In the negative moment region, the 1st line is for DL case
and the 2nd line is for LL case

1

TABLE 1.2.22.7C=INFOMATION FOR DUCTILITY CHECK
****

SP NO	IN NO	D L	FROM SUPT (ft)	Comp	Dp (in)	0.42Dt (in)
1	0		0.00	1	11.83	38.32
1	1		9.45	1	11.83	38.32
1	2		18.91	1	11.83	38.32
1	3		28.36	1	11.83	38.32
1	4		37.82	1	11.83	38.32
1	5		47.28	1	14.72	38.53
1	6		56.73	1	14.72	38.53
1	7		66.19	1	14.72	38.53
1	8		75.64	1	14.72	38.53
1	9		85.10	1	14.72	38.53
1	10		94.55	1	14.72	38.53
1	11		104.01	1	14.72	38.53

1	12	113.46	1	14.72	38.53
1	13	122.92	1	14.72	38.53
1	14	132.37	1	14.72	38.53
1	15	141.83	1	14.72	38.53
1	16	151.28	1	11.83	38.32
1	17	160.74	1	11.83	38.32
1	18	170.19	1	11.83	38.32
1	19	179.65	1	11.83	38.32
1	20	189.10	1	11.83	38.32

1

TABLE 1.2.22.9=SUMMARY OF STRENGTH CATEGORY OF CROSS SECTION
****

SP NO	IN NO	D L FROM SUPT (ft)	Section Region	STRENGTH CATEGORY, Noncomposite Web [1]	Noncomposite Flange [2]	Composite Web [3]	Composite Flange [4]	Non-Comp.	Category Comp.
1	0	0.00	1	2	2	0		2	0
1	1	9.45	1	2	2	0		2	0
1	2	18.91	1	2	2	0		2	0
1	3	28.36	1	2	2	0		2	0
1	4	37.82	1	2	2	0		2	0
1	5	47.28	1	3	2	0		3	0
1	6	56.73	1	3	2	0		3	0
1	7	66.19	1	3	2	0		3	0
1	8	75.64	1	3	2	0		3	0
1	9	85.10	1	3	2	0		3	0
1	10	94.55	1	3	2	0		3	0
1	11	104.01	1	3	2	0		3	0
1	12	113.46	1	3	2	0		3	0
1	13	122.92	1	3	2	0		3	0
1	14	132.37	1	3	2	0		3	0
1	15	141.83	1	3	2	0		3	0
1	16	151.28	1	2	2	0		2	0
1	17	160.74	1	2	2	0		2	0
1	18	170.19	1	2	2	0		2	0
1	19	179.65	1	2	2	0		2	0
1	20	189.10	1	2	2	0		2	0

Please read NOTE on the following page

1

NOTE: [1] For non-conposite sections, check Eq.6.10.6.2.3-1
[2] For non-composite FLB/LTB, use Article 6.10.8.2 to decide section category
[3] For composite sections in positive flexure, use Article 6.10.6.2.2 to decide section category
For composite sections in negative flexure, use Eq. 6.10.6.2.3-1
[4] For composite FLB or LTB, use Article 6.10.8.2 to compute section category

* Strength Category of Cross Section

0 = compact section

2 = non-compact section

3 = slender section

FOR N = INF. : Category No. is the maximum of [1] and [2]
FOR N = n : Category No. is [3] for composite sections in positive flexure
Category No. is the maximum of [3] and [4] for composite sections in negative flexure

Non-compact for Fy of the flanges > 70 ksi (483 MPa)

1

BRIDGE ENGINEERING SOFTWARE & TECHNOLOGY CENTER
DEPARTMENT OF CIVIL & ENVIRON. ENGINEERING
UNIVERSITY OF MARYLAND

MERLIN V 9.0
COMPOSITE
LRF -- 2004
CODE CHECK

TABLE 1.2.22.10=CONSTRUCBILITY CHECK
****

SP	IN	D	FROM (ft)	fl (ksi)	0.6Fyt (ksi)	fbu (ksi)	[1] (ksi)	fbu+fl (ksi)	[2] (ksi)	fbu+1/3fl (ksi)	[3] (ksi)	FLAG
1	0		0.00	0.0	30.0	0.0	50.0	0.0	50.0	0.0	46.7	0
				0.0	-	0.0	-	0.0	50.0	-	-	0
1	1		9.45	0.0	30.0	8.7	50.0	8.7	50.0	8.7	46.7	0
				0.0	-	7.4	-	7.4	50.0	-	-	0
1	2		18.91	0.0	30.0	16.6	50.0	16.6	50.0	16.6	46.7	0
				0.0	-	14.1	-	14.1	50.0	-	-	0
1	3		28.36	0.0	30.0	23.5	50.0	23.5	50.0	23.5	46.7	0
				0.0	-	20.0	-	20.0	50.0	-	-	0
1	4		37.82	0.0	30.0	29.5	50.0	29.5	50.0	29.5	46.7	0
				0.0	-	25.1	-	25.1	50.0	-	-	0
1	5		47.28	0.0	30.0	31.0	44.4	31.0	50.0	31.0	48.4	0
				0.0	-	22.7	-	22.7	50.0	-	-	0
1	6		56.73	0.0	30.0	34.7	44.4	34.7	50.0	34.7	47.8	0
				0.0	-	25.5	-	25.5	50.0	-	-	0
1	7		66.19	0.0	30.0	37.6	44.4	37.6	50.0	37.6	47.8	0
				0.0	-	27.6	-	27.6	50.0	-	-	0
1	8		75.64	0.0	30.0	39.6	44.4	39.6	50.0	39.6	44.6	0

		0.0	-	29.1	-	29.1	50.0	-	-	0
1	9	85.10	0.0	30.0	40.9	44.4	40.9	50.0	40.9	44.6	0
			0.0	-	30.0	-	30.0	50.0	-	-	0
1	10	94.55	0.0	30.0	41.3	44.4	41.3	50.0	41.3	44.6	0
			0.0	-	30.3	-	30.3	50.0	-	-	0
1	11	104.01	0.0	30.0	40.9	44.4	40.9	50.0	40.9	45.1	0
			0.0	-	30.0	-	30.0	50.0	-	-	0
1	12	113.46	0.0	30.0	39.6	44.4	39.6	50.0	39.6	45.1	0
			0.0	-	29.1	-	29.1	50.0	-	-	0
1	13	122.92	0.0	30.0	37.6	44.4	37.6	50.0	37.6	48.3	0
			0.0	-	27.6	-	27.6	50.0	-	-	0
1	14	132.37	0.0	30.0	34.7	44.4	34.7	50.0	34.7	48.3	0
			0.0	-	25.5	-	25.5	50.0	-	-	0
1	15	141.83	0.0	30.0	31.0	44.4	31.0	50.0	31.0	48.3	0
			0.0	-	22.7	-	22.7	50.0	-	-	0
1	16	151.28	0.0	30.0	29.5	50.0	29.5	50.0	29.5	46.7	0
			0.0	-	25.1	-	25.1	50.0	-	-	0
1	17	160.74	0.0	30.0	23.5	50.0	23.5	50.0	23.5	46.7	0
			0.0	-	20.0	-	20.0	50.0	-	-	0
1	18	170.19	0.0	30.0	16.6	50.0	16.6	50.0	16.6	46.7	0
			0.0	-	14.1	-	14.1	50.0	-	-	0
1	19	179.65	0.0	30.0	8.7	50.0	8.7	50.0	8.7	46.7	0
			0.0	-	7.4	-	7.4	50.0	-	-	0
1	20	189.10	0.0	30.0	0.0	50.0	0.0	50.0	0.0	46.7	0
			0.0	-	0.0	-	0.0	50.0	-	-	0

NOTE: [1] = (PHI)f * Fcrw (Eq. 6.10.3.2.1-3)
[2] = (PHI)f * Rh * Fyc (Eq. 6.10.3.2.1-1) or
= (PHI)f * Rh * Fyt (Eq. 6.10.3.2.2-1)
[3] = (PHI)f * Fnc (Eq. 6.10.3.2.1-2)

"-" is N.A.

Under FLAG Column, 0 = OK; 1= NG

For each nodal point, the 1st line checked criteria for top flange and the 2nd line checked criteria for bottom flange

The values of fbu and fl shall be determined based on factored loads, and shall be taken as positive in sign in all resistance equations (Art. 6.10.1.6)

The value of fbu is the actual stress in this table, the users can use the maximum value within the unbraced length to do their own check

1

TABLE 1.2.22.14=STRENGTH LIMIT STATE CHECK
****

SP NO	IN NO	D L	FROM SUPT (ft)	ID	Mu+1/3flSxt (k-ft)	[1] (k-ft)	fbu (ksi)	[2] (ksi)	fl (ksi)	[3] (ksi)	fbu+ 1/3fl (ksi)	[4] (ksi)	FLAG MCTD
1	0		0.00	0	0.0	21665.7	-	-	0.0	30.0	-	-	0--0
1	1		9.45	0	3648.8	21665.7	-	-	0.0	30.0	-	-	0--0
1	2		18.91	0	6905.5	21665.7	-	-	0.0	30.0	-	-	0--0
1	3		28.36	0	9770.2	21665.7	-	-	0.0	30.0	-	-	0--0
1	4		37.82	0	12242.8	21665.7	-	-	0.0	30.0	-	-	0--0
1	5		47.28	0	14317.0	25809.8	-	-	0.0	30.0	-	-	0--0
1	6		56.73	0	16011.7	25809.8	-	-	0.0	30.0	-	-	0--0
1	7		66.19	0	17330.2	25809.8	-	-	0.0	30.0	-	-	0--0
1	8		75.64	0	18263.0	25809.8	-	-	0.0	30.0	-	-	0--0
1	9		85.10	0	18794.1	25809.8	-	-	0.0	30.0	-	-	0--0
1	10		94.55	0	18971.2	25809.8	-	-	0.0	30.0	-	-	0--0
1	11		104.01	0	18794.2	25809.8	-	-	0.0	30.0	-	-	0--0
1	12		113.46	0	18263.0	25809.8	-	-	0.0	30.0	-	-	0--0
1	13		122.92	0	17330.2	25809.8	-	-	0.0	30.0	-	-	0--0
1	14		132.37	0	16011.7	25809.8	-	-	0.0	30.0	-	-	0--0
1	15		141.83	0	14317.0	25809.8	-	-	0.0	30.0	-	-	0--0
1	16		151.28	0	12242.8	21665.7	-	-	0.0	30.0	-	-	0--0
1	17		160.74	0	9770.2	21665.7	-	-	0.0	30.0	-	-	0--0
1	18		170.19	0	6905.6	21665.7	-	-	0.0	30.0	-	-	0--0
1	19		179.65	0	3648.8	21665.7	-	-	0.0	30.0	-	-	0--0
1	20		189.10	0	0.0	21665.7	-	-	0.0	30.0	-	-	0--0

NOTE: [1] = (PHI)f * Mn (Eq. 6.10.7.1.1-1)
[2] = (PHI)f * Fnc for comp. flange of composite sections in positive flexure (Eq. 6.10.7.2.1-1)
= (PHI)f * Rh * Fyt for tension flange of composite sections in negative flexure and non-composite sections (Eq. 6.10.7.2.1-2)
[3] = 0.6*Fyt for composite sections in positive flexure or tension flange for composite sections in negative flexure and non-composite sections (Eq. 6.10.1.6-1)
= 0.6*Fyc for comp. flange of composite sections in negative flexure and non-composite sections (Eq. 6.10.1.6-1)
[4] = (PHI)f * Fnt for non-compact tension flange of composite sections in positive flexure (Eq. 6.10.8.1.2-1)
= (PHI)f * Fnc for comp. flange of composite sections in negative flexure and non-composite sections (Eq. 6.10.8.1.1-1)

"-" is N.A.

Under FLAG Column, 0 = OK; 1= NG
M = Moment; C = Comp. Flange; T = Tension Flange
D = Ductility

For negative moment region or non-compact sections in positive moment region, the 1st line is for top flange and the 2nd line is for bottom flange

The values of fbu, Mu and fl shall be determined based on factored loads, and shall be taken as positive in

sign in all resistance equations (Art. 6.10.1.6)

The value of fbu is the actual stress in this table, the users can use the maximum value within the unbraced length to do their own check

1

TABLE 1.2.22.15=UNSTIFFENED SECTION SHEAR CAPACITY
****

SP NO	IN D NO L	FROM SUPT (ft)	Fy (ksi)	k [1]	Art.6.10.9.2 [2]	[3]	D/tw	C [4]	Vp (ksi)	SHEAR CAPACITY -Eq.6.10.9.2-- Vn = C x Vp
1	0	0.00	50.0	5.0	60.3	75.4	124.8	0.292	1413.8	413.3
1	1	9.45	50.0	5.0	60.3	75.4	124.8	0.292	1413.8	413.3
1	2	18.91	50.0	5.0	60.3	75.4	124.8	0.292	1413.8	413.3
1	3	28.36	50.0	5.0	60.3	75.4	124.8	0.292	1413.8	413.3
1	4	37.82	50.0	5.0	60.3	75.4	124.8	0.292	1413.8	413.3
1	5	47.28	50.0	5.0	60.3	75.4	124.8	0.292	1413.8	413.3
1	6	56.73	50.0	5.0	60.3	75.4	124.8	0.292	1413.8	413.3
1	7	66.19	50.0	5.0	60.3	75.4	124.8	0.292	1413.8	413.3
1	8	75.64	50.0	5.0	60.3	75.4	124.8	0.292	1413.8	413.3
1	9	85.10	50.0	5.0	60.3	75.4	124.8	0.292	1413.8	413.3
1	10	94.55	50.0	5.0	60.3	75.4	124.8	0.292	1413.8	413.3
1	11	104.01	50.0	5.0	60.3	75.4	124.8	0.292	1413.8	413.3
1	12	113.46	50.0	5.0	60.3	75.4	124.8	0.292	1413.8	413.3
1	13	122.92	50.0	5.0	60.3	75.4	124.8	0.292	1413.8	413.3
1	14	132.37	50.0	5.0	60.3	75.4	124.8	0.292	1413.8	413.3
1	15	141.83	50.0	5.0	60.3	75.4	124.8	0.292	1413.8	413.3
1	16	151.28	50.0	5.0	60.3	75.4	124.8	0.292	1413.8	413.3
1	17	160.74	50.0	5.0	60.3	75.4	124.8	0.292	1413.8	413.3
1	18	170.19	50.0	5.0	60.3	75.4	124.8	0.292	1413.8	413.3
1	19	179.65	50.0	5.0	60.3	75.4	124.8	0.292	1413.8	413.3
1	20	189.10	50.0	5.0	60.3	75.4	124.8	0.292	1413.8	413.3

Please read NOTE on the following page

1

NOTE: [1] k= buckling coefficient = 5+5/((d0/D)**2)
= 5 for unstiffened beams and girders
= 5 for stiffened girders when (d0/D) > 3, or
(d0/D) > (260/(D/tw))**2

[2] = 1.12 * sqrt(Ek / Fyw)

[3] = 1.40 * sqrt(Ek / Fyw)

[4] C = ratio of nominal shear resistance and plastic shear force, Vp

For D/tw < [2], C = 1.0

For [2] <= D/tw <= [3], C = 1.12 * sqrt(Ek / Fyw) / (D/tw)
..... AASHTO LRFD Eq.6.10.9.3.2-6

For D/tw > [3], C = 1.57 * (Ek / Fyw) / (D/tw)^2
..... AASHTO LRFD Eq.6.10.9.3.2-7

** AASHTO LRFD Art.6.10.9.1 --- For interior web panels considered stiffened
if (d0/D) < 3 without long. stiffener, or
if (d0/D) > 3 with both transv. and long. stiffeners.
For handling requirement, (d0/D) > (260/(D/tw))**2

Vu = CVp

where D = clear, unsupported distance between flange components

d0 = distance between transverse stiffeners

** This Article (6.10.9.2) indicates that a designer cannot count on post-buckling shear resistance from tension-field action for an unstiffened girder.

1

TABLE 1.2.22.16=SUMMARY OF WEB STRENGTH CATEGORY
****

SP NO	IN NO	D FROM L SUPT (ft)	WEB STABILITY UNSTIFFENED,[1] ---- D/tw -----	LFD/LRFD MAX. SHEAR (kip)	<=>	UNSTIFFENED SHEAR CAPA-CITY, [2]	STRENGTH CATEGORY; SEE NOTE CATEGORY	OVERALL WEB
1	0	0.00	2	476.1	>	413.3	4	4
1	1	9.45	2	428.3	>	413.3	4	4
1	2	18.91	2	385.1	<	413.3	2	2
1	3	28.36	2	349.2	<	413.3	2	2
1	4	37.82	2	313.2	<	413.3	2	2
1	5	47.28	3	277.2	<	413.3	3	3
1	6	56.73	3	241.2	<	413.3	3	3
1	7	66.19	3	205.2	<	413.3	3	3
1	8	75.64	3	169.2	<	413.3	3	3
1	9	85.10	3	133.2	<	413.3	3	3
1	10	94.55	3	97.2	<	413.3	3	3
1	11	104.01	3	133.2	<	413.3	3	3

1	12	113.46	3	169.2	<	413.3	3	3
1	13	122.92	3	205.2	<	413.3	3	3
1	14	132.37	3	241.2	<	413.3	3	3
1	15	141.83	3	277.2	<	413.3	3	3
1	16	151.28	2	313.2	<	413.3	2	2
1	17	160.74	2	349.2	<	413.3	2	2
1	18	170.19	2	385.1	<	413.3	2	2
1	19	179.65	2	428.3	>	413.3	4	4
1	20	189.10	2	476.1	>	413.3	4	4

Please read NOTE on the following page

1

NOTE [1]: WEB STABILITY, D/tw ratio ..... buckling consideration

For compact section (composite sections in positive flexure)

w/o long. stiff.

D/tw <= 150 (Eq. 6.10.2.1.1-1)

w / long. stiff.

D/tw <= 300 (Eq. 6.10.2.1.2-1)

2Dcp/tw .LE. 3.76*sqrt(E/Fyc) ..... AASHTO Eq.6.10.6.2.2-1

For compact or non-compact sections specified in Art. 6.10.8

(composite sections in negative flexure and
non-composite sections)

2Dc/tw .LE. 5.7*SQRT(E/Fyc) ..... AASHTO Eq.6.10.6.2.3-1

[2]: SHEAR CAPACITY ... web crippling control

Vn = CVp ..... AASHTO Eq.6.10.9.2-1

Vn = VpRc ..... AASHTO Eq.6.10.9.3.2-8

Rc = C+[0.87(1-C)]/sqrt(1+(d0/D)**2)

Vp = 0.58*Fy*D*tw ..... AASHTO Eq.6.10.9.3.3-2

* For the detailed description of shear capacity,
please refer to AASHTO Art.6.10.9.2 and .3

* STRENGTH CATEGORY; 0 = compact section
2 = braced non-compact section

4 = transversely stiffened web
5 = transversely and longitudinally stiffened web
6 = D/tw out of AASHTO Spec.

1

TABLE 1.2.22.17=TRANSVERSE STIFFENER SPACING
****

SP NO	IN NO	D FROM L SUPT (ft)	YIELD STRESS Fy (ksi)	LFD/LRFD MAXIMUM SHEAR (k)	UNSTIFFENED SHEAR CAPACITY (k)	REQUIREMENT OF TRANS. STIFFENERS 1=YES , 0=NO	MAX. ALLOWABLE TRANS. STIFFENERS SPACING (ft-in)
1	0	0.00	50.	476.14	413.28	1	9 - 9
1	1	9.45	50.	428.26	413.28	1	19 - 6
1	2	18.91	50.	385.14	413.28	0	
1	3	28.36	50.	349.15	413.28	0	
1	4	37.82	50.	313.16	413.28	0	
1	5	47.28	50.	277.17	413.28	0	
1	6	56.73	50.	241.18	413.28	0	
1	7	66.19	50.	205.19	413.28	0	
1	8	75.64	50.	169.20	413.28	0	
1	9	85.10	50.	133.21	413.28	0	
1	10	94.55	50.	97.22	413.28	0	
1	11	104.01	50.	133.21	413.28	0	
1	12	113.46	50.	169.20	413.28	0	
1	13	122.92	50.	205.19	413.28	0	
1	14	132.37	50.	241.18	413.28	0	
1	15	141.83	50.	277.17	413.28	0	
1	16	151.28	50.	313.16	413.28	0	
1	17	160.74	50.	349.15	413.28	0	
1	18	170.19	50.	385.14	413.28	0	
1	19	179.65	50.	428.26	413.28	1	19 - 6
1	20	189.10	50.	476.14	413.28	1	9 - 9

1

TABLE 1.2.22.18=STATUS OF TRANSVERSE STIFFENERS
****

SP NO	IN NO	D FROM L SUPT (ft)	YIELD STRESS BEAM (ksi)	TRANS. STIFF.	SPACING,(ft-in) FROM INPUT	<=>	MAXIMUM ALLOWABLE	STATUS SEE NOTE

1	0	0.00	50.	36.	7- 0	<	9- 9	
1	1	9.45	50.	36.	14- 0	<	19- 6	
1	2	18.91	50.	36.	14- 0			**
1	3	28.36	50.					
1	4	37.82	50.					
1	5	47.28	50.					
1	6	56.73	50.					
1	7	66.19	50.					
1	8	75.64	50.					
1	9	85.10	50.					
1	10	94.55	50.					
1	11	104.01	50.					
1	12	113.46	50.					
1	13	122.92	50.					
1	14	132.37	50.					
1	15	141.83	50.					
1	16	151.28	50.					
1	17	160.74	50.					
1	18	170.19	50.	36.	14- 0			**
1	19	179.65	50.	36.	14- 0	<	19- 6	
1	20	189.10	50.	36.	7- 0	<	9- 9	

** NOTE [1] : STATUS

BLANK = Acceptable trans. stiff. spacing
<= = Trans. stiff. spacing violated
** = Trans. stiff. is redundent

1

TABLE 1.2.22.19=SHEAR CAPACITY CHECK
****

SP NO	IN NO	D L (ft)	FROM SUPT	WEB D/T	RB	YIELD SHEAR Vp (k)	TRANS. STIFF. SPACING (ft-in)	CC	LRFD MAXIMUM SHEAR (k)	<=>	SHEAR CAPACITY Vu (k) Eq.6.10.7.3.3a-1,2	STATUS
1	0		0.00	125.	1.0000	1414.	7- 0	0.544	476.14	<	769.62	
1	1		9.45	125.	1.0000	1414.	14- 0	0.592	428.26	<	836.27	
1	2		18.91	125.	1.0000	1414.	14- 0	0.592	385.14	<	836.27	
1	3		28.36	125.	1.0000	1414.		0.292	349.15	<	413.28	
1	4		37.82	125.	1.0000	1414.		0.292	313.16	<	413.28	
1	5		47.28	125.	1.0000	1414.		0.292	277.17	<	413.28	
1	6		56.73	125.	1.0000	1414.		0.292	241.18	<	413.28	
1	7		66.19	125.	1.0000	1414.		0.292	205.19	<	413.28	
1	8		75.64	125.	1.0000	1414.		0.292	169.20	<	413.28	
1	9		85.10	125.	1.0000	1414.		0.292	133.21	<	413.28	
1	10		94.55	125.	1.0000	1414.		0.292	97.22	<	413.28	
1	11		104.01	125.	1.0000	1414.		0.292	133.21	<	413.28	

1	12	113.46	125.	1.0000	1414.		0.292	169.20	<	413.28
1	13	122.92	125.	1.0000	1414.		0.292	205.19	<	413.28
1	14	132.37	125.	1.0000	1414.		0.292	241.18	<	413.28
1	15	141.83	125.	1.0000	1414.		0.292	277.17	<	413.28
1	16	151.28	125.	1.0000	1414.		0.292	313.16	<	413.28
1	17	160.74	125.	1.0000	1414.		0.292	349.15	<	413.28
1	18	170.19	125.	1.0000	1414.	14- 0	0.592	385.14	<	836.27
1	19	179.65	125.	1.0000	1414.	14- 0	0.592	428.26	<	836.27
1	20	189.10	125.	1.0000	1414.	7- 0	0.544	476.14	<	769.62

NOTE: Assumed that all the supports have stiffeners
STATUS: (1) --- blank: shear capacity is ok
(2) --- <= : insufficient shear capacity
(3) --- Vu=CC*R*Vp; R see AASHTO LRFD 6.10.7.3.3a or 3b
or Table .22.15
CC includes post-buckling strength due to tension field action

1

TABLE 1.2.22.20=SECTION PROPERTY CHECK OF TRANSVERSE STIFFENERS
****

SP NO	IN NO	D FROM L SUPT (ft)	MIN. [1] WIDTH (in) AASHTO Eq.6.10.8.1.2-1,2 MIN.	<=>	ACTUAL	<=>	MAX. [2]	I,[3],(in**4) Eq.6.10.8.1.3-1 ACTUAL	<=>	REQ'D	A,[4],(in**2) Eq.6.10.8.1.4-1 ACTUAL	<=>	REQ'D	FL AG
1	0	0.00	6.00	<	9.50	<	16.00	314.92	>	10.25	9.50	>	-2.89	
1	1	9.45	6.00	<	7.00	<	8.00	65.16	>	20.51	3.50	>	-1.72	
1	2	18.91												
1	3	28.36												
1	4	37.82												
1	5	47.28												
1	6	56.73												
1	7	66.19												
1	8	75.64												
1	9	85.10												
1	10	94.55												
1	11	104.01												
1	12	113.46												
1	13	122.92												
1	14	132.37												
1	15	141.83												
1	16	151.28												
1	17	160.74												
1	18	170.19												
1	19	179.65	6.00	<	7.00	<	8.00	65.16	>	20.51	3.50	>	-1.72	
1	20	189.10	6.00	<	9.50	<	16.00	314.92	>	10.25	9.50	>	-2.89	

Please read NOTE on the following page

1

** NOTE [1 or 2]: Minimum width of transverse stiffeners
AASHTO LRFD Eq.6.10.8.1.2-1 or -2

[3]: required moment of inertia for trans. stiff.
AASHTO LRFD Eq.6.10.8.1.3-1

[4]: required gross area of trans. stiff.
AASHTO LRFD Eq.6.10.8.1.3-2

* Minus area indicates that stiffener area is
not governing factor for the relatively web thickness

FLAG : (1) --- BLANK : acceptable trans. stiff.
(2) --- <= : trans. stiff. violates AASHTO requirement(s)

1

TABLE 1.2.22.20A=REQ. SECTION PROPERTIES FOR TRANS. STIFFENERS.
****

SP NO	IN D NO	FROM SUPT (ft)	WEB DEPTH (in)	WEB THICK. (in)	Do (ft-in) ASSUMED SPACING	ASSUMED B	ASSUMED Y	J AASHTO 6.10.8.1.3-1,2	REQ'D I (in**4) AASHTO 6.10.8.1.3-1,2
1	0	0.00	78.0	0.6250	7- 0	2.4	1.4	0.5	10.3
1	1	9.45	78.0	0.6250	14- 0	2.4	1.4	0.5	20.5
1	2	18.91	78.0	0.6250	14- 0	2.4	1.4	0.5	20.5
1	3	28.36	78.0	0.6250	0- 0	2.4	1.0	0.0	0.0
1	4	37.82	78.0	0.6250	0- 0	2.4	1.0	0.0	0.0
1	5	47.28	78.0	0.6250	0- 0	2.4	1.0	0.0	0.0
1	6	56.73	78.0	0.6250	0- 0	2.4	1.0	0.0	0.0
1	7	66.19	78.0	0.6250	0- 0	2.4	1.0	0.0	0.0
1	8	75.64	78.0	0.6250	0- 0	2.4	1.0	0.0	0.0
1	9	85.10	78.0	0.6250	0- 0	2.4	1.0	0.0	0.0
1	10	94.55	78.0	0.6250	0- 0	2.4	1.0	0.0	0.0
1	11	104.01	78.0	0.6250	0- 0	2.4	1.0	0.0	0.0
1	12	113.46	78.0	0.6250	0- 0	2.4	1.0	0.0	0.0
1	13	122.92	78.0	0.6250	0- 0	2.4	1.0	0.0	0.0
1	14	132.37	78.0	0.6250	0- 0	2.4	1.0	0.0	0.0
1	15	141.83	78.0	0.6250	0- 0	2.4	1.0	0.0	0.0
1	16	151.28	78.0	0.6250	0- 0	2.4	1.0	0.0	0.0
1	17	160.74	78.0	0.6250	0- 0	2.4	1.0	0.0	0.0
1	18	170.19	78.0	0.6250	14- 0	2.4	1.4	0.5	20.5

1	19	179.65	78.0	0.6250	14- 0	2.4	1.4	0.5	20.5
1	20	189.10	78.0	0.6250	7- 0	2.4	1.4	0.5	10.3

1

TABLE 1.2.22.21=SERVICE LIMIT STATE CHECK
****

SP NO	IN D NO	FROM L SUPT (ft)	TOP FLANGE ff (ksi)	ff+fl/2 (ksi)	[1] (ksi)	BOT. FLANGE ff+fl/2 (ksi)	[2] (ksi)	COMP. FLG fc (ksi)	fcrw [3] (ksi)	FLAG TBC
1	0	0.00	0.0	-	47.5	0.0	47.5	-	-	00-
1	1	9.45	7.9	-	47.5	9.0	47.5	-	-	00-
1	2	18.91	15.0	-	47.5	17.1	47.5	-	-	00-
1	3	28.36	21.2	-	47.5	24.2	47.5	-	-	00-
1	4	37.82	26.7	-	47.5	30.3	47.5	-	-	00-
1	5	47.28	28.3	-	47.5	27.6	47.5	-	-	00-
1	6	56.73	31.7	-	47.5	30.9	47.5	-	-	00-
1	7	66.19	34.4	-	47.5	33.5	47.5	-	-	00-
1	8	75.64	36.2	-	47.5	35.3	47.5	-	-	00-
1	9	85.10	37.4	-	47.5	36.3	47.5	-	-	00-
1	10	94.55	37.7	-	47.5	36.7	47.5	-	-	00-
1	11	104.01	37.4	-	47.5	36.3	47.5	-	-	00-
1	12	113.46	36.2	-	47.5	35.3	47.5	-	-	00-
1	13	122.92	34.4	-	47.5	33.5	47.5	-	-	00-
1	14	132.37	31.7	-	47.5	30.9	47.5	-	-	00-
1	15	141.83	28.3	-	47.5	27.6	47.5	-	-	00-
1	16	151.28	26.7	-	47.5	30.3	47.5	-	-	00-
1	17	160.74	21.2	-	47.5	24.2	47.5	-	-	00-
1	18	170.19	15.0	-	47.5	17.1	47.5	-	-	00-
1	19	179.65	7.9	-	47.5	9.0	47.5	-	-	00-
1	20	189.10	0.0	-	47.5	0.0	47.5	-	-	00-

1

NOTE: [1] = 0.95RhFyf for composite sections (Eq. 6.10.4.2.2-1)
= 0.80RhFyf for non-composite sections (Eq. 6.10.4.2.2-3)
[2] = 0.95RhFyf for composite sections (Eq. 6.10.4.2.2-2)
= 0.80RhFyf for non-composite sections (Eq. 6.10.4.2.2-3)
[3] = 0.9Ek / (D/tw)^2 (Eq. 6.10.1.9.1-1)
but not to exceed the smaller of RhFyc and Fyw/0.7
k = bending-buckling coefficient

= 9 / (Dc/D)^2 (Eq. 6.10.1.9.1-2)
where:
Dc = depth of the web in compression in the elastic range. For composite sections, Dc shall be determined as specified in Article D6.3.1

"-" is N.A.

Flag check - 0 = OK; 1 = NG
T = Top Flange; B = Bottom Flange; C = Comp. Flange

The values of fl shall be determined based on factored loads, and shall be taken as positive in sign in all resistance equations (Art. 6.10.1.6)

TABLE 1.2.22.23A=FATIGUE STRESS RANGE FOR TRUCK (UNFACTORED)
****

(1) Main (Longitudinal) Load Carrying Members

(2) Road Type = I --- Rural Interstate

SP NO	IN NO	D FROM L SUPT (ft)	TOP OF TOP FLANGE GOVERN. LOADING	STRESS RANGE (ksi)	ACCEPTABLE STRESS CATEGORY	BOTTOM OF BOTTOM FLANGE GOVERN. LOADING	STRESS RANGE (ksi)	ACCEPTABLE STRESS CATEGORY
1	0	0.00	TR	0.0	A B B^C^C D E E^	TR	0.0	A B B^C^C D E E^
1	1	9.45	TR	0.0	A B B^C^C D E E^	TR	0.0	A B B^C^C D E E^
1	2	18.91	TR	0.0	A B B^C^C D E E^	TR	0.0	A B B^C^C D E E^
1	3	28.36	TR	0.0	A B B^C^C D E E^	TR	0.0	A B B^C^C D E E^
1	4	37.82	TR	0.0	A B B^C^C D E E^	TR	0.0	A B B^C^C D E E^
1		39.00	SCG					
1	5	47.28	TR	0.0	A B B^C^C D E E^	TR	0.0	A B B^C^C D E E^
1	6	56.73	TR	0.0	A B B^C^C D E E^	TR	0.0	A B B^C^C D E E^
1	7	66.19	TR	0.0	A B B^C^C D E E^	TR	0.0	A B B^C^C D E E^
1	8	75.64	TR	0.0	A B B^C^C D E E^	TR	0.0	A B B^C^C D E E^
1	9	85.10	TR	0.0	A B B^C^C D E E^	TR	0.0	A B B^C^C D E E^
1	10	94.55	TR	0.0	A B B^C^C D E E^	TR	0.0	A B B^C^C D E E^
1	11	104.01	TR	0.0	A B B^C^C D E E^	TR	0.0	A B B^C^C D E E^
1	12	113.46	TR	0.0	A B B^C^C D E E^	TR	0.0	A B B^C^C D E E^
1	13	122.92	TR	0.0	A B B^C^C D E E^	TR	0.0	A B B^C^C D E E^

```
 1 14 132.37    TR      0.0 A B B^C^C D E E^  TR      0.0 A B B^C^C D E E^
 1 15 141.83    TR      0.0 A B B^C^C D E E^  TR      0.0 A B B^C^C D E E^
 1    150.10  SCG
 1 16 151.28    TR      0.0 A B B^C^C D E E^  TR      0.0 A B B^C^C D E E^
 1 17 160.74    TR      0.0 A B B^C^C D E E^  TR      0.0 A B B^C^C D E E^
 1 18 170.19    TR      0.0 A B B^C^C D E E^  TR      0.0 A B B^C^C D E E^
 1 19 179.65    TR      0.0 A B B^C^C D E E^  TR      0.0 A B B^C^C D E E^
 1 20 189.10    TR      0.0 A B B^C^C D E E^  TR      0.0 A B B^C^C D E E^


-----------------------------------------------------------------------
NOTE: TR = Truck loading;  For LRFD rating, fatigue results are not shown.

NOTE: ITEM ; INT = Span interval point
             SCG = Section-change point
             POC = Dead load point of contraflexure

             I:P = Point where INT coincides with POC
             I:C = Point where INT coincides with SCG
             S:P = Point where SCG coincides with POC
```


TABLE 1.2.22.24=SHEAR CONNECTOR (FATIGUE CRITERIA) (UNFACTORED)
****

SP NO	IN D NO	FROM L SUPT (ft)	AASHTO E6.10.10.1.2 Vsr [1]	Q/I [2]	Sr [3]	AASHTO LRFD Eqn. 6.10.10.2-1,2 [4],Zr <--Input		SHEAR CONN. PER TRANS. SECTION [5], input	MAX. ALLOW. SHEAR CONN. ---PITCH---- (in),[6]
1	0	0.00	88.4	.11309E-01	1.0	TR	2.11	3	6.32
1	1	9.45	81.4	.11309E-01	0.9	TR	2.11	3	6.86
1	2	18.91	77.1	.11309E-01	0.9	TR	2.11	3	7.24
1	3	28.36	76.9	.11309E-01	0.9	TR	2.11	3	7.27
1	4	37.82	76.7	.11309E-01	0.9	TR	2.11	3	7.28
1	5	47.28	76.7	.10759E-01	0.8	TR	2.11	3	7.65
1	6	56.73	76.7	.10759E-01	0.8	TR	2.11	3	7.65
1	7	66.19	76.7	.10759E-01	0.8	TR	2.11	3	7.65
1	8	75.64	76.7	.10759E-01	0.8	TR	2.11	3	7.65
1	9	85.10	76.7	.10759E-01	0.8	TR	2.11	3	7.65
1	10	94.55	76.7	.10759E-01	0.8	TR	2.11	3	7.65
1	11	104.01	76.7	.10759E-01	0.8	TR	2.11	3	7.65
1	12	113.46	76.7	.10759E-01	0.8	TR	2.11	3	7.65
1	13	122.92	76.7	.10759E-01	0.8	TR	2.11	3	7.65
1	14	132.37	76.7	.10759E-01	0.8	TR	2.11	3	7.65
1	15	141.83	76.7	.10759E-01	0.8	TR	2.11	3	7.65
1	16	151.28	76.7	.11309E-01	0.9	TR	2.11	3	7.28
1	17	160.74	76.9	.11309E-01	0.9	TR	2.11	3	7.27
1	18	170.19	77.1	.11309E-01	0.9	TR	2.11	3	7.24
1	19	179.65	81.4	.11309E-01	0.9	TR	2.11	3	6.86

1 20 189.10 88.4 .11309E-01 1.0 TR 2.11 3 6.32

Please read NOTE on the following page

1

NOTE: [1] Vsr = range of shear due to live loads and impact in Kips; at any section, the range of shear shall be taken as the difference in the minimum and maximum shear envelopes (excluding dead loads); AASHTO LRFD Eqn.6.10.10.1.2-2

[2] Q/I : Q= statical moment about the neutral axis of the composite section of the transformed compressive concrete area or the area of reinforcement embedded in the concrete for negative moment, in cubic inches; AASHTO LRFD Eqn.6.10.10.1.2-2

I= moment of inertia of the transformed composite girder in positive moment regions or the moment of inertia provided by the steel beam including or excluding the area of reinforcement embedded in the concrete in negative moment regions, in inches to the fourth power.

[3] Sr = Vsr*Q/I = range of horizontal shear, in Kips per inches, at the junction of the slab and girder at the point in the span under consideration.

[4] Zr = allowable range of horizontal shear, in Kips, on an individual connector, AASHTO LRFD Eqn.6.10.10.2-1

* Default ALPHA value based on 7/8" diameter and input road type

[5] No. of shear connectors per transverse section. This value is from input data type 12032.

[6] Maximum allowable pitch = 24 inches, AASHTO LRFD ART. 6.10.10.1.2

** The connector spacing shown here is calculated based upon AASHTO Fatigue Criteria only; see AASHTO 6.10.10.1.2
No of cycles is 87600000

1

TABLE 1.2.22.24A=SHEAR CONNECTOR (STRENGTH LIMIT STATE)

```
                    ************************************

                    MOMENT
                    REGION P2p,1n P1p   P2n    NO OF SHEAR     SEE NOTE  STATUS
SP IN D FROM        ------ ----- ----- ------  CONNECTOR      -------- --------
NO NO L SUPT        1=POS.  (k)   (k)   (k)   ---- N ---- <=>  N1  N2  BLANK=OK
       (ft)         0=NEG.  LRFD 6.10.10.4.2  FATIG. CRI.               CHECK=**
-----------------------------------------------------------------------------

 1 10  94.55   1 6475.0  3304.8          570         > 107
 1 20 189.10   1 6475.0  3304.8          570         > 107


-----------------------------------------------------------------------------
 Please read NOTE on the Following Page
```

1

Strength Limit State (Article 6.10.10.4)

[1] The number of shear connectors provided between the section of maximum positive moment and each adjacent point of 0.0 moment, or between each adjacent point of 0.0 moment and centerline of an interior support shall be checked to ensure that adequate connectors are provided for Strength Limit State.

[2] The number of shear connectors required equal or exceed the number given by the formula :

N1 (N2) = Vh / Qr - - - - - - (Eq. 6.10.10.4.1-2)

Where

N1 = Number of connectors between points of maximum positive moment and each adjacent point of 0.0 moment

N2 = number of connectors between each adjacent point of 0.0 moment and the centerline of an interior support

Vh = nominal horizontal shear force

Qr = factored shear resistance of one shear connector

= (Phi)sc Qn - - - - - - (Eq. 6.10.10.4.1-1)

Qn = nominal resistance

(Phi)sc = resistance factor for shear connectors

[3] The total horizontal shear force between the point of maximum positive moment and each adjacent point of 0.0 moment shall be the lesser either:

P1p = 0.85 f'c bs ts - - - - - - (Eq. 6.10.10.4.2-2)

or

P2p,1n = Fyw D tw + Fyt bft tft + Fyc bfc tfc (Eq. 6.10.10.4.2-3,5)

Where

f'c = specified 28-day compressive strength of the concrete

bs = effective width of the slab
bfc = width of compression flange
bft = width of tension flange
ts = slab thickness
Fyw = specified minimum yield strength of the web
Fyt = specified minimum yield strength of the tension flange
Fyc = specified minimum yield strength of the compression flange
D = web depth
tft = thickness of tension flange
tfc = thickness of compression flange
tw = web thickness

[4] For continuous-span composite sections, the total horizontal shear force between each adjacent point of 0.0 moment and the centerline of an interior support shall be taken as:

P2n = 0.45 f'c bs ts- - - - - - (Eq. 6.10.10.4.2-6)

Where
bs = effective width of the concrete deck
ts = thickness of a concrete deck

1

TABLE 1.2.22.24B=RECOMMANDED SHEAR CONNECTOR REQUIRED PITCH
****

SPAN NO.	CURRENT SPAN FROM (ft)	TO (ft)	REQUIRED PITCH (in)
1	0.000	94.550	6.000
1	94.550	189.100	6.000

1

TABLE 1.2.22.24C=TENSION-COMPRESSION-REVERSAL AREAS
****

SPAN NO.	CURRENT SPAN FROM (ft)	TO (ft)	TCR
1	0.0	189.1	C

NOTE: T: TENSION AREA, C: COMPRESSION AREA,
R: REVERSAL AREA BASED ON TOTAL TOP FLANGE
STRESSES

TABLE 1.2.30.1=CODE CHECK STATUS SUMMARY
****

STATUS	TABLE NO.
OK	1.2.8.2=MAXIMUM LIVE LOAD DEFLECTION FOR COMPOSITE CONSTRUCTION
OK	1.2.22.4=DEPTH RATIOS
OK	1.2.22.10=CONSTRUCBILITY CHECK
OK	1.2.22.14=STRENGTH LIMIT STATE CHECK
OK	1.2.22.17=TRANSVERSE STIFFENER SPACING
OK	1.2.22.18=STATUS OF TRANSVERSE STIFFENERS
OK	1.2.22.19=SHEAR CAPACITY CHECK
OK	1.2.22.20=SECTION PROPERTY CHECK OF TRANSVERSE STIFFENERS
OK	1.2.22.21=SERVICE LIMIT STATE CHECK
OK	1.2.22.24A=SHEAR CONNECTOR (ULTIMATE STRENGTH CRITERIA)
OK	1.2.22.25=REBAR FATIGUE CHECK IN THE NEGATIVE MOMENT REGION

MORE TABLES TO BE INSPECTED ...

1.2.22.23A=FATIGUE STRESS RANGE FOR TRUCK (UNFACTORED)

1.2.22.24=SHEAR CONNECTOR (FATIGUE CRITERIA) (UNFACTORED)

1.2.22.29=SPLICE DESIGN AT SECTION CHANGE POINTS

TABLE 1.2.32.1=RATING; MAXIMUM STRENGTH
****

SP NO	IN NO	D L FROM SUPT (ft)	MOMENT CAP. (k-ft) STRESS	UNFACTORED DEAD LOAD MOMENT D1; k-ft ksi	D2	UNFACTORED L+I MAX. MOMENT POS. MAX. STRESS	NEG.	OPERAT. RATING FACTOR [3]	LIVE LOAD TYPE	INVENT. RATING FACTOR	CAT
1	0	0.00	21665.7	0.0	0.0	0.0	0.0	9.99	SP.V	9.99	0
1	1	9.45	21665.7	1647.5	163.5	1026.0	0.0	9.99	SP.V	9.99	0
1	2	18.91	21665.7	3121.6	309.7	1938.1	0.0	6.64	SP.V	6.64	0
1	3	28.36	21665.7	4422.2	438.7	2736.3	0.0	4.22	SP.V	4.22	0
1	4	37.82	21665.7	5549.5	550.6	3420.5	0.0	3.04	SP.V	3.04	0
1	5	47.28	25809.8	6503.3	645.2	3986.2	0.0	3.14	SP.V	3.14	0
1	6	56.73	25809.8	7283.7	722.6	4447.3	0.0	2.63	SP.V	2.63	0
1	7	66.19	25809.8	7890.7	782.8	4806.2	0.0	2.31	SP.V	2.31	0
1	8	75.64	25809.8	8324.2	825.9	5055.8	0.0	2.11	SP.V	2.11	0
1	9	85.10	25809.8	8584.3	851.7	5184.5	0.0	2.00	SP.V	2.00	0
1	10	94.55	25809.8	8671.1	860.3	5227.4	0.0	1.97	SP.V	1.97	0
1	11	104.01	25809.8	8584.3	851.7	5184.5	0.0	2.00	SP.V	2.00	0
1	12	113.46	25809.8	8324.2	825.9	5055.8	0.0	2.11	SP.V	2.11	0
1	13	122.92	25809.8	7890.7	782.8	4806.2	0.0	2.31	SP.V	2.31	0
1	14	132.37	25809.8	7283.7	722.6	4447.3	0.0	2.63	SP.V	2.63	0
1	15	141.83	25809.8	6503.3	645.2	3986.2	0.0	3.14	SP.V	3.14	0
1	16	151.28	21665.7	5549.5	550.6	3420.5	0.0	3.04	SP.V	3.04	0
1	17	160.74	21665.7	4422.3	438.7	2736.3	0.0	4.22	SP.V	4.22	0
1	18	170.19	21665.7	3121.6	309.7	1938.1	0.0	6.64	SP.V	6.64	0
1	19	179.65	21665.7	1647.5	163.5	1026.0	0.0	9.99	SP.V	9.99	0
1	20	189.10	21665.7	0.0	0.0	0.0	0.0	9.99	SP.V	9.99	0

Please read NOTES on the following page

1

NOTE [1]: AASHTO 5.5.2.1 OPERATING RATING OF SECTIONS GOVERNED BY "MAXIMUM STRENGTH" LOAD-STRENGTH RELATIONSHIP, PP.35 ---> BASED ON LRFD , STRENGTH LIMIT STATE CRITERIA

[2]: AASHTO 5.5.2.1A ; MAXIMUM STRENGTH.GE. 1.3[D+RF(L+I)]

WHERE .GE. = GREATER OR EQUAL TO
D = EFFECT OF DEAD LOAD ,(Ksi)
RF = RATING FACTOR
L+I = EFFECT OF LIVE LOAD PLUS IMPACT ,(Ksi)

[3]: RATING FACTOR 9.99 INDICATES THAT THE CURRENT SECTION IS NOT GOVERNING AT ALL.

RATING FACTOR 0.0 INDICATES THAT EITHER ALLOWABLE STRESS

IS TOO LOW OR DEAD LOAD STRESS IS TOO HIGH

[4]: LRFD SECTION IS RATED BY
RF=(Mu-ENS1*(GDC*D1+GDW*D2)))/ENS1*GLLST1*(L+I)
FOR NON COMPACT SECTIONS, RATING FORMULA IS MODIFIED TO
RF=(Mu-
ENS1*(GDC*D1*S2/S0+GDW*D2*S2/S1)))/ENS1*GLLST1*(L+I)
WHERE S0,S1 & S2 ARE SECTION MODULUS OF D1,D2 & L
STRESS CATEGORY SHOWN ON THE LAST COL. (0=COMPACT)

[5]: FOR CONTINUOUS BEAM WITH COMPACT SECTIONS,
THE STRESSES ARE CALCULATED AFTER REDISTRIBUTION

1

TABLE 1.2.32.2=RATING; SERVICEABILITY STRENGTH
****

SP NO	IN NO	D L FROM SUPT (ft)	0.95Fy OR 0.80Fy (ksi)	UNFACTORED DEAD LOAD ---STRESS--- STEEL TOP;ksi;BOT		UNFACTORED L+I STRESS MAX. POS. ---STEEL--- TOP;ksi;BOT		MAX. NEG. --- STEEL--- TOP;ksi;BOT		OPERAT. RATING FACTOR [3]	LIVE LOAD TYPE	INVENT. RATING FACTOR
1	0	0.00	47.5	0.00	0.00	0.00	0.00	0.00	0.00	9.99	SP.V	9.99
1	1	9.45	47.5	-7.28	6.45	-0.72	2.87	0.00	0.00	9.99	SP.V	9.99
1	2	18.91	47.5	-13.79	12.22	-1.35	5.42	0.00	0.00	6.51	SP.V	6.51
1	3	28.36	47.5	-19.53	17.32	-1.91	7.65	0.00	0.00	3.95	SP.V	3.95
1	4	37.82	47.5	-24.51	21.73	-2.39	9.56	0.00	0.00	2.70	SP.V	2.70
1	5	47.28	47.5	-25.82	19.73	-2.80	8.79	0.00	0.00	3.16	SP.V	3.16
1	6	56.73	47.5	-28.92	22.10	-3.12	9.81	0.00	0.00	2.59	SP.V	2.59
1	7	66.19	47.5	-31.33	23.94	-3.38	10.60	0.00	0.00	2.22	SP.V	2.22
1	8	75.64	47.5	-33.05	25.26	-3.55	11.15	0.00	0.00	1.99	SP.V	1.99
1	9	85.10	47.5	-34.08	26.05	-3.64	11.44	0.00	0.00	1.88	SP.V	1.88
1	10	94.55	47.5	-34.43	26.31	-3.67	11.53	0.00	0.00	1.84	SP.V	1.84
1	11	104.01	47.5	-34.08	26.05	-3.64	11.44	0.00	0.00	1.88	SP.V	1.88
1	12	113.46	47.5	-33.05	25.26	-3.55	11.15	0.00	0.00	1.99	SP.V	1.99
1	13	122.92	47.5	-31.33	23.94	-3.38	10.60	0.00	0.00	2.22	SP.V	2.22
1	14	132.37	47.5	-28.92	22.10	-3.12	9.81	0.00	0.00	2.59	SP.V	2.59
1	15	141.83	47.5	-25.82	19.73	-2.80	8.79	0.00	0.00	3.16	SP.V	3.16
1	16	151.28	47.5	-24.51	21.73	-2.39	9.56	0.00	0.00	2.70	SP.V	2.70
1	17	160.74	47.5	-19.53	17.32	-1.91	7.65	0.00	0.00	3.95	SP.V	3.95
1	18	170.19	47.5	-13.79	12.22	-1.35	5.42	0.00	0.00	6.51	SP.V	6.51
1	19	179.65	47.5	-7.28	6.45	-0.72	2.87	0.00	0.00	9.99	SP.V	9.99
1	20	189.10	47.5	0.00	0.00	0.00	0.00	0.00	0.00	9.99	SP.V	9.99

Please read NOTES on the following page

1

NOTE [1]: AASHTO 5.5.2.2 OPERATING RATING OF SECTIONS GOVERNED BY SERVICEABILITY LOAD-STRENGTH RELATIONSHIP, PP.37
---> BASED ON LRFD, SERVICE II LIMIT STATE CRITERIA

[2]: AASHTO 5.5.2.2A; SERVICEABILITY STRENGTH.GE. [D+RF(L+I)]

[3]: RATING FACTOR 9.99 INDICATES THAT THE CURRENT SECTION IS NOT GOVERNING AT ALL.

RATING FACTOR 0.0 INDICATES THAT EITHER ALLOWABLE STRESS IS TOO LOW OR DEAD LOAD STRESS IS TOO HIGH

[4]: FOR CONTINUOUS BEAM WITH COMPACT SECTIONS, THE STRESSES ARE CALCULATED AFTER REDISTRIBUTION

1

TABLE 1.2.32.3C=BRIDGE RATING INFORMATION FOR GENERAL TRUCK

SPAN NO.	SPAN LENGTH (ft)	CRITICAL LOCATION D FROM L SUPT (ft)	GOVERNING RATING CRITERION	OPERATING RATING	INVENTORY RATING
1	189.10	94.55	SERVICEBILITY	1.84	1.84

1

TABLE 1.2.32.4=RATING; LIVE LOAD DEFLECTION
****

SPAN NO.	D FROM L SUPT (ft)	NUMBER OF LANE AND DIST. FACTOR FOR LL DEFL.	LL + I. DEFLECTION (inch)	GOVERN. LOAD TYPE	RATING FACTOR FOR LL DEFL. RF = L/(800 * LL DEFL.)
1	94.55	11 0.550	-2.21	HL-93	1.29

12	0.600	-2.41	1.18

NOTE: [1] "-" indicates downward deflection

[2] RF * (live load defl.) = span length/800, therefore

RF = L/(800 * LL Defl.), if = 99, No rating

SECTION 3

AS-BUILT INFORMATION

P. 1

As-Built information provided by Hubbard

Hubbard
Construction Company

March 19, 2009

Mr. Mike Lausier, P.E.
Metric Engineering, Inc.
2900 S. Apopka Blvd.
Apopka, FL 32703

Subject: HCC submittal 400-25
441 Bridge deck thickness measurements

Dear Mr. Lausier,

HCC has performed depth measurements at the locations on the 441 bridge requested by your office. Although several methods were initially used to determine the thickness in these areas, the only reliable, accurate method proved to be a direct measurement made with a feeler gauge through a drill hole. Using the procedure submitted separately, HCC has performed this work and made the measurements. The measurement locations and the measurements themselves are attached for your review. In summary, the measurements have identified an area with a minimum thickness of 7 9/16". This area is roughly centered around the drill hole performed at beam 4, location 10.

In order to determine the size of the depressed area, HCC has straight-edged the deck surrounding this location, and has found that the area is approximately 23 feet longitudinally by 14 feet transverse. It appears from the straightedge measurements that depending on the direction of measurement, the depth of the depression is anywhere from ¼" to ½". This information can be correlated by the surrounding depth measurements Jitu Prajapati of MEI witnessed the straightedge and the depression measurements.

HCC hereby submits the measurements for your review, and stands ready at your disposal to provide any additional measurements, information, or professional analysis required to resolve the issue. If you have any questions please do not hesitate to contact this office.

Truly yours,

Kevin Kirk
Project Engineer
Hubbard Construction Company

Cc: R. Pereira, T. Craft, job, file

P. ii

As-Built information provided by Hubbard

P. iii

AS-Built information
Provided by Hubbard

Hubbard Construction Company

Maitland Blvd Extension Project OOCEA 414-211
Results of analysis of deck thickness
3/19/2009

Location on Plan			depth meas.	
hole #	position	beam	@ drill-hole (in)	
1	14	4	8 1/4	8 1/4"
2	13	6	8 3/8	8 3/8"
3	12	4	7 3/4	7 3/4"
4	11	6	8 5/16	8 5/16"
5	9	6	8 1/8	8 1/8"
6	10	4	7 9/16	7 9/16" ← min
7	6	6	7 7/8	7 7/8"
8	7	4	8"	8"

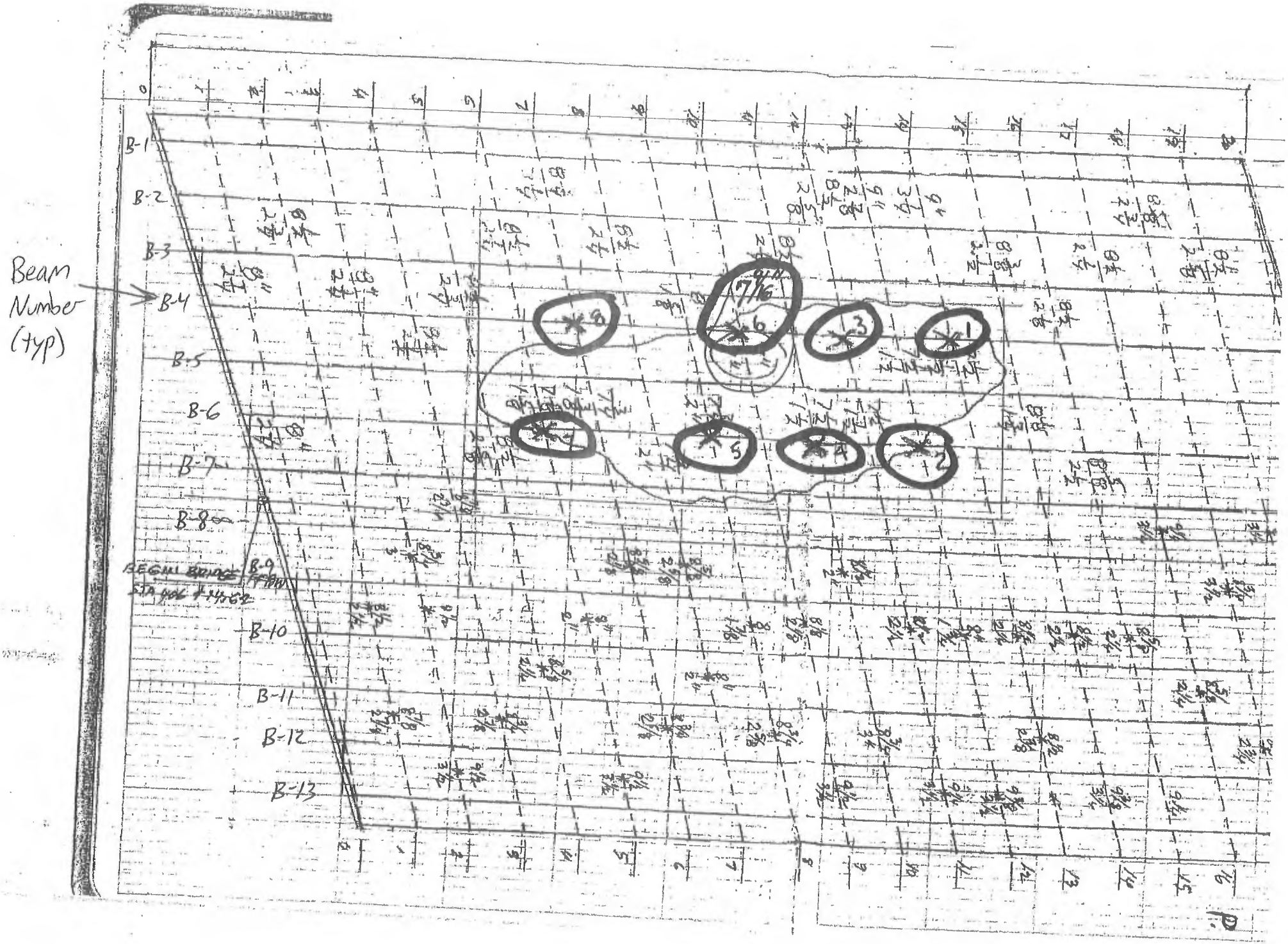
Beam Number (typ)
B-1
B-2
B-3
B-4
B-5
B-6
B-7
B-8
B-9
B-10
B-11
B-12
B-13
BEGIN BRIDGE
STA 106+14.62
7/16
1
2
3
4
5
6
7
8

Florida Bridge and Transportation, Inc.
Structural Engineers

PROJECT No. 414-211
SUBMITTAL No. 400-28
THIS SUBMISSION HAS BEEN REVIEWED AND APPEARS TO COMPLY WITH THE INTENTION OF THE DRAWINGS AND SPECIFICATIONS. IT IS SUBMITTED FOR DESIGNER APPROVAL.
HUBBARD CONSTRUCTION COMPANY
By [illegible] Date 4/7/09

April 7, 2009

Mr. Kevin Kirk
Hubbard Construction Company
2591 Clark Street
Unit 203
Apopka, FL 32703

RE: Analysis of Thin Deck at SR 414 (Maitland Blvd. Extension) over SR 500 (US 441)
Bridge No 750743 (OOCEA 414-211)
HCC #10363
FBT Project Number 07-18.12

Dear Mr. Kirk:

Florida Bridge and Transportation, Inc. (FBT) has analyzed the effects of the thin deck at the subject bridge location. The original contract plans required a total deck thickness of 8.5" comprised of an 8.0" structural deck thickness plus an additional 0.5" sacrificial thickness provided for future profile grinding. Based on as-built information provided by Hubbard, the minimum deck thickness appears to be 7 9/16" with a minimum concrete cover of 1.5". The attached calculations indicate that the minimum as-built deck thickness is acceptable from a structural perspective and meets the strength requirements of the LRFD Bridge Design Code. We used the information from the SIP Form calculations to determine that the actual unit weight of the SIP forms and the concrete required to fill the form flutes is 13.5 PSF (see Page 1-8). Although the concrete cylinder test results from PSI indicated the minimum concrete strength within the deck is 6,900 psi (see pages 1-11 through 1-21), we determined that a concrete strength of 5,250 psi satisfies the design strength requirements. Therefore, the as-built deck has sufficient capacity for the anticipated loading conditions.

We provided load rating calculations showing the per-plan rating and the as-built rating information. The load rating from PTG indicated that the overall bridge load rating is controlled by shear at the ends of the girders. The thin deck will actually improve that situation by providing less dead load on the girders. The thin deck did reduce the moment capacity at midspan, but not significantly. The rating factor for moment with the per-plan deck thickness was 1.79. The rating factor moment for the as-built deck thickness is 1.74. This indicates that the bridge still has 74% reserve capacity remaining for moment at midspan.

We contacted Ivan Lasa of the FDOT Materials Lab in Gainesville regarding the durability of similar bridge decks where the concrete cover was less than the 2" cover required per plans. Mr. Lasa confirmed that the FDOT has not had significant issues with concrete covers of about 1.5" (as is our case). He stated that penetrant sealers are normally only provided if the deck has cracking, and that penetrant sealers could be detrimental to the friction resistance if applied improperly (see Page 2-1). FDOT's standard used to be 1.25" of cover in the top of the bridge deck, and those

P.O. Box 947777 * Maitland, FL 32794-7777 * Phone (407) 647-1922 * Fax (407) 647-1925

structures have a history of performing well in slightly aggressive environments like our condition. Therefore, the durability of the bridge should not be significantly reduced by the as-built bridge deck thickness, and the deck should be considered acceptable in the as-built condition.

Based on all of the information above, the as-built deck thickness should be considered acceptable, and no remedial measures are required.

Please feel free to contact me if you have any questions.

Very truly yours,
Florida Bridge and Transportation, Inc.

Mark Niedermann, P.E.
President
PE #45957
Certificate of Authorization #26379

Avoid Grinding deck in substandard thickness areas.

☐ APPROVED
☐ NOT APPROVED
☐ MANUFACTURER APPROVED,
☐ ITEM INCORRECT

☑ APPROVED AS NOTED
☐ DO NOT RESUBMIT
☐ REVISE AND RESUBMIT
☐ SUBMIT SPECIFIED ITEM

☐ _____

CHECKING IS ONLY FOR GENERAL CONFORMANCE WITH THE DESIGN CONCEPT OF THE PROJECT AND GENERAL COMPLIANCE WITH THE INFORMATION GIVEN IN THE CONTRACT DOCUMENTS. ANY ACTION SHOWN IS SUBJECT TO THE REQUIREMENTS OF THE PLANS AND SPECIFICATIONS. CONTRACTOR IS RESPONSIBLE FOR: DIMENSIONS, WHICH SHALL BE CONFIRMED AND CORRELATED AT THE JOB SITE; FABRICATION PROCESSES AND TECHNIQUES OF CONSTRUCTION; COORDINATION OF HIS WORK WITH THAT OF ALL OTHER TRADES AND THE SATISFACTORY PERFORMANCE OF HIS WORK.

PARSONS TRANSPORTATION GROUP

DATE 4/10/09 BY _____

4/7/09

SECTION 4

PLANS

GENERAL NOTES

A. SPECIFICATIONS
1. GENERAL: The General and Technical Specifications (OOCEA) and Supplement and/or Amendments thereto.
2. DESIGN:
   a) AASHTO LRFD Bridge Design Specifications, (2004) Third Edition and 2005 & 2006 Interims as specified in the FDOT Structures Design Guidelines.
   b) FDOT Structures Manual Topic No. 625-020-154-b (html web based manual) (July 2006).
   c) F.D.O.T. Plans Preparation Manual (January, 2006)
   d) FDOT Design Standards (2006) and Interims.

B. DESIGN LOADINGS
1. DEAD LOADS:
   a) Unit Weight of Reinforced Concrete: 150 PCF
   b) Traffic Railing Barrier w/ Soundwall: 1008 PLF (SDG), Median Barrier: 486 PLF; Heavy Truck Barrier: 486 PLF, Traffic Railing Barrier: 421 PLF, Steel Railing: 30 PLF
   c) Stay in Place Metal Forms: Design includes an allowance of 20 PSF over the Projected Plan Area of the Metal Forms for the Unit Weight of the Forms and Concrete required to fill the Form Flutes. Stay in Place Metal Forms shall not be used for Cantilever Portions of the Decks.
2. LIVE LOADS:
   a) HL - 93 Loading
3. WIND LOADS:
   Basic Wind: In Accordance with AASHTO and Structures Design Guidelines, Chap. 2.
4. THERMAL FORCES:

a) Seasonal Variation for Design:	Concrete	Concrete DEck or Steel Girder
Temp. Rise:	+35°F	+40°F
Temp. Fall:	-35°F	-40°F
Normal Temperature:	70°F	70°F

   b) Thermal Coefficient = 0.000006 per Degree F (Concrete), 0.0000065 Degree F (Steel)
   c) For Joint Construction at Temperatures other than 70° F, adjust seal opening according to the Temperature adjustments. For Temperatures above 70° F diminish opening and for Temperatures below 70° F increase opening.
5. SEISMIC:
   In Accordance with AASHTO and Structures Design Guidelines (SDG) 2.3.
6. VEHICLE COLLISION LOAD:
   New Pier Columns have been designed for 400 kip Vehicle Collision Load.

C. MATERIALS
1. CONCRETE:
   Concrete shall be in accordance with Florida Department of Transportation Specification Section 346.

Class of Concrete	Minimum 28-Day Compressive Strength (psi)	Location of Concrete in Structure
II	f'c = 3,400	CIP Concrete - Traffic Railing Barrier
II (Bridge Deck)	f'c = 4,500	CIP Concrete Bridge Deck, Diaphragms and Approach Slabs
IV	f'c = 5,500	CIP Concrete - Substructure
V (Special)	f'c = 6,000	Prestressed Piles
VI	f'c = 8,500	Prestressed Beams

   a) Provide ¾" Chamfer on All Exposed Edges, Unless Otherwise Noted.
   b) Construction Joints will be permitted only at locations shown on Plans. Additional Construction Joints, or alternate locations to those shown, shall require Written Approval by the Engineer.
2. REINFORCING STEEL:
   a) All Reinforcing Steel shall be ASTM A615, Grade 60.
   b) All Dimensions pertaining to the location of Reinforcing are to the Centerline of Bar except where the Clear Dimension is shown to Face of Concrete.
   c) Reinforcement Detail Dimensions are out to out of Bars. See Design Standards for additional Details.
   d) Reinforcing Bars required to be Field Cut/Adjusted, shall be incidental to the Unit Cost of Reinforcing Steel.
   e) Welded Wire Fabric (WWF) shall conform to ASTM A497.
   f) Bar Couplers shall be on the FDOT QPL List.
3. PRESTRESSING STRANDS:
   Prestressing Strands used for Precast Beams shall be 270KSI, Low Relaxation, ½" dia. Special Strands, or 6/10" dia. Strands. Strand used for Precast Piles shall be in accordance with Design Standard 20618.

D. CONCRETE COVER
1. Concrete Covers Shall Be:

	SR 414 Over Spur 1 & SR 414 Over SR 500 (US 441)	SR 414 Viaduct
- Superstructure (CIP)(Except as Noted):	2"	2"
- Top Deck Surfaces:	2½"	2½"
- Substructure (CIP):		
- External Surfaces Cast Against Earth:	4"	4½" (Unless Noted Otherwise)
- For Other External Surfaces:	3"	4" (Unless Noted Otherwise)
- Inverted Tee Caps	N/A	2"
- Top of Pedestal:	2"	2"

2. Concrete Cover shown in the Plans does not include Reinforcement Placement and Fabrication Tolerances unless shown as "Minimum Cover". See FDOT Standard Specifications for Allowable Reinforcement Placement Tolerances.

E. DESIGN METHOD
Load and Resistance Factor Design method (LRFD)

F. FOUNDATION
1. All Foundation Elements and Procedures shall be in accordance with Section 455 of the Specifications.
2. Piles within the MSE Wall Volume shall be driven prior to the construction of MSE Walls. The portion of the Piles within the Wall Volume shall be wrapped with Polyethylene Sheeting above Existing Grade in accordance with Specification Section 459.
3. For Normal Bearing Resistances and further information, see the Foundation Layout Sheets.
4. Steel H-piles may be spliced as necessary. Contractor shall submit splice details to the Engineer for Review and Approval. Cost of splicing piles shall be included in the bid item for piles.

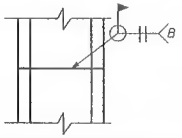

PILE SPLICE DETAIL

G. BRIDGE DECK GROOVING AND SCREEDING
1. The Riding Surface of Bridge Deck shall be Screeded to Finished Grade Elevations. The Contractor shall account for Theoretical Deflections due to self weight, Deck Casting Sequence, Deck Forming Systems, Construction Loads, Overlays and Temporary Shoring, etc as required.
2. All Concrete Roadway Riding Surfaces of Bridge Deck and Approach Slabs shall be Grooved in accordance with Section 400-15.2.5 of the Specifications.

H. ENVIRONMENTAL CLASSIFICATION
Superstructure: Slightly Aggressive for all Bridge Locations
Substructure:
- Spur 1 - Moderately Aggressive (Concrete & Steel) (PH 6.4)
- Viaduct - Buried Substructure Elements
  - Steel: Slightly Aggressive
  - Concrete: Slightly Aggressive
  - Exposed Substructure Elements
    - Steel: Extremely Aggressive (Soil PH = 4.4)
    - Concrete: Extremely Aggressive (Soil PH = 4.4)
- US 441 - Buried Substructure Elements
  - Steel: Slightly Aggressive
  - Concrete: Slightly Aggressive
  - Exposed Substructure Elements
    - Steel: Extremely Aggressive (Soil PH = 5.6)
    - Concrete: Moderately Aggressive (Soil PH = 5.6)

I. UTILITIES
1. The Utilities shown in the Bridge Plans are at Approximate Locations. For additional Information, refer to the Utilities Plans.
2. Contractor shall Notify all involved Utility Companies to verify exact locations prior to Start of Construction.
3. Contractor shall assure that any Existing Utilities are not endangered or disturbed during Construction, and that Active Utilities are properly Maintained within the Construction Limits.

BRIDGE NOS. 750704, 750707 & 750743

REVISIONS					
DATE	BY	DESCRIPTION	DATE	BY	DESCRIPTION

	NAMES	DATES
DRAWN BY	CAL	01-07
CHECKED BY	TED	01-07
DESIGNED BY	NJB	01-07
CHECKED BY	TED	01-07
APPROVED BY	T.E. Davidson P.E.	

ENGINEER OF RECORD: PARSONS
2429 LAKEMONT AVE., SUITE 450, ORLANDO, FL 32814
PHONE: (407) 702-6800
CERTIFICATE OF AUTHORIZATION NO. 1934
THOMAS E. DAVIDSON, P.E. LIC. NO. 47121

EXPRESSWAY AUTHORITY

ROAD NO.	SR 414	SHEET TITLE: GENERAL NOTES (1 OF 2)	
COUNTY	ORANGE	PROJECT NAME: MAITLAND BLVD. EXTENSION SR 414 SECTION 211	SHEET NO. B-5
FINANCIAL PROJECT ID	414-211		

p0031062 3/28/2007 8:45:19 AM P:\646262\646262\struct\Common_Shts\BGeneralNotes01.DGN

PARSONS

GENERAL NOTES (Continued)

LEGEND Color Code per Federal Standard 595B (7/1994)	
(DB) Color 33446: Dark Brown	(DG) Color 34227: Dark Green
(LB) Color 33690: Light Brown	(LG) Color 36622: Light Gray

J. MAINTENANCE OF TRAFFIC
See Roadway Plans For Traffic Control Plans.

K. CONSTRUCTION OVER TRAFFIC
The following Construction Activities shall not be allowed over Traffic
1. Girder Placement.
2. Deck form placement and removal.
3. Concrete Deck placement.

L. SURFACE FINISH (See Details this Sheet and Wall Aesthetics Sheet)
1. Finish Coating:
   a) Finish Coatings and Color Shall be Applied to the Elements indicated in the Surface Finish Details on this sheet and on Wall Aesthetics Sheet.
   b) Costs of Finish Coatings shall be incidental to the item coated.
   c) Exposed faces of Pier Columns and Caps and End Bents (except tops of Caps and Bents) Shall Be Federal Standard 595B (July 1994) 33690 (Light Brown).
2. Applied Finish Coating for Retaining Walls and Traffic Railing Barriers shall be in accordance with Section 400-15 of OOCEA Technical Specifications.
3. Applied Finish Coating Color shall be in compliance with Section 400-15.2.6.6 or as specified herein.
4. Includes cleaning concrete surfaces in accordance with OOCEA Technical Specifications Section 400 and applying two pigmented layers of coating. The two pigmented layers of coating shall consist of one applied pigmented Class 5 Finish coating (TEXT COTE-X-70 BRIDGE COTE as manufactured by Textured Coatings of America, Inc.) and one applied pigmented coat of Anti-Graffiti coating (TEXT COTE-TY-COTE as manufactured by Textured Coating of America Inc.). Applied coating thickness and cure time shall be as recommended by the paint manufacturer.
5. All existing vegetation in/on existing surfaces shall be removed prior to painting and be kept removed in their entirely for the complete duration of Contract 414-211. Cost for removal shall be considered incidental to Price Bid for item having vegetation removed.
6. For all concrete coatings, the contractor shall submit manufacturer's samples Product Data Sheets of each color to be used, for review and approval. The manufacturers' sample shall be used as the 'standard' for comparison testing of all lots of coating shipped for this project. No coating will be accepted which has settled badly, gelled, or caked in the container as determined by the CEI. Any sediment that has occurred (in the container) during shipment shall be dispersed with paddle mixing. Containers that are not factory sealed and in good condition to prevent moisture contamination of the products shall be rejected.
7. Textured Coatings of America, Inc. has prepared specific in-house batch numbers for each of the colors used in this contract. The batch numbers for Expressway Authority Concrete Coating Projects are as follows:
   Dark Brown-Color 33446, Batch 40304-103
   Light Brown-Color 33690, Batch 40304-102
   Dark Green-Color 34227, Batch 40304-101
   All samples submitted for review shall match the in-house colors above.
   Light Gray-Color 36622, Batch n/a
8. After surface preparation of and before coating application to concrete surfaces test for the presence of capillary moisture utilizing ASTM D 4263, "Standard Test Method for indicating Moisture in Concrete by the Plastic Sheet Method" or other method approved by the Engineer. Do not apply coating if moisture is detected.

M. ELEVATION MARKERS
1. Note all Elevations are Per NAVD 1988.
2. Markers Recording the Elevation Shall Be Furnished and Installed by the Contractor in Accordance with Index 420.

N. BID ITEM NOTES
1. Payment for Incidental Items not specifically covered in the individual Bid Items shall be included in the Contract Unit Price for the Bid Items.
2. For Summary of Bridge Pay Items see Summary of Bridge Pay Items and Pipe Hanger Details Sheet.
3. For Traffic Control Bid Item Notes, see Roadway Plans.
4. Non-standard Composite Neoprene Bearing Pads shall be furnished by the Contractor, see individual Bridge Superstructure Detail Sheets. Bid Item No. 400-147 includes Quantities for Non-standard and Standard Pads.
5. Refer to Index No. 21210 for payment of Embedded Conduit in Barriers.
6. See Retaining Wall General Notes Sheet for additional Bid Item Notes.
7. The Cost of the Embedded Junction Boxes within the Bridge Deck Shall be included in The Cost of Class II Concrete (Superstructure).
8. The Cost of Silicone Joints shall be paid for under Item 458-1-11, Bridge Expansion Joint.
9. The Approach Slab Sheets are included with the Bridge Plans. All Quantities that are associated with the individual Approach Slabs are included with the Quantities for their respective Bridges.
10. The Cost of Soil Reinforcement and Fasteners for End Bents shall be included in the cost of the Retaining Wall System.

O. BARRIERS
Refer to Design Standards Index No. 490 for treatment of Skewed Traffic Railing, Parapets and Traffic Separators.

P. STRUCTURAL STEEL:
All Structural Steel shall be in accordance with ASTM A709, Grade 50.
1. CHARPY V-NOTCH: All ASTM A709 structural steel as designated on the plans, shall receive Charpy V-Notch testing in accordance with ASTM A709 and supplemental requirement S83 or S84 as noted below.
   a) Redundant members, as designated on the plans, shall be tested in accordance with Table S1.2 (Zone 1) of ASTM A709 (S83).
   b) Non-redundant members, as designated on the plans, shall be tested in accordance with Table S1.3 (Zone 1) of ASTM A709 (S84).
   All other structural steel shall meet the Charpy V-Notch test requirements specified in Specifications Section 962.
2. STEEL FABRICATION: Structural steel for girders and girder framing, diaphragms, cross bracing, etc., shall be ASTM A709. Fabrication shall be performed in accordance with the current applicable edition of the AASHTO/AWS D1.5 Bridge Welding Code. Fabricators of structural steel girders and girder framing shall have the AISC Quality Certification of Major Steel Bridges and AISC Fracture Critical Members endorsement.
3. WELDING:
   a) Welding details and operations shall be in accordance with the current edition of the AASHTO/AWS D1.5 Bridge Welding Code. Welding procedures shall be submitted and approved prior to welding on the project. Welds requiring non-destructive testing shall be radiographically inspected, except where the geometry of the region of the weld will not permit satisfactory information to be secured for verifications of the weld quality. When such geometrical conditions exist, other inspection procedures or combinations of procedures such as Ultrasonic Inspection, Dye Penetrant Inspection and/or Magnetic Particle Inspection, shall be used. Non-destructive Testing shall be performed as required by the current edition of the AASHTO/AWS D1.5 Bridge Welding Code.
   b) Field or Shop welding to any Structural Steel for the purpose of attaching erection hardware, or for anchoring conduits for lighting shall not be permitted. Proposed method of anchoring conduits/boxes for lighting shall be formally submitted to the Engineer for approval. Shear Connector Installation is governed by OSHA Steel Erection Rule.
   c) The following members are classified as ancillary members in accordance with the current edition of the AWS D1.5 Bridge Welding Code:
      - Expansion Joint Welds
      - Drainage System Welds
4. FRACTURE CRITICAL MEMBERS: See framing plans for designation of Fracture Critical Members. Structural components designated on the plans or in the special provisions as "Fracture Critical" shall conform to the provisions of Chapter 12 of the current AASHTO/AWS D1.5 Bridge Welding Code.
5. FIELD CONNECTIONS: All field connections shall be made with 7/8" diameter high strength slip critical type bolts in accordance with ASTM A325 unless otherwise shown.
6. PAINTING: All structural steel shall be painted with a three coat system consisting of an inorganic zinc primer, a polyamide epoxy intermediate coat, followed by an aliphatic urethane top coat that conforms in color to Federal Standard No. 595B Color Number 34227 (Dark Green). The painting shall be performed in accordance with Section 560 of the specifications. All steel surfaces painted in the shop shall be protected from surface contamination (e.g. oil, grease, chlorides etc.). If contamination is suspected and/or field application is not performed within 120 days of primer application, the surfaces shall be pressure cleaned in accordance with SSPC SP 12 (NV-1).
7. The Contractor shall maintain the stability of the Girders until the End Diaphragms and all Cross Frames have been securely connected.

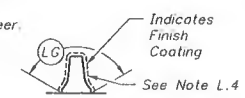

MEDIAN BARRIER SECTION

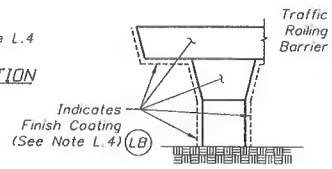

PIERS

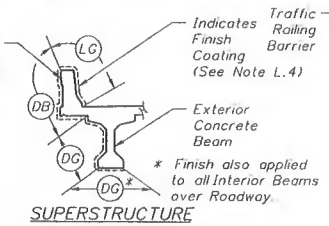

SUPERSTRUCTURE

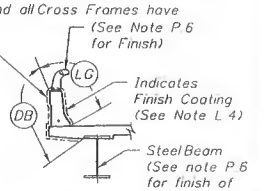

SUPERSTRUCTURE

SURFACE FINISH DETAILS

Q. RAILROAD
1. Construction activities, including temporary shoring proposed for construction in railroad right-of-way, and Shoring for protection of the Railroad due to Foundation Construction shall conform to the CSXT Criteria for Overhead Bridges.
2. Temporary reductions in Vertical or Horizontal Clearance proposed by the Contractor for construction activities shall be coordinated with the Railroad Owner.

R. TEMPORARY SHORING FOR FOUNDATION CONSTRUCTION
1. It will be the Contractor's responsibility to provide a design and construct Shoring, as needed for protection of the Railroad from Foundation Construction, in accordance with the CSXT Criteria for Overhead Bridges and make Submittals to the Railroad as required by that document. Payment for Shoring for Railroad protection as needed for Foundation Construction shall be included in the Cost of the Substructure Concrete.
2. For protection of Existing Structures or Right of Way, it is the Contractor's responsibility to provide a Shoring Design and Construct Shoring as required by Section 455-1.1 of the Specifications and make Submittals as required by that Section. Payment for Shoring, as required for Foundation Construction, shall be included in the Cost of Substructure Concrete.

BRIDGE NOS. 750704, 750707 & 750743

REVISIONS					
DATE	BY	DESCRIPTION	DATE	BY	DESCRIPTION

	NAMES	DATES
DRAWN BY	CAL	01-07
CHECKED BY	TED	01-07
DESIGNED BY	NJB	01-07
CHECKED BY	TED	01-07
APPROVED BY	T.E. Davidson P.E.	

ENGINEER OF RECORD:
PARSONS
2420 LAKEMONT AVE., SUITE 460, ORLANDO, FL 32814
PHONE: (407) 702-6800
CERTIFICATE OF AUTHORIZATION NO. 1836
THOMAS E. DAVIDSON, P.E. LIC. NO. 47131

EXPRESSWAY AUTHORITY

ROAD NO.	SR 414
COUNTY	ORANGE
FINANCIAL PROJECT ID	414-211

SHEET TITLE: GENERAL NOTES (2 OF 2)

PROJECT NAME: MAITLAND BLVD. EXTENSION SR 414 SECTION 211

SHEET NO. 8-6

p003/062 3/28/2007 8:58:38 AM P:\646262\646262\struct\0Common_Shts\0GENERALNOTES02.DGN

PARSONS

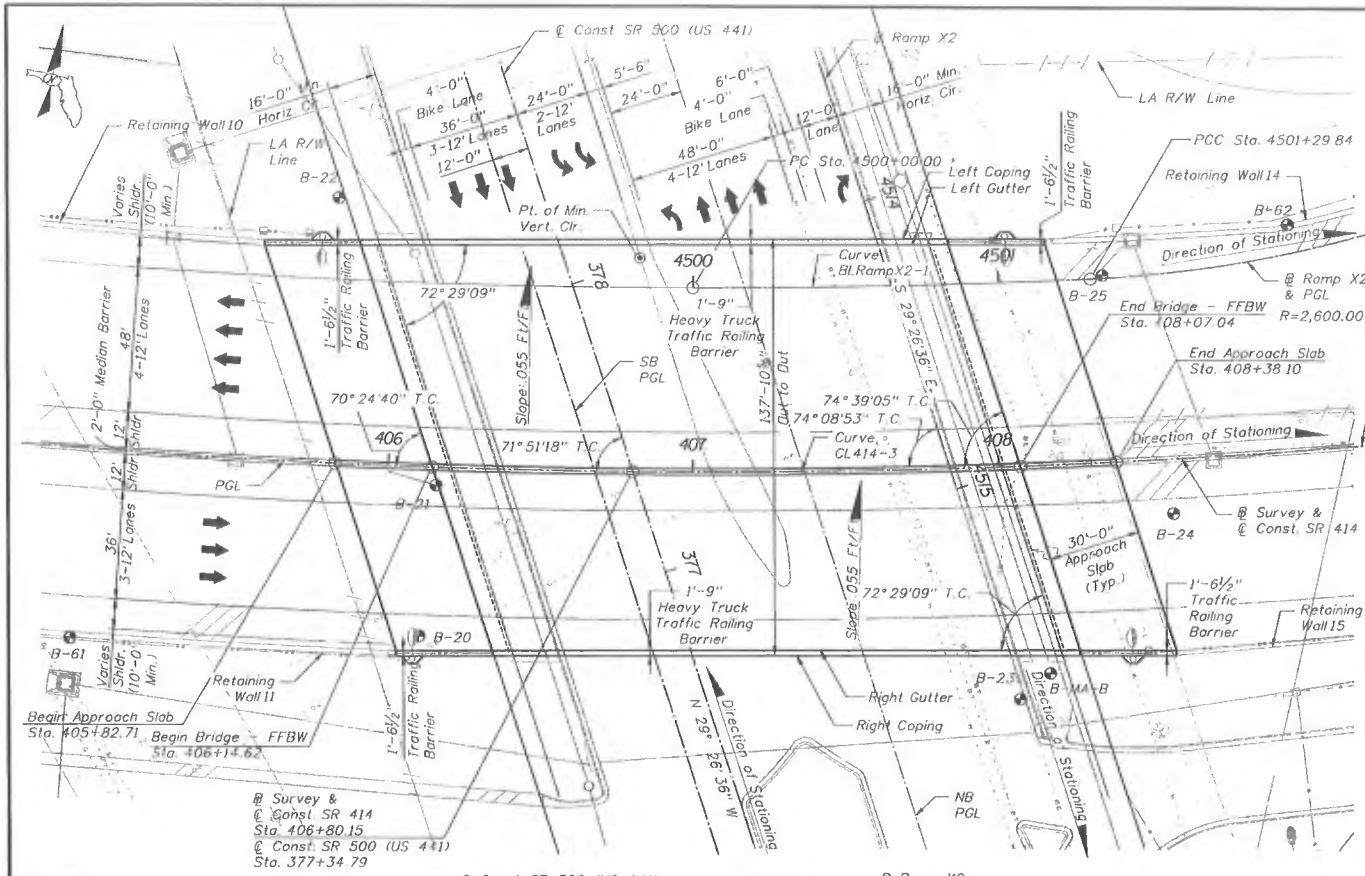

PLAN

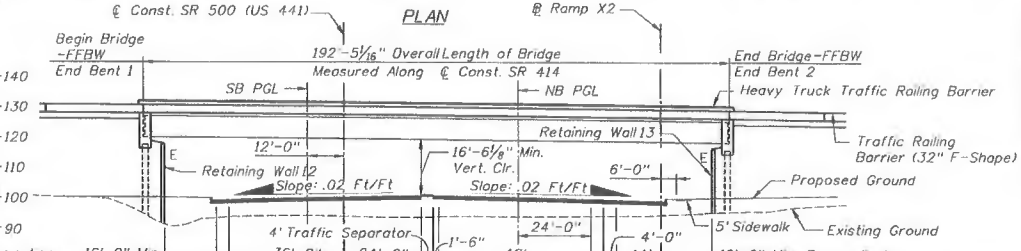

ELEVATION

Notes:
1. For additional Utilities information, refer to Roadway Plans.
2. Refer to Retaining Wall Plans for additional retaining wall layout information.
3. For additional Superelevation Transition information, refer to Roadway Plans.
4. Bridge copings are set to a tangent for Potential Aesthetic Treatments.
5. The Traffic Barrier and Heavy Railing Barrier matches along Gutter Line. See Retaining Wall Detail Sheet for Detail of Barrier adjustment.
6. See Roadway Plans for cross-slopes of US 441 under SR 414.
7. Refer to Lighting Plans for Additional Information. See Index 21200 for Light Pole Pilaster details and information.

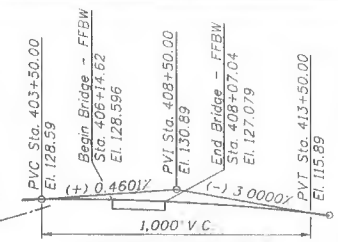

PROFILE GRADE DATA
SR 414

Curve CL 414-3
(PI Sta = 415+75.82)
Δ = 43°52'27" LT
T = 1,047.15'
L = 1,990.95'
R = 2,600.00'
e = 0.055
(PC Sta = 405+28.67)
(PT Sta = 425+19.62)

Curve BLRAMPX2-1
(PI Sta = 4500+64.93)
Δ = 2°55'48" LT
T = 64.93
L = 129.84'
R = 2,539.00'
(PC Sta = 4500+00.00)
(PT Sta = 4501+29.84)

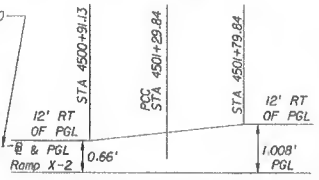

SUPERELEVATION TRANSITION
(RAMP X-2)

TRAFFIC DATA - SR 500 (US 441)
Year 2009 AADT > 36,400
Year 2029 AADT > 41,300
K = 9.2%
D = 57.9%
T = 10% (24 Hour)
Design Speed = 45 MPH

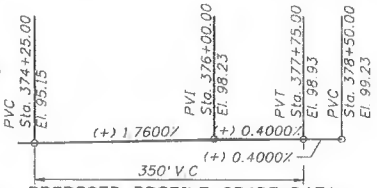

PROPOSED PROFILE GRADE DATA
SR 500 (US 441)

LEGEND
- Traffic Lanes
- Denotes Location of SPT Boring
- Bridge Mounted Light Pole
- FFBW Front Face of Backwall

TRAFFIC DATA - SR 414
Year 2009 AADT > 37,700
Year 2029 AADT > 65,100
K = 9.2%
D = 68%
T = 10% (24 Hour)
Design Speed = 70 MPH

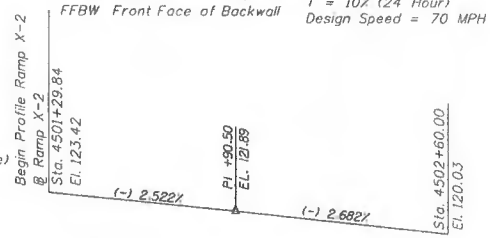

PARTIAL PROPOSED PROFILE GRADE DATA
RAMP X-2

Note: Arch, Pylon & Thrust Block not shown for clarity (See Arch Detail Sheets). BRIDGE NO. 750743

REVISIONS					
DATE	BY	DESCRIPTION	DATE	BY	DESCRIPTION

	NAMES	DATES
DRAWN BY	SDM	01-07
CHECKED BY	TED	01-07
DESIGNED BY	NJB	01-07
CHECKED BY	HGL	01-07
APPROVED BY	T.E. Davidson P.E.	

ENGINEER OF RECORD: PARSONS
2435 LAKEMONT AVE., SUITE 400, ORLANDO, FL 32814
PHONE: (407) 702-6600
CERTIFICATE OF AUTHORIZATION NO. 1938
THOMAS E. DAVIDSON, P.E. LIC. NO. 47131

EXPRESSWAY AUTHORITY

ROAD NO.	SR 414
COUNTY	ORANGE
FINANCIAL PROJECT ID	414-211

SHEET TITLE: PLAN AND ELEVATION

PROJECT NAME: MAITLAND BLVD. EXTENSION SR 414 OVER SR 500 (US 441)

SHEET NO. B3-1

p0085408 1/3/2007 4:47:31 PM P:\646262\646262\struct\SR441\B3PLANELEVOI.DGN

PARSONS

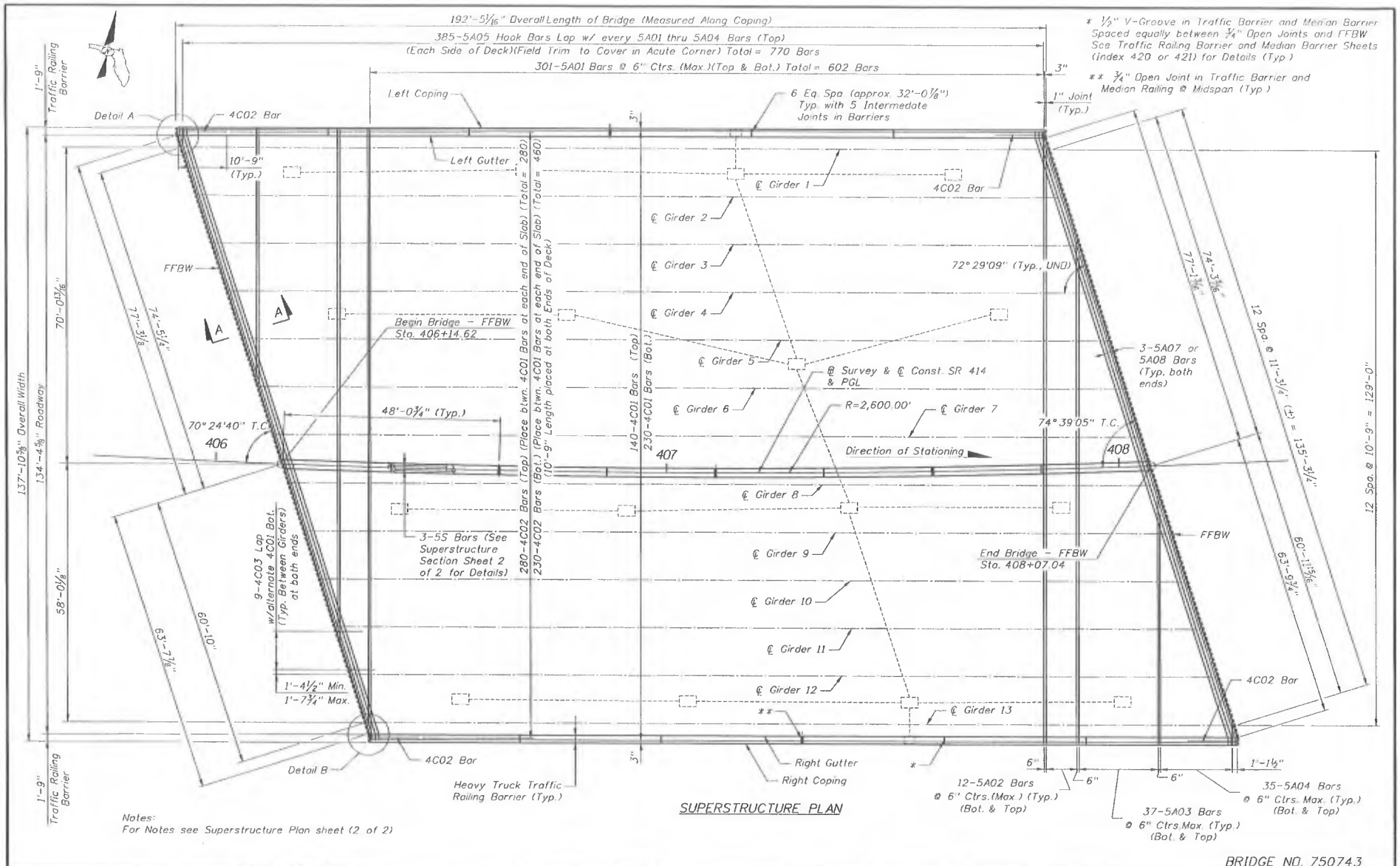

SUPERSTRUCTURE PLAN

Notes:
For Notes see Superstructure Plan sheet (2 of 2)

BRIDGE NO. 750743

REVISIONS						
DATE	BY	DESCRIPTION	DATE	BY	DESCRIPTION	

	NAMES	DATES
DRAWN BY	CAL/SDM	01-07
CHECKED BY	HGL	01-07
DESIGNED BY	SDM	01-07
CHECKED BY	TED	01-07
APPROVED BY	T.E. Davidson P.E.	

ENGINEER OF RECORD: PARSONS
2109 LAKEMONT AVE., SUITE 460 ORLANDO, FL 32814
PHONE: (407) 703-6800
CERTIFICATE OF AUTHORIZATION NO. 1858
THOMAS E. DAVIDSON, P.E. LIC. NO. 47131

EXPRESSWAY AUTHORITY

ROAD NO.	SR 414
COUNTY	ORANGE
FINANCIAL PROJECT ID	414-211

SHEET TITLE: SUPERSTRUCTURE PLAN (1 OF 2)

PROJECT NAME: MAITLAND BLVD. EXTENSION SR 414 OVER SR 500 (US 441)

SHEET NO. B3-18

33259 3/30/2007 3:43:18 PM P:\646262\646262\struct\SR441\b3Super101.dgn

PARSONS

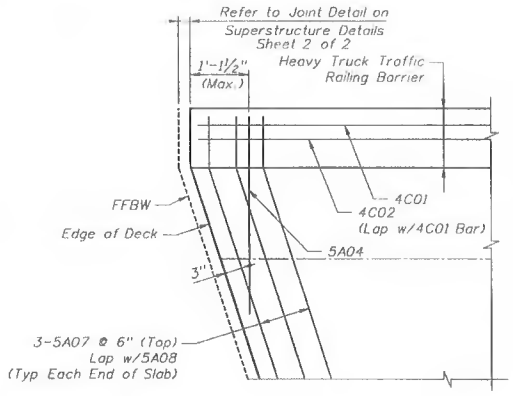

DETAIL A

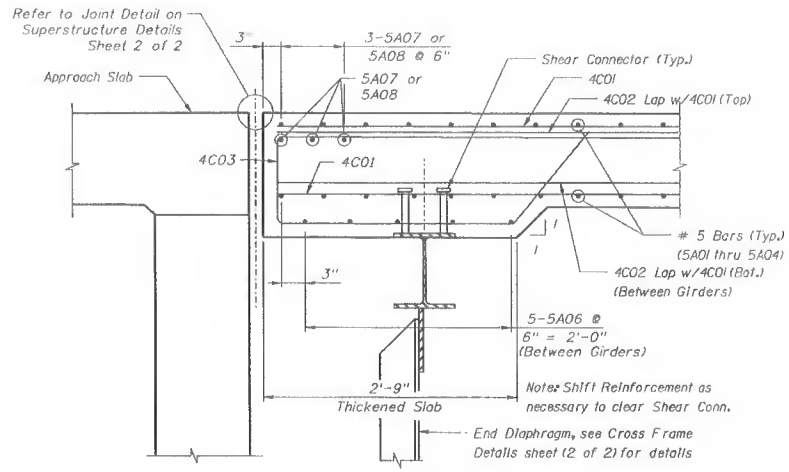

SECTION A-A

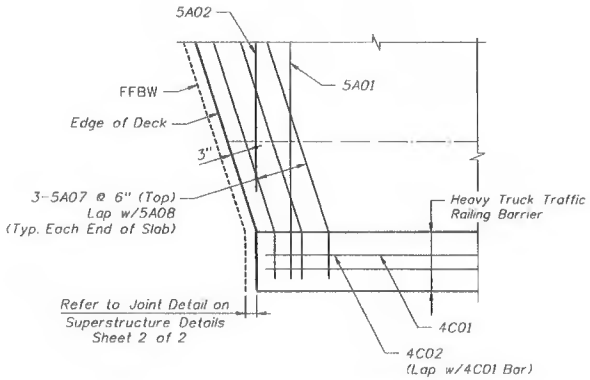

DETAIL B

SUPERSTRUCTURE NOTES

1) All Reinforcing steel shall have 2 inch concrete cover, unless noted otherwise.
2) For Information on Superstructures, See Superstructure Section Sheets and Superstructure Detail Sheets.
3) For Rebar Listing See Reinforcing Bar List Sheet.
4) For additional rebar information See Standard Bar Bending Details, Sheet (Index 21300).
5) Placing Deck Slab Concrete
   The slab shall be placed in one continuous pour beginning at one End Bent and proceeding toward the opposite End Bent.
6) Alternate location of lap splices for adjacent bars, thus:

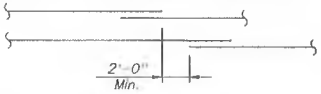

7) Contractor shall submit Shop Drawings for Method of Underdeck Lighting Attachment and Bracing.
8) Luminaire #UD-201 located at Sta. 406+14.50 offset 65.50' Left.
   Luminaire #UD-202 located at Sta. 406+25.80 offset 34.00' Left.
   Luminaire #UD-203 located at Sta. 406+41.00 offset 9.20' Right.
   Luminaire #UD-204 located at Sta. 406+55.30 offset 51.60' Right
   Luminaire #UD-205 located at Sta. 406+67.40 offset 67.50' Left
   Luminaire #UD-206 located at Sta. 406+77.50 offset 35.00' Left.
   Luminaire #UD-207 located at Sta. 406+91.20 offset 8.60' Right.
   Luminaire #UD-208 located at Sta. 407+04.70 offset 51.30' Right.
   Luminaire #UD-209 located at Sta. 407+15.50 offset 67.10' Left.
   Luminaire #UD-210 located at Sta. 407+29.00 offset 24.30' Left.
   Luminaire #UD-211 located at Sta. 407+40.30 offset 7.90' Right
   Luminaire #UD-212 located at Sta. 407+52.80 offset 51.80' Right.
   Luminaire #UD-213 located at Sta. 407+64.80 offset 66.50' Left.
   Luminaire #UD-214 located at Sta. 407+74.30 offset 34.80' Left.
   Luminaire #UD-215 located at Sta. 407+86.90 offset 8.70' Right.
   Luminaire #UD-216 located at Sta. 407+98.90 offset 52.70' Right.
9) Luminaire locations identified are an Embedded Junction Box for Underdeck Luminaires. Shift Deck Reinforcing Steel around Junction Box as necessary. See Lighting Plans for Details of Box.
10) The Item identified is an 8"x8"x6" Deep Embedded Junction Box (in outside Traffic Railing Barriers) for Underdeck Luminaires. Shift Vertical Reinforcing Steel as necessary in Barrier.

BRIDGE NO. 750743

REVISIONS											
DATE	BY	DESCRIPTION	DATE	BY	DESCRIPTION		NAMES	DATES	ENGINEER OF RECORD: PARSONS, 2420 LAKEMONT AVE., SUITE 450, ORLANDO, FL 32814, PHONE: (407) 703-6800, CERTIFICATE OF AUTHORIZATION NO. 1638, THOMAS E. DAVIDSON, P.E. LIC. NO. 47151	ROAD NO.	SR 414	SHEET TITLE: SUPERSTRUCTURE PLAN (2 OF 2)	SHEET NO.
						DRAWN BY	CAL	01-07		COUNTY	ORANGE	PROJECT NAME: MAITLAND BLVD. EXTENSION SR 414 OVER SR 500 (US 441)	B3-19
						CHECKED BY	HGL	01-07					
						DESIGNED BY	SDM	01-07					
						CHECKED BY	TED	01-07		FINANCIAL PROJECT ID	414-211		
						APPROVED BY	T.E. Davidson P.E.						

EXPRESSWAY AUTHORITY

33259 1/5/2007 4:55:47 PM P:\646262\646262\structs\SR44\b3Super102.dgn

PARSONS

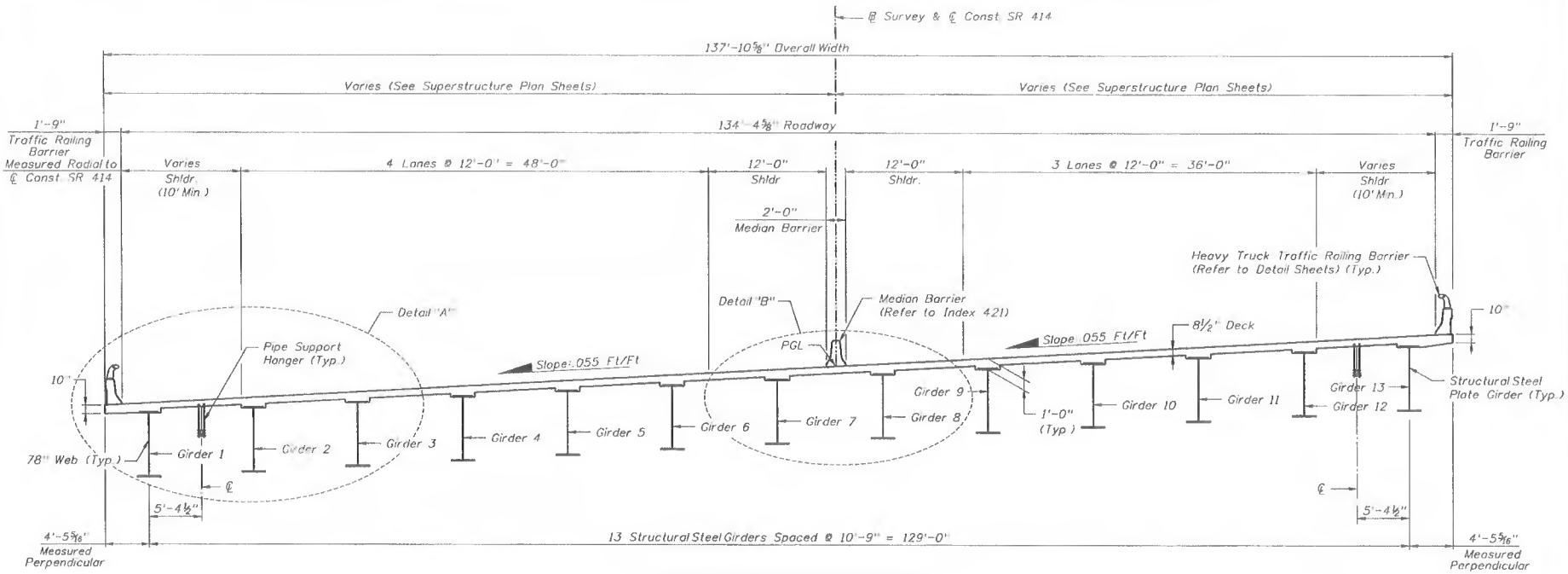

TYPICAL SUPERSTRUCTURE SECTION

GENERAL NOTES:

1. For Details A & B, see Superstructure Section Sheet (2 of 2).
2. All Transverse Dimensions Shown are Measured Perpendicular to ℄ Const SR 441 Unless Noted Otherwise (UND).
3. For Details of Traffic Railing Barriers and Median Barriers, Including Additional Reinforcing Originating in the Deck Slab, See Superstructure Section Sheet (2 of 2) and Heavy Truck Traffic Railing Barrier Details Sheets.
4. Refer to Superstructure Plan Sheets for layout of Deck Bars.
5. For Fiber Optic Pipe Hanger Details See Summary of Bridge Pay Items and Pipe Hanger Details Sheet.
6. See Framing Plan for Location of Crossframes, Diaphragms, and other Framing Details.

GIRDER JACKING NOTES (BEARING PAD REPLACEMENT):

1. Jacks, materials, labor and equipment necessary to remove and replace the bearing pads are not included in the contract to construct the bridge.
2. The girders shall be jacked at jacking Stiffener locations shown on the Superstructure Details Sheets.

Loads	Loads / Jack (End Bents)
DL	132k
LL+I	139k
DL+LL+I	271k
No. of Jacks	26 each End Bent

3. Loosen all nuts for Anchor Bolts prior to jacking. All Anchor Bolts shall be double nutted and jammed tight after bearing replacement is complete. Provide ½" gap between nut and washer for free movement of girder.
4. The Girders shall be jacked simultaneously.
5. All Jacks shall bear on steel bearing plates of sufficient thickness so as to prevent damage to the concrete substructure. All concrete surfaces beneath the bearing plates shall be ground flat, or high strength grout beds can be used. The Minimum Plate size for a each Jack is 1" x8"x8".
6. Refer to Superstructure Details Sheets for Location of Jacking Stiffeners.
7. Jacking loads are for each Jack. Twenty-six (26) Jacks are required at each End Bent.

BRIDGE NO. 750743

REVISIONS

DATE	BY	DESCRIPTION	DATE	BY	DESCRIPTION

	NAMES	DATES
DRAWN BY	MC/SDM	01-07
CHECKED BY	HGL	01-07
DESIGNED BY	SDM	01-07
CHECKED BY	TED	01-07
APPROVED BY	T.E. Davidson P.E.	

ENGINEER OF RECORD: PARSONS
3430 LAKEMONT AVE., SUITE 400, ORLANDO, FL 32814
PHONE: (407) 703-6100
CERTIFICATE OF AUTHORIZATION NO. 1938
THOMAS E. DAVIDSON, P.E. LIC. NO. 47151

EXPRESSWAY AUTHORITY

ROAD NO.	SR 414
COUNTY	ORANGE
FINANCIAL PROJECT ID	414-211

SHEET TITLE: SUPERSTRUCTURE SECTION (1 OF 2)

PROJECT NAME: MAITLAND BLVD. EXTENSION SR 414 OVER SR 500 (US 441)

SHEET NO. B3-20

33259 1/5/2007 4:15:48 PM F:\646262\646262\atruck\SR441\b3typicalsection01.dgn

PARSONS

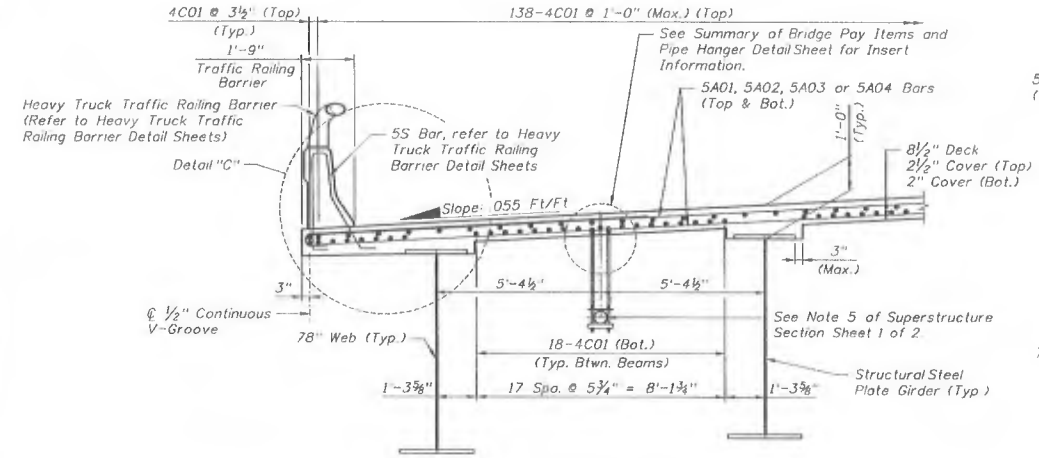

DETAIL "A"

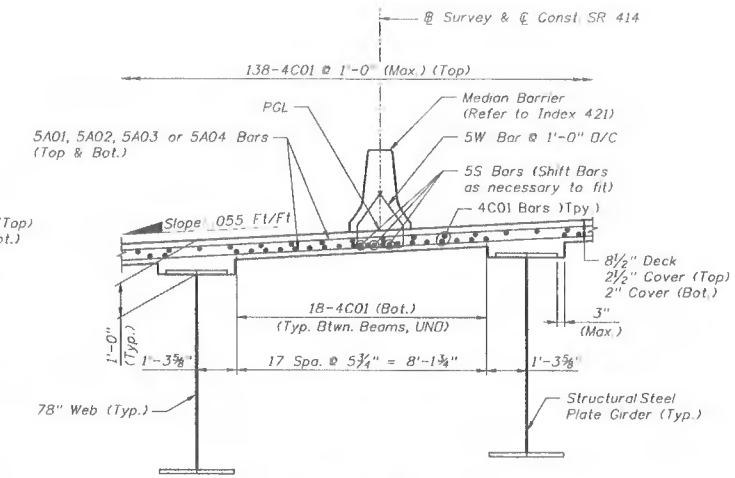

DETAIL "B"

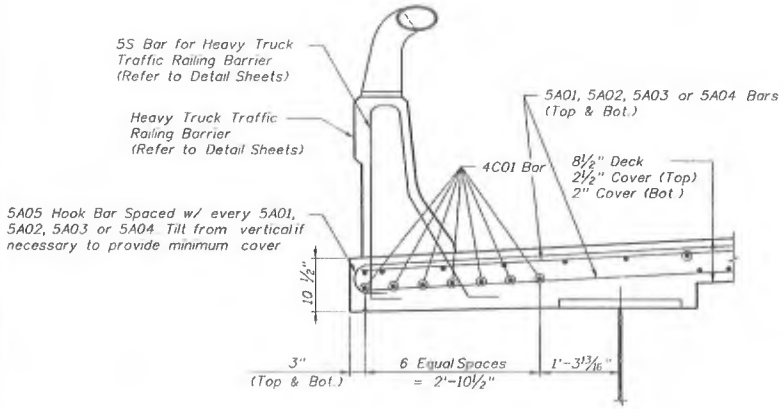

DETAIL "C"

ESTIMATED SUPERSTRUCTURE QUANTITIES		
ITEM	UNIT	QUANTITY
Class II (Bridge Deck) Concrete (Superstructure)	C.Y.	782.4
Reinforcing Steel (Superstructure)	L.B.	180.969
Median Traffic Railing Barrier (32" F-Shape) *	L.F.	257
Heavy Truck Traffic Railing Barrier	L.F.	512

* Railing along Approach slab included.

Note:
Refer to Superstructure Section (1 of 2) for General Notes and Jacking Information.

BRIDGE NO. 750743

REVISIONS

DATE	BY	DESCRIPTION	DATE	BY	DESCRIPTION

	NAMES	DATES
DRAWN BY	MC/SDM	01-07
CHECKED BY	HGL	01-07
DESIGNED BY	SDM	01-07
CHECKED BY	TED	01-07
APPROVED BY	T.E. Davidson P.E.	

ENGINEER OF RECORD:
PARSONS
3400 LAKEMONT AVE., SUITE 480, ORLANDO, FL 32814
PHONE: (407) 703-8600
CERTIFICATE OF AUTHORIZATION NO. 1836
THOMAS E. DAVIDSON, P.E. LIC NO. 47151

EXPRESSWAY AUTHORITY

ROAD NO.	SR 414
COUNTY	ORANGE
FINANCIAL PROJECT ID	414-211

SHEET TITLE: SUPERSTRUCTURE SECTION (2 OF 2)

PROJECT NAME: MAITLAND BLVD. EXTENSION SR 414 OVER SR 500 (US 441)

SHEET NO. B3-21

33259 1/5/2007 4:15:49 PM P:\646262\646262\structr\3SR44\b3typicalsection02.dgn

PARSONS

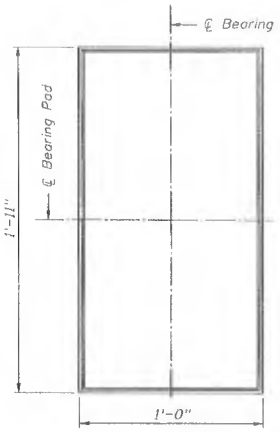

PLAN

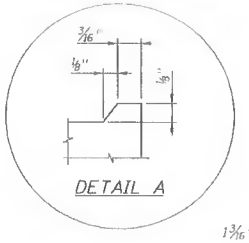

DETAIL A

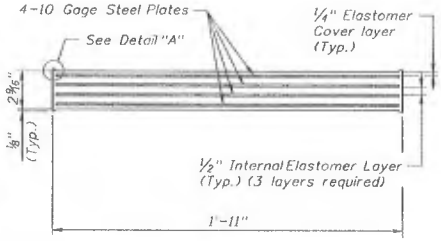

PAD SECTION

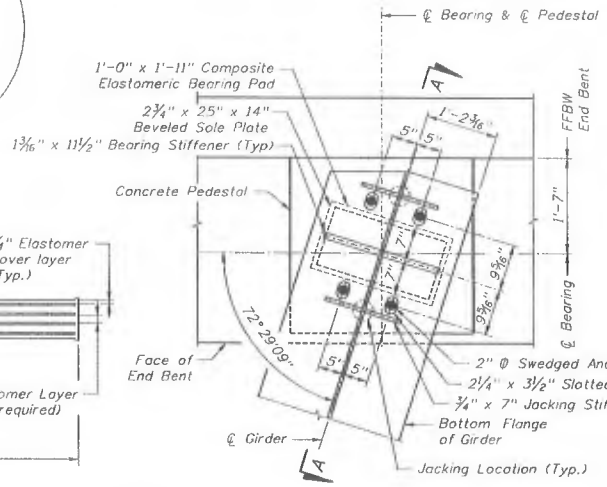

END BENT BEARING
(PARTIAL PLAN)

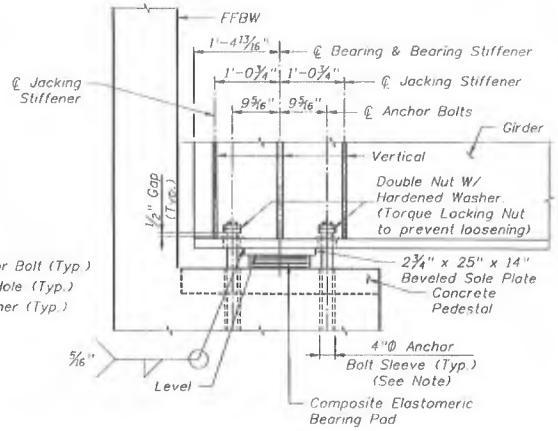

SECTION A-A

NON-STANDARD COMPOSITE BEARING QUANTITIES			
Bridge Number	Girder Type	Pad Type	Number of Required Pads
750743	78" Steel	Non-Standard	26

NON-STANDARD COMPOSITE BEARING

Note:
Anchor Bolts to have a minimum 15" Embedment Length from the top of the End Bent Cap.

NON-STANDARD COMPOSITE BEARING PAD NOTES:
1. Neoprene in all bearing pads shall have a minimum Grade 50 durometer hardness.
2. Steel Plates in bearing pads shall conform to ASTM A1011 Grade 36, Type 1.
3. Bearing Seat shall be finished level.
4. Non-Standard Composite Neoprene Bearing Pads shall be paid for under, Item No. 400-147.
5. Variations in pad dimensions will be allowed provided the revised pads meet the Specifications, and are approved by the Engineer.
6. See Bid Item Notes for quantities of Bearing pad.

BRIDGE NO. 750743

REVISIONS

DATE	BY	DESCRIPTION	DATE	BY	DESCRIPTION

	NAMES	DATES
DRAWN BY	CAL	01-07
CHECKED BY	TED	01-07
DESIGNED BY	HGL	01-07
CHECKED BY	TED	01-07
APPROVED BY	T.E. Davidson P.E.	

ENGINEER OF RECORD:
PARSONS
3430 LAKEMONT AVE., SUITE 400, ORLANDO, FL 32814
PHONE: (407) 702-6600
CERTIFICATE OF AUTHORIZATION NO. 1838
THOMAS E. DAVIDSON, P.E. LIC. NO. 47131

EXPRESSWAY AUTHORITY

ROAD NO.	SR 414
COUNTY	ORANGE
FINANCIAL PROJECT ID	414-211

SHEET TITLE: SUPERSTRUCTURE DETAILS (1 OF 2)

PROJECT NAME: MAITLAND BLVD. EXTENSION SR 414 OVER SR 500 (US 441)

SHEET NO. B3-22

33259 1/5/2007 4:15:49 PM P:\646262\646262\struct\SR441\b3SuperstDet01.dgn

PARSONS

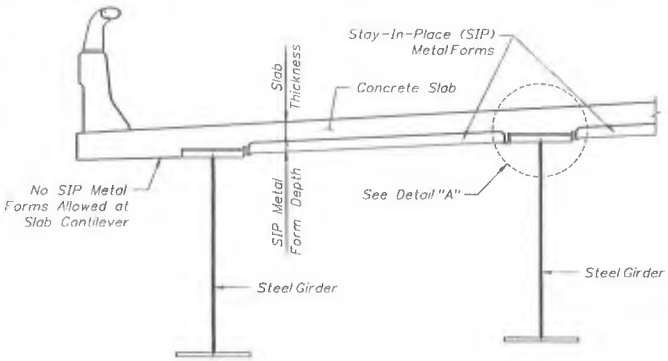

PARTIAL SECTION THRU SUPERSTRUCTURE

(Showing Typical Details & Notes for SIP Metal Forms)

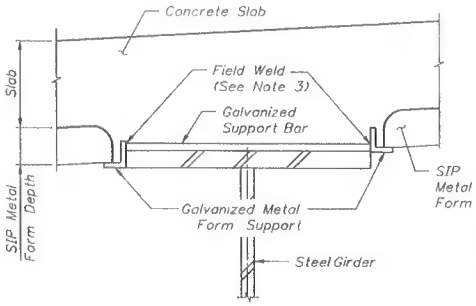

DETAIL "A"

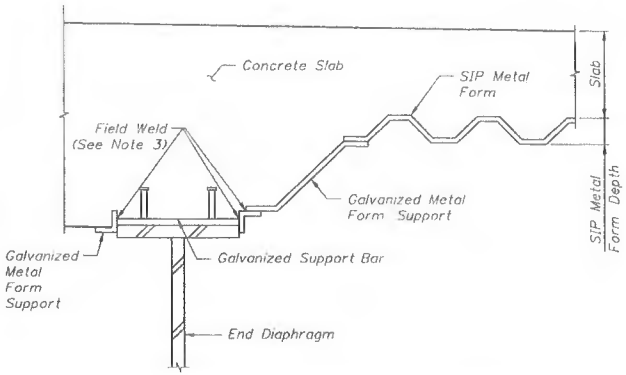

PARTIAL SECTION THRU END OF SPAN

STAY-IN-PLACE METAL FORM NOTES:

1. The Superstructure Concrete Quantities shown do not include the concrete required to fill the stay-in-place metal form flutes.
2. The cost of the stay-in-place metal forms, the concrete required to fill the flutes, the metal form attachments and accessories and all miscelleneous items required to install the forms shall be included in the contract Unit Price for the Superstructure Concrete.
3. Do not Weld to nor Permit Weld Spatter on Supporting Steel Girders, Diaphragm, Bracing, etc. Electrical Grounding to Structural Steel is Prohibited. See Section 400 of the Specifications for Field Welding of SIP Forms in Place and Painting of the Top Flange.

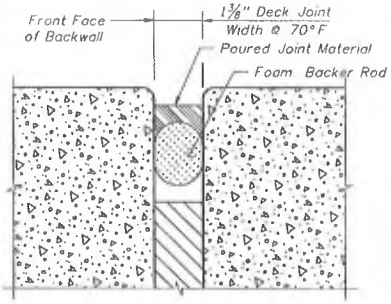

SECTION THRU DECK JOINT
JOINT DETAIL

Note:
Use Poured Joint with Backer Rod Expansion Joint System in conformance with Design Standards Index 21110.
The Cost of Joints Shall be included under the Contract Unit Price For Pay Items No. 400-2-4 "Concrete Class II (Superstructure)."

EXPANSION JOINT DATA TABLE (INDEX 21110)

Location	Skew Angle	Total Design Movement: In Dir. of Movement	Total Design Movement: Perpendicular to ℄ Joint: Along Skew	Total Design Movement: Perpendicular to ℄ Joint: At Barr.	Dim. 'A' * Adjustment per 10°F: Along Skewed Joint	Dim. 'A' * Adjustment per 10°F: At Barrier
End Bent 1	17.5°	0.47"	0.45"	0.47"	0.07"	0.07"
End Bent 2	17.5°	0.47"	0.45"	0.47"	0.07"	0.07"

*Adjustment Based on 1/2 Span Length Thermal Movement.

BRIDGE NO. 750743

REVISIONS					
DATE	BY	DESCRIPTION	DATE	BY	DESCRIPTION

	NAMES	DATES
DRAWN BY	CAL	01-07
CHECKED BY	TED	01-07
DESIGNED BY	HGL	01-07
CHECKED BY	NJB	01-07
APPROVED BY	T.E. Davidson P.E.	

ENGINEER OF RECORD:
PARSONS
3430 LAKEMONT AVE., SUITE 400, ORLANDO, FL 32814
PHONE: (407) 703-8800
CERTIFICATE OF AUTHORIZATION NO. 1838
THOMAS E. DAVIDSON, P.E. LIC. NO. 47131

EXPRESSWAY AUTHORITY

ROAD NO.	SR 414
COUNTY	ORANGE
FINANCIAL PROJECT ID	414-211

SHEET TITLE: SUPERSTRUCTURE DETAILS (2 OF 2)

PROJECT NAME: MAITLAND BLVD. EXTENSION SR 414 OVER SR 500 (US 441)

SHEET NO. B3-23

33259 1/5/2007 4:15:50 PM P:\46262\46262\struct\SR441\b3Super1Det02.dgn

PARSONS

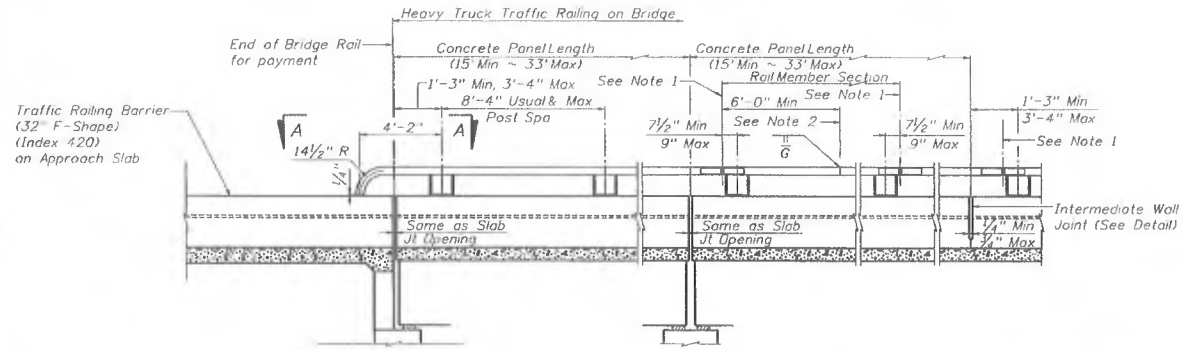

AT ABUTMENT BENTS

AT SLAB EXP JOINTS

AT INTERMEDIATE WALL JOINTS

ROADWAY ELEVATION OF RAIL

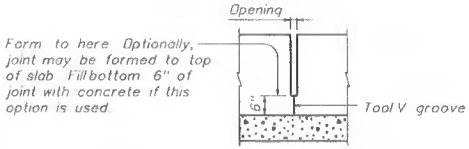

INTERMEDIATE WALL JOINT DETAIL

Note: Provide intermediate wall joints over all slab construction joints, over interior supports on continuous units, and at equal intervals in between as necessary to maintain a 33' maximum length of unbroken wall.

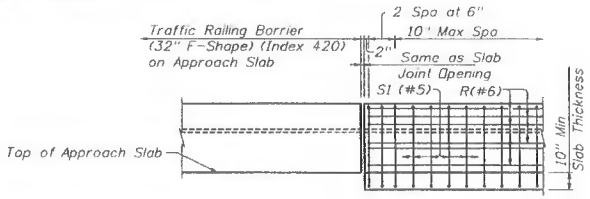

ELEVATION SHOWING TYPICAL REINFORCING PLACEMENT
(See Note 3)

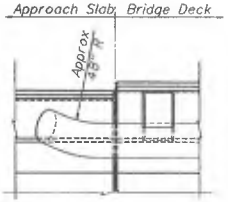

VIEW A-A
(Showing Rail Member turn-down)

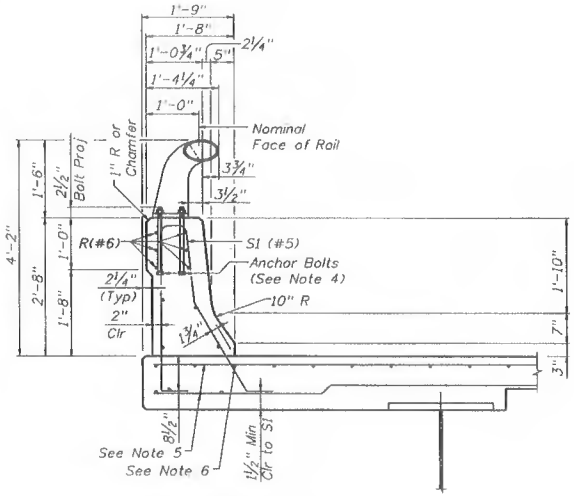

SECTION THRU RAIL
(See Note 3)

NOTES

1) ℄ Exp Jt or Splice Jt as required.
2) One shop splice per panel is permitted with minimum 85 percent penetration. Weld flaws resulting in no less than 60 percent penetration are permissible in the upper and lower 90 degree quadrants of the members. The weld may be square groove, double vee groove, or single groove as shown on the approved weld procedure. Grind smooth.
3) The details on this sheet are intended for mounting on the bridge deck only.
4) Three R(#6) bars are placed outside of the anchor bolts.
5) Minimum of #5 bars at 3" Spa (Top) & Minimum of #5 bars at 7" Spa (Bott), or equivalent.
6) Top longitudinal slab bar may be adjusted laterally 3" ± to tie reinforcing.

BRIDGE NO. 750743

REVISIONS					
DATE	BY	DESCRIPTION	DATE	BY	DESCRIPTION

	NAMES	DATES
DRAWN BY	JDB	01-07
CHECKED BY	TED	01-07
DESIGNED BY	JDB	01-07
CHECKED BY	TED	01-07
APPROVED BY	T.E. Davidson P.E.	

ENGINEER OF RECORD:
PARSONS
2430 LAKEMONT AVE., SUITE 480, ORLANDO, FL 32814
PHONE: (407) 702-6900
CERTIFICATE OF AUTHORIZATION NO. 1838
THOMAS E. DAVIDSON, P.E. LIC. NO. 47151

EXPRESSWAY AUTHORITY

ROAD NO.	SR 414
COUNTY	ORANGE
FINANCIAL PROJECT ID	414-211

SHEET TITLE: HEAVY TRUCK TRAFFIC RAILING BARRIER DETAILS (1 OF 2)

PROJECT NAME: MAITLAND BLVD. EXTENSION SR 414 OVER SR 500 (US 441)

SHEET NO. 83-24

33259 1/5/2007 4:51:51 PM P:\646262\646262\structure\SR441\03MiscDetail.DGN

PARSONS

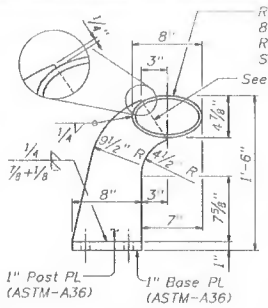

END VIEW OF POST

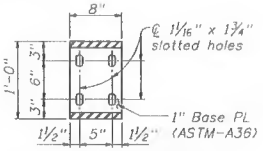

BASE PLATE DETAIL

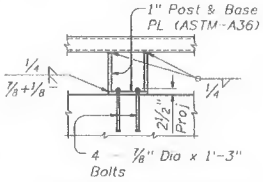

ELEVATION OF POST
(Showing Anchor Bolts)

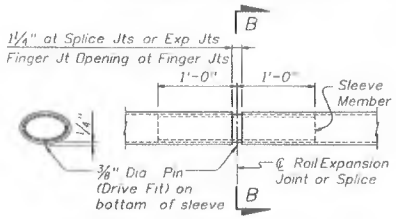

SECTION B-B AT SPLICE OR EXP JTS
TUBE SPLICE DETAIL

RAIL DATA FOR HORIZONTAL CURVES			
	RADIUS TO FACE OF RAIL	MAX CHORD LENGTH	CONSTRUCT OR FABRICATE
Rail Members	Over 2800'	29'-0"	Straight rail sections
	Over 1400' thru 2800'	14'-6"	To required radius or to chords shown (See Note 2)
	Over 700' thru 1400'	7'-3"	
	Thru 700'	Zero	To required radius (See Note 2)

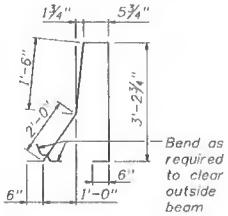

BARS S1 (#5)

TUBE & SLEEVE MEMBERS		
8" x 4 7/8" Ellipse	Splice Member	
Material	Material	Thickness
6" Dia Std Pipe ASTM-A53 E or S Gr B)	ASTM-A53 Gr B	0.353"
	A36 or A500 Gr B	0.339"
	API-5LX52	0.224"
6 5/8" O.D. Pipe x 0.188" API-5LX52	ASTM-A53 Gr B	0.339"
	A36 or A500 Gr B	0.325"
	API-5LX52	0.188"

Notes: Other sections of equal or greater strength are acceptable for sleeves. The major and minor diameters of the rail member may vary +/- 0.1875 inches from plan dimension. However, the difference between the outside diameters of the sleeve and the inside diameters of the rail shall not exceed 0.25 inches

NOTES

1) Pipe may be slotted to fit Plates in lieu of cutting plates to fit pipe, except plates adjacent to tube splice.
2) Shop drawings required for tubular steel sections (may be submitted as 11"x 17" prints, provided they are clearly legible).

GENERAL NOTES

1) This rail is based on the Texas Heavy Truck Barrier (Type HT) which was evaluated based on the results of previous crash tests and approved for a NCHRP Report 350 TL-5 rating. This rail can be used for design speeds of 50 mph and greater when a TL-3 rated guard fence transition is used.
2) This rail requires a 10" Min slab thickness.
3) Rail anchorage details shown on this standard may require modification for select structure types. See appropriate details elsewhere in plans for these modifications.
4) All steel components except reinforcing shall be galvanized unless otherwise shown in the plans.
5) All concrete for railing shall be Class II (Bridge Deck).
6) All reinforcing steel shall be Grade 60. Welded Wire Fabric will not be permitted in this rail.
7) Dimensions relating to reinforcing steel spacing are to centers of bars except as shown.
8) Anchor bolts shall be 7/8" Dia ASTM A325 bolts (or A321 threaded rods with one tack welded hex nut each) with one hex nut and one 2 1/4" O.D. washer (0.193" Min thick) plus one 1 3/4" O.D. hardened steel washer (0.136" Min thick) at each bolt. Optionally use rectangular 3/8 x 2 x 0'-3" A36 plate with 15/16" Dia hole. Nuts shall conform to A563 requirements. The untapped blanks shall be galvanized prior to cutting the threads. Threads for bolts and nuts shall have Class 2A and 2B fit tolerances in accordance with ASME B1.1.
9) The back of railing shall be vertical unless otherwise approved by the Engineer or shown in plans. Rail posts shall be perpendicular to top of adjacent concrete parapet grade. Grout may be used under post base plates if necessary.
10) The Heavy Truck Rail may terminate on the structure if safety considerations so allow. In this case, there will be a transition between the HT rail and a normal traffic railing. See Bridge Layout for limits.
11) Slip-forming this rail is not allowed.
12) Erection drawings showing panel lengths, rail post spacing, and anchor bolt setting shall be submitted to the Engineer for approval.
13) Panel lengths of tube members shall be attached continuously to a minimum of three posts.
14) Average weight of railing with no overlay: 486 plf (Conc)
30 plf (Steel)
15) Heavy Truck Traffic Railing Barrier shall be paid for under Pay Item 521-5-9, Concrete Traffic Railing - Bridge (Special).

BRIDGE NO. 750743

REVISIONS					
DATE	BY	DESCRIPTION	DATE	BY	DESCRIPTION

	NAMES	DATES
DRAWN BY	JDB	01-07
CHECKED BY	TED	01-07
DESIGNED BY	JDB	01-07
CHECKED BY	TED	01-07
APPROVED BY	T.E. Davidson P.E.	

ENGINEER OF RECORD:
PARSONS
3400 LAKEMONT AVE., SUITE 480, ORLANDO, FL 32814
PHONE: (407) 703-6600
CERTIFICATE OF AUTHORIZATION NO. 1838
THOMAS E. DAVIDSON, P.E. LIC. NO. 47151

EXPRESSWAY AUTHORITY

ROAD NO.	SR 414
COUNTY	ORANGE
FINANCIAL PROJECT ID	414-211

SHEET TITLE: HEAVY TRUCK TRAFFIC RAILING BARRIER DETAILS (2 OF 2)

PROJECT NAME: MAITLAND BLVD. EXTENSION SR 414 OVER SR 500 (US 441)

SHEET NO. B3-25

33259 1/5/2007 4:35:52 PM P:\646282\646282\structl\35R441\S3W1scDet02.DGN

PARSONS

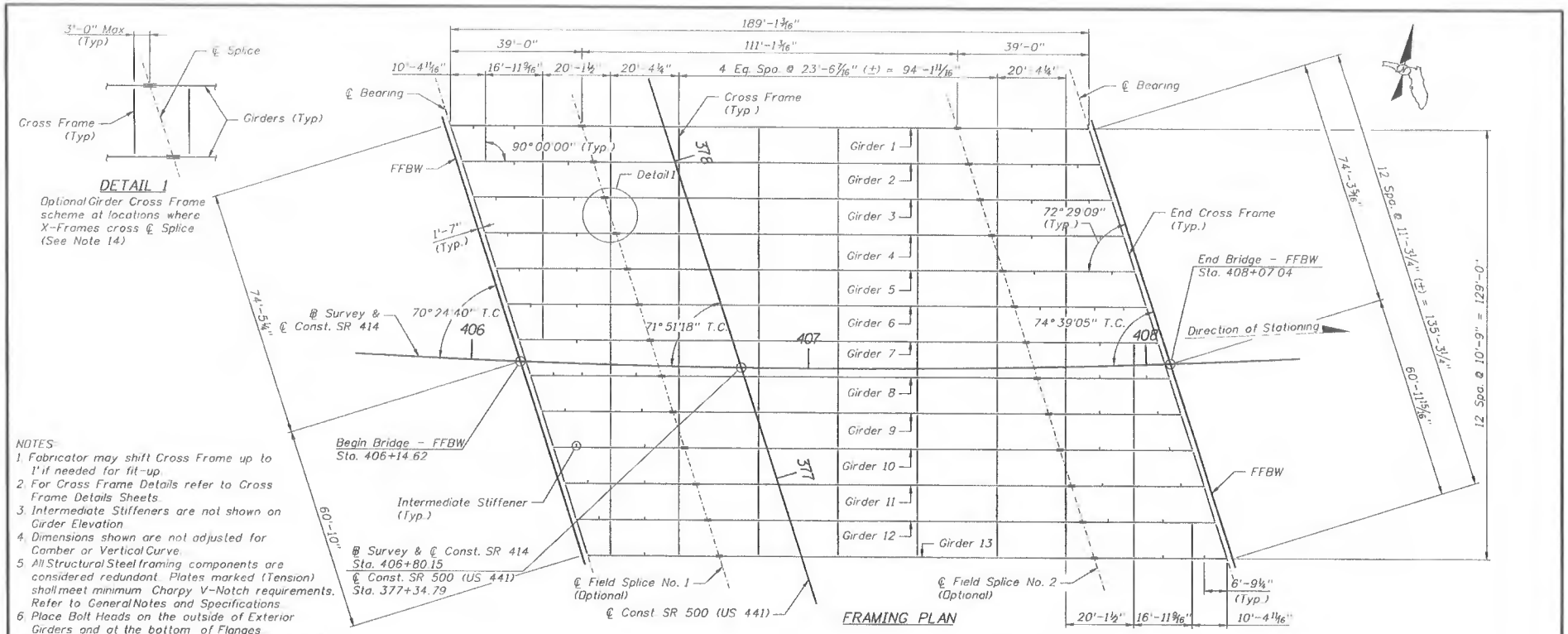

NOTES:

1. Fabricator may shift Cross Frame up to 1' if needed for fit-up.
2. For Cross Frame Details refer to Cross Frame Details Sheets.
3. Intermediate Stiffeners are not shown on Girder Elevation.
4. Dimensions shown are not adjusted for Camber or Vertical Curve.
5. All Structural Steel framing components are considered redundant. Plates marked (Tension) shall meet minimum Charpy V-Notch requirements. Refer to General Notes and Specifications.
6. Place Bolt Heads on the outside of Exterior Girders and at the bottom of Flanges.
7. Bolt Holes for Cross Frames may be oversized in both Plies. All other Holes shall be Standard Size unless noted otherwise.
8. All Welds and Weld Types shall be shown on the Shop Drawings.
9. All Shop Welded Splices shall be Prequalified AWS Complete Joint Penetration (CJP) Groove Weld.
10. Cross Frame Connection Stiffener Plates are not shown on Framing Plan (See Framing Details & Cross Frame Details Sheets).
11. The first web stiffening component (transverse stiffener or cross frame connection stiffener) is located 6'-9¼" along girder from bearing centerline. All other intermediate transverse stiffeners as shown on framing plan, are located at the mid-point between adjacent web stiffening components such as transverse stiffeners, cross frame connection stiffeners or web splices.
12. For Jacking loads, see Superstructure Section Sheets.
13. Jacking Stiffeners (both ends of girders) omitted for clarity, see Framing Details, Cross Frame Details (2 of 2), and Superstructure Details (2 of 2) Sheets for information.
14. The Cross Frame layout as shown in Detail 1 is optional pending difficulties with connection details for the single Cross Frame across the Splice ℄. The cost of the added Cross Frame in this Detail shall be included in the cost of the Lump Sum Bid Item for Structural Steel.

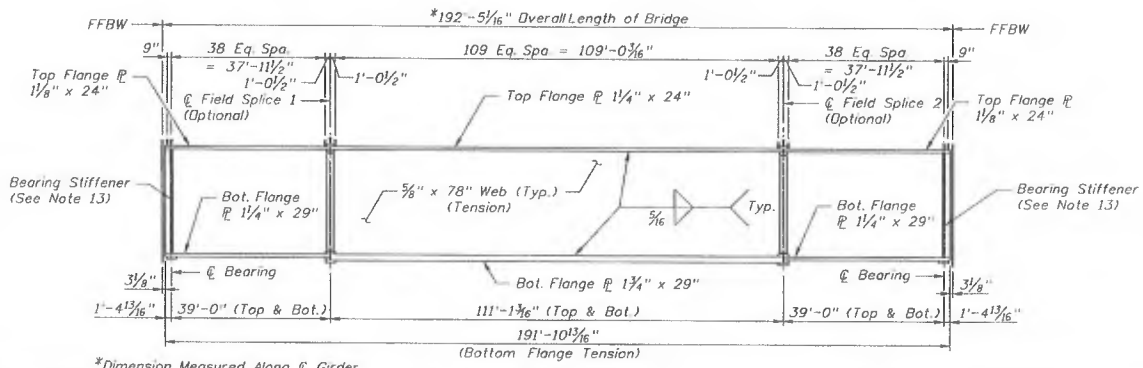

*Dimension Measured Along ℄ Girder on Horizontal Plane

GIRDER ELEVATION

BRIDGE NO. 750743

REVISIONS					
DATE	BY	DESCRIPTION	DATE	BY	DESCRIPTION

	NAMES	DATES
DRAWN BY	CAL/SDM	01-07
CHECKED BY	TED	01-07
DESIGNED BY	NJB	01-07
CHECKED BY	TED	01-07
APPROVED BY	T.E. Davidson P.E.	

ENGINEER OF RECORD: PARSONS
3430 LAKEMONT AVE., SUITE 400, ORLANDO, FL 32814
PHONE: (407) 703-6900
CERTIFICATE OF AUTHORIZATION NO. 1628
THOMAS E. DAVIDSON, P.E. LIC. NO. 47181

EXPRESSWAY AUTHORITY

ROAD NO.	SR 414
COUNTY	ORANGE
FINANCIAL PROJECT ID	414-211

SHEET TITLE: FRAMING PLAN AND GIRDER ELEVATION

PROJECT NAME: MAITLAND BLVD. EXTENSION SR 414 OVER SR 500 (US 441)

SHEET NO. B3-26

33259 1/5/2007 4:55:54 PM P:\646262\646262\struct\35R441\B3FramingPlanDl.dgn

PARSONS

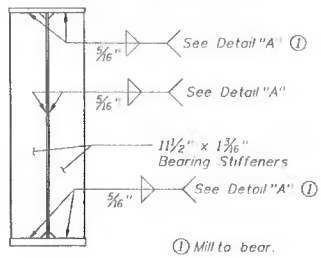

BEARING STIFFENER

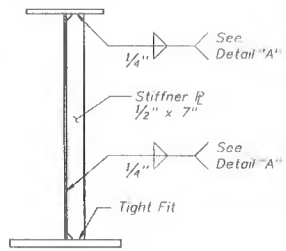

INTERMEDIATE STIFFENER

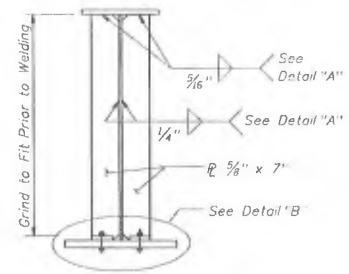

CROSS FRAME STIFFENER

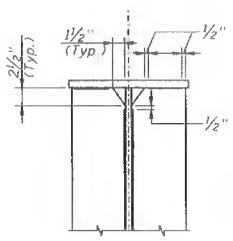

DETAIL "A"

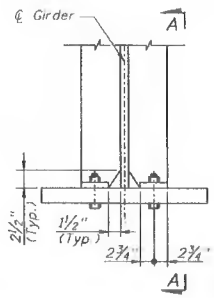

DETAIL "B"
(Typ. Conn. at locations of Tension)

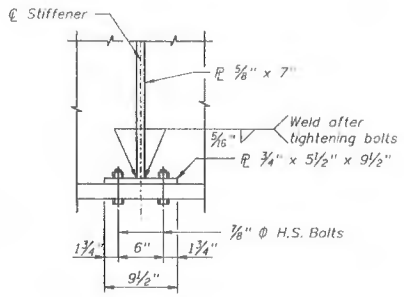

SECTION A-A

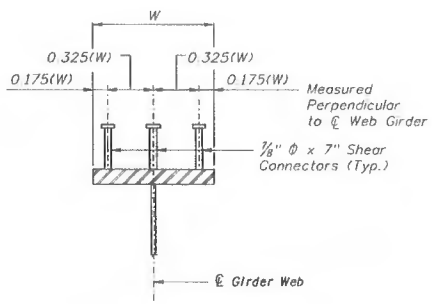

SHEAR CONNECTOR DETAILS

NOTE:
Shear Connectors shall conform to the requirements in the FDOT Standard Specifications, Section 502.

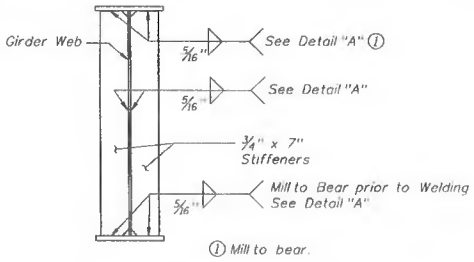

JACKING STIFFENER

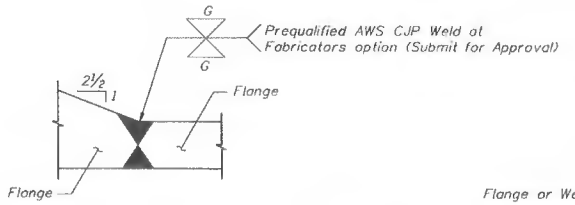

FLANGE BUTT WELD

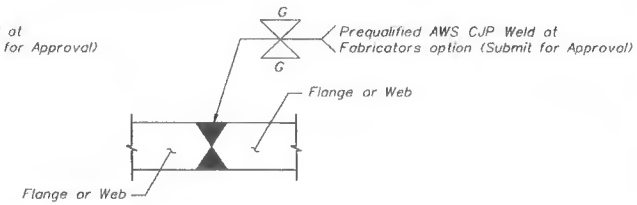

FLANGE OR WEB BUTT WELD

BRIDGE NO. 750743

REVISIONS					
DATE	BY	DESCRIPTION	DATE	BY	DESCRIPTION

	NAMES	DATES
DRAWN BY	CAL/SDM	01-07
CHECKED BY	TED	01-07
DESIGNED BY	HGL	01-07
CHECKED BY	TED	01-07
APPROVED BY	T.E. Davidson P.E.	

ENGINEER OF RECORD:
PARSONS
2499 LAKEMONT AVE., SUITE 450, ORLANDO, FL 32814
PHONE: (407) 702-8800
CERTIFICATE OF AUTHORIZATION NO. 1836
THOMAS E. DAVIDSON, P.E. LIC. NO. 47131

EXPRESSWAY AUTHORITY

ROAD NO.	SR 414
COUNTY	ORANGE
FINANCIAL PROJECT ID	414-211

SHEET TITLE: FRAMING DETAILS

PROJECT NAME: MAITLAND BLVD. EXTENSION
SR 414 OVER SR 500 (US 441)

SHEET NO. B3-27

33259 1/5/2007 4:15:54 PM P:\646262\646262\struct\35R441\b35stiffener01.dgn

PARSONS

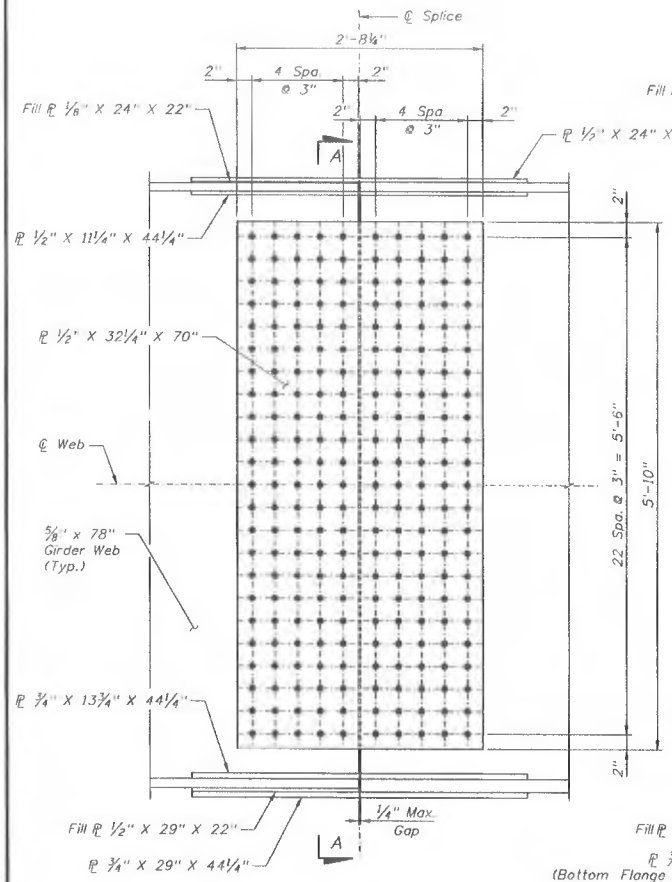

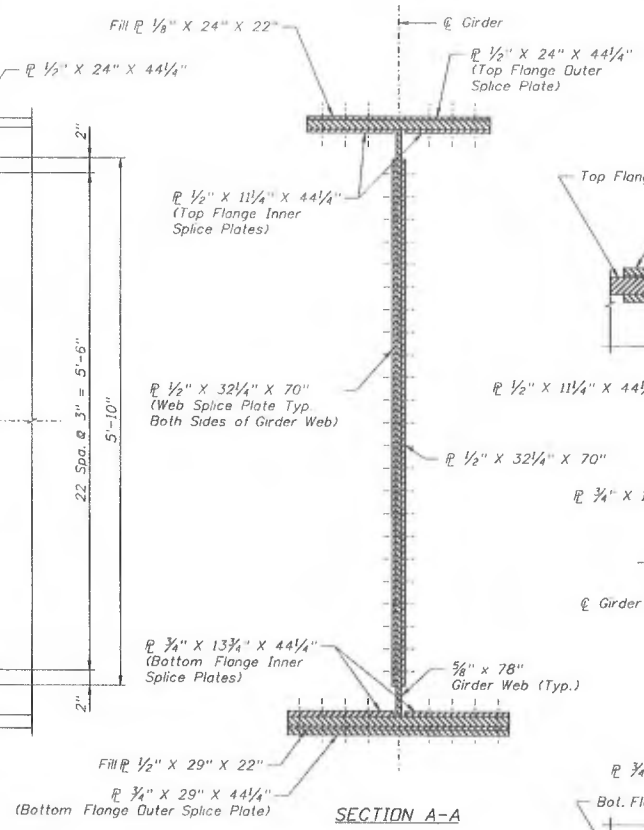

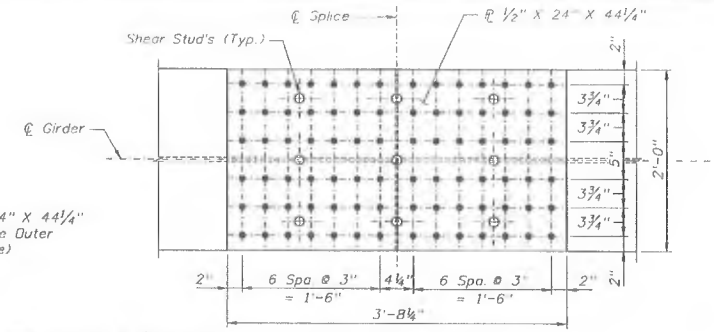

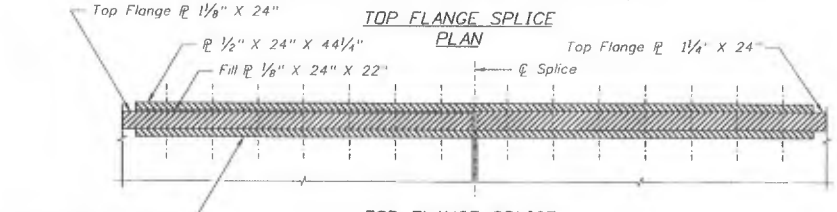

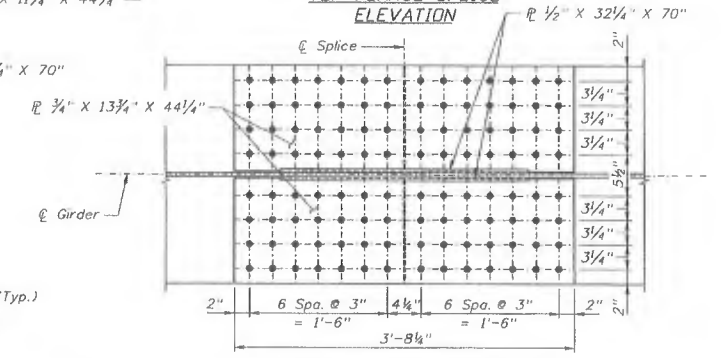

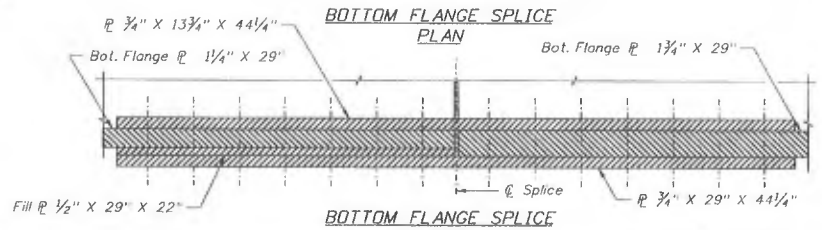

BRIDGE NO. 750743

REVISIONS					
DATE	BY	DESCRIPTION	DATE	BY	DESCRIPTION

	NAMES	DATES
DRAWN BY	SDM/CAL	01-07
CHECKED BY	TED	01-07
DESIGNED BY	HGL	01-07
CHECKED BY	TED	01-07
APPROVED BY	T.E. Davidson P.E.	

ENGINEER OF RECORD:
PARSONS
3430 LAKEMONT AVE., SUITE 400, ORLANDO, FL 32814
PHONE: (407) 702-8800
CERTIFICATE OF AUTHORIZATION NO. 1858
THOMAS E. DAVIDSON, P.E. LIC. NO. 47131

EXPRESSWAY AUTHORITY

ROAD NO.	SR 414
COUNTY	ORANGE
FINANCIAL PROJECT ID	414-211

SHEET TITLE: BOLTED FIELD SPLICE

PROJECT NAME: MAITLAND BLVD. EXTENSION SR 414 OVER SR 500 (US 441)

SHEET NO. B3-28

33259 1/5/2007 4:15:56 PM P:\646262\646262\struct\35\441\B3FieldSpliceOl.dgn

PARSONS

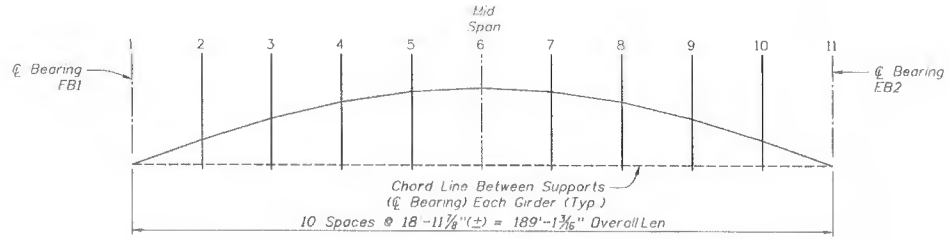

Girder	Item	℄ Bridge EB1					Mid Span					℄ Bridge EB2
		1	2	3	4	5	6	7	8	9	10	11
1	Steel DL	0.000	1.049	1.962	2.671	3.118	3.271	3.118	2.674	1.965	1.052	0.000
	Slab DL	0.000	3.143	5.875	7.989	9.319	9.774	9.318	7.993	5.879	3.151	0.000
	Superimposed DL	0.000	0.166	0.311	0.423	0.493	0.518	0.494	0.424	0.312	0.167	0.000
	Geometric Camber	0.000	0.287	0.512	0.671	0.766	0.797	0.765	0.669	0.509	0.285	0.000
	Total Camber	0.000	4.645	8.660	11.753	13.696	14.360	13.695	11.759	8.665	4.656	0.000
2	Steel DL	0.000	1.042	1.951	2.655	3.098	3.249	3.097	2.653	1.951	1.044	0.000
	Slab DL	0.000	3.147	5.883	7.998	9.332	9.784	9.331	7.998	5.887	3.156	0.000
	Superimposed DL	0.000	0.165	0.309	0.421	0.491	0.515	0.491	0.421	0.309	0.166	0.000
	Geometric Camber	0.000	0.283	0.504	0.660	0.755	0.785	0.753	0.659	0.501	0.282	0.000
	Total Camber	0.000	4.638	8.648	11.734	13.676	14.333	13.672	11.730	8.649	4.648	0.000
3	Steel DL	0.000	1.037	1.943	2.643	3.086	3.235	3.085	2.641	1.943	1.039	0.000
	Slab DL	0.000	3.151	5.899	8.017	9.356	9.808	9.357	8.015	5.903	3.160	0.000
	Superimposed DL	0.000	0.165	0.308	0.419	0.489	0.513	0.489	0.419	0.308	0.165	0.000
	Geometric Camber	0.000	0.280	0.497	0.651	0.745	0.774	0.742	0.650	0.494	0.278	0.000
	Total Camber	0.000	4.632	8.648	11.730	13.676	14.330	13.674	11.724	8.648	4.642	0.000
4	Steel DL	0.000	1.034	1.939	2.635	3.079	3.227	3.079	2.637	1.939	1.035	0.000
	Slab DL	0.000	3.159	5.916	8.034	9.382	9.834	9.384	8.042	5.919	3.162	0.000
	Superimposed DL	0.000	0.164	0.308	0.418	0.488	0.512	0.488	0.419	0.308	0.164	0.000
	Geometric Camber	0.000	0.275	0.488	0.641	0.732	0.762	0.731	0.638	0.486	0.272	0.000
	Total Camber	0.000	4.632	8.651	11.728	13.681	14.335	13.682	11.736	8.652	4.633	0.000
5	Steel DL	0.000	1.035	1.936	2.633	3.075	3.224	3.076	2.636	1.937	1.032	0.000
	Slab DL	0.000	3.174	5.930	8.057	9.402	9.857	9.406	8.066	5.933	3.166	0.000
	Superimposed DL	0.000	0.165	0.308	0.418	0.488	0.512	0.488	0.419	0.308	0.164	0.000
	Geometric Camber	0.000	0.270	0.481	0.632	0.722	0.751	0.720	0.630	0.479	0.269	0.000
	Total Camber	0.000	4.644	8.655	11.740	13.686	14.342	13.690	11.751	8.656	4.631	0.000
6	Steel DL	0.000	1.036	1.936	2.634	3.072	3.223	3.074	2.636	1.936	1.033	0.000
	Slab DL	0.000	3.183	5.940	8.076	9.414	9.873	9.419	8.081	5.942	3.174	0.000
	Superimposed DL	0.000	0.165	0.308	0.418	0.488	0.512	0.488	0.419	0.308	0.164	0.000
	Geometric Camber	0.000	0.267	0.475	0.622	0.711	0.740	0.709	0.620	0.471	0.264	0.000
	Total Camber	0.000	4.652	8.658	11.750	13.685	14.348	13.690	11.754	8.656	4.635	0.000
7	Steel DL	0.000	1.036	1.936	2.635	3.071	3.224	3.073	2.635	1.936	1.036	0.000
	Slab DL	0.000	3.186	5.944	8.084	9.416	9.884	9.423	8.084	5.944	3.186	0.000
	Superimposed DL	0.000	0.165	0.308	0.419	0.488	0.512	0.488	0.419	0.308	0.165	0.000
	Geometric Camber	0.000	0.264	0.467	0.613	0.700	0.728	0.698	0.610	0.464	0.261	0.000
	Total Camber	0.000	4.651	8.655	11.751	13.674	14.348	13.682	11.747	8.651	4.648	0.000

Girder	Item	℄ Bridge EB1					Mid Span					℄ Bridge EB2
		1	2	3	4	5	6	7	8	9	10	11
8	Steel DL	0.000	1.036	1.936	2.636	3.074	3.224	3.073	2.634	1.936	1.036	0.000
	Slab DL	0.000	3.184	5.942	8.080	9.419	9.877	9.415	8.076	5.940	3.183	0.000
	Superimposed DL	0.000	0.165	0.308	0.419	0.488	0.512	0.488	0.418	0.308	0.165	0.000
	Geometric Camber	0.000	0.258	0.460	0.603	0.689	0.717	0.687	0.601	0.457	0.257	0.000
	Total Camber	0.000	4.643	8.645	11.737	13.671	14.330	13.663	11.729	8.640	4.641	0.000
9	Steel DL	0.000	1.033	1.937	2.636	3.076	3.225	3.075	2.633	1.936	1.035	0.000
	Slab DL	0.000	3.168	5.933	8.066	9.406	9.861	9.402	8.057	5.930	3.174	0.000
	Superimposed DL	0.000	0.164	0.308	0.419	0.488	0.512	0.488	0.418	0.308	0.165	0.000
	Geometric Camber	0.000	0.255	0.453	0.594	0.678	0.706	0.677	0.592	0.449	0.253	0.000
	Total Camber	0.000	4.620	8.631	11.715	13.648	14.304	13.641	11.700	8.623	4.627	0.000
10	Steel DL	0.000	1.035	1.939	2.637	3.079	3.228	3.079	2.635	1.939	1.034	0.000
	Slab DL	0.000	3.162	5.919	8.042	9.384	9.835	9.382	8.034	5.916	3.159	0.000
	Superimposed DL	0.000	0.164	0.308	0.419	0.488	0.512	0.488	0.418	0.308	0.164	0.000
	Geometric Camber	0.000	0.251	0.446	0.586	0.667	0.695	0.666	0.582	0.442	0.248	0.000
	Total Camber	0.000	4.612	8.611	11.683	13.619	14.271	13.614	11.670	8.604	4.606	0.000
11	Steel DL	0.000	1.039	1.943	2.641	3.085	3.235	3.086	2.643	1.943	1.036	0.000
	Slab DL	0.000	3.161	5.903	8.015	9.357	9.806	9.356	8.017	5.899	3.148	0.000
	Superimposed DL	0.000	0.165	0.308	0.419	0.489	0.513	0.489	0.419	0.308	0.164	0.000
	Geometric Camber	0.000	0.247	0.439	0.576	0.658	0.685	0.656	0.573	0.435	0.245	0.000
	Total Camber	0.000	4.612	8.593	11.650	13.590	14.238	13.587	11.652	8.586	4.593	0.000
12	Steel DL	0.000	1.044	1.951	2.653	3.097	3.248	3.098	2.655	1.951	1.042	0.000
	Slab DL	0.000	3.156	5.887	7.998	9.331	9.780	9.332	7.998	5.883	3.147	0.000
	Superimposed DL	0.000	0.166	0.309	0.421	0.491	0.514	0.491	0.421	0.309	0.165	0.000
	Geometric Camber	0.000	0.243	0.433	0.568	0.648	0.674	0.647	0.565	0.429	0.240	0.000
	Total Camber	0.000	4.609	8.580	11.640	13.567	14.217	13.567	11.638	8.572	4.595	0.000
13	Steel DL	0.000	1.052	1.965	2.674	3.118	3.270	3.118	2.671	1.962	1.049	0.000
	Slab DL	0.000	3.151	5.879	7.993	9.316	9.770	9.319	7.989	5.875	3.143	0.000
	Superimposed DL	0.000	0.167	0.312	0.424	0.494	0.517	0.493	0.423	0.311	0.166	0.000
	Geometric Camber	0.000	0.239	0.426	0.558	0.637	0.663	0.636	0.556	0.423	0.237	0.000
	Total Camber	0.000	4.609	8.581	11.648	13.565	14.220	13.566	11.638	8.571	4.596	0.000

Note: Camber Information is based on a Grid Analysis which assumes the Cross frames are rigidly connected to the Girders during the one continuous Wet Pour for entire deck.

BRIDGE NO. 750743

REVISIONS

DATE	BY	DESCRIPTION	DATE	BY	DESCRIPTION

	NAMES	DATES
DRAWN BY	MC	01-07
CHECKED BY	HGL	01-07
DESIGNED BY	NJB	01-07
CHECKED BY	TED	01-07
APPROVED BY	T.E. Davidson P.E.	

ENGINEER OF RECORD:
PARSONS
7428 LAKEMONT AVE., SUITE 480, ORLANDO, FL 32814
PHONE (407) 732-8800
CERTIFICATE OF AUTHORIZATION NO. 1838
THOMAS E. DAVIDSON, P.E. LIC. NO. 47131

EXPRESSWAY AUTHORITY

ROAD NO.	SR 414
COUNTY	ORANGE
FINANCIAL PROJECT ID	414-211

SHEET TITLE: CAMBER DIAGRAM

PROJECT NAME: MAITLAND BLVD. EXTENSION
SR 414 OVER SR 500 (US 441)

SHEET NO. B3-29

33259 1/5/2007 4:15:58 PM P:\646262\646262\structl\SR441\B3CAMBER01.DGN

PARSONS

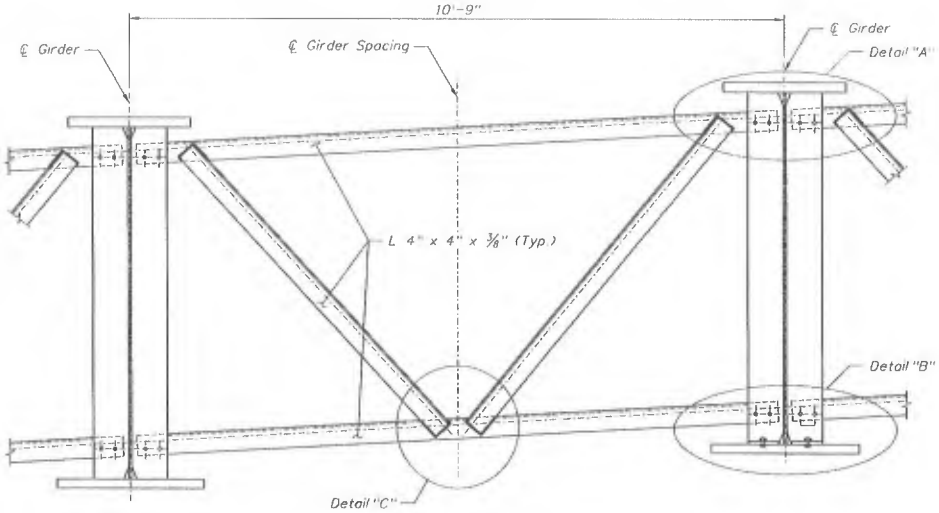

CROSS FRAME CONNECTION

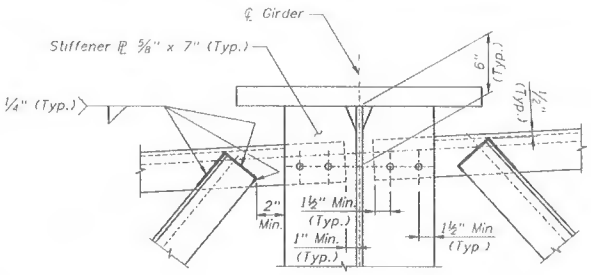

DETAIL "A"

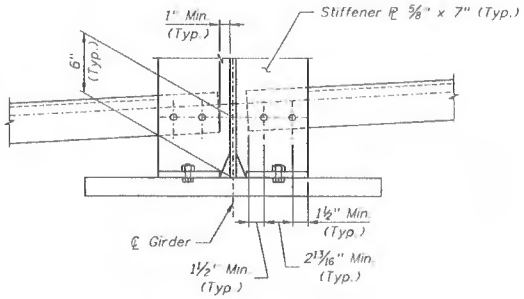

DETAIL "B"

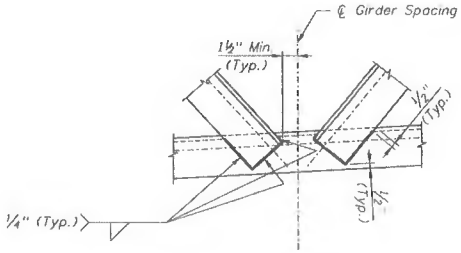

DETAIL "C"

Notes:

1. Refer to Framing Plan and Girder Elevation Sheet for Crossframe spacing.
2. Refer to Framing Detail Sheet for additional connection details.

BRIDGE NO. 750743

REVISIONS

DATE	BY	DESCRIPTION	DATE	BY	DESCRIPTION

	NAMES	DATES
DRAWN BY	SDM	01-07
CHECKED BY	TED	01-07
DESIGNED BY	HGL	01-07
CHECKED BY	TED	01-07
APPROVED BY	T.E. Davidson P.E.	

ENGINEER OF RECORD:
PARSONS
3425 LAKEMONT AVE., SUITE 450, ORLANDO, FL 32814
PHONE: (407) 703-6800
CERTIFICATE OF AUTHORIZATION NO. 1636
THOMAS E. DAVIDSON, P.E. LIC. NO. 47131

EXPRESSWAY AUTHORITY

ROAD NO.	SR 414
COUNTY	ORANGE
FINANCIAL PROJECT ID	414-211

SHEET TITLE: CROSS FRAME DETAILS (1 OF 2)

PROJECT NAME: MAITLAND BLVD. EXTENSION
SR 414 OVER SR 500 (US 441)

SHEET NO. B3-30

33259 1/5/2007 4:5:58 PM P:\646262\646262\structure\SR441\B3CrossFrameDetail.dgn

PARSONS

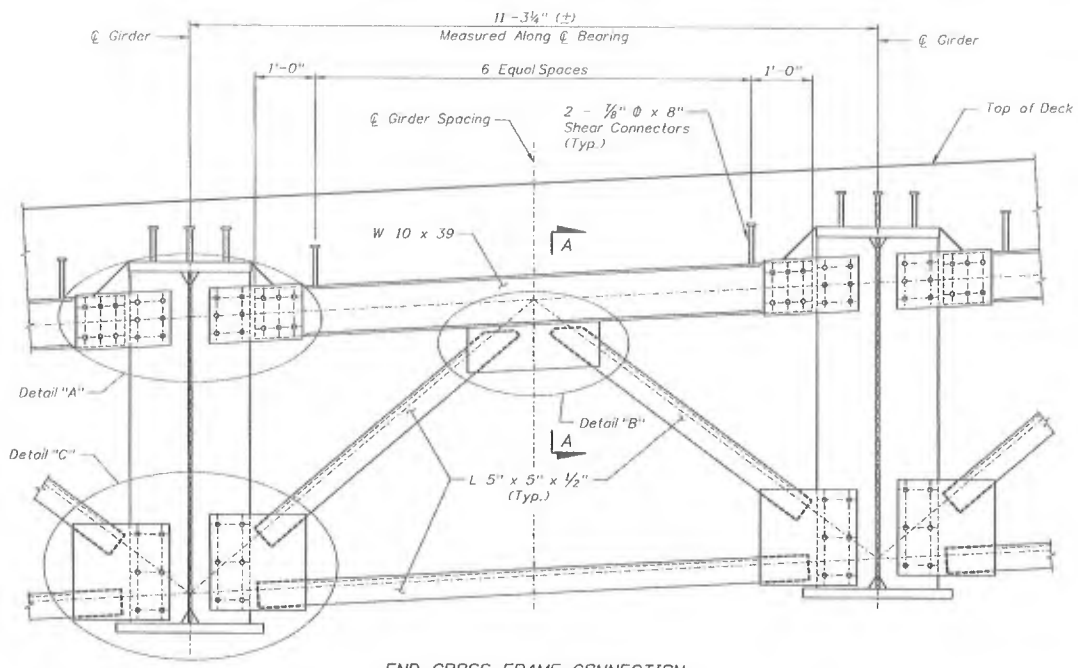

END CROSS FRAME CONNECTION

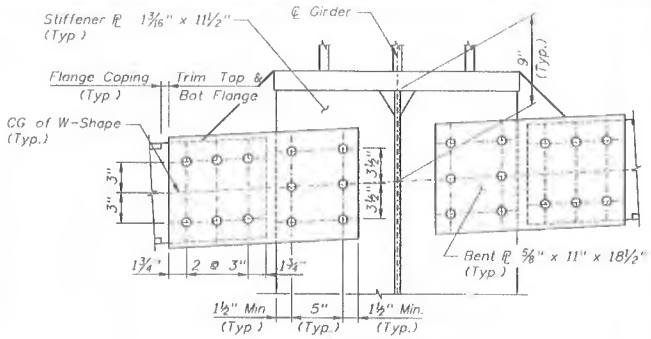

DETAIL "A"

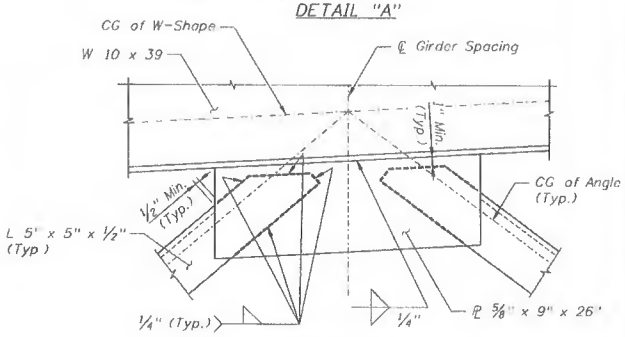

DETAIL "B"

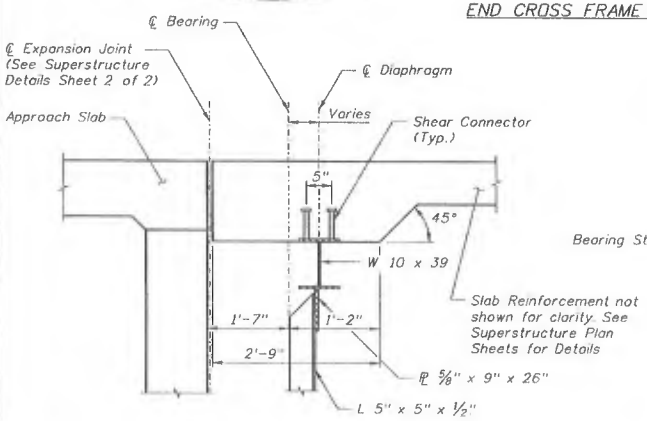

SECTION A-A

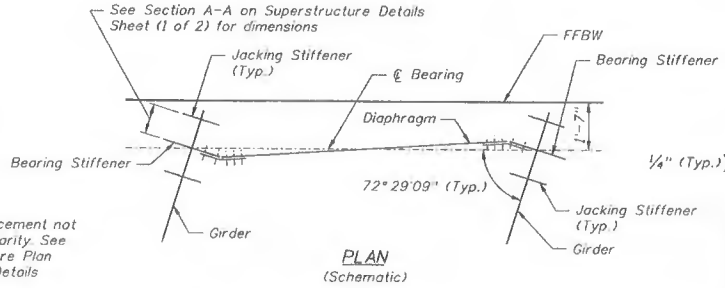

PLAN
(Schematic)

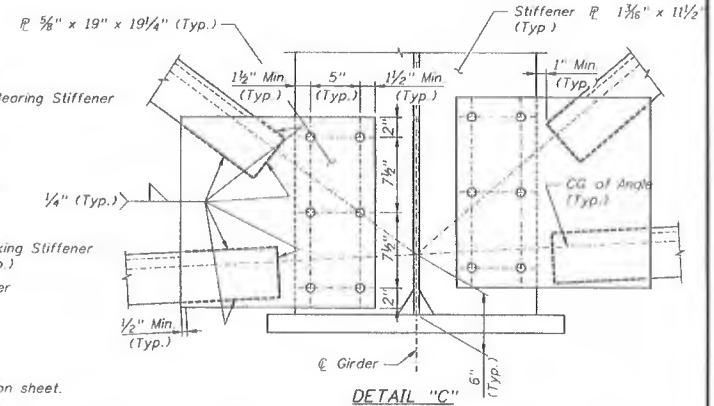

DETAIL "C"

Notes:
1. For General Notes, see Framing Plan and Girder Elevation sheet.
2. For Jacking Loads, see Superstructure Section sheets.

BRIDGE NO. 750743

REVISIONS					
DATE	BY	DESCRIPTION	DATE	BY	DESCRIPTION

	NAMES	DATES
DRAWN BY	SDM	01-07
CHECKED BY	TED	01-07
DESIGNED BY	HGL	01-07
CHECKED BY	TED	01-07
APPROVED BY	T.E. Davidson P.E.	

ENGINEER OF RECORD:
PARSONS
3400 LAKEMONT AVE., SUITE 430, ORLANDO, FL 32814
PHONE: (407) 702-8800
CERTIFICATE OF AUTHORIZATION NO. 1838
THOMAS E. DAVIDSON, P.E. LIC. NO. 47151

EXPRESSWAY AUTHORITY

ROAD NO.	SR 414
COUNTY	ORANGE
FINANCIAL PROJECT ID	414-211

SHEET TITLE: CROSS FRAME DETAILS (2 OF 2)

PROJECT NAME: MAITLAND BLVD. EXTENSION
SR 414 OVER SR 500 (US 441)

SHEET NO. B3-31

33259 1/5/2007 435159 PW P:\646262\646262\struct\35\441\b3CrossFrameDet02.dgn

PARSONS

FLORIDA DEPARTMENT OF TRANSPORTATION
BRIDGE MANAGEMENT SYSTEM
Inspection/CIDR/Bridge Profile Report
Inspection

Structure ID: 770074

DISTRICT: D5 - Deland **INSPECTION DATE: 4/1/2019 BOEQ**

BY:	CONSOR Engineers, LLC	STRUCTURE NAME:	SR-414 over Lake Bosse
OWNER:	1 State Highway Agency	YEAR BUILT:	2000
MAINTAINED BY:	1 State Highway Agency	SECTION NO.:	77 002 000
STRUCTURE TYPE:	3 Steel - 02 Stringer/Girder	MP:	37.400
LOCATION:	SR-414 over Lake Bosse	ROUTE:	00414
SERV. TYPE ON:	5 Highway-pedestrian	FACILITY CARRIED:	SR-414
SERV. TYPE UNDER:	5 Waterway	FEATURE INTERSECTED:	Lake Bosse

☐ FUNCTIONALLY OBSOLETE ☐ STRUCTURALLY DEFICIENT

TYPE OF INSPECTION: Regular NBI

DATE FIELD INSPECTION WAS PERFORMED: ABOVE WATER: 4/1/2019 UNDERWATER: N/A

SUFFICIENCY RATING: 92.7
HEALTH INDEX: 95.11

This report contains information relating to the physical security of a structure and depictions of the structure. This information is confidential and exempt from public inspection pursuant to sections 119.071(3)(a) and 119.071(3)(b), Florida Statutes. Only the cover page of this report may be inspected and copied.

FLORIDA DEPARTMENT OF TRANSPORTATION
BRIDGE MANAGEMENT SYSTEM
Inspection/CIDR/Bridge Profile Report
Inspection

Structure ID: 770074

DISTRICT: D5 - Deland **INSPECTION DATE: 4/1/2019 BOEQ**

BY:	CONSOR Engineers, LLC	STRUCTURE NAME:	SR-414 over Lake Bosse
OWNER:	1 State Highway Agency	YEAR BUILT:	2000
MAINTAINED BY:	1 State Highway Agency	SECTION NO.:	77 002 000
STRUCTURE TYPE:	3 Steel - 02 Stringer/Girder	MP:	37.400
LOCATION:	SR-414 over Lake Bosse	ROUTE:	00414
SERV. TYPE ON:	5 Highway-pedestrian	FACILITY CARRIED:	SR-414
SERV. TYPE UNDER:	5 Waterway	FEATURE INTERSECTED:	Lake Bosse

☐ THIS BRIDGE CONTAINS FRACTURE CRITICAL COMPONENTS

☐ THIS BRIDGE IS SCOUR CRITICAL

☐ THIS REPORT IDENTIFIES DEFICIENCIES WHICH REQUIRE PROMPT CORRECTIVE ACTION

☐ FUNCTIONALLY OBSOLETE ☐ STRUCTURALLY DEFICIENT

TYPE OF INSPECTION: Regular NBI

DATE FIELD INSPECTION WAS PERFORMED: ABOVE WATER: 4/1/2019 UNDERWATER: N/A

OVERALL NBI RATINGS:

DECK:	7 Good	CHANNEL:	7 Minor Damage
SUPERSTRUCTURE:	7 Good	CULVERT:	N N/A (NBI)
SUBSTRUCTURE:	7 Good	SUFF. RATING:	92.7
PERF. RATING:	Good	HEALTH INDEX:	95.11

FIELD PERSONNEL / TITLE / NUMBER:	**INITIALS**
Gehry, Bill - Bridge Inspector (CBI #00574) (lead)	BG
Geden, Daniel - Assistant Bridge Inspector	
Olree, Jeff - Assistant Bridge Inspector	
Hitchens, Joe - Assistant Bridge Inspector	

REVIEWING BRIDGE INSPECTION SUPERVISOR:

Akers, Matt - Bridge Inspector (CBI#00386) MA

CONFIRMING REGISTERED PROFESSIONAL ENGINEER:

Maurer, Mary Ellen - Professional Engineer (#44737) CONSOR Engineers, LLC.
2121 Old Hickory Tree Road
Certificate of Authorization #6876
Saint Cloud FL 34772

This item has been digitally signed and sealed by:

SIGNATURE: Mary Ellen E Maurer Digitally signed by Mary Ellen E Maurer DN: CN=Mary Ellen E Maurer, OU=A01427D0000016A1200AEA70000035A, O=INFRASTRUCTURE ENGINEERS, C=US Date: 2019.05.15 16:11:43-04'00'

DATE:

on the date adjacent to the seal. Printed copies of this document are not considered signed and sealed and the signature must be verified on any electronic copies.

MARY ELLEN MAURER LICENSE No 44737 STATE OF FLORIDA PROFESSIONAL ENGINEER

This report contains information relating to the physical security of a structure and depictions of the structure. This information is confidential and exempt from public inspection pursuant to sections 119.071(3)(a) and 119.071(3)(b), Florida Statutes. Only the cover page of this report may be inspected and copied.

The official record of this document is the electronic file digitally signed and sealed under Rule 61G15-23.004, F.A.C.

FLORIDA DEPARTMENT OF TRANSPORTATION
BRIDGE MANAGEMENT SYSTEM
Inspection/CIDR/Bridge Profile Report
Inspection

Structure ID: 770074

DISTRICT: D5 - Deland **INSPECTION DATE: 4/1/2019 BOEQ**

All Elements

DECKS : Decks/Slabs

Str Unit	Elem/Env	Description	Qty1	%1	Qty2	%2	Qty3	%3	Qty4	%4	T Qty
0	12 / 2	Re Concrete Deck	90558	100	0	.	0	.	0	.	90558 sq.ft

Element Inspection Notes:

12/2 Note: The deck underside is not visible due to the use of steel stay in-place forms. There is a large utility line attached to the underside of the deck overhang and the beam web areas on the north side of the bridge.

Previously Reported
CS-1: There are lateral and longitudinal cracks, up to full span length x 1/32in. W, in the deck top over intermediate Bent Caps 2, 5, and 6.

INCIDENTAL: There are lateral and longitudinal cracks, up to 10ft. L x 1/32in. W, in the raised mountable median in all spans. There are scorch marks in the outside shoulder of the eastbound roadway of Span 6 due to a vehicle fire. There are loose and missing nuts and bolts in the following hanger assemblies: Hangers 6-1, 6-3, 6-4, and 6-8. Several of the connection plates attaching the utility to the beam webs appear to be loose. There are several missing roadway reflectors.

CORRECTIVE ACTION EVALUATION:
Install missing or broken roadway reflectors - Not Complete

DECKS : Joints

Str Unit	Elem/Env	Description	Qty1	%1	Qty2	%2	Qty3	%3	Qty4	%4	T Qty
0	300 / 2	Strip Seal Exp Joint	516	100	0	.	0	.	0	.	516 ft

Element Inspection Notes:

300/2 Note: There are strip seal expansion joints at End Bent 1, intermediate Bent 3, intermediate Bent 4 and End Bent 7.

Previously Reported
CS-1: All of the expansion joints have a moderate amount of loose sand and debris in the shoulder areas, sidewalks and median.

Note: The joint widths were measured at a temperature of 65-degrees.
End Bent 1 = 2-1/2in.
Bent 3 = 2-1/2in.
Bent 4 = 2-1/2in.
End Bent 7 = 2-1/2in.

Noted This Inspection
There were no new deficiencies found.

MISCELLANEOUS : Channel

Str Unit	Elem/Env	Description	Qty1	%1	Qty2	%2	Qty3	%3	Qty4	%4	T Qty
0	8290 / 2	Channel	0	.	1	100	0	.	0	.	1 (EA)
0	9130 / 2	Aggradation	0	.	1	100	0	.	0	.	1 (EA)

Element Inspection Notes:

8290/2 Note: There are four pipe casings extending out from the ground in Span 3 midspan. The water depth was 1.8ft. Refer to the Channel Profile and Waterway Measurements on Pages 33 through 35.

This report contains information relating to the physical security of a structure and depictions of the structure. This information is confidential and exempt from public inspection pursuant to sections 119.071(3)(a) and 119.071(3)(b), Florida Statutes. Only the cover page of this report may be inspected and copied.

FLORIDA DEPARTMENT OF TRANSPORTATION
BRIDGE MANAGEMENT SYSTEM
Inspection/CIDR/Bridge Profile Report
Inspection

Structure ID: 770074

DISTRICT: D5 - Deland **INSPECTION DATE: 4/1/2019 BOEQ**

Previously Reported
CS-2: (9130-1EA) There is a muck island that is approximately 70ft. long and extends the full width of the bridge below Span 3.

(NO QTY) There is heavy vegetation growth on both the upstream and downstream sides of the bridge.

(NO QTY) There is random construction debris adjacent to the intermediate bents.

9130/2 Refer to Parent Element

MISCELLANEOUS : Other Elements

Str Unit	Elem/Env	Description	Qty1	%1	Qty2	%2	Qty3	%3	Qty4	%4	T Qty
0	321 / 2	Re Conc Approach Slab	4576	93.35	323	6.59	3	0.06	0	.	4902 sq.ft
0	1080 / 2	Delamination/Spall/Patched Area	0	.	3	50	3	50	0	.	6 sq.ft
0	1130 / 2	Cracking (RC and Other)	0	.	320	100	0	.	0	.	320 sq.ft

Element Inspection Notes:

321/2 Note: Both east and west approach slabs are bare concrete.

Previously Reported
CS-3: (1080-2SF) There is a spall, 1ft. 6in. L x 3in. W x 1in. D, in the overhang of the east approach slab at the northeast end of the bridge adjacent to the End Bent 7 expansion joint. See Photo 1.

CS-2: (1080-1SF) There is an in-place spall, 1ft. L x 4in. W, in the approach slab sidewalk at the southwest end of the bridge adjacent to the End Bent 1 expansion joint.

(1080-1SF) The northwest overhang at End Bent 1 in the underside has a delamination, 9in. L x 1ft W with associated diagonal cracks, up to 1/32in. wide with efflorescence.

(1130-320SF) Both approach slabs have longitudinal cracks, up to full approach slab length x 1/16in. W (INCREASE).

INCIDENTAL: The approach roadway has minor cracks and settlement up to 1in. on both ends of the bridge at the approach roadway transitions to the approach slabs.

Noted This Inspection
CS-3: (1080-1SF) The west approach slab has a spall, 6in. L x 5in. W x 3/4in. D, in Lane 3 left wheel path adjacent to the expansion joint. See Photo 2.

CS-2: (1080-1SF) The east approach slab has a delamination, 1ft. x 1ft. 10in. W, in the north sidewalk adjacent to End Bent 7 expansion.

INCIDENTAL: The west approach median has a spall, 6in. L x 7in. W x 5in. D, at the northeast corner of the median adjacent to the expansion joint. The approach medians have cracks, up to 3ft. L x 1/32in. W, mostly emanating from the expansion joints.

The east approach roadway barrier wall has a spall, 1ft. 10in. H x 6in. W x 3in. D, with exposed steel with 10% section loss at the southeast corner adjacent to the approach roadway transition. The west approach roadway barrier wall has a spall, 6in. H x 5in. W x 1in. D, on the north wall at the approach roadway transition on the south face.

CORRECTIVE ACTION EVALUATION:
Repair the delamination with associated cracks at the northwest overhang at Abutment 1 -

This report contains information relating to the physical security of a structure and depictions of the structure. This information is confidential and exempt from public inspection pursuant to sections 119.071(3)(a) and 119.071(3)(b), Florida Statutes. Only the cover page of this report may be inspected and copied.

FLORIDA DEPARTMENT OF TRANSPORTATION
BRIDGE MANAGEMENT SYSTEM
Inspection/CIDR/Bridge Profile Report
Inspection

Structure ID: 770074

DISTRICT: D5 - Deland **INSPECTION DATE: 4/1/2019 BOEQ**

Not Complete

1080/2 Refer to Parent Element

1130/2 Refer to Parent Element

MISCELLANEOUS : Other Elements

Str Unit	Elem/Env	Description	Qty1	%1	Qty2	%2	Qty3	%3	Qty4	%4	T Qty
0	8475 / 2	R/Conc Walls	76	95	1	1.25	3	3.75	0	.	80 ft
0	1080 / 2	Delamination/Spall/Patched Area	0	.	1	25	3	75	0	.	4 ft

Element Inspection Notes:

8475/2 Previously Reported
CS-3: (1080-2FT) There are spalls in the approach barrier walls at the approach roadway/approach slab transition as follows:
-northeast end, outside face 2ft. H x 6in. W x 1in. D
-northeast end, inside face 2ft. 10in. H x 8in. W x 1-1/2in. D, with exposed steel; painted by the inspector (INCREASE) See Photo 3
-southeast end, outside face 2ft. 10in. H x 5in. W x 2in. D (INCREASE) See Photo 4

CS-2: (1080-1FT) There is an in-place spall, 1ft. H x 4in. W, in the inside face of the approach barrier wall at the northwest end at the approach roadway/approach slab transition.

Noted This Inspection
CS-3: (1080-1FT) The north barrier wall has a delamination/spall, 6in. H x 8in. W x 1/2in. D, 4ft. from the west end. See Photo 5.

1080/2 Refer to Parent Element

MISCELLANEOUS : Other Elements

Str Unit	Elem/Env	Description	Qty1	%1	Qty2	%2	Qty3	%3	Qty4	%4	T Qty
0	8478 / 2	MSE Walls	1200	100	0	.	0	.	0	.	1200 ft

Element Inspection Notes:

8478/2 Note: There are MSE walls on the southeast and southwest ends of the bridge.

Previously Reported
INCIDENTAL: The southwest MSE wall is covered in moderate to heavy vegetation.

Noted This Inspection
There were no new deficiencies found.

SUBSTRUCTURE : Substructure

Str Unit	Elem/Env	Description	Qty1	%1	Qty2	%2	Qty3	%3	Qty4	%4	T Qty
0	215 / 2	Re Conc Abutment	239	92.28	18	6.95	2	0.77	0	.	259 ft
0	1080 / 2	Delamination/Spall/Patched Area	0	.	0	.	2	100	0	.	2 ft
0	1120 / 2	Efflorescence/Rust Staining	0	.	16	100	0	.	0	.	16 ft
0	1130 / 2	Cracking (RC and Other)	0	.	2	100	0	.	0	.	2 ft

Element Inspection Notes:

215/2 Previously Reported
CS-3: (1080-2FT) There is a spall, 2ft. L x 2ft. W x 4in. D, in the cheekwall at the

This report contains information relating to the physical security of a structure and depictions of the structure. This information is confidential and exempt from public inspection pursuant to sections 119.071(3)(a) and 119.071(3)(b), Florida Statutes. Only the cover page of this report may be inspected and copied.

FLORIDA DEPARTMENT OF TRANSPORTATION
BRIDGE MANAGEMENT SYSTEM
Inspection/CIDR/Bridge Profile Report
Inspection

Structure ID: 770074

DISTRICT: D5 - Deland **INSPECTION DATE: 4/1/2019 BOEQ**

southwest end of the bridge. See Photo 6.

CS-2: (1120-16FT) There are vertical cracks, up to full height of the caps x 1/64in. W, with efflorescence in both end bent caps.

(1130-2FT) The southeast cheekwall on the south face has a diagonal crack 1ft. 6in. L x 1/16in. W.

INCIDENTAL: There is graffiti on both end bent caps. End Bent 7 has an area of undermining under Beams 6-3 and 6-4, 9in. H x 3ft. W x 9in. D.

Noted This Inspection
There were no new deficiencies found.

1080/2 Refer to Parent Element

1120/2 Refer to Parent Element

1130/2 Refer to Parent Element

SUBSTRUCTURE : Substructure

Str Unit	Elem/Env	Description	Qty1	%1	Qty2	%2	Qty3	%3	Qty4	%4	T Qty
0	225 / 2	Steel Pile	0	.	124	100	0	.	0	.	124 (EA)
0	1000 / 2	Corrosion	0	.	124	100	0	.	0	.	124 (EA)
0	8516 / 2	Painted Steel	7012	66.67	0	.	3506	33.33	0	.	10518 sq.ft
0	3440 / 2	Eff (Stl Protect Coat)	0	.	0	.	3506	100	0	.	3506 sq.ft

Element Inspection Notes:

225/2 Note: The piles are constructed of painted steel pipe piles filled with concrete. There is a steel cable attached to Pile 5-20; approximately 1ft. below the pile cap and appears to have been used during construction.

Previously Reported
CS-3: (1000-124EA) There is slight surface corrosion, flaking and pitting up to 1/32in. D x 3ft. H, on the steel pipe piles at the waterline area. See Photo 7.

Noted This Inspection
There were no new deficiencies found.

1000/2 Refer to Parent Element

8516/2 Previously Reported
CS-3: (3440-3506SF) There are areas of paint failure allowing slight surface corrosion, flaking and pitting up to 1/32in. D x 3ft. H, on the steel pipe piles at the waterline area. See Photo 7.

Noted This Inspection
There were no new deficiencies found.

3440/2 Refer to Parent Element

SUBSTRUCTURE : Substructure

Str Unit	Elem/Env	Description	Qty1	%1	Qty2	%2	Qty3	%3	Qty4	%4	T Qty
0	234 / 2	Re Conc Pier Cap	598	96.45	22	3.55	0	.	0	.	620 ft
0	1090 / 2	Exposed Rebar	0	.	22	100	0	.	0	.	22 ft

This report contains information relating to the physical security of a structure and depictions of the structure. This information is confidential and exempt from public inspection pursuant to sections 119.071(3)(a) and 119.071(3)(b), Florida Statutes. Only the cover page of this report may be inspected and copied.

FLORIDA DEPARTMENT OF TRANSPORTATION
BRIDGE MANAGEMENT SYSTEM
Inspection/CIDR/Bridge Profile Report
Inspection

Structure ID: 770074

DISTRICT: D5 - Deland **INSPECTION DATE: 4/1/2019 BOEQ**

Element Inspection Notes:

234/2 Previously Reported
CS-2: (1090-17FT) There are minor pop-outs, 2in. H x 1in. W x 1in. D, with exposed steel at random locations throughout the intermediate bent caps.

(1090-5FT) There are several exposed dowel rods extending from the face of the bent caps that are up to 1ft. long; located one in the east face of Bent Cap 5 and four in the east face of Bent Cap 6.

CS-1: There are vertical cracks, up to full cap height x 1/64in. W, in all intermediate pier caps.

Noted This Inspection
There were no new deficiencies found.

1090/2 Refer to Parent Element

SUBSTRUCTURE : Substructure

Str Unit	Elem/Env	Description	Qty1	%1	Qty2	%2	Qty3	%3	Qty4	%4	T Qty
0	8396 / 2	Other Abutment Slope Protection	6114	100	0	.	0	.	0	.	6114 (SF)

Element Inspection Notes:

8396/2 Note: The slope is constructed of rubble riprap and sand cement riprap bags used to repair areas adjacent to the northeast wingwall and approach sidewalk.

Previously Reported
INCIDENTAL: There is a heavy amount of vegetation growth at all four corners of the slope protection.

Noted This Inspection
There were no new deficiencies found.

SUPERSTRUCTURE : Bearings

Str Unit	Elem/Env	Description	Qty1	%1	Qty2	%2	Qty3	%3	Qty4	%4	T Qty
0	310 / 2	Elastomeric Bearing	132	100	0	.	0	.	0	.	132 each

Element Inspection Notes:

310/2 Previously Reported
There were no significant deficiencies found.

Noted This Inspection
There were no new deficiencies found.

SUPERSTRUCTURE : Superstructure

Str Unit	Elem/Env	Description	Qty1	%1	Qty2	%2	Qty3	%3	Qty4	%4	T Qty
0	107 / 2	Steel Opn Girder/Beam	2310	100	0	.	0	.	0	.	2310 ft
0	8517 / 2	Weathering Steel	23100	100	0	.	0	.	0	.	23100 sq.ft

Element Inspection Notes:

107/2 Note: The steel beams located in Span 3 are weathering steel. There is a utility attached to the web area of Beam 3-1 on the north side of the bridge. There are timber boards between the beams in Bay 3-6 midspan.

This report contains information relating to the physical security of a structure and depictions of the structure. This information is confidential and exempt from public inspection pursuant to sections 119.071(3)(a) and 119.071(3)(b), Florida Statutes. Only the cover page of this report may be inspected and copied.

FLORIDA DEPARTMENT OF TRANSPORTATION
BRIDGE MANAGEMENT SYSTEM
Inspection/CIDR/Bridge Profile Report
Inspection

Structure ID: 770074

DISTRICT: D5 - Deland **INSPECTION DATE: 4/1/2019 BOEQ**

Previously Reported
There were no significant deficiencies found.

Noted This Inspection
There were no new deficiencies found.

8517/2 Previously Reported
There were no significant deficiencies found.

Noted This Inspection
There were no new deficiencies found.

SUPERSTRUCTURE : Superstructure

Str Unit	Elem/Env	Description	Qty1	%1	Qty2	%2	Qty3	%3	Qty4	%4	T Qty
0	109 / 2	Pre Opn Conc Girder/Beam	5377	99.76	0	.	13	0.24	0	.	5390 ft
0	1080 / 2	Delamination/Spall/Patched Area	0	.	0	.	13	100	0	.	13 ft

Element Inspection Notes:

109/2 Note: There is a utility attached to the web areas of the exterior beams on the north side of the bridge.

Previously Reported
CS-3: (1080-2FT) Beam 1-2 has a spall, 8in. L x 1ft. 3in. W x 2in. D, in the lower flange north face over End Bent 1.

(1080-4FT) Beam 1-8 has a spall, 3ft. 2in. L x 9in. W x 5in. D, in the top flange north side over End Bent 1. See Photo 8.

(1080-2FT) Beam 1-11 has a spall, 1ft. 6in. L x 8in. W x 2in. D, in the lower flange north face over End Bent 1.

(1080-4FT) Beam 6-11 has a spall, 3ft. 4in. L x 8in. W x 3in. D, in the south face over End Bent 7 (INCREASE). See Photo 9.

INCIDENTAL: There are dowel holes in the end diaphragms over intermediate Bent 2 in Span 2. There are 1in. diameter holes in the web areas of several beams in Spans 2, 5, and 6 adjacent to the end diaphragms. There is graffiti on several of the beams over End Bents 1 and 7 and on the end diaphragms over End Bent 1.

Noted This Inspection
CS-3: (1080-1FT) Beam 1-4 has a spall, 1ft. L x 4in. W x 1/2in. D, on the lower south flange 12ft. from End Bent 1. See Photo 10.

1080/2 Refer to Parent Element

SUPERSTRUCTURE : Superstructure

Str Unit	Elem/Env	Description	Qty1	%1	Qty2	%2	Qty3	%3	Qty4	%4	T Qty
0	331 / 2	Re Conc Bridge Railing	1272	88.33	165	11.46	3	0.21	0	.	1440 ft
0	1080 / 2	Delamination/Spall/Patched Area	0	.	2	40	3	60	0	.	5 ft
0	1090 / 2	Exposed Rebar	0	.	1	100	0	.	0	.	1 ft
0	1120 / 2	Efflorescence/Rust Staining	0	.	162	100	0	.	0	.	162 ft

Element Inspection Notes:

331/2 Previously Reported

This report contains information relating to the physical security of a structure and depictions of the structure. This information is confidential and exempt from public inspection pursuant to sections 119.071(3)(a) and 119.071(3)(b), Florida Statutes. Only the cover page of this report may be inspected and copied.

FLORIDA DEPARTMENT OF TRANSPORTATION
BRIDGE MANAGEMENT SYSTEM
Inspection/CIDR/Bridge Profile Report
Inspection

Structure ID: 770074

DISTRICT: D5 - Deland **INSPECTION DATE: 4/1/2019 BOEQ**

CS-3: (1080-3FT) The south barrier wall at Span 6 midspan has a spall, 3in. H x 2ft. 7in. L x 1/2in. D, on the north face. See Photo 11.

CS-2: (1120-162FT) Both barrier walls have vertical cracks, up to full barrier wall height x 1/32in. W, with efflorescence randomly throughout.

(1080-2FT) There is a patched area, 1ft. 3in. L x 4in. W, on the inside of the north barrier wall adjacent to the approach barrier wall at End Bent 7.

INCIDENTAL: The Class 5 finish is beginning to peel off the barrier walls at random locations.

Noted This Inspection
CS-2: (1090-1FT) There is a piece of exposed steel 3in. long on the top of the south barrier wall in Span 1 above Bent Cap 2; previously painted with no section loss noted.

1080/2 Refer to Parent Element

1090/2 Refer to Parent Element

1120/2 Refer to Parent Element

SUPERSTRUCTURE : Superstructure

Str Unit	Elem/Env	Description	Qty1	%1	Qty2	%2	Qty3	%3	Qty4	%4	T Qty
0	333 / 2	Other Bridge Railing	1367	94.93	64	4.44	9	0.63	0	.	1440 ft
0	1080 / 2	Delamination/Spall/Patched Area	0	.	2	18.18	9	81.82	0	.	11 ft
0	1120 / 2	Efflorescence/Rust Staining	0	.	62	100	0	.	0	.	62 ft

Element Inspection Notes:

333/2 Note: Both sides of the the bridge has sidewalks with concrete parapet walls with aluminum handrail on top.

Previously Reported
CS-3: (1080-2FT) There is a delaminated patch, 2ft. L x 1ft. W, on the inside of the south barrier wall located over End Bent 1. See Photo 12.

(1080-2FT) There are delaminated patches, up to 1ft. 6in. L x 1ft. W, on the north barrier wall located over intermediate Bent 3 in Spans 2 and 3 (INCREASE).

(NO QTY) There is a spall, 8in. L x 3in. W x 2in. D, on the inside face of the barrier wall at the northeast end of the bridge adjacent to End Bent 7 expansion joint.

(1080-2FT) There is a spall, 1ft. 2in. L x 5in. W x 3in. D, on the outside face of the parapet wall at the northeast end of the bridge adjacent to End Bent 7. See Photo 13.

CS-2: (1080-2FT) There is a patched area, 1ft. 6in. L x 10in. W, at the inside of the north barrier located over End Bent 1.

(1120-62FT) Both barrier walls have vertical cracks, up to 1/64in. wide, with efflorescence randomly throughout.

Noted This Inspection
CS-3: (1080-2FT) There are two spalls, up to 1ft. 5in. H x 8in. W x 2in. D, on the outside face of the south barrier wall over Bent Cap 3. See Photo 14.

(1080-1FT) The south barrier wall has a spall, 7in. H x 2in. W x 1in. D, on the inside face at End Bent 7 expansion joint.

This report contains information relating to the physical security of a structure and depictions of the structure. This information is confidential and exempt from public inspection pursuant to sections 119.071(3)(a) and 119.071(3)(b), Florida Statutes. Only the cover page of this report may be inspected and copied.

FLORIDA DEPARTMENT OF TRANSPORTATION
BRIDGE MANAGEMENT SYSTEM
Inspection/CIDR/Bridge Profile Report
Inspection

Structure ID: 770074

DISTRICT: D5 - Deland **INSPECTION DATE: 4/1/2019 BOEQ**

1080/2	Refer to Parent Element
1120/2	Refer to Parent Element

Total Number of Elements*: 15
*excluding defects/protective systems

Structure Notes

Bridge #750743 is to the West and Bridge #770075 is to the East of this Bridge #770074.

This structure was inventoried from west to east.

On 04-15-15, S. McCartney found the load rating for #770074 complete and applicable.

This structure currently does not require weight restriction posting, as per the results of the most recent load analysis dated 12/14/00. Our inspection did not reveal significant deterioration or addition loads to suggest the need for a new load rating analysis.

INSPECTION NOTES: BOEQ 4/1/2019

Sufficiency Rating Calculation Accepted by knieivd at 5/15/2019 2:28:54 PM

This report contains information relating to the physical security of a structure and depictions of the structure. This information is confidential and exempt from public inspection pursuant to sections 119.071(3)(a) and 119.071(3)(b), Florida Statutes. Only the cover page of this report may be inspected and copied.

FLORIDA DEPARTMENT OF TRANSPORTATION
BRIDGE MANAGEMENT SYSTEM
Inspection/CIDR/Bridge Profile Report
Inspection

Structure ID: 770074

DISTRICT: D5 - Deland **INSPECTION DATE: 4/1/2019 BOEQ**

Bridge No. 770074 - North Elevation

This report contains information relating to the physical security of a structure and depictions of the structure. This information is confidential and exempt from public inspection pursuant to sections 119.071(3)(a) and 119.071(3)(b), Florida Statutes. Only the cover page of this report may be inspected and copied.

FLORIDA DEPARTMENT OF TRANSPORTATION
BRIDGE MANAGEMENT SYSTEM
Inspection/CIDR/Bridge Profile Report
Inspection

Structure ID: 770074

DISTRICT: D5 - Deland **INSPECTION DATE: 4/1/2019 BOEQ**

Element 321 - Re Conc Approach Slab

Photo 1: Spall in East Approach Slab Overhang

This report contains information relating to the physical security of a structure and depictions of the structure. This information is confidential and exempt from public inspection pursuant to sections 119.071(3)(a) and 119.071(3)(b), Florida Statutes. Only the cover page of this report may be inspected and copied.

FLORIDA DEPARTMENT OF TRANSPORTATION
BRIDGE MANAGEMENT SYSTEM
Inspection/CIDR/Bridge Profile Report
Inspection

Structure ID: 770074

DISTRICT: D5 - Deland **INSPECTION DATE: 4/1/2019 BOEQ**

Element 321 - Re Conc Approach Slab

Photo 2: Spall in the West Approach Slab, Lane 3

This report contains information relating to the physical security of a structure and depictions of the structure. This information is confidential and exempt from public inspection pursuant to sections 119.071(3)(a) and 119.071(3)(b), Florida Statutes. Only the cover page of this report may be inspected and copied.

FLORIDA DEPARTMENT OF TRANSPORTATION
BRIDGE MANAGEMENT SYSTEM
Inspection/CIDR/Bridge Profile Report
Inspection

Structure ID: 770074

DISTRICT: D5 - Deland **INSPECTION DATE: 4/1/2019 BOEQ**

Element 8475 - R/Conc Walls

Photo 3: Typical Spall in Approach Barrier Wall, Northeast End, inside face shown

This report contains information relating to the physical security of a structure and depictions of the structure. This information is confidential and exempt from public inspection pursuant to sections 119.071(3)(a) and 119.071(3)(b), Florida Statutes. Only the cover page of this report may be inspected and copied.

FLORIDA DEPARTMENT OF TRANSPORTATION
BRIDGE MANAGEMENT SYSTEM
Inspection/CIDR/Bridge Profile Report
Inspection

Structure ID: 770074

DISTRICT: D5 - Deland **INSPECTION DATE: 4/1/2019 BOEQ**

Element 8475 - R/Conc Walls

Photo 4: Typical Spall in Approach Barrier Wall, Southeast End, inside face shown

This report contains information relating to the physical security of a structure and depictions of the structure. This information is confidential and exempt from public inspection pursuant to sections 119.071(3)(a) and 119.071(3)(b), Florida Statutes. Only the cover page of this report may be inspected and copied.

FLORIDA DEPARTMENT OF TRANSPORTATION
BRIDGE MANAGEMENT SYSTEM
Inspection/CIDR/Bridge Profile Report
Inspection

Structure ID: 770074

DISTRICT: D5 - Deland **INSPECTION DATE: 4/1/2019 BOEQ**

Element 8475 - R/Conc Walls

Photo 5: Spall/Delamination in North Barrier Wall

This report contains information relating to the physical security of a structure and depictions of the structure. This information is confidential and exempt from public inspection pursuant to sections 119.071(3)(a) and 119.071(3)(b), Florida Statutes. Only the cover page of this report may be inspected and copied.

FLORIDA DEPARTMENT OF TRANSPORTATION
BRIDGE MANAGEMENT SYSTEM
Inspection/CIDR/Bridge Profile Report
Inspection

Structure ID: 770074

DISTRICT: D5 - Deland **INSPECTION DATE: 4/1/2019 BOEQ**

Element 215 - Re Conc Abutment

Photo 6: Spall in Cheekwall at Southeast End

This report contains information relating to the physical security of a structure and depictions of the structure. This information is confidential and exempt from public inspection pursuant to sections 119.071(3)(a) and 119.071(3)(b), Florida Statutes. Only the cover page of this report may be inspected and copied.

FLORIDA DEPARTMENT OF TRANSPORTATION
BRIDGE MANAGEMENT SYSTEM
Inspection/CIDR/Bridge Profile Report
Inspection

Structure ID: 770074

DISTRICT: D5 - Deland **INSPECTION DATE: 4/1/2019 BOEQ**

Element 225 - Steel Pile (8516 - Painted Steel)

Photo 7: Typical Surface Corrosion, Flaking, and Pitting in Pile

This report contains information relating to the physical security of a structure and depictions of the structure. This information is confidential and exempt from public inspection pursuant to sections 119.071(3)(a) and 119.071(3)(b), Florida Statutes. Only the cover page of this report may be inspected and copied.

FLORIDA DEPARTMENT OF TRANSPORTATION
BRIDGE MANAGEMENT SYSTEM
Inspection/CIDR/Bridge Profile Report
Inspection

Structure ID: 770074

DISTRICT: D5 - Deland **INSPECTION DATE: 4/1/2019 BOEQ**

Element 109 - Pre Opn Conc Girder/Beam

Photo 8: Typical Spall in Beam, Beam 1-8 shown

This report contains information relating to the physical security of a structure and depictions of the structure. This information is confidential and exempt from public inspection pursuant to sections 119.071(3)(a) and 119.071(3)(b), Florida Statutes. Only the cover page of this report may be inspected and copied.

FLORIDA DEPARTMENT OF TRANSPORTATION
BRIDGE MANAGEMENT SYSTEM
Inspection/CIDR/Bridge Profile Report
Inspection

Structure ID: 770074

DISTRICT: D5 - Deland **INSPECTION DATE: 4/1/2019 BOEQ**

Element 109 - Pre Opn Conc Girder/Beam

Photo 9: Typical Spall in Beam, Beam 6-11 shown

This report contains information relating to the physical security of a structure and depictions of the structure. This information is confidential and exempt from public inspection pursuant to sections 119.071(3)(a) and 119.071(3)(b), Florida Statutes. Only the cover page of this report may be inspected and copied.

FLORIDA DEPARTMENT OF TRANSPORTATION
BRIDGE MANAGEMENT SYSTEM
Inspection/CIDR/Bridge Profile Report
Inspection

Structure ID: 770074

DISTRICT: D5 - Deland **INSPECTION DATE: 4/1/2019 BOEQ**

Element 109 - Pre Opn Conc Girder/Beam

Photo 10: Typical Spall in Beam, Beam 1-4 shown

This report contains information relating to the physical security of a structure and depictions of the structure. This information is confidential and exempt from public inspection pursuant to sections 119.071(3)(a) and 119.071(3)(b), Florida Statutes. Only the cover page of this report may be inspected and copied.

FLORIDA DEPARTMENT OF TRANSPORTATION
BRIDGE MANAGEMENT SYSTEM
Inspection/CIDR/Bridge Profile Report
Inspection

Structure ID: 770074

DISTRICT: D5 - Deland **INSPECTION DATE: 4/1/2019 BOEQ**

Element 331 - Re Conc Bridge Railing

Photo 11: Spall on South Barrier Wall in Span 6

This report contains information relating to the physical security of a structure and depictions of the structure. This information is confidential and exempt from public inspection pursuant to sections 119.071(3)(a) and 119.071(3)(b), Florida Statutes. Only the cover page of this report may be inspected and copied.

FLORIDA DEPARTMENT OF TRANSPORTATION
BRIDGE MANAGEMENT SYSTEM
Inspection/CIDR/Bridge Profile Report
Inspection

Structure ID: 770074

DISTRICT: D5 - Deland **INSPECTION DATE: 4/1/2019 BOEQ**

Element 333 - Other Bridge Railing

Photo 12: Delaminated Patch on South Barrier Wall, over End Bent 1

This report contains information relating to the physical security of a structure and depictions of the structure. This information is confidential and exempt from public inspection pursuant to sections 119.071(3)(a) and 119.071(3)(b), Florida Statutes. Only the cover page of this report may be inspected and copied.

FLORIDA DEPARTMENT OF TRANSPORTATION
BRIDGE MANAGEMENT SYSTEM
Inspection/CIDR/Bridge Profile Report
Inspection

Structure ID: 770074

DISTRICT: D5 - Deland **INSPECTION DATE: 4/1/2019 BOEQ**

Element 333 - Other Bridge Railing

Photo 13: Spall on outside face of Parapet Wall adjacent to End Bent 7

This report contains information relating to the physical security of a structure and depictions of the structure. This information is confidential and exempt from public inspection pursuant to sections 119.071(3)(a) and 119.071(3)(b), Florida Statutes. Only the cover page of this report may be inspected and copied.

FLORIDA DEPARTMENT OF TRANSPORTATION
BRIDGE MANAGEMENT SYSTEM
Inspection/CIDR/Bridge Profile Report
Inspection

Structure ID: 770074

DISTRICT: D5 - Deland **INSPECTION DATE: 4/1/2019 BOEQ**

Element 333 - Other Bridge Railing

Photo 14: Typical Spall on outside face of South Barrier Wall over Bent Cap 3

This report contains information relating to the physical security of a structure and depictions of the structure. This information is confidential and exempt from public inspection pursuant to sections 119.071(3)(a) and 119.071(3)(b), Florida Statutes. Only the cover page of this report may be inspected and copied.

FLORIDA DEPARTMENT OF TRANSPORTATION
BRIDGE MANAGEMENT SYSTEM
Inspection/CIDR/Bridge Profile Report
CIDR

REPORT ID: INSP005
Structure ID: 770074
DATE PRINTED: 5/15/2019

Description

Structure Unit Identification

Bridge/Unit Key: 770074 0
Structure Name: SR-414 over Lake Bosse
Description: MAIN SPAN 1
Type: M - Main

Structure Unit Identification

Bridge/Unit Key: 770074 1
Structure Name: SR-414 over Lake Bosse
Description: Approach Spans
Type: A - Approach

Roadway Identification

NBI Structure No (8): 770074
Position/Prefix (5): 1 - Route On Structure
Kind Hwy (Rte Prefix): 3 State Hwy
Design Level of Service: 1 Mainline
Route Number/Suffix: 00414 / 0 N/A (NBI)
Feature Intersect (6): Lake Bosse
Critical Facility: Not Defense-crit
Facility Carried (7): SR-414
Mile Point (11): 37.4
Latitude (16): 028d38'24.7" Long (17): 081d25'50.6"

Roadway Traffic and Accidents

Lanes (28): 4 Medians: 1 Speed: 45 mph
ADT Class: 4 ADT Class 4
Recent ADT (29): 48500 Year (30): 2017
Future ADT (114): 84148 Year (115): 2039
Truck % ADT (109): 6
Detour Length (19): 2.0 mi
Detour Speed: 45 mph
Accident Count: -1 Rate: -1

Roadway Classification

Nat. Hwy Sys (104): 0 Not on NHS
National base Net (12): 0 - Not on Base Network
LRS Inventory Rte (13a): 77 002 000 Sub Rte (13b): 00
Functional Class (26): 16 Urban Minor Arterial
On Federal Aid System: Yes
Defense Hwy (100): 0 Not a STRAHNET hwy
Direction of Traffic (102): 2 2-way traffic
Emergency: [X]

Roadway Clearances

Vertical (10): 99.99 ft Appr. Road (32): 93.6 ft
Horiz. (47): 115.09 ft Roadway (51): 93.6 ft
Truck Network (110): 0 Not part of natl netwo
Toll Facility (20): 3 On free road
Fed. Lands Hwy (105): 0 N/A (NBI)
School Bus Route: [ ]
Transit Route: [ ]

NBI Project Data

Proposed Work (075A): Not Applicable (P)
Work To Be Done By (075B): Not Applicable (P)
Improvement Length (076): 0 ft

Improvement Cost (094): $ 0.00
Roadway Improvement Cost (095): $ 0.00
Total Cost (096): $ 0.00
Year of Estimate (097):

NBI Rating

Channel (61): 7 Minor Damage
Deck (58): 7 Good
Superstructure (59): 7 Good
Substructure (60): 7 Good

Culvert (62): N N/A (NBI)
Waterway (71): 9 Above Desirable
Unrepaired Spalls: -1 sq.ft.
Review Required: [X]

This report contains information relating to the physical security of a structure and depictions of the structure. This information is confidential and exempt from public inspection pursuant to sections 119.071(3)(a) and 119.071(3)(b), Florida Statutes. Only the cover page of this report may be inspected and copied.

FLORIDA DEPARTMENT OF TRANSPORTATION
BRIDGE MANAGEMENT SYSTEM
Inspection/CIDR/Bridge Profile Report
CIDR

REPORT ID: INSP005
Structure ID: 770074
DATE PRINTED: 5/15/2019

Structure Identification

Admin Area: METROPLAN Orlando
District (2): D5 - Deland
County (3): (77)Seminole
Place Code (4): Maitland
Location (9): SR-414 over Lake Bosse
Border Br St/Reg (98): Not Applicable (P) Share: 0 %
Border Struct No (99):
FIPS State/Region (1): 12 Florida Region 4-Atlanta
NBIS Bridge Len (112): Y - Meets NBI Length

Parallel Structure (101): No || bridge exists
Temp. Structure (103): Not Applicable (P)
Maint. Resp. (21): 1 State Highway Agency
Owner (22): 1 State Highway Agency
Historic Signif. (37): 5 Not eligible for NRHP

Geometrics

Spans in Main Unit (45): 1
Approach Spans (46): 5
Length of Max Span (48): 210 ft
Structure Length (49): 702 ft
Total Length: 740 ft
Deck Area: 90558 sqft
Structure Flared (35): 0 No flare

Age and Service

Year Built (27): 2000
Year Reconstructed (106): 0
Type of Service On (42a): 5 Highway-pedestrian
Under (42b): 5 Waterway
Fracture Critical Details: Not Applicable

Structure Type and Material

Curb/Sidewalk (50): Left: 5 ft Right: 5 ft
Bridge Median (33): 2 Closed Med w/o Barrier
Main Span Material (43A): 3 Steel
Appr Span Material (44A): 5 Prestressed Concrete
Main Span Design (43B): 02 Stringer/Girder
Appr Span Design (44B): 02 Stringer/Girder

Deck Type and Material

Deck Width (52): 129 ft
Skew (34): 0 deg
Deck Type (107): 1 Concrete-Cast-in-Place
Surface (108): 1 Monolithic Concrete
Membrane: 0 None
Deck Protection: None

Appraisal

Structure Appraisal

Open/Posted/Closed (41): A Open, no restriction
Deck Geometry (68): 9 Above Desirable Crit
Underclearances (69): N Not applicable (NBI)
Approach Alignment (72): 8-No Speed Red thru Curv
Bridge Railings (36a): 1 Meets Standards
Transitions (36b): 1 Meets Standards

Approach Guardrail (36c): 1 Meets Standards
Approach Guardrail Ends (36d): 1 Meets Standards
Scour Critical (113): 5 Stable w/in footing

Navigation Data

Navigation Control (38): Permit Not Required
Nav Vertical Clr (39): 0 ft
Nav Horizontal Clr (40): 0 ft
Min Vert Lift Clr (116): 0 ft
Pier Protection (111): Not Applicable (P)

NBI Condition Rating

Sufficiency Rating: 92.7
Health Index: 95.11
Structural Eval (67): 7 Above Min Criteria
Deficiency: Not Deficient

Minimum Vertical Clearance

Over Structure (53): 99.99 ft
Under (reference) (54a): N Feature not hwy or RR
Under (54b): 0 ft

Minimum Lateral Underclearance

Reference (55a): N Feature not hwy or RR
Right Side (55b): 0 ft
Left Side (56): 0 ft

Schedule

Current Inspection

Inspection Date: 04/01/2019
Inspector: KNIEIGB - Bill Gehry
Bridge Group: C9K21
Alt. Bridge Group:
Primary Type: Regular NBI
Review Required: X

Next Inspection Date Scheduled

NBI: 04/01/2021
Element: 04/01/2021
Fracture Critical:
Underwater:
Other/Special:

This report contains information relating to the physical security of a structure and depictions of the structure. This information is confidential and exempt from public inspection pursuant to sections 119.071(3)(a) and 119.071(3)(b), Florida Statutes. Only the cover page of this report may be inspected and copied.

FLORIDA DEPARTMENT OF TRANSPORTATION
BRIDGE MANAGEMENT SYSTEM

REPORT ID: INSP005

Inspection/CIDR/Bridge Profile Report

Structure ID: 770074

CIDR

DATE PRINTED: 5/15/2019

Schedule Cont.

Inspection Types Performed NBI [X] Element [X] Fracture Critical [ ] Underwater [ ] Other Special [ ]

Inspection Intervals	Required (92)	Frequency (92)		Last Date (93)		Inspection Resources	
Fracture Critical	[ ]	mos				Crew Hours:	15
Underwater	[ ]	mos				Flagger Hours:	0
Other Special	[ ]	mos				Helper Hours:	0
NBI		24 mos	(91)	04/01/2019	(90)	Snooper Hours:	0
						Special Crew Hours:	0
						Special Equip Hours:	0

Bridge Related

General Bridge Information

Parallel Bridge Seq:
Channel Depth: 1.8 ft
Radio Frequency: -1
Phone Number:
Exception Date:
Exception Type: Unknown
Accepted By Maint: 12/13/2000
Warranty Expiration: 00/00/0000
Performance Rating: Good

Bridge Rail 1: Conc parapet-alum-rail
Bridge Rail 2: Concrete jersey type
Electrical Devices: No electric service
Culvert Type: Not applicable
Maintenance Yard: 593-Oviedo Sub-Yard
FIHS ON / OFF: No Routes on FIHS
Previous Structure:
2nd Previous Structure:
Replacement Structure:

Permitted Utilities: Power [ ] Water [ ] Gas [ ] Fiber Optic [ ] Sewage [ ] Other [ ]

Bridge Load Rating Information

Inventory Type (065): 1 LF Load Factor
Operating Type (063): 1 LF Load Factor
Original Design Load (031): 5 MS 18 (HS 20)
Date: 12/14/2000
Initials: ys
Load Rating Rev. Recom.: No
Load Rating Plans Status: Design or Construction

Inventory Rating (066): 48.7 tons
Operating Rating (064): 80.9 tons
FL120 Permit Rating: -1.0 tons
HS20/FL120 Max Span Rating: 80.9 tons
Dynamic Impact in Percent: 23 %
Governing Span Length: 90.6 ft
Minimum Span Length:
Distribution Method: AASHTO formula

Load Rating Notes:

LEGAL LOADS

SU2: 72.0 tons
SU3: 77.0 tons
SU4: 77.0 tons
C3: 86.0 tons
C4: 85.0 tons
C5: 86.0 tons
ST5: 99.0 tons
Posting (070): 5 At/Above Legal Loads
Open/Posted/Closed (041): A Open, no restriction

POSTING

Recom. SU Posting: 99 tons
Recom. C Posting: 99 tons
Recom. ST5 Posting: 99 tons
Actual SU Posting: 99 tons
Actual C Posting: 99 tons
Actual ST5 Posting: 99 tons
Actual Blanket Posting: 99 tons
Emergency Vehicle: 1 EV inapplicable

FLOOR BEAM (FB) FB Present: No

FB Span Length, Gov: 0.0 ft
FB Spacing, Gov: 0.0 ft
FB OPR Rating: 0.0 tons
FB SU4 OPR Rating: 0.0 tons
FB FL120 Rating: 0.0 tons

SEGMENTAL (SEG)

SEG Wing-Span: -1.0 ft
SEG Web-to-Web Span: -1.0 ft
SEG Transverse HL93 Operating: -1.00 RF

Bridge Scour and Storm Information

Pile Driving Record: All pile driving records
Foundation Type: Foundation details
Mode of Flow: Riverine
Rating Scour Eval: Not Applicable
Highest Scour Eval: No phase completed
Scour Evaluation Method:

Scour Recommended I: Not Applicable
Scour Recommended II: Not Applicable
Scour Recommended III: Not Applicable
Scour Elevation: 999 ft
Action Elevation: 999 ft
Storm Frequency: 999

This report contains information relating to the physical security of a structure and depictions of the structure. This information is confidential and exempt from public inspection pursuant to sections 119.071(3)(a) and 119.071(3)(b), Florida Statutes. Only the cover page of this report may be inspected and copied.

FLORIDA DEPARTMENT OF TRANSPORTATION
BRIDGE MANAGEMENT SYSTEM

REPORT ID: INSP005

Inspection/CIDR/Bridge Profile Report

Structure ID: 770074

CIDR

DATE PRINTED: 5/15/2019

Elements

Inspection Date: 04/01/2019 BOEQ

DECKS : Decks/Slabs

Str Unit	Elem/Env	Description	Qty1	%1	Qty2	%2	Qty3	%3	Qty4	%4	T Qty
0	12 / 2	Re Concrete Deck	90558	100	0	.	0	.	0	.	90558 sq.ft

DECKS : Joints

Str Unit	Elem/Env	Description	Qty1	%1	Qty2	%2	Qty3	%3	Qty4	%4	T Qty
0	300 / 2	Strip Seal Exp Joint	516	100	0	.	0	.	0	.	516 ft

MISCELLANEOUS : Channel

Str Unit	Elem/Env	Description	Qty1	%1	Qty2	%2	Qty3	%3	Qty4	%4	T Qty
0	8290 / 2	Channel	0	.	1	100	0	.	0	.	1 (EA)
0	9130 / 2	Aggradation	0	.	1	100	0	.	0	.	1 (EA)

MISCELLANEOUS : Other Elements

Str Unit	Elem/Env	Description	Qty1	%1	Qty2	%2	Qty3	%3	Qty4	%4	T Qty
0	321 / 2	Re Conc Approach Slab	4576	93.35	323	6.59	3	0.06	0	.	4902 sq.ft
0	1080 / 2	Delamination/Spall/Patched Area	0	.	3	50	3	50	0	.	6 sq.ft
0	1130 / 2	Cracking (RC and Other)	0	.	320	100	0	.	0	.	320 sq.ft

MISCELLANEOUS : Other Elements

Str Unit	Elem/Env	Description	Qty1	%1	Qty2	%2	Qty3	%3	Qty4	%4	T Qty
0	8475 / 2	R/Conc Walls	76	95	1	1.25	3	3.75	0	.	80 ft
0	1080 / 2	Delamination/Spall/Patched Area	0	.	1	25	3	75	0	.	4 ft

MISCELLANEOUS : Other Elements

Str Unit	Elem/Env	Description	Qty1	%1	Qty2	%2	Qty3	%3	Qty4	%4	T Qty
0	8478 / 2	MSE Walls	1200	100	0	.	0	.	0	.	1200 ft

SUBSTRUCTURE : Substructure

Str Unit	Elem/Env	Description	Qty1	%1	Qty2	%2	Qty3	%3	Qty4	%4	T Qty
0	215 / 2	Re Conc Abutment	239	92.28	18	6.95	2	0.77	0	.	259 ft
0	1080 / 2	Delamination/Spall/Patched Area	0	.	0	.	2	100	0	.	2 ft
0	1120 / 2	Efflorescence/Rust Staining	0	.	16	100	0	.	0	.	16 ft
0	1130 / 2	Cracking (RC and Other)	0	.	2	100	0	.	0	.	2 ft

SUBSTRUCTURE : Substructure

Str Unit	Elem/Env	Description	Qty1	%1	Qty2	%2	Qty3	%3	Qty4	%4	T Qty
0	225 / 2	Steel Pile	0	.	124	100	0	.	0	.	124 (EA)
0	1000 / 2	Corrosion	0	.	124	100	0	.	0	.	124 (EA)
0	8516 / 2	Painted Steel	7012	66.67	0	.	3506	33.33	0	.	10518 sq.ft
0	3440 / 2	Eff (Stl Protect Coat)	0	.	0	.	3506	100	0	.	3506 sq.ft

SUBSTRUCTURE : Substructure

Str Unit	Elem/Env	Description	Qty1	%1	Qty2	%2	Qty3	%3	Qty4	%4	T Qty
0	234 / 2	Re Conc Pier Cap	598	96.45	22	3.55	0	.	0	.	620 ft
0	1090 / 2	Exposed Rebar	0	.	22	100	0	.	0	.	22 ft

SUBSTRUCTURE : Substructure

Str Unit	Elem/Env	Description	Qty1	%1	Qty2	%2	Qty3	%3	Qty4	%4	T Qty

This report contains information relating to the physical security of a structure and depictions of the structure. This information is confidential and exempt from public inspection pursuant to sections 119.071(3)(a) and 119.071(3)(b), Florida Statutes. Only the cover page of this report may be inspected and copied.

FLORIDA DEPARTMENT OF TRANSPORTATION
BRIDGE MANAGEMENT SYSTEM

REPORT ID: INSP005 | **Inspection/CIDR/Bridge Profile Report**

Structure ID: 770074 | **CIDR** | **DATE PRINTED: 5/15/2019**

0	8396 / 2	Other Abutment Slope Protection	6114	100	0	.	0	.	0	.	6114 (SF)

SUPERSTRUCTURE : Bearings

Str Unit	Elem/Env	Description	Qty1	%1	Qty2	%2	Qty3	%3	Qty4	%4	T Qty
0	310 / 2	Elastomeric Bearing	132	100	0	.	0	.	0	.	132 each

SUPERSTRUCTURE : Superstructure

Str Unit	Elem/Env	Description	Qty1	%1	Qty2	%2	Qty3	%3	Qty4	%4	T Qty
0	107 / 2	Steel Opn Girder/Beam	2310	100	0	.	0	.	0	.	2310 ft
0	8517 / 2	Weathering Steel	23100	100	0	.	0	.	0	.	23100 sq.ft

SUPERSTRUCTURE : Superstructure

Str Unit	Elem/Env	Description	Qty1	%1	Qty2	%2	Qty3	%3	Qty4	%4	T Qty
0	109 / 2	Pre Opn Conc Girder/Beam	5377	99.76	0	.	13	0.24	0	.	5390 ft
0	1080 / 2	Delamination/Spall/Patched Area	0	.	0	.	13	100	0	.	13 ft

SUPERSTRUCTURE : Superstructure

Str Unit	Elem/Env	Description	Qty1	%1	Qty2	%2	Qty3	%3	Qty4	%4	T Qty
0	331 / 2	Re Conc Bridge Railing	1272	88.33	165	11.46	3	0.21	0	.	1440 ft
0	1080 / 2	Delamination/Spall/Patched Area	0	.	2	40	3	60	0	.	5 ft
0	1090 / 2	Exposed Rebar	0	.	1	100	0	.	0	.	1 ft
0	1120 / 2	Efflorescence/Rust Staining	0	.	162	100	0	.	0	.	162 ft

SUPERSTRUCTURE : Superstructure

Str Unit	Elem/Env	Description	Qty1	%1	Qty2	%2	Qty3	%3	Qty4	%4	T Qty
0	333 / 2	Other Bridge Railing	1367	94.93	64	4.44	9	0.63	0	.	1440 ft
0	1080 / 2	Delamination/Spall/Patched Area	0	.	2	18.18	9	81.82	0	.	11 ft
0	1120 / 2	Efflorescence/Rust Staining	0	.	62	100	0	.	0	.	62 ft

Total Number of Elements*: 15
*excluding defects/protective systems

Inspection Information

Inspection Date: 04/01/2019 **Type:** Regular NBI
Inspector: KNIEIGB - Bill Gehry
Inspection Notes: Sufficiency Rating Calculation Accepted by knieivd at 5/15/2019 2:28:54 PM

Inspection Date: 04/17/2017 **Type:** Regular NBI
Inspector: KNIEIRK - Kyle Rankin
Inspection Notes: Note: At the time of this inspection the water depth was during low water conditions (less than 3.0ft.) with no dive performed. The inspection team inspected the elements previously noted as being underwater

Sufficiency Rating Calculation Accepted by knieism at 4/27/2017 4:23:02 PM

Inspection Date: 04/03/2015 **Type:** Regular NBI
Inspector: MT538VE - Evan Vanderhoof
Inspection Notes: Sufficiency Rating Calculation Accepted by MT538VE-P at 2015-04-03 16:32:46
Note: At the time of inspection the water depth was during low water conditions (less than 3.0ft.) with no dive performed. The inspection team inspected the elements previously noted as being underwater.

Inspection Date: 04/22/2013 **Type:** Regular NBI
Inspector: MT538RK - Ronald Kneale
Inspection Notes: Sufficiency Rating Calculation Accepted by MT538RK-P at 2013-04-29 06:52:43

This report contains information relating to the physical security of a structure and depictions of the structure. This information is confidential and exempt from public inspection pursuant to sections 119.071(3)(a) and 119.071(3)(b), Florida Statutes. Only the cover page of this report may be inspected and copied.

FLORIDA DEPARTMENT OF TRANSPORTATION
BRIDGE MANAGEMENT SYSTEM

REPORT ID: INSP005 | **Inspection/CIDR/Bridge Profile Report**

Structure ID: 770074 | **CIDR** | **DATE PRINTED: 5/15/2019**

Inspection Information

Inspection Date: 04/29/2011 **Type:** Regular NBI

Inspector: INACTIVE119 - Doug Shockley

Inspection Notes: Sufficiency Rating Calculation Accepted by MT538DS-P at 2011-05-06 08:26:03

The Local Maintenance/Operations Unit has been notified of the Non-Bridge Items listed below by means other than W.O.M..
Bridge #: 770074 Section #: 77002
Non-Bridge Item:
1. Replace the missing nuts and bolts in the utility hangers located on the north side of the bridge.

Inspection Date: 04/22/2009 **Type:** Regular NBI

Inspector: MT538VE - Evan Vanderhoof

Inspection Notes: Sufficiency Rating Calculation Accepted by MT538VE-P at 2009-04-22 16:34:31

The Local Maintenance/Operations Unit has been notified of the Non-Bridge Items listed below by means other than W.O.M..
Bridge #: 770074 Section #: 002
Non-Bridge Item:
1. Replace the missing nuts and bolts in the utility hangers located on the north side of the bridge.

Inspection Date: 05/16/2007 **Type:** Regular NBI

Inspector: INACTIVE404 - Harold Pillow

Inspection Notes: Sufficiency Rating Calculation Accepted by MT538HP-P at 2007-05-16 10:22:15

Inspection Date: 06/01/2005 **Type:** Regular NBI

Inspector: MT538VE - Evan Vanderhoof

Inspection Notes: Sufficiency Rating Calculation Accepted by mt538ve-P at 2005-06-07 16:25:29
Orlando Metro- North has been notified of the loose and missing nuts for the utility hangers in span 6 and to remove the sand and debris from the strip seal expansion joints in the sidewalk and shoulder areas by means other than WOM.

Inspection Date: 05/28/2003 **Type:** Regular NBI

Inspector: MT538CE - Chris Eckert

Inspection Notes: Sufficiency Rating Calculation Accepted by mt538ce-P at 2003-05-28 17:18:32
MT538CE-P inspection comments -
Structure 770074 -
Date 2003-05-28 -
Previous comments >

Inspection Date: 12/13/2000 **Type:** Regular NBI

Inspector: INACTIVE119 - Doug Shockley

Inspection Notes:

Sufficiency Rating Calculation Accepted by mt538wl at 12/20/2000 08:28:52
MT538wl inspection comments - NOTE: Orlando construction has been notified of the deficiencies noted in this report and will have the contractor correct them before the project is accepted.
Structure 770074 -
Date 12/13/2000 -
Previous comments > (none)

This report contains information relating to the physical security of a structure and depictions of the structure. This information is confidential and exempt from public inspection pursuant to sections 119.071(3)(a) and 119.071(3)(b), Florida Statutes. Only the cover page of this report may be inspected and copied.

FLORIDA DEPARTMENT OF TRANSPORTATION
BRIDGE MANAGEMENT SYSTEM

REPORT ID: INSP005

Inspection/CIDR/Bridge Profile Report

Structure ID: 770074

CIDR

DATE PRINTED: 5/15/2019

Structure Notes

Bridge #750743 is to the West and Bridge #770075 is to the East of this Bridge #770074.

This structure was inventoried from west to east.

On 04-15-15, S. McCartney found the load rating for #770074 complete and applicable.

This structure currently does not require weight restriction posting, as per the results of the most recent load analysis dated 12/14/00. Our inspection did not reveal significant deterioration or addition loads to suggest the need for a new load rating analysis.

Schedule Notes

This report contains information relating to the physical security of a structure and depictions of the structure. This information is confidential and exempt from public inspection pursuant to sections 119.071(3)(a) and 119.071(3)(b), Florida Statutes. Only the cover page of this report may be inspected and copied.

REPORT ID : INSP005

Structure ID : 770074

FLORIDA DEPARTMENT OF TRANSPORTATION BRIDGE MANAGEMENT SYSTEM

Inspection/CIDR/Bridge Profile Report

Bridge Profile

DATE PRINTED: 5/15/2019 3:32:33 PM

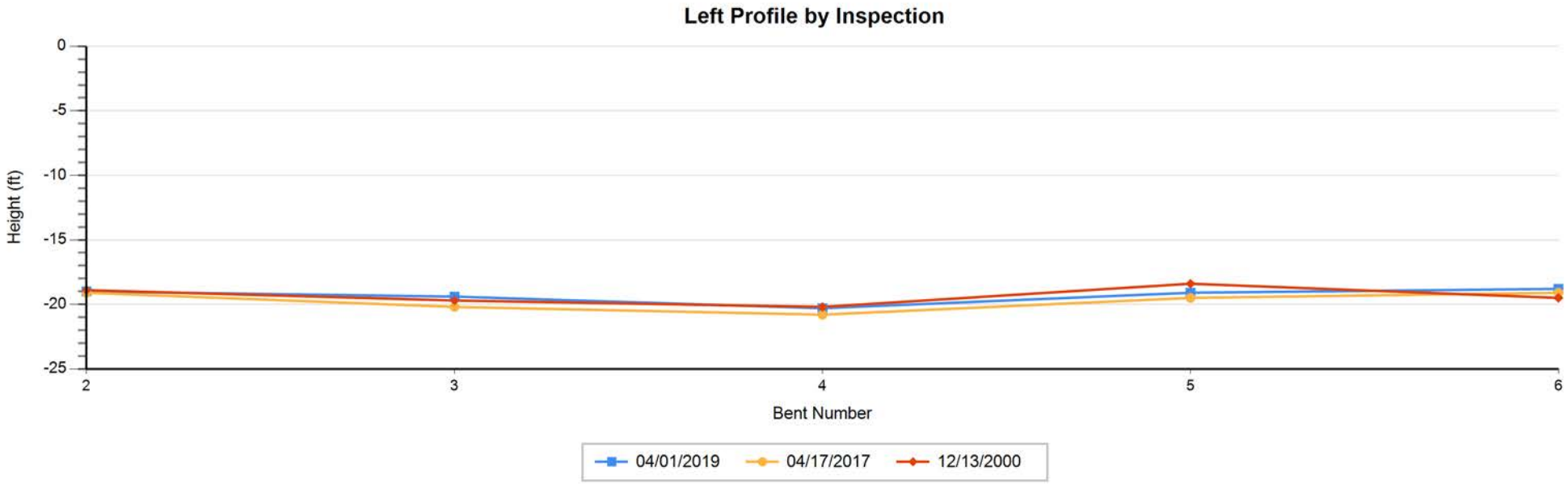

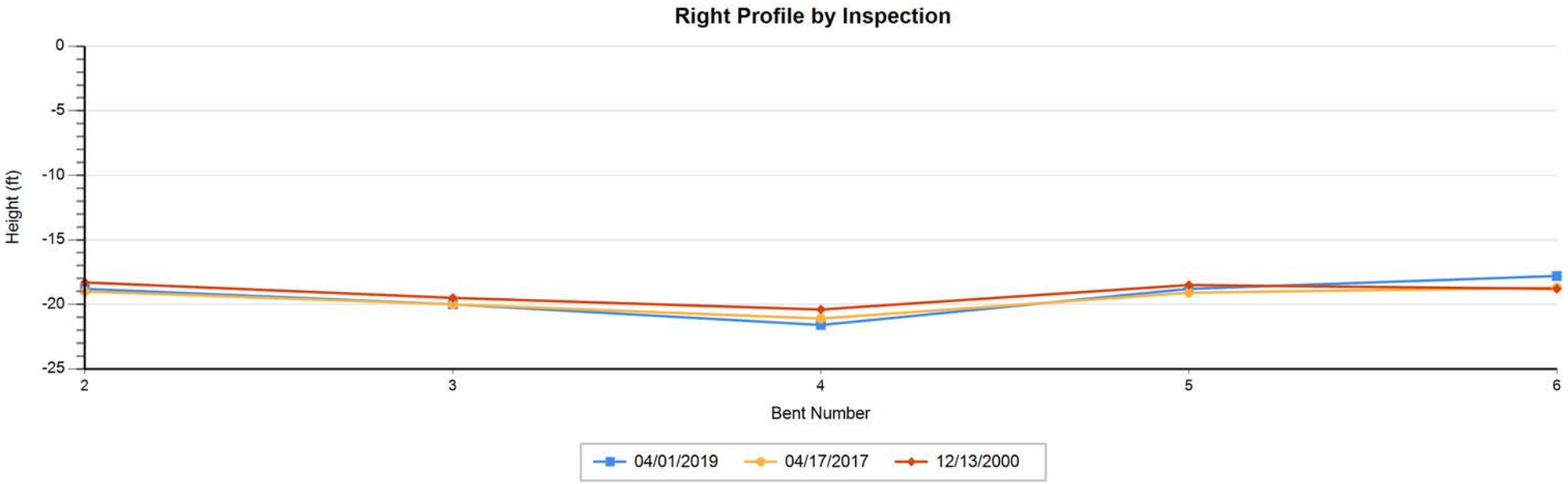

This report contains information relating to the physical security of a structure and depictions of the structure. This information is confidential and exempt from public inspection pursuant to sections 119.071(3)(a) and 119.071(3)(b), Florida Statutes. Only the cover page of this report may be inspected and copied.

FLORIDA DEPARTMENT OF TRANSPORTATION BRIDGE MANAGEMENT SYSTEM
Inspection/CIDR/Bridge Profile Report
Bridge Profile

DATE PRINTED: 5/15/2019 3:32:33 PM

Profile Data - Numerical Summary

Inspection Date and Key: 4/1/2019 BOEQ

(All Heights are in Feet)

Bent #	Left Height	Right Height
2	19.00	18.80
3	19.40	20.00
4	20.30	21.60
5	19.10	18.80
6	18.80	17.80

Air Temp: 80

Profile Notes:

Measurements referenced from the top of the outside parapet wall.
Waterline at Bent 4, Left = 18.9ft. and Right = 19.8ft.

Inspection Date and Key: 4/17/2017 IUMI

2	19.10	19.00
3	20.20	20.00
4	20.80	21.10
5	19.50	19.10
6	19.10	18.70

Air Temp: 80

Profile Notes:

All measurements were taken from the top of the outside parapet wall.
The waterline at Bent 5, Left Side = 19.4ft., Right Side = 20ft.

This report contains information relating to the physical security of a structure and depictions of the structure. This information is confidential and exempt from public inspection pursuant to sections 119.071(3)(a) and 119.071(3)(b), Florida Statutes. Only the cover page of this report may be inspected and copied.

REPORT ID : INSP005

Structure ID : 770074

FLORIDA DEPARTMENT OF TRANSPORTATION BRIDGE MANAGEMENT SYSTEM

Inspection/CIDR/Bridge Profile Report

Bridge Profile

DATE PRINTED: 5/15/2019 3:32:33 PM

Profile Data - Numerical Summary

Inspection Date and Key: 12/13/2000 WPPG

(All Heights are in Feet)

Bent #	Left Height	Right Height
2	18.90	18.30
3	19.70	19.50
4	20.20	20.40
5	18.40	18.50
6	19.50	18.80

Air Temp: 1

Profile Notes:

There is no channel under the bridge.
The bottom profile measurments were taken from the top of the concrete parapet wall.

This report contains information relating to the physical security of a structure and depictions of the structure. This information is confidential and exempt from public inspection pursuant to sections 119.071(3)(a) and 119.071(3)(b), Florida Statutes. Only the cover page of this report may be inspected and copied.

STATE OF FLORIDA DEPARTMENT OF TRANSPORTATION

METRIC LOAD CAPACITY INFORMATION METRIC

FORM 850-010-06
MAINTENANCE - 09/95

1. **BRIDGE DATA:**
Bridge Number 770074
STR Type Main [BID Item B1(43)] 302
Date
STR Type APR [BID Item B2(44)] 502

2. **POSTING DATA:**
Posted NO If yes, Existing
Restrictions
BID Item H8(41) A
Posting Needed NO If Yes, Proposed
Restrictions
BID Item H11(70) 5
BID Item H7(31) 5

3. **ANALYSIS DATA:**

A. Method of Analysis:
- X Load Factor
- Working Stress

B. Analysis System:
- X BARS
- SALOD
- BRUFEM
- Load Test
- X Other AASHTO LLDF

C. Analysis Based On:
- X Design Drawings
- As-Built Record Plans
- Shop Drawings
- Field Measurement
- Catalogs
- Sample Testing
- Other

D. Data Stored:
- District Office
- Central Office
- Microfilm
- Bridge Owner
- Materials Test Lab
- X Other S&F

E. Controlling Member Analyzed:

Material:
- 2 Steel
- 1 Concrete
  - Cast in Place
  - 1 Precast
  - 1 Prestressed
  - Post Tensioned
- Timber
- Other

Function:
- Slab
- Stringer
- Floor Beam
- 1,2 Girder
- Culvert
- Truss

Substructure:
- Bent Construction
  - Piling
  - Cap
- Pier Construction
  - Piling
  - Footing
  - Column
- Cap

Span:
- 1,2 Simple
- Continuous
- Frame

Slab:
- Non-Composite
- 1,2 Composite

Shape:
- Rolled
- 2 Built-up Welded
- Built-up Riveted
- Box Shape
- AASHTO Girders
- 1 Other BULB T 72"

Impact Factor: 23%

B.I.D. Item H2B 1
B.I.D. Item H9A 1
B.I.D. Item H10A 1

4. Load Rating Summary Table:

LOAD RATING SUMMARY FOR OPERATING RATING
(GROSS TONS)

VEHICLE TYPE Metric Tons (U.S. Tons)	METRIC RATING	U.S. RATING	RATING FACTOR	SPAN NO.	SPAN LENGTH	CONTR. MEMBER	M OR V	LLDF
SU2 - 15.4(17.0)	65	72	4.230	2	27.6	1	V	2.182
SU3 - 29.9 (33.0)	69	77	2.332	2	27.6	1	V	2.182
SU4 - 31.8 (35.0)	70	77	2.220	2	27.6	1	V	2.182
C3 - 25.4 (28.0)	78	86	3.090	2	27.6	1	V	2.182
C4 - 33.2 (36.6)	77	85	2.335	2	27.6	1	V	2.182
C5 - 36.3 (40.0)	78	86	2.165	2	27.6	1	V	2.182
ST5 - 36.3 (40.0)	89	99	2.473	2	27.6	1	V	2.182
HS20 - 32.7 (36.0)	73.5	80.9	2.249	2	27.6	1	V	2.182
HS20 - Inventory Rating	44.2	48.7	1.353	3	63.2	2	M	2.182

t = Metric Ton = 1,000 kg T = U.S. Ton = 2,000 pounds Mass

5. Comments:

6. Computations:
Performed By [signature] Date 3/11/99
Checked By Date
Reviewed By Date

7. Responsible Engineer: [signature]
P.E. # 20234 Date

*AASHTO*AASHTO*AASHTO*AASHTO*AASHTO*AASHTO*AASHTO*AASHTO*AASHTO*AASHTO*AASHTO*AASHTO*AASHTO*AASHTO*AASHTO*AASHTO*

AMERICAN ASSOCIATION OF STATE HIGHWAY
AND TRANSPORTATION OFFICIALS

A PROPRIETARY COMPUTER SOFTWARE PRODUCT

```
AASHTOWAREtm   BBBBBBBBBBBB      AAAAAAA      RRRRRRRRRRR      SSSSSSSSSSSSS
               BBBBBBBBBBBBB    AAAAAAAAA     RRRRRRRRRRRR     SSSSSSSSSSSSSS
               BBB        BBB   AA     AA     RRR      RRR     SSSS        SSSS
               BBB        BBB  AAA     AAA    RRR      RRR     SSS
               BBB        BBB  AAA     AAA    RRR      RRR     SSSS
               BBBBBBBBBBBB    AAA     AAA    RRRRRRRRRRRR      SSSSSSSSSSSSSS
               BBBBBBBBBBBBB   AAA     AAA    RRRRRRRRRRR       SSSSSSSSSSSSSS
               BBB        BBB  AAAAAAAAAAAAA  RRR    RRR                  SSSS
               BBB        BBB  AAAAAAAAAAAAA  RRR     RRR                 SSS
               BBB        BBB  AAA     AAA    RRR      RRR     SSSS        SSSS
               BBBBBBBBBBBBB   AAA     AAA    RRR       RRR     SSSSSSSSSSSSSS
               BBBBBBBBBBBB    AAA     AAA    RRR        RRR     SSSSSSSSSSSS
```

BRIDGE ANALYSIS AND RATING SYSTEM

(C) COPYRIGHT 1996 BY THE AMERICAN ASSOCIATION OF STATE
HIGHWAY AND TRANSPORTATION OFFICIALS, INC.
444 NORTH CAPITOL STREET, N.W., SUITE 249
WASHINGTON, D.C. 20001 U.S.A.
(202) 624-5800

RELEASE 5.5 - MOD 3.2

JANUARY 15, 1996

*AASHTO*AASHTO*AASHTO*AASHTO*AASHTO*AASHTO*AASHTO*AASHTO*AASHTO*AASHTO*AASHTO*AASHTO*AASHTO*AASHTO*AASHTO*AASHTO*

A770074S DAT

```
                                   RECORD                                                   REC.NO.
01      031199YYS                AA                                  *LF*    POST            100
02770074                                 CSC   98X  7000000X  111000006                      100
05770074        5117SR 414  77002     375000DRMP                                              200
067700741 MAITLAND BLVD OVER LAKE BOSSE                                                      300
067700742G01=GERDER 25 SPAN 3 STEEL PLATE GIRDER FY=50000KSI.DESIGN LOAD HS20                400
067700743 USED AASHTO LLDF                                                                   500
077700745000000          5000004500                                                          600
08770074G01 01    X  2072500                    CSC          2.182          X                700
09770074G01  X   518125B                                                                     800
10770074G01 01                  W285.5     X  2072500                                       900
11770074G01 0101X   24958301                                                                1000
11770074G01 0102X   16000002                                                                1100
11770074G01 0103X  125333403                                                                1200
11770074G01 0104X   16000002                                                                1300
11770074G01 0105X   24958301                                                                1400
12770074G01                            X01   94.6250118.50P0.875094.187                     1500
12770074G01                             01         020.625 93.00047.250                     1600
12770074G01                             01         0320.00 0.75000.3750                     1700
12770074G01                             02   95.2500118.50P0.875094.812                     1800
12770074G01                             02         020.625 93.00047.875                     1900
12770074G01                             02         0320.00 1.37500.6875                     2000
12770074G01                             03   96.6870120.50P1.437595.969                     2100
12770074G01                             03         020.625 93.00048.750                     2200
12770074G01                             03         0322.00 2.25001.1250                     2300
14770074G01 0101X   249583C  01   175.308.018.52.1296.0008.06.1204.6504.0060000             2400
14770074G01 0102X   160000C  01                                                              2500
14770074G01 0103X  1253334C  02   175.308.020.51.5796.0008.05.5704.6504.0060000             2600
14770074G01 0104X   160000C  01                                                              2700
14770074G01 0105X   249583C  01                                                              2800
16770074G01 01T01X  2072500C                                                                 2900
16770074G01 01B01X    21250SPNS              X    21250                                     3000
16770074G01 01B02X    73750NSNS              X    73750                                     3100
16770074G01 01B03X   135000NSSP              X   135000                                     3200
16770074G01 01B04X   148750SPNS              X   148750                                     3300
16770074G01 01B05X    81250NSSP              X    81250                                     3400
16770074G01 01B06X   460000SPSP02    230000  X   230000                                     3500
16770074G01 01B07X   232500SPSP              X   232500                                     3600
16770074G01 01B08X   460000SPSP02    230000  X   230000                                     3700
16770074G01 01B09X    81250SPNS              X    81250                                     3800
16770074G01 01B10X   148750NSSP              X   148750                                     3900
16770074G01 01B11X   135000SPNS              X   135000                                     4000
16770074G01 01B12X    73750NSNS              X    73750                                     4100
16770074G01 01B13X    21250NSSP              X    21250                                     4200
```

THE FOLLOWING STRUCTURES WERE SELECTED

770074

STRUCTURE I.D. = 770-074

```
*****************************************************************************************************************
*                                          STRUCTURE HEADER AND DESCRIPTION                                     *
*****************************************************************************************************************

  100-- 2                    EA/I/O/P =                FILE REQUESTS AND OUTPUT DATA EXCEPTIONS
                 TYPE =  CSC       YEAR =    98  LEN =  700.00 FT.        WIDTH =  111.00 FT.        6 SPANS SP.LOAD =
                 INV.LL.TRK.=        OP.LL.TRK.=


*****************************************************************************************************************
*                              STRUCTURE LOCATION AND PERMANENT IDENTIFICATION FACTORS                          *
*****************************************************************************************************************

  200-- 5    BRIDGE=            DIST./CO.= 5   117  CONST. ROUTE = SR 414      CONST. SECT.= 77002      CONST. STA.=  37+50.00
             MICROFILM REEL NO.   DESIGN PLANS=DRMP        COMPUTATIONS=            CORRESPONDENCE=
                 ROUTE I.D.=            MARKED ROUTE =


*****************************************************************************************************************
*                                                        COMMENTS                                               *
*****************************************************************************************************************

  300-- 6    1   MAITLAND BLVD OVER LAKE BOSSE
  400-- 6    2  G01=GERDER 25 SPAN 3 STEEL PLATE GIRDER FY=50000KSI.DESIGN LOAD HS20
  500-- 6    3   USED AASHTO LLDF


*****************************************************************************************************************
*                                 SPECIFICATIONS GENERALLY APPLICABLE TO STRUCTURE MEMBERS                      *
*****************************************************************************************************************


             STRUCT          REINF.       COMPOSITE          PRESTRESSED                    IMPACT FACTOR          TIMBER
             STEEL          CONCRETE      STEEL/CONC          CONCRETE                     INV   OP POST SPEC

  600-- 7    FY=50000.      FY =     0.    FY =50000.    LOSS =    0.  F"S =     0.    MAX =.00  .00  .00  .00      FY =     0.
                            F"C=     0.    F"C= 4500.    EG/ES=  .000  F"". C=     0.    MIN =.00  .00  .00  .00       FV =     0.


*****************************************************************************************************************
*                         MEMBER SPECIFICATIONS AND REQUIRED ANALYSIS-GIRDER,STRINGER AND FLOOR BEAM             *
*****************************************************************************************************************

         MEMBER SPANS  STIFF. SPAN 1     SPAN 2     SPAN 3   MATL   ALLOWABLE STRESS   LL DIST.  END  THRU  MAX  IMPACT  FACTOR
          ID       SYMM CODE (SPAN 4)   (SPAN 5)   (SPAN 6)  CODE     FY   FB FC* FC**  FACTOR  FL.BM DECK  INV  OP.  POST  SPEC

  700-- 8   G 1    1    X     207.250       .000       .000   CSC       .00       .00    2.182              .00  .00  .00   .00
```

MEMBER DESCRIPTION-GIRDER STRINGER AND FLOOR BEAM

	MEMBER ID	SPAN CP.	DISTANCE	M V	MOMENT OR SHEAR CAP.	MOMENT OR SHEAR RED.	SPAN CP.	DISTANCE	M YR	MOMENT OR SHEAR CAP.	MOMENT OR SHEAR RED.
800-- 9	G 1	0	51.81FT	B	.00	.00	0	.00		.00	.00

SUPERIMPOSED DEAD LOADS-GIRDERS,STRINGERS AND FLOOR BEAMS

	MEMBER ID	SYMM.	SPAN NO.	DISTANCE FR. LEFT SUPP.	LOAD TYPE	LOAD P OR W(L)	W(R)	LENGTH
900--10	G 1		1	.000FT.	W	285.5	.0	207.250FT.

SECTION RANGE SPECIFICATIONS

	MEMBER ID	SYMM.	SPAN NO.	RANGE NO.	RANGE LENGTH	SECTION NO. LEFT	RIGHT	SEC. VAR.	HINGE CODE	HINGE 1 DIST.	HINGE 2 DIST.	HYBRID GIRDER CODE	FY	CODE	FY
1000--11	G 1		1	1	24.958FT.	1	0			.000FT.	.000FT.		0.		0.
1100--11	G 1		1	2	16.000FT.	2	0			.000FT.	.000FT.		0.		0.
1200--11	G 1		1	3	125.333FT.	3	0			.000FT.	.000FT.		0.		0.
1300--11	G 1		1	4	16.000FT.	2	0			.000FT.	.000FT.		0.		0.
1400--11	G 1		1	5	24.958FT.	1	0			.000FT.	.000FT.		0.		0.

SECTION PROPERTIES (STEEL OR TIMBER) - GIRDERS STRINGERS, FLOOR BEAMS

	MEMBER ID	SEC.	A	I	S	CODE	SAME	ADR	H	ELE	A	IX	DY	DX
		NON-DETAILED DESCRIPTION					DETAILED DESCRIPTION							
1500--12	G 1	0	.00	.0	.0	X	1	0	94.63	1	18.50P	.9	94.2	.0
1600--12	G 1	0	.00	.0	.0		1	0	.00	2	.63	93.0	47.3	.0
1700--12	G 1	0	.00	.0	.0		1	0	.00	3	20.00	.8	.4	.0
1800--12	G 1	0	.00	.0	.0		2	0	95.25	1	18.50P	.9	94.8	.0
1900--12	G 1	0	.00	.0	.0		2	0	.00	2	.63	93.0	47.9	.0
2000--12	G 1	0	.00	.0	.0		2	0	.00	3	20.00	1.4	.7	.0
2100--12	G 1	0	.00	.0	.0		3	0	96.69	1	20.50P	1.4	96.0	.0
2200--12	G 1	0	.00	.0	.0		3	0	.00	2	.63	93.0	48.8	.0
2300--12	G 1	0	.00	.0	.0		3	0	.00	3	22.00	2.3	1.1	.0

REQUESTED COMPACT CODE, BUT PROGRAM USES BRACED NON COMPACT

SEE SHEET WITH GREEN TAP

SECTION PROPERTIES (COMPOSITE) - GIRDERS, STRINGERS, FLOOR BEAMS

	MEMBER ID	SYMM	SPAN	RANGE	RANGE LENGTH	COMP CODE	N	SECT	SAME	A R	WIDTH	THICK -NESS	FILLET WIDTH	FILLET THICK.	EFFECT. WIDTH	EFFECT. THICK.	DIST TO TOP SECT.
2400--14	G 1	1	1		24.958FT.	C	0	1	0		175.30	8.00	18.50	2.12	96.00	8.00	6.12
2500--14	G 1	1	2		16.000FT.	C	0	1	0		.00	.00	.00	.00	.00	.00	.00
2600--14	G 1	1	3		125.333FT.	C	0	2	0		175.30	8.00	20.50	1.57	96.00	8.00	5.57

2700--14	G 1	1	4	16.000FT. C	0	1	0	.00	.00	.00	.00	.00	.00	.00
2800--14	G 1	1	5	24.958FT. C	0	1	0	.00	.00	.00	.00	.00	.00	.00

****
* BRACING LENGTH SPECIFICATIONS - LOAD FACTOR ANALYSIS *
****

MEMBER ID	SYMM	SPAN	T/B	RANGE	RANGE LENGTH	SUPPORT COND. LEFT	RIGHT	SPACES	SPACING DISTANCE	STIFF SPACING
2900--16	G 1	1	T	1	207.250FT.C			0	.000FT.	.000IN.
3000--16	G 1	1	B	1	2.125FT.SP		NS	0	.000FT.	25.500IN.
3100--16	G 1	1	B	2	7.375FT.NS		NS	0	.000FT.	88.500IN.
3200--16	G 1	1	B	3	13.500FT.NS		SP	0	.000FT.	162.000IN.
3300--16	G 1	1	B	4	14.875FT.SP		NS	0	.000FT.	178.500IN.
3400--16	G 1	1	B	5	8.125FT.NS		SP	0	.000FT.	97.500IN.
3500--16	G 1	1	B	6	46.000FT.SP		SP	2	23.000FT.	276.000IN.
3600--16	G 1	1	B	7	23.250FT.SP		SP	0	.000FT.	279.000IN.
3700--16	G 1	1	B	8	46.000FT.SP		SP	2	23.000FT.	276.000IN.
3800--16	G 1	1	B	9	8.125FT.SP		NS	0	.000FT.	97.500IN.
3900--16	G 1	1	B	*	14.875FT.NS		SP	0	.000FT.	178.500IN.
4000--16	G 1	1	B	*	13.500FT.SP		NS	0	.000FT.	162.000IN.
4100--16	G 1	1	B	*	7.375FT.NS		NS	0	.000FT.	88.500IN.
4200--16	G 1	1	B	*	2.125FT.NS		SP	0	.000FT.	25.500IN.

SUMMARY OF RATING CALCULATIONS------STRUCTURE MEMBER G 1 BARS-PC RELEASE 5.5
INVENTORY AND/OR OPERATING ANALYSIS

INPUT CODING -- STRUCTURE D/P STR. I.D.-- 770-074

DATE 3/11/99
BY YYS

INVENTORY			OPERATING		
LIVE LOAD	RATING		LIVE LOAD	RATING	
HS20	HS	9.18	HS20	HS	15.30

STRUCTURE DESCRIPTION --

IDENTIFICATION	
TYPE	CSC
YEAR OF CONSTR.	1998
LENGTH	700.00 FEET
ROADWAY WIDTH	111.00 FEET
NUMBER OF SPANS	6

LOCATION --

DISTRICT	5
COUNTY	117
CONSTR. RTE.	SR 414
CONSTR. SEC.	77002
CONSTR. STA.	37+50.00
KEY RTE.	
MARKED RTE.	

MICROFILM REEL NUMBERS --

DESIGN PLANS	DRMP
COMPUTATIONS	
CORRESPONDENCE	

ANALYST REMARKS --

MAITLAND BLVD OVER LAKE BOSSE
G01=GERDER 25 SPAN 3 STEEL PLATE GIRDER FY=50000KSI.DESIGN LOAD HS20
USED AASHTO LLDF

INVENTORY RATING SUMMARY --

MEMBER ID.	G 1
SPAN	1
CRITICAL C.P. DIST.	103.6 FEET
LIVE LOAD DESIGNATION	HS20

	MOMENT (FT. KIPS)
MEMBER CAPACITY	26923.9
DL EFFECT	11955.1
CAPACITY FOR (LL+I)	2516.6
ACTUAL (LL+I)	5483.7

INVENTORY RATING HS 9.18

OPERATING RATING SUMMARY --

MEMBER ID.	G 1
SPAN	1
CRITICAL C.P. DIST.	103.6 FEET
LIVE LOAD DESIGNATION	HS20

	MOMENT (FT. KIPS)
MEMBER CAPACITY	44873.2
DL EFFECT	11955.1
CAPACITY FOR (LL+I)	4194.4
ACTUAL (LL+I)	5483.7

OPERATING RATING HS 15.30

SUMMARY OF RATING CALCULATIONS------STRUCTURE MEMBER G 1 BARS-PC RELEASE 5.5
POSTING ANALYSIS

INPUT CODING -- STRUCTURE D/P STR. I.D.-- 770-074

DATE 3/11/99
BY YYS

INVENTORY LIVE LOAD	RATING	OPERATING LIVE LOAD	RATING	POSTING TRUCK TYPE	GROSS TONS
HS20	HS 9.18	HS20	HS 15.30	VEH. SU3	33.90
				VEH. SU4	33.84
				VEH. C5	36.17

STRUCTURE DESCRIPTION --

IDENTIFICATION	
TYPE	CSC
YEAR OF CONSTR.	1998
LENGTH	700.00 FEET
ROADWAY WIDTH	111.00 FEET
NUMBER OF SPANS	6

LOCATION --

DISTRICT	5
COUNTY	117
CONSTR. RTE.	SR 414
CONSTR. SEC.	77002
CONSTR. STA.	37+50.00
KEY RTE.	
MARKED RTE.	

MICROFILM REEL NUMBERS --

DESIGN PLANS	DRMP
COMPUTATIONS	
CORRESPONDENCE	

ANALYST REMARKS --

MAITLAND BLVD OVER LAKE BOSSE
G01=GERDER 25 SPAN 3 STEEL PLATE GIRDER FY=50000KSI.DESIGN LOAD HS20
USED AASHTO LLDF

TRUCK TYPE VEH. SU3
MEMBER ID. G 1
SPAN 1
CRITICAL C.P. DIST. 103.6 FEET

	MOMENT (FT. KIPS)
MEMBER CAPACITY	44873.2
DL EFFECT	11955.1
CAPACITY FOR (LL+I)	4194.4
ACTUAL (LL+I)	4082.9
POSTING GROSS TONNAGE	33.9

TRUCK TYPE VEH. SU4
MEMBER ID. G 1
SPAN 1
CRITICAL C.P. DIST. 103.6 FEET

	MOMENT (FT. KIPS)
MEMBER CAPACITY	44873.2
DL EFFECT	11955.1
CAPACITY FOR (LL+I)	4194.4
ACTUAL (LL+I)	4338.3
POSTING GROSS TONNAGE	33.8

TRUCK TYPE VEH. C5
MEMBER ID. G 1
SPAN 1
CRITICAL C.P. DIST. 103.6 FEET

	MOMENT (FT. KIPS)
MEMBER CAPACITY	44873.2
DL EFFECT	11955.1
CAPACITY FOR (LL+I)	4194.4
ACTUAL (LL+I)	4638.3
POSTING GROSS TONNAGE	36.2

*** FINAL SUMMARY OF RATING RESULTS FOR --- STRUCTURE ID. 770-074 BARS-PC RELEASE 5.5
INVENTORY AND/OR OPERATING ANALYSIS

STRUCTURE

D/P STR. ID-- 770-074

INPUT CODING--

DATE 3/11/99

BY YYS

	INVENTORY		OPERATING	
LIVE LOAD	RATING		LIVE LOAD	RATING
HS20	HS	9.2	HS20	HS 15.3

STRUCTURE DESCRIPTION--

IDENTIFICATION	
TYPE	CSC
YEAR OF CONSTR.	1998
LENGTH	700.00 FEET
ROADWAY WIDTH	111.00 FEET
NUMBER OF SPANS	6

LOCATION--

DISTRICT	5
COUNTY	117
CONSTR. RTE.	SR 414
CONSTR. SEC.	77002
CONSTR. STA.	37+50.00
KEY RTE.	
MARKED RTE.	

MICROFILM REEL NUMBERS--

DESIGN PLANS	DRMP
COMPUTATIONS	
CORRESPONDENCE	

ANALYST REMARKS--

MAITLAND BLVD OVER LAKE BOSSE
G01=GERDER 25 SPAN 3 STEEL PLATE GIRDER FY=50000KSI.DESIGN LOAD HS20
USED AASHTO LLDF

Sh II-90

USE DESIGN $M_U = 31{,}626$ ft K

INVENTORY RATING SUMMARY

MEMBER I.D.	G 1
SPAN	1
CRITICAL C.P. DIST.	103.6 FEET
LIVE LOAD DESIGNATION	HS20

$$\text{CAP FOR LL} = \frac{31626 - 1.3(11955.1)}{2.167} = 7422.41 \text{ ft.K}$$

	MOMENT (FOOT-KIPS)
MEMBER CAPACITY	26923.9
DL EFFECT	11955.1
CAPACITY FOR (LL+I)	2516.6
ACTUAL (LL+I)	5483.7

INVENTORY RATING HS 9.18

$$HS_{INV} = \frac{7422.41(20)}{5483.7} = HS\ 27.07$$

OPERATING RATING SUMMARY

MEMBER I.D.	G 1
SPAN	1
CRITICAL C.P. DIST.	103.6 FEET
LIVE LOAD DESIGNATION	HS20

$$\text{CAP. FOR LL} = \tfrac{5}{3}(7422.41) = 12{,}370.68 \text{ ft K}$$

	MOMENT (FOOT-KIPS)
MEMBER CAPACITY	44873.2
DL EFFECT	11955.1
CAPACITY FOR (LL+I)	4194.4
ACTUAL (LL+I)	5483.7

OPERATING RATING HS 15.30

$$HS_{op} = \tfrac{5}{3}(27.07) = HS\ 45.1$$

*** FINAL SUMMARY OF RATING RESULTS FOR --- STRUCTURE ID. 770-074 BARS-PC RELEASE 5.5
POSTING ANALYSIS

STRUCTURE D/P STR. ID-- 770-074

INPUT CODING--

DATE 3/11/99
BY YYS

	INVENTORY LIVE LOAD	RATING	OPERATING LIVE LOAD	RATING	POSTING TRUCK TYPE	GROSS TONS
	HS20 HS	9.18	HS20 HS	15.30	VEH. SU3	33.9
					VEH. SU4	33.8
					VEH. C5	36.2

STRUCTURE DESCRIPTION--

IDENTIFICATION	
TYPE	CSC
YEAR OF CONSTR.	1998
LENGTH	700.00 FEET
ROADWAY WIDTH	111.00 FEET
NUMBER OF SPANS	6

LOCATION--

DISTRICT	5
COUNTY	117
CONSTR. RTE.	SR 414
CONSTR. SEC.	77002
CONSTR. STA.	37+50.00
KEY RTE.	
MARKED RTE.	

MICROFILM REEL NUMBERS--

DESIGN PLANS	DRMP
COMPUTATIONS	
CORRESPONDENCE	

ANALYST REMARKS--

MAITLAND BLVD OVER LAKE BOSSE
G01=GERDER 25 SPAN 3 STEEL PLATE GIRDER FY=50000KSI.DESIGN LOAD HS20
USED AASHTO LLDF

POSTING RATING SUMMARY

TRUCK TYPE	VEH. SU3	TRUCK TYPE	VEH. SU4	TRUCK TYPE	VEH. C5
MEMBER I.D.	G 1	MEMBER I.D.	G 1	MEMBER I.D.	G 1
SPAN	1	SPAN	1	SPAN	1
CRITICAL C.P. DIST.	103.6 FEET	CRITICAL C.P. DIST.	103.6 FEET	CRITICAL C.P. DIST.	103.6 FEET
	MOMENT (FOOT-KIPS)		MOMENT (FOOT-KIPS)		MOMENT (FOOT-KIPS)
MEMBER CAPACITY	44873.2	MEMBER CAPACITY	44873.2	MEMBER CAPACITY	44873.2
DL EFFECT	11955.1	DL EFFECT	11955.1	DL EFFECT	11955.1
CAPACITY FOR (LL+I)	4194.4	CAPACITY FOR (LL+I)	4194.4	CAPACITY FOR (LL+I)	4194.4
ACTUAL (LL+I)	4082.9	ACTUAL (LL+I)	4338.3	ACTUAL (LL+I)	4638.3
POSTING GROSS TONNAGE	33.9	POSTING GROSS TONNAGE	33.8	POSTING GROSS TONNAGE	36.2

MAIN -- NEW STRUCTURE I.D.= 770-074

SRATE1 -- MEMBER I.D.= G 1

*** WARNING 10700400 *** STRUCTURE ID 770-074
MEMBER ID G 1
WARNING: THE VALUE OF B'/T EXCEEDS THE REQUIREMENTS AS SET FORTH IN THE CURRENT AASHTO STANDARD SPECIFICATIONS FOR PROJECTING COMPRESSION FLANGE WIDTH. THE CUSTOMIZED BLOCKDATA HAS BEEN SET SO THAT THE SYSTEM WILL AUTOMATICALLY REDUCE THE WIDTH OF THE COMPRESSION FLANGE TO CONFORM WITH THE MAXIMUM LIMITS SET BY THE SPECIFICATION, AND USE THE REDUCED COMPRESSION FLANGE WIDTH TO COMPUTE A REDUCED SECTION MODULUS. THIS WILL AFFECT THE STRENGTH OF THE MEMBER AND ITS AVAILABLE MOMENT CAPACITY FOR LIVE LOAD PLUS IMPACT. HOWEVER, THE SYSTEM WILL USE THE ORIGINAL INPUT DIMENSIONS OF BOTH TENSION AND COMPRESSION FLANGES TO COMPUTE THE MOMENT OF INERTIA, IN ORDER THAT THE STIFFNESS CHARACTERISTICS OF THE MEMBER INFLUENCE LINES WILL NOT BE AFFECTED. (INFORMATIVE)

*** WARNING 12400600 *** STRUCTURE ID 770-074
MEMBER ID G 1
THE NON-COMPOSITE DC VALUE FOR A STIFFENED COMPOSITE GIRDER FAILS THE DC/TW CRITERIA ESTABLISHED BY AASHTO 10.49.2 OR 10.49.3.2. THE BARS SYSTEM WILL AUTOMATICALLY CALCULATE THE COMPOSITE DC VALUE AND RETEST THE AASHTO CRITERIA. (INFORMATIVE)

*** WARNING 12400100 *** STRUCTURE ID 770-074
MEMBER ID G 1
A STIFFENED GIRDER FAILS AT LEAST ONE LOAD FACTOR METHOD ANALYSIS TEST OF DEPTH VS. WEB THICKNESS. (SEE AASHTO STANDARD SPECIFICATION FOR HIGHWAY BRIDGES, SECTIONS 10.48.5.1, 10.48.6.1, 10.49.2 AND 10.49.3.2 (A) AND (B). (INFORMATIVE)

DETAIL DATA FOR FLEXURAL MEMBER

DATE 03/11/99

D/P STRUCTURE I.D. 770-074
MEMBER I.D.--G01
MATERIAL--CSC
LL DIST. FACT. = 2.182

NO. SPANS = 1
NOT SYMMETRICAL

SPAN NO.	LENGTH FT.	RNG. NO.	LENGTH FT.	SEC.NO. LT	SEC.NO. RT	VAR CODE S T P	VAR CODE S T B	DL DUE TO MEM. WEIGHT W(LT) LBS/FT	DL DUE TO MEM. WEIGHT W(RT) LBS/FT
1	207.250	1	24.958	01	01			303.9	303.9
		2	16.000	02	02			346.4	346.4
		3	125.333	03	03			466.5	466.5
		4	16.000	02	02			346.4	346.4
		5	24.958	01	01			303.9	303.9

SUPERIMPOSED DISTRIBUTED DL(S)
LENGTH DISTRIBUTED**********
DIST. FROM LT SUPPORT***

SPAN NO.	W(LT) LBS/FT	W(RT) LBS/FT	* FT.	* FT.	STIFF TRANS.	STIFF LONG.
1	285.5	285.5	.000	207.250	T	

SUPERIMPOSED CONCENTRATED DL(S)
DIST. FROM LT SUPPORT****

SPAN NO.	P KIPS	* FT.

CHECK POINTS RATED--

SPAN NO.	DIS FRM LT SPRT FT.	FUNC M	FUNC VL	FUNC VR	SPAN NO.	DIS FRM LT SPRT FT.	FUNC M	FUNC VL	FUNC VR
1	.000	X		X					
1	103.625	X	X	X					
1	207.250	X	X						
1	51.813	X	X	X					

DETAIL DATA AT MOMENT CHECK POINT FOR
COMPOSITE STEEL AND CONCRETE FLEXURAL MEMBER

BARS RELEASE 5.5

DATE 03/11/99

D/P STRUCTURE I.D. 770-074
MEMBER I.D.--G01
C.P. LOCATION 1.00

***** SECTION PROPERTIES IN COMPOSITE RANGE 1OF SPAN 1

	H IN.	GROSS AREA SQ.IN.	NET AREA + BEND SQ.IN.	NET AREA - BEND SQ.IN.	IX + BEND IN**4	IX - BEND IN**4	C (BOT) IN.	SECTION MODULUS TOP + BEND IN**3	TOP - BEND IN**3	BOTTOM + BEND IN**3	BOTTOM - BEND IN**3
NON-COM	.00	.00	.00	.00	.0	.0	.00	.0	.0	.0	.0
COM (N=N)					249483.4		83.36	12517.7		2992.7	
COM (N=3N)					182007.7		69.15	5330.1		2632.2	

(AS)C = .0 SQ. IN. , (DS)C = .0 SQ. IN. BRACE LENGTH = .00 , YBAR = .70

***** INFLUENCE LINE (SIMPLE SPAN)

X-DIST (FT.)	.000	.000	207.250	POS AREA = .0
Y-ORDINATE	.000	.000	.000	

***** ORDINATES OF AND AREAS UNDER INFLUENCE LINE (CONTINUOUS SPAN)

	SPAN	SPAN	SPAN	SPAN	SPAN	SPAN
T 0						
E 1						
N 2						
T 3						
H 4						
5						
P 6						
O 7						
I 8						
N 9						
T 0						
POS AREA	.0	.0	.0	.0	.0	.0
NEG AREA	.0	.0	.0	.0	.0	.0

***** ULTIMATE STRENGTH ***** MOMENT CAPACITY

	M1/M2 TOP	M1/M2 BOTTOM	TOP + BEND FT-KIPS	TOP - BEND FT-KIPS	BOTTOM + BEND FT-KIPS	BOTTOM - BEND FT-KIPS
INVENTORY	.0	.0				
OPERATING	.0					
POST VEH1	.0					
POST VEH2	.0					
POST VEH3	.0					
POST SPEC	.0					

***** DL MOMENT EFFECT

DL FT-KIPS	SDL FT-KIPS
.0	.0

AREA TOTALS .0

***** AVAIL.CAPAC.FOR LL+IMPACT

	TOP +BEND F-KPS	TOP -BEND F-KPS	BOT +BEND F-KPS	BOT -BEND F-KPS
INVENTORY	24072.4	.0	5755.2	.0
OPERATING	40120.7	.0	9592.1	.0
VEH. 1	40120.7	.0	9592.1	.0
VEH. 2	40120.7	.0	9592.1	.0
VEH. 3	40120.7	.0	9592.1	.0
SPECIAL	.0	.0	.0	.0

***** LIVE LOAD AND RATING CALCULATIONS (IMPACT FACTOR = .150 FOR +BEND AND = .150 FOR -BEND)

LIVE LOAD		TRUCK LOAD LL+IMP FT-KIPS	TRUCK LOAD LL FT-KIPS	LOC.NO. 1 WHEEL FT.	DIR	AXLE SPACE FT.	LANE LOAD LL+IMP FT-KIPS	LANE LOAD LL FT-KIPS	LOC.CONC LOAD FT.	LOC.CONC LOAD 2 FT.	RATING FACT.	SAFE LOAD CAPACITY TONS	RATING VALUE
INV HS20	+BEND	.0	.0	.000	L	.0	.0	.0	.000		5.538	199.4	HS110.8
	-BEND	.0	.0	.000	L	.0	.0	.0	.000	.000			
OPER HS20	+BEND	.0	.0	103.626	L	.0	.0	.0	.000		9.230	332.3	HS184.6
	-BEND	.0	.0	.000	L	.0	.0	.0	.000	.000			
POST SU2	+BEND	.0	.0	76.628	L						25.630	435.7	
	-BEND	.0	.0	.000	L								
POST SU4	+BEND	.0	.0	103.625	L						12.587	440.6	
	-BEND	.0	.0	.000	L								
POST C4	+BEND	.0	.0	103.626	L						12.380	453.7	
	-BEND	.0	.0	.000	L								
POST SPEC	+BEND	.0	.0	.000							.000	.0	
	-BEND	.0	.0	.000									

DETAIL DATA AT MOMENT CHECK POINT FOR
COMPOSITE STEEL AND CONCRETE FLEXURAL MEMBER

BARS RELEASE 5.5

DATE 03/11/99

D/P STRUCTURE I.D. 770-074
MEMBER I.D.--G01
C.P. LOCATION 1.25

***** SECTION PROPERTIES IN COMPOSITE RANGE 3OF SPAN 1

	H IN.	GROSS AREA SQ.IN.	---NET AREA--- + BEND SQ.IN.	- BEND SQ.IN.	IX + BEND IN**4	IX - BEND IN**4	C (BOT) IN.	SECTION MODULUS TOP + BEND IN**3	TOP - BEND IN**3	BOTTOM + BEND IN**3	BOTTOM - BEND IN**3
NON-COM	.00	.00	.00	.00	.0	.0	.00	.0	.0	.0	.0
COM (N=N)					420630.7		66.64	14000.4		6311.7	
COM (N=3N)					308390.1		53.16	7085.6		5800.8	

(AS)C = .0 SQ. IN. , (DS)C = .0 SQ. IN. BRACE LENGTH = .00 , YBAR = 12.50

***** INFLUENCE LINE (SIMPLE SPAN)

X-DIST (FT.)	.000	51.813	207.250	POS AREA = 4026.8
Y-ORDINATE	.000	38.859	.000	

***** ULTIMATE STRENGTH ***** MOMENT CAPACITY

	M1/M2 TOP	M1/M2 BOTTOM	TOP + BEND FT-KIPS	TOP - BEND FT-KIPS	BOTTOM + BEND FT-KIPS	BOTTOM - BEND FT-KIPS
INVENTORY	.0	.0				
OPERATING	.0					
POST VEH1	.0					
POST VEH2	.0					
POST VEH3	.0					
POST SPEC	.0					

***** ORDINATES OF AND AREAS UNDER INFLUENCE LINE (CONTINUOUS SPAN)

	SPAN	SPAN	SPAN	SPAN	SPAN	SPAN
T 0						
E 1						
N 2						
T 3						
H 4						
5						
P 6						
O 7						
I 8						
N 9						
T 0						
POS AREA	.0	.0	.0	.0	.0	.0
NEG AREA	.0	.0	.0	.0	.0	.0

AREA TOTALS .0

***** DL MOMENT EFFECT

DL FT-KIPS	SDL FT-KIPS
7787.8	1149.7

***** AVAIL.CAPAC.FOR LL+IMPACT

	TOP +BEND F-KPS	TOP -BEND F-KPS	BOT +BEND F-KPS	BOT -BEND F-KPS
INVENTORY	8681.1	.0	5615.4	.0
OPERATING	14468.4	.0	9359.0	.0
VEH. 1	111111.0	.0	9359.0	.0
VEH. 2	111111.0	.0	9359.0	.0
VEH. 3	111111.0	.0	9359.0	.0
SPECIAL	.0	.0	.0	.0

***** LIVE LOAD AND RATING CALCULATIONS (IMPACT FACTOR = .150 FOR +BEND AND = .150 FOR -BEND)

LIVE LOAD		TRUCK LOAD LL+IMP FT-KIPS	TRUCK LOAD LL FT-KIPS	TRUCK LOAD LOC.NO. 1 WHEEL FT.	DIR	AXLE SPACE FT.	LANE LOAD LL+IMP FT-KIPS	LANE LOAD LL FT-KIPS	LOC.CONC LOAD FT.	LOC.CONC LOAD 2 FT.	RATING FACT.	SAFE LOAD CAPACITY TONS	RATING VALUE
INV HS20	+BEND	3301.0	2869.2	79.813	R	.0	4112.8	3574.8	51.813		1.365	49.2	HS 27.3
	-BEND	.0	.0	.000	L	.0	.0	.0	.000	.000			
OPER HS20	+BEND	3301.0	2869.2	79.813	R	.0	4112.8	3574.8	51.813		2.276	81.9	HS 45.5
	-BEND	.0	.0	.000	L	.0	.0	.0	.000	.000			
POST SU2	+BEND	1609.4	1398.9	64.813	R						5.815	98.9	
	-BEND	.0	.0	.000	L								
POST SU4	+BEND	3264.6	2837.6	69.313	R						2.867	100.3	
	-BEND	.0	.0	.000	L								
POST C4	+BEND	3284.5	2854.9	87.813	R						2.849	104.4	
	-BEND	.0	.0	.000	L								
POST SPEC	+BEND	.0	.0	.000							.000	.0	
	-BEND	.0	.0	.000									

DETAIL DATA AT MOMENT CHECK POINT FOR
COMPOSITE STEEL AND CONCRETE FLEXURAL MEMBER

BARS RELEASE 5.5

DATE 03/11/99

D/P STRUCTURE I.D. 770-074
MEMBER I.D.--G01
C.P. LOCATION 1.50

***** SECTION PROPERTIES IN COMPOSITE RANGE 3OF SPAN 1

	H IN.	GROSS AREA SQ.IN.	---NET AREA--- + BEND SQ.IN.	- BEND SQ.IN.	IX + BEND IN**4	IX - BEND IN**4	C (BOT) IN.	SECTION MODULUS TOP + BEND IN**3	TOP - BEND IN**3	BOTTOM + BEND IN**3	BOTTOM - BEND IN**3
NON-COM	.00	.00	.00	.00	.0	.0	.00	.0	.0	.0	.0
COM (N=N)					420630.7		66.64	14000.4		6311.7	
COM (N=3N)					308390.1		53.16	7085.6		5800.8	

(AS)C = .0 SQ. IN. , (DS)C = .0 SQ. IN. BRACE LENGTH = .00 ,YBAR = 12.50

***** INFLUENCE LINE (SIMPLE SPAN)

X-DIST (FT.)	.000	103.625	207.250	POS AREA = 5369.1
Y-ORDINATE	.000	51.813	.000	

***** ULTIMATE STRENGTH ***** MOMENT CAPACITY

	M1/M2 TOP	M1/M2 BOTTOM	TOP + BEND FT-KIPS	TOP - BEND FT-KIPS	BOTTOM + BEND FT-KIPS	BOTTOM - BEND FT-KIPS
INVENTORY	.0	.0				
OPERATING	.0					
POST VEH1	.0					
POST VEH2	.0					
POST VEH3	.0					
POST SPEC	.0					

***** ORDINATES OF AND AREAS UNDER INFLUENCE LINE (CONTINUOUS SPAN)

	SPAN	SPAN	SPAN	SPAN	SPAN	SPAN
T 0						
E 1						
N 2						
T 3						
H 4						
5						
P 6						
O 7						
I 8						
N 9						
T 0						
POS AREA	.0	.0	.0	.0	.0	.0
NEG AREA	.0	.0	.0	.0	.0	.0

AREA TOTALS .0 .0

***** DL MOMENT EFFECT

DL FT-KIPS	SDL FT-KIPS
10422.2	1532.9

***** AVAIL.CAPAC.FOR LL+IMPACT

	TOP +BEND F-KPS	TOP -BEND F-KPS	BOT +BEND F-KPS	BOT -BEND F-KPS
INVENTORY	2516.6	.0	3412.6	.0
OPERATING	4194.4	.0	5687.7	.0
VEH. 1	4194.4	.0	5687.7	.0
VEH. 2	4194.4	.0	5687.7	.0
VEH. 3	4194.4	.0	5687.7	.0
SPECIAL	.0	.0	.0	.0

***** LIVE LOAD AND RATING CALCULATIONS (IMPACT FACTOR = .150 FOR +BEND AND = .150 FOR -BEND)

LIVE LOAD		---TRUCK LOAD--- LL+IMP FT-KIPS	LL FT-KIPS	LOC.NO. 1 WHEEL FT.	DIR	AXLE SPACE FT.	---LANE LOAD--- LL+IMP FT-KIPS	LL FT-KIPS	LOC.CONC LOAD FT.	LOC.CONC LOAD 2 FT.	RATING FACT.	SAFE LOAD CAPACITY TONS	RATING VALUE
INV HS20	+BEND	4331.0	3764.5	89.625	L	.0	5483.7	4766.4	103.625		.459	16.5	HS 9.2
	-BEND	.0	.0	.000	L	.0	.0	.0	.000	.000			
OPER HS20	+BEND	4331.0	3764.5	89.625	L	.0	5483.7	4766.4	103.625		.765	27.5	HS 15.3
	-BEND	.0	.0	.000	L	.0	.0	.0	.000	.000			
POST SU2	+BEND	2113.3	1836.8	90.625	L						1.985	33.7	
	-BEND	.0	.0	.000	L								
POST SU4	+BEND	4338.3	3770.8	90.292	L						.967	33.8	
	-BEND	.0	.0	.000	L								
POST C4	+BEND	4262.2	3704.7	71.792	L						.984	36.1	
	-BEND	.0	.0	.000	L								
POST SPEC	+BEND	.0	.0	.000							.000	.0	
	-BEND	.0	.0	.000									

DETAIL DATA AT MOMENT CHECK POINT FOR
COMPOSITE STEEL AND CONCRETE FLEXURAL MEMBER

BARS RELEASE 5.5

DATE 03/11/99

D/P STRUCTURE I.D. 770-074
MEMBER I.D.--G01
C.P. LOCATION 2.00

***** SECTION PROPERTIES IN COMPOSITE RANGE 5OF SPAN 1

	H IN.	GROSS AREA SQ.IN.	---NET AREA--- + BEND SQ.IN.	- BEND SQ.IN.	IX + BEND IN**4	IX - BEND IN**4	C (BOT) IN.	SECTION MODULUS TOP + BEND IN**3	TOP - BEND IN**3	BOTTOM + BEND IN**3	BOTTOM - BEND IN**3
NON-COM	.00	.00	.00	.00	.0	.0	.00	.0	.0	.0	.0
COM (N=N)					249483.4		83.36	12517.7		2992.7	
COM (N=3N)					182007.7		69.15	5330.1		2632.2	

(AS)C = .0 SQ. IN. , (DS)C = .0 SQ. IN. BRACE LENGTH = .00 , YBAR = .70

***** INFLUENCE LINE (SIMPLE SPAN)

X-DIST (FT.)	.000	.000	207.250	POS AREA = .0
Y-ORDINATE	.000	.000	.000	

***** ORDINATES OF AND AREAS UNDER INFLUENCE LINE (CONTINUOUS SPAN)

	SPAN	SPAN	SPAN	SPAN	SPAN	SPAN
T 0						
E 1						
N 2						
T 3						
H 4						
5						
P 6						
O 7						
I 8						
N 9						
T 0						
POS AREA	.0	.0	.0	.0	.0	.0
NEG AREA	.0	.0	.0	.0	.0	.0

***** ULTIMATE STRENGTH ***** MOMENT CAPACITY

	M1/M2 TOP	M1/M2 BOTTOM	TOP + BEND FT-KIPS	TOP - BEND FT-KIPS	BOTTOM + BEND FT-KIPS	BOTTOM - BEND FT-KIPS
INVENTORY	.0	.0				
OPERATING	.0					
POST VEH1	.0					
POST VEH2	.0					
POST VEH3	.0					
POST SPEC	.0					

***** DL MOMENT EFFECT

	DL FT-KIPS	SDL FT-KIPS
AREA TOTALS	.0	.0

***** AVAIL.CAPAC.FOR LL+IMPACT

	TOP +BEND F-KPS	TOP -BEND F-KPS	BOT +BEND F-KPS	BOT -BEND F-KPS
INVENTORY	24072.4	.0	5755.2	.0
OPERATING	40120.7	.0	9592.1	.0
VEH. 1	40120.7	.0	9592.1	.0
VEH. 2	40120.7	.0	9592.1	.0
VEH. 3	40120.7	.0	9592.1	.0
SPECIAL	.0	.0	.0	.0

***** LIVE LOAD AND RATING CALCULATIONS (IMPACT FACTOR = .150 FOR +BEND AND = .150 FOR -BEND)

LIVE LOAD		---TRUCK LOAD--- LL+IMP FT-KIPS	LL FT-KIPS	LOC.NO. 1 WHEEL FT.	DIR	AXLE SPACE FT.	---LANE LOAD--- LL+IMP FT-KIPS	LL FT-KIPS	LOC.CONC LOAD FT.	LOC.CONC LOAD 2 FT.	RATING FACT.	SAFE LOAD CAPACITY TONS	RATING VALUE
INV HS20	+BEND	.0	.0	89.625	L	.0	.0	.0	.000		4.901	176.4	HS 98.0
	-BEND	.0	.0	.000	L	.0	.0	.0	.000	.000			
OPER HS20	+BEND	.0	.0	89.625	L	.0	.0	.0	.000		8.168	294.0	HS163.4
	-BEND	.0	.0	.000	L	.0	.0	.0	.000	.000			
POST SU2	+BEND	.0	.0	90.625	L						22.681	385.6	
	-BEND	.0	.0	.000	L								
POST SU4	+BEND	.0	.0	90.292	L						11.139	389.9	
	-BEND	.0	.0	.000	L								
POST C4	+BEND	.0	.0	71.792	L						10.956	401.5	
	-BEND	.0	.0	.000	L								
POST SPEC	+BEND	.0	.0	.000							.000	.0	
	-BEND	.0	.0	.000									

SUMMARY OF SHEAR ANALYSIS

DATE 03/11/99

D/P STRUCTURE I.D. 770-074

MEMB. ID	MATL	SPAN NO.	DIS FRM LT SPRT FT.	L R	DL SHEAR KIPS	SDL SHEAR KIPS	---INVENTORY--- LL+I MAX.V KIPS	T L	LL+I MIN.V KIPS	T L	---OPERATING--- LL+I MAX.V KIPS	T L	LL+I MIN.V KIPS	T L	--VEH. 1 -- LL+I MAX.V KIPS	LL+I MIN.V KIPS	--VEH. 2 -- LL+I MAX.V KIPS	LL+I MIN.V KIPS	--VEH. 3 -- LL+I MAX.V KIPS	LL+I MIN.V KIPS	--SPECIAL-- LL+I MAX.V KIPS	LL+I MIN.V KIPS
G01	CSC	1	.000	L	197.5	29.6	115.9	L	.0	T	115.9	L	.0	T	41.7	.0	85.0	.0	86.4	.0		
		1	51.813	L	101.6	14.8	79.5	L	20.7	T	79.5	L	20.7	T	34.6	10.8	70.3	21.3	70.7	19.4		
		1	103.625	L	1.0	.0	43.6	T	43.6	T	43.6	T	43.6	T	21.6	21.6	43.5	43.5	42.8	42.8		
		1	207.250	L	197.5	29.6	.0	T	130.9	L	.0	T	130.9	L	.0	47.2	.0	96.0	.0	97.6		

SUMMARY OF SHEAR ANALYSIS

DATE 03/11/99

D/P STRUCTURE I.D. 770-074

MEMB. ID	MATL	SPAN NO.	DIS FRM LT SPRT FT.	L R	DL SHEAR KIPS	SDL SHEAR KIPS	---INVENTORY--- LL+I MAX.V KIPS	T L	LL+I MIN.V KIPS	T L	---OPERATING--- LL+I MAX.V KIPS	T L	LL+I MIN.V KIPS	T L	--VEH. 1 -- LL+I MAX.V KIPS	LL+I MIN.V KIPS	--VEH. 2 -- LL+I MAX.V KIPS	LL+I MIN.V KIPS	--VEH. 3 -- LL+I MAX.V KIPS	LL+I MIN.V KIPS	--SPECIAL-- LL+I MAX.V KIPS	LL+I MIN.V KIPS
G01	CSC	1	.000	L	197.5	29.6	115.9	L	.0	T	115.9	L	.0	T	41.7	.0	85.0	.0	86.4	.0		
		1	51.813	L	101.6	14.8	79.5	L	20.7	T	79.5	L	20.7	T	34.6	10.8	70.3	21.3	70.7	19.4		
		1	103.625	L	1.0	.0	43.6	T	43.6	T	43.6	T	43.6	T	21.6	21.6	43.5	43.5	42.8	42.8		
		1	207.250	L	197.5	29.6	.0	T	130.9	L	.0	T	130.9	L	.0	47.2	.0	96.0	.0	97.6		

DETAIL DATA AT MOMENT CHECK POINT FOR BARS-PC RELEASE 5.5
COMPOSITE STEEL AND CONCRETE FLEXURAL MEMBER - LOAD FACTOR RATING

DATE 3/11/99

D/P STRUCTURE I.D. = 770-074
MEMBER I.D. -- G 1
C.P. LOCATION - 1.00

***** SECTION PROPERTIES IN COMPOSITE RANGE 1 OF SPAN 1 ******

-- STRUCTURAL STEEL PROPERTIES --

H (IN.)	Tweb (IN.)	H/Tweb	D (IN.)	D/Tweb	- B' (IN) - TOP	- B' (IN) - BOT	- B'/t - TOP	- B'/t - BOT	Lb (FT) TOP	Lb (FT) BOT	Ry (IN) TOP	Ry (IN) BOT	- Lb / Ry TOP	- Lb / Ry BOT	HYBRID RATIO, R +BEND	HYBRID RATIO, R -BEND
94.63	.63	151.40	93.00	148.80	8.61	7.38	9.84	9.84	CONT	2.13	5.15	4.44	.00	5.74	1.0000	1.0000

-- COMPOSITE CONCRETE PROPERTIES --

EFF.WIDTH (IN.)	EFF.THICK. (IN.)	VALUE N	(AS)C (SQ.IN.)	(DS)C (IN.)	VALUE a	VALUE Y	Atf (SQ.IN.)	Abf (SQ.IN.)	Aw (SQ.IN.)
96.0	8.0	8	4.65	4.00	.00	.7	15.61	11.54	62.16

-- SECTION PROPERTIES -- -------- SECTION MODULUS -------- ---- PLASTIC SECTION MODULUS ----

	GROSS AREA SQ.IN.	NET AREA +BEND SQ.IN.	NET AREA -BEND SQ.IN.	IX +BEND IN.**4	IX -BEND IN.**4	C (BOT) IN.	TOP +BEND IN.**3	TOP -BEND IN.**3	BOTT +BEND IN.**3	BOTT -BEND IN.**3	TOP +BEND IN.**3	TOP -BEND+ IN.**3	BOTT +BEND IN.**3	BOTT -BEND IN.**3
NON-COM	89.31	85.27	85.27	110480.7	110480.7	54.04	2242.9	2242.9	2044.6	2044.6	2813.82	2813.82	2813.82	2813.82
COM(N=N)				249483.4	.0	83.36	12517.7	8932.3	2992.7	2992.7				
COM(N=3N)				182007.7	.0	69.15	5330.1	4318.4	2632.2	2632.2				

-- ULTIMATE STRENGTH --

Fy (PSI) STEEL	f'c (PSI) CONC.	Fy (PSI) REBAR	2055/(SQRT Fy) TOP FLANGE	2055/(SQRT Fy) BOT FLANGE	2200/(SQRT Fy) TOP FLANGE	2200/(SQRT Fy) BOT FLANGE	-- YIELD STRESS, Fy (PSI) -- BOT FLANGE	TOP FLANGE	WEB
50000.	4500.	60000.	9.19	9.19	9.84	9.84	50000.	50000.	50000.

***** SECTION QUALIFICATION *****

	STIFFENED LONG	STIFFENED TRANV	UNSTIFFENED	COMPACT	BRACED NON-COMPACT	UNBRACED NON-COMPACT	REDUCTION FACTOR	SYMMETRICAL	UNSYMMETRICAL
+BEND		X			X		1.0000		X
-BEND							1.0000		

***** SECTION CAPACITY *****

+BEND ML = .00 FT-KIPS, MR = .00 FT-KIPS
-BEND ML = .00 FT-KIPS, MR = .00 FT-KIPS

	--- NON-COMPOSITE MOMENT CAPACITY (FT-KIPS) --- TOP +BEND	TOP -BEND	BOTT +BEND	BOTT -BEND	MU	-- COMPOSITE MOMENT CAPACITY (FT-KIPS) -- MAX. CAP. STEEL	MAX. CAP. CONC.	MU	-- SHEAR CAPACITY (KIPS) -- VU LEFT	VU RIGHT
INV.	24072.44	.00	5755.24	.00	.00	2813.82	10274.75	24072.44	1685.63	.00
OPER.	40120.74	.00	9592.06	.00	.00	2813.82	10274.75	40120.74	1685.63	.00
POST1	40120.74	.00	9592.06	.00	.00	2813.82	10274.75	40120.74	1685.63	.00
POST2	40120.74	.00	9592.06	.00	.00	2813.82	10274.75	40120.74	1685.63	.00
POST3	40120.74	.00	9592.06	.00	.00	2813.82	10274.75	40120.74	1685.63	.00

***** MOMENT (FT-KIPS) AND SHEAR (KIPS) *****

-- DEAD LOAD --

M (DL)	M (SDL)	REDIS. M-(DL)	REDIS. M-(SDL)	V (DL)	V (SDL)
.00	.00	.00	.00	197.45	29.58

DETAIL DATA AT MOMENT CHECK POINT FOR
COMPOSITE STEEL AND CONCRETE FLEXURAL MEMBER - LOAD FACTOR RATING

DATE 3/11/99

D/P STRUCTURE I.D. = 770-074
MEMBER I.D. -- G 1
C.P. LOCATION -- 1.00

***** LIVE LOAD CALCULATIONS (IMPACT FACTOR = .150 FOR +BEND AND = .150 FOR -BEND)

-- LIVE LOAD --

LIVE LOAD		TRUCK MOMENT REDIS LL+I FT-KIPS	TRUCK MOMENT LL+IMP FT-KIPS	TRUCK MOMENT LL FT-KIPS	TRUCK MOMENT LOC.NO. 1 WHEEL FT.	DIR	LANE MOMENT LL+IMP FT-KIPS	LANE MOMENT LL FT-KIPS	LANE MOMENT LOC.CONC. LOAD #1 FT.	LANE MOMENT LOC.CONC. LOAD #2 FT.	FIXED SHEAR +V KIPS	FIXED SHEAR -V KIPS	MAX SHEAR +V KIPS	MAX SHEAR -V KIPS
INV.	HS20 +BEND	.00	.0	.0	.000	L	.0	.0	.000	.000	.00	.00		
	-BEND	.00	.0	.0	.000	L	.0	.0	.000	.000	.00	.00		
													.00	115.88
OPER.	HS20 +BEND	.00	.0	.0	103.626	L	.0	.0	.000	.000	.00	.00		
	-BEND	.00	.0	.0	.000	L	.0	.0	.000	.000	.00	.00		
													.00	115.88
POST 1	SU2 +BEND	.00	.0	.0	76.628	L					.00	.00		
	-BEND	.00	.0	.0	.000	L					.00	.00		
													.00	41.73
POST 2	SU4 +BEND	.00	.0	.0	103.625	L					.00	.00		
	-BEND	.00	.0	.0	.000	L					.00	.00		
													.00	84.97
POST 3	C4 +BEND	.00	.0	.0	103.626	L					.00	.00		
	-BEND	.00	.0	.0	.000	L					.00	.00		
													.00	86.39

***** ORDINATES OF AND AREAS UNDER MOMENT INFLUENCE LINE (CONTINUOUS SPAN) *****

	SPAN 0	SPAN 1	SPAN 2	SPAN 3	SPAN 4	SPAN 5
T 0	.000	.000	.000	.000	.000	.000
E 1	.000	.000	.000	.000	.000	.000
N 2	.000	.000	.000	.000	.000	.000
T 3	.000	.000	.000	.000	.000	.000
H 4	.000	.000	.000	.000	.000	.000
5	.000	.000	.000	.000	.000	.000
P 6	.000	.000	.000	.000	.000	.000
O 7	.000	.000	.000	.000	.000	.000
I 8	.000	.000	.000	.000	.000	.000
N 9	.000	.000	.000	.000	.000	.000
T 0	.000	.000	.000	.000	.000	.000

***** MOMENT INFLUENCE LINE (SIMPLE SPAN)

X-DIST (FT.)	.00	.00	207.25	POS AREA = .00
Y-ORDINATE	.00	.00	.00	

DETAIL DATA AT MOMENT CHECK POINT FOR
COMPOSITE STEEL AND CONCRETE FLEXURAL MEMBER - LOAD FACTOR RATING

DATE 3/11/99

D/P STRUCTURE I.D. = 770-074
MEMBER I.D. -- G 1
C.P. LOCATION -- 1.00

***** RATING FACTOR *****

-- RATING FACTOR FOR MOMENT --

		AVAILABLE (LL+I) CAPACITY (FT-KIPS)				RATING FACTOR - MOMENT				RATING	SAFE
		TOP +BEND	TOP -BEND	BOTT +BEND	BOTT -BEND	TOP +BEND	TOP -BEND	BOTT +BEND	BOTT -BEND	VALUE	LOAD CAP.(TONS)
INV.	HS20	24072.4	.0	5755.2	.0	999.0000	999.0000	999.0000	999.0000		
OPER.	HS20	40120.7	.0	9592.1	.0	999.0000	999.0000	999.0000	999.0000		
POST 1	SU2	40120.7	.0	9592.1	.0	999.0000	999.0000	999.0000	999.0000		
POST 2	SU4	40120.7	.0	9592.1	.0	999.0000	999.0000	999.0000	999.0000		
POST 3	C4	40120.7	.0	9592.1	.0	999.0000	999.0000	999.0000	999.0000		

-- RATING FACTOR FOR SERVICEABILITY --

		AVAILABLE (LL+I) CAPACITY (FT-KIPS)				RATING FACTOR -SERVICEABILITY				RATING	SAFE
		TOP +BEND	TOP -BEND	BOTT +BEND	BOTT -BEND	TOP +BEND	TOP -BEND	BOTT +BEND	BOTT -BEND	VALUE	LOAD CAP.(TONS)
INV.	HS20	29729.5	.0	7107.7	.0	999.0000	999.0000	999.0000	999.0000		
OPER.	HS20	49549.1	.0	11846.2	.0	999.0000	999.0000	999.0000	999.0000		
POST 1	SU2	49549.1	.0	11846.2	.0	999.0000	999.0000	999.0000	999.0000		
POST 2	SU4	49549.1	.0	11846.2	.0	999.0000	999.0000	999.0000	999.0000		
POST 3	C4	49549.1	.0	11846.2	.0	999.0000	999.0000	999.0000	999.0000		

-- RATING FACTOR FOR SHEAR --

		AVAILABLE CAPACITY (KIPS)		RATING FACTOR - SHEAR		RATING	SAFE
		LEFT	RIGHT	LEFT	RIGHT	VALUE	LOAD
INV.	HS20	.00	641.76	5.5382	5.5382	HS110.8	199.4
OPER.	HS20	.00	1069.60	9.2303	9.2303	HS184.6	332.3
POST 1	SU2	.00	1069.60	25.6305	25.6305		435.7
POST 2	SU4	.00	1069.60	12.5874	12.5874		440.6
POST 3	C4	.00	1069.60	12.3805	12.3805		453.7

DETAIL DATA AT MOMENT CHECK POINT FOR BARS-PC RELEASE 5.5
COMPOSITE STEEL AND CONCRETE FLEXURAL MEMBER - LOAD FACTOR RATING

DATE 3/11/99

D/P STRUCTURE I.D. = 770-074
MEMBER I.D. -- G 1
C.P. LOCATION - 1.25

***** SECTION PROPERTIES IN COMPOSITE RANGE 3 OF SPAN 1 ******

-- STRUCTURAL STEEL PROPERTIES --

H (IN.)	Tweb (IN.)	H/Tweb	D (IN.)	D/Tweb	- B' (IN) - TOP	BOT	- B'/t - TOP	BOT	Lb (FT) TOP	BOT	Ry (IN) TOP	BOT	- Lb / Ry TOP	BOT	HYBRID RATIO, R +BEND	-BEND
96.69	.63	154.70	93.00	148.80	9.94	10.69	6.91	4.75	CONT	23.00	5.92	6.35	.00	43.46	1.0000	1.0000

-- COMPOSITE CONCRETE PROPERTIES --

EFF.WIDTH (IN.)	EFF.THICK. (IN.)	VALUE N	(AS)C (SQ.IN.)	(DS)C (IN.)	VALUE a	VALUE Y	Atf (SQ.IN.)	Abf (SQ.IN.)	Aw (SQ.IN.)
96.0	8.0	8	4.65	4.00	8.00	12.5	29.47	49.50	58.13

-- SECTION PROPERTIES -- -------- SECTION MODULUS -------- ---- PLASTIC SECTION MODULUS ----

	GROSS AREA SQ.IN.	NET AREA +BEND SQ.IN.	NET AREA -BEND SQ.IN.	IX +BEND IN.**4	IX -BEND IN.**4	C (BOT) IN.	TOP +BEND IN.**3	TOP -BEND IN.**3	BOTT +BEND IN.**3	BOTT -BEND IN.**3	TOP +BEND IN.**3	TOP -BEND+ IN.**3	BOTT +BEND IN.**3	BOTT -BEND IN.**3
NON-COM	137.09	137.09	137.09	213091.0	213091.0	41.70	3875.6	3875.6	5109.6	5109.6	4990.20	4990.20	4990.20	4990.20
COM(N=N)				420630.7	.0	66.64	14000.4	11056.4	6311.7	6311.7				
COM(N=3N)				308390.1	.0	53.16	7085.6	5985.4	5800.8	5800.8				

-- ULTIMATE STRENGTH --

Fy (PSI) STEEL	f'c (PSI) CONC.	Fy (PSI) REBAR	2055/(SQRT Fy) TOP FLANGE	BOT FLANGE	2200/(SQRT Fy) TOP FLANGE	BOT FLANGE	-- YIELD STRESS, Fy (PSI) -- BOT FLANGE	TOP FLANGE	WEB
50000.	4500.	60000.	9.19	9.19	9.84	9.84	50000.	50000.	50000.

***** SECTION QUALIFICATION *****

	STIFFENED LONG	STIFFENED TRANV	UNSTIFFENED	COMPACT	BRACED NON-COMPACT	UNBRACED NON-COMPACT	REDUCTION FACTOR	SYMMETRICAL	UNSYMMETRICAL
+BEND		X			X		1.0000		X
-BEND							1.0000		

***** SECTION CAPACITY *****

+BEND ML = .00 FT-KIPS, MR = .00 FT-KIPS
-BEND ML = .00 FT-KIPS, MR = .00 FT-KIPS

	--- NON-COMPOSITE MOMENT CAPACITY (FT-KIPS) --- TOP +BEND	TOP -BEND	BOTT +BEND	BOTT -BEND	MU	-- COMPOSITE MOMENT CAPACITY (FT-KIPS) -- MAX. CAP. STEEL	MAX. CAP. CONC.	MU	-- SHEAR CAPACITY (KIPS) -- VU LEFT	VU RIGHT
INV.	26923.92	.00	12137.91	.00	.00	5109.60	10124.85	26923.92	743.78	.00
OPER.	44873.20	.00	20229.85	.00	.00	5109.60	10124.85	44873.20	743.78	.00
POST1	44873.20	.00	20229.85	.00	.00	5109.60	10124.85	44873.20	743.78	.00
POST2	44873.20	.00	20229.85	.00	.00	5109.60	10124.85	44873.20	743.78	.00
POST3	44873.20	.00	20229.85	.00	.00	5109.60	10124.85	44873.20	743.78	.00

***** MOMENT (FT-KIPS) AND SHEAR (KIPS) *****

-- DEAD LOAD --

M (DL)	M (SDL)	REDIS. M-(DL)	REDIS. M-(SDL)	V (DL)	V (SDL)
7787.78	1149.65	.00	.00	101.64	14.79

DETAIL DATA AT MOMENT CHECK POINT FOR
COMPOSITE STEEL AND CONCRETE FLEXURAL MEMBER - LOAD FACTOR RATING

DATE 3/11/99

D/P STRUCTURE I.D. = 770-074
MEMBER I.D. -- G 1
C.P. LOCATION -- 1.25

***** LIVE LOAD CALCULATIONS (IMPACT FACTOR = .150 FOR +BEND AND = .150 FOR -BEND)

-- LIVE LOAD --

LIVE LOAD			TRUCK MOMENT REDIS LL+I FT-KIPS	TRUCK MOMENT LL+IMP FT-KIPS	TRUCK MOMENT LL FT-KIPS	TRUCK MOMENT LOC.NO. 1 WHEEL FT.	DIR	LANE MOMENT LL+IMP FT-KIPS	LANE MOMENT LL FT-KIPS	LANE MOMENT LOC.CONC. LOAD #1 FT.	LANE MOMENT LOC.CONC. LOAD #2 FT.	FIXED SHEAR +V KIPS	FIXED SHEAR -V KIPS	MAX SHEAR +V KIPS	MAX SHEAR -V KIPS
INV.	HS20	+BEND	.00	3301.0	2869.2	79.813	R	4112.8	3574.8	51.813	.000	58.57	35.97		
		-BEND	.00	.0	.0	.000	L	.0	.0	.000	.000	41.62	.00		
														79.50	73.02
OPER.	HS20	+BEND	.00	3301.0	2869.2	79.813	R	4112.8	3574.8	51.813	.000	58.57	35.97		
		-BEND	.00	.0	.0	.000	L	.0	.0	.000	.000	41.62	.00		
														79.50	73.02
POST 1	SU2	+BEND	.00	1609.4	1398.9	64.813	R					31.06	3.45		
		-BEND	.00	.0	.0	.000	L					1.73	.00		
														34.63	31.81
POST 2	SU4	+BEND	.00	3264.6	2837.6	69.313	R					63.01	39.54		
		-BEND	.00	.0	.0	.000	L					4.53	.00		
														70.25	64.53
POST 3	C4	+BEND	.00	3284.5	2854.9	87.813	R					63.39	35.78		
		-BEND	.00	.0	.0	.000	L					10.37	.00		
														70.68	64.92

***** ORDINATES OF AND AREAS UNDER MOMENT INFLUENCE LINE (CONTINUOUS SPAN) *****

	SPAN 0	SPAN 1	SPAN 2	SPAN 3	SPAN 4	SPAN 5
T 0	.000	.000	.000	.000	.000	.000
E 1	.000	.000	.000	.000	.000	.000
N 2	.000	.000	.000	.000	.000	.000
T 3	.000	.000	.000	.000	.000	.000
H 4	.000	.000	.000	.000	.000	.000
5	.000	.000	.000	.000	.000	.000
P 6	.000	.000	.000	.000	.000	.000
O 7	.000	.000	.000	.000	.000	.000
I 8	.000	.000	.000	.000	.000	.000
N 9	.000	.000	.000	.000	.000	.000
T 0	.000	.000	.000	.000	.000	.000

***** MOMENT INFLUENCE LINE (SIMPLE SPAN)

X-DIST (FT.)	.00	51.81	207.25	POS AREA = 4026.80
Y-ORDINATE	.00	38.86	.00	

DETAIL DATA AT MOMENT CHECK POINT FOR
COMPOSITE STEEL AND CONCRETE FLEXURAL MEMBER - LOAD FACTOR RATING

DATE 3/11/99

D/P STRUCTURE I.D. = 770-074
MEMBER I.D. -- G 1
C.P. LOCATION -- 1.25

***** RATING FACTOR *****

-- RATING FACTOR FOR MOMENT --

		AVAILABLE (LL+I) CAPACITY (FT-KIPS)				RATING FACTOR - MOMENT				RATING	SAFE
		TOP +BEND	TOP -BEND	BOTT +BEND	BOTT -BEND	TOP +BEND	TOP -BEND	BOTT +BEND	BOTT -BEND	VALUE	LOAD CAP.(TONS)
INV.	HS20	8681.1	.0	5615.4	.0	2.1108	999.0000	1.3654	999.0000	HS 27.3	49.2
OPER.	HS20	14468.4	.0	9359.0	.0	3.5179	999.0000	2.2756	999.0000	HS 45.5	81.9
POST 1	SU2	111111.0	.0	9359.0	.0	7.5636	999.0000	5.8151	999.0000		98.9
POST 2	SU4	111111.0	.0	9359.0	.0	3.7908	999.0000	2.8668	999.0000		100.3
POST 3	C4	111111.0	.0	9359.0	.0	3.9496	999.0000	2.8494	999.0000		104.4

-- RATING FACTOR FOR SERVICEABILITY --

		AVAILABLE (LL+I) CAPACITY (FT-KIPS)				RATING FACTOR -SERVICEABILITY				RATING	SAFE
		TOP +BEND	TOP -BEND	BOTT +BEND	BOTT -BEND	TOP +BEND	TOP -BEND	BOTT +BEND	BOTT -BEND	VALUE	LOAD CAP.(TONS)
INV.	HS20	15008.2	.0	8467.8	.0	3.6492	999.0000	2.0589	999.0000		
OPER.	HS20	25013.6	.0	14113.0	.0	6.0820	999.0000	3.4315	999.0000		
POST 1	SU2	25013.6	.0	14113.0	.0	15.5420	999.0000	8.7690	999.0000		
POST 2	SU4	25013.6	.0	14113.0	.0	7.6621	999.0000	4.3230	999.0000		
POST 3	C4	25013.6	.0	14113.0	.0	7.6156	999.0000	4.2968	999.0000		

-- RATING FACTOR FOR SHEAR --

		AVAILABLE CAPACITY (KIPS)		RATING FACTOR - SHEAR		RATING	SAFE
		LEFT	RIGHT	LEFT	RIGHT	VALUE	LOAD
INV.	HS20	273.42	273.42	3.4393	3.4393		
OPER.	HS20	455.70	455.70	5.7321	5.7321		
POST 1	SU2	455.70	455.70	13.1575	13.1575		
POST 2	SU4	455.70	455.70	6.4865	6.4865		
POST 3	C4	455.70	455.70	6.4472	6.4472		

DETAIL DATA AT MOMENT CHECK POINT FOR BARS-PC RELEASE 5.5
COMPOSITE STEEL AND CONCRETE FLEXURAL MEMBER - LOAD FACTOR RATING

DATE 3/11/99

D/P STRUCTURE I.D. = 770-074
MEMBER I.D. -- G 1
C.P. LOCATION - 1.50

***** SECTION PROPERTIES IN COMPOSITE RANGE 3 OF SPAN 1 ******

-- STRUCTURAL STEEL PROPERTIES --

H (IN.)	Tweb (IN.)	H/Tweb	D (IN.)	D/Tweb	- B' (IN) - TOP	BOT	- B'/t - TOP	BOT	Lb (FT) TOP	BOT	Ry (IN) TOP	BOT	- Lb / Ry TOP	BOT	HYBRID RATIO, R +BEND	-BEND
96.69	.63	154.70	93.00	148.80	9.94	10.69	6.91	4.75	CONT	23.25	5.92	6.35	.00	43.93	1.0000	1.0000

-- COMPOSITE CONCRETE PROPERTIES --

EFF.WIDTH (IN.)	EFF.THICK. (IN.)	VALUE N	(AS)C (SQ.IN.)	(DS)C (IN.)	VALUE a	VALUE Y	Atf (SQ.IN.)	Abf (SQ.IN.)	Aw (SQ.IN.)
96.0	8.0	8	4.65	4.00	8.00	12.5	29.47	49.50	58.13

-- SECTION PROPERTIES -- -------- SECTION MODULUS -------- ---- PLASTIC SECTION MODULUS ----

	GROSS AREA SQ.IN.	NET AREA +BEND SQ.IN.	NET AREA -BEND SQ.IN.	IX +BEND IN.**4	IX -BEND IN.**4	C (BOT) IN.	TOP +BEND IN.**3	TOP -BEND IN.**3	BOTT +BEND IN.**3	BOTT -BEND IN.**3	TOP +BEND IN.**3	TOP -BEND+ IN.**3	BOTT +BEND IN.**3	BOTT -BEND IN.**3
NON-COM	137.09	137.09	137.09	213091.0	213091.0	41.70	3875.6	3875.6	5109.6	5109.6	4990.20	4990.20	4990.20	4990.20
COM(N=N)				420630.7	.0	66.64	14000.4	11056.4	6311.7	6311.7				
COM(N=3N)				308390.1	.0	53.16	7085.6	5985.4	5800.8	5800.8				

-- ULTIMATE STRENGTH --

Fy (PSI) STEEL	f'c (PSI) CONC.	Fy (PSI) REBAR	2055/(SQRT Fy) TOP FLANGE	BOT FLANGE	2200/(SQRT Fy) TOP FLANGE	BOT FLANGE	-- YIELD STRESS, Fy (PSI) -- BOT FLANGE	TOP FLANGE	WEB
50000.	4500.	60000.	9.19	9.19	9.84	9.84	50000.	50000.	50000.

***** SECTION QUALIFICATION *****

	STIFFENED LONG	STIFFENED TRANV	UNSTIFFENED	COMPACT	BRACED NON-COMPACT	UNBRACED NON-COMPACT	REDUCTION FACTOR	SYMMETRICAL	UNSYMMETRICAL
+BEND		X			X		1.0000		X
-BEND							1.0000		

***** SECTION CAPACITY *****

+BEND ML = .00 FT-KIPS, MR = .00 FT-KIPS
-BEND ML = .00 FT-KIPS, MR = .00 FT-KIPS

	--- NON-COMPOSITE MOMENT CAPACITY (FT-KIPS) --- TOP +BEND	TOP -BEND	BOTT +BEND	BOTT -BEND	MU	-- COMPOSITE MOMENT CAPACITY (FT-KIPS) -- MAX. CAP. STEEL	MAX. CAP. CONC.	MU	-- SHEAR CAPACITY (KIPS) -- VU LEFT	VU RIGHT
INV.	26923.92	.00	12137.91	.00	.00	5109.60	10124.85	26923.92	739.67	.00
OPER.	44873.20	.00	20229.85	.00	.00	5109.60	10124.85	44873.20	739.67	.00
POST1	44873.20	.00	20229.85	.00	.00	5109.60	10124.85	44873.20	739.67	.00
POST2	44873.20	.00	20229.85	.00	.00	5109.60	10124.85	44873.20	739.67	.00
POST3	44873.20	.00	20229.85	.00	.00	5109.60	10124.85	44873.20	739.67	.00

***** MOMENT (FT-KIPS) AND SHEAR (KIPS) *****

-- DEAD LOAD --

M (DL)	M (SDL)	REDIS. M-(DL)	REDIS. M-(SDL)	V (DL)	V (SDL)
10422.24	1532.87	.00	.00	1.04	.00

10529.7 1186.6

From Design P II-85 - II-85

MU IS NOT CORRECT. BECAUSE THE BARS PROGRAM CALCULATE WITHOUT USING COMPACT. CRITERIOR.

DETAIL DATA AT MOMENT CHECK POINT FOR
COMPOSITE STEEL AND CONCRETE FLEXURAL MEMBER - LOAD FACTOR RATING

DATE 3/11/99

D/P STRUCTURE I.D. = 770-074
MEMBER I.D. -- G 1
C.P. LOCATION -- 1.50

***** LIVE LOAD CALCULATIONS (IMPACT FACTOR = .150 FOR +BEND AND = .150 FOR -BEND)

-- LIVE LOAD --

	LIVE LOAD		TRUCK MOMENT REDIS LL+I FT-KIPS	TRUCK MOMENT LL+IMP FT-KIPS	TRUCK MOMENT LL FT-KIPS	TRUCK MOMENT LOC.NO. 1 WHEEL FT.	DIR	LANE MOMENT LL+IMP FT-KIPS	LANE MOMENT LL FT-KIPS	LANE MOMENT LOC.CONC. LOAD #1 FT.	LANE MOMENT LOC.CONC. LOAD #2 FT.	FIXED SHEAR +V KIPS	FIXED SHEAR -V KIPS	MAX SHEAR +V KIPS	MAX SHEAR -V KIPS
INV.	HS20	+BEND	.00	4331.0	3764.5	89.625	L	5483.7	4766.4	103.625	.000	11.30	11.30		
		-BEND	.00	.0	.0	.000	L	.0	.0	.000	.000	.00	.00		
														43.55	43.55
OPER.	HS20	+BEND	.00	4331.0	3764.5	89.625	L	5483.7	4766.4	103.625	.000	11.30	11.30		
		-BEND	.00	.0	.0	.000	L	.0	.0	.000	.000	.00	.00		
														43.55	43.55
POST 1	SU2	+BEND	.00	2113.3	1836.8	90.625	L					7.22	-20.39		
		-BEND	.00	.0	.0	.000	L					1.73	.00		
														21.60	21.60
POST 2	SU4	+BEND	.00	4338.3	3770.8	90.292	L					4.13	-19.34		
		-BEND	.00	.0	.0	.000	L					4.53	.00		
														43.48	43.48
POST 3	C4	+BEND	.00	4262.2	3704.7	71.792	L					12.99	-14.63		
		-BEND	.00	.0	.0	.000	L					10.37	.00		
														42.79	42.79

***** ORDINATES OF AND AREAS UNDER MOMENT INFLUENCE LINE (CONTINUOUS SPAN) *****

	SPAN 0	SPAN 1	SPAN 2	SPAN 3	SPAN 4	SPAN 5
T 0	.000	.000	.000	.000	.000	.000
E 1	.000	.000	.000	.000	.000	.000
N 2	.000	.000	.000	.000	.000	.000
T 3	.000	.000	.000	.000	.000	.000
H 4	.000	.000	.000	.000	.000	.000
5	.000	.000	.000	.000	.000	.000
P 6	.000	.000	.000	.000	.000	.000
O 7	.000	.000	.000	.000	.000	.000
I 8	.000	.000	.000	.000	.000	.000
N 9	.000	.000	.000	.000	.000	.000
T 0	.000	.000	.000	.000	.000	.000

***** MOMENT INFLUENCE LINE (SIMPLE SPAN)

X-DIST (FT.)	.00	103.63	207.25	POS AREA = 5369.07
Y-ORDINATE	.00	51.81	.00	

DETAIL DATA AT MOMENT CHECK POINT FOR
COMPOSITE STEEL AND CONCRETE FLEXURAL MEMBER - LOAD FACTOR RATING

DATE 3/11/99

D/P STRUCTURE I.D. = 770-074
MEMBER I.D. -- G 1
C.P. LOCATION -- 1.50

***** RATING FACTOR *****

-- RATING FACTOR FOR MOMENT --

		AVAILABLE (LL+I) CAPACITY (FT-KIPS)				RATING FACTOR - MOMENT				RATING VALUE	SAFE LOAD CAP. (TONS)
		TOP +BEND	TOP -BEND	BOTT +BEND	BOTT -BEND	TOP +BEND	TOP -BEND	BOTT +BEND	BOTT -BEND		
INV.	HS20	2516.6	.0	3412.6	.0	.4589	999.0000	.6223	999.0000	HS 9.2	16.5
OPER.	HS20	4194.4	.0	5687.7	.0	.7649	999.0000	1.0372	999.0000	HS 15.3	27.5
POST 1	SU2	4194.4	.0	5687.7	.0	1.9848	999.0000	2.6914	999.0000		33.7
POST 2	SU4	4194.4	.0	5687.7	.0	.9668	999.0000	1.3111	999.0000		33.8
POST 3	C4	4194.4	.0	5687.7	.0	.9841	999.0000	1.3345	999.0000		36.1

-- RATING FACTOR FOR SERVICEABILITY --

		AVAILABLE (LL+I) CAPACITY (FT-KIPS)				RATING FACTOR -SERVICEABILITY				RATING VALUE	SAFE LOAD CAP. (TONS)
		TOP +BEND	TOP -BEND	BOTT +BEND	BOTT -BEND	TOP +BEND	TOP -BEND	BOTT +BEND	BOTT -BEND		
INV.	HS20	8843.7	.0	6265.0	.0	1.6127	999.0000	1.1425	999.0000		
OPER.	HS20	14739.6	.0	10441.7	.0	2.6879	999.0000	1.9041	999.0000		
POST 1	SU2	14739.6	.0	10441.7	.0	6.9748	999.0000	4.9411	999.0000		
POST 2	SU4	14739.6	.0	10441.7	.0	3.3976	999.0000	2.4069	999.0000		
POST 3	C4	14739.6	.0	10441.7	.0	3.4582	999.0000	2.4499	999.0000		

-- RATING FACTOR FOR SHEAR --

		AVAILABLE CAPACITY (KIPS)		RATING FACTOR - SHEAR		RATING VALUE	SAFE LOAD
		LEFT	RIGHT	LEFT	RIGHT		
INV.	HS20	340.76	340.76	7.8238	7.8238		
OPER.	HS20	567.94	567.94	13.0397	13.0397		
POST 1	SU2	567.94	567.94	26.2904	26.2904		
POST 2	SU4	567.94	567.94	13.0632	13.0632		
POST 3	C4	567.94	567.94	13.2738	13.2738		

DETAIL DATA AT MOMENT CHECK POINT FOR BARS-PC RELEASE 5.5
COMPOSITE STEEL AND CONCRETE FLEXURAL MEMBER - LOAD FACTOR RATING

DATE 3/11/99

D/P STRUCTURE I.D. = 770-074
MEMBER I.D. -- G 1
C.P. LOCATION - 2.00

***** SECTION PROPERTIES IN COMPOSITE RANGE 5 OF SPAN 1 ******

-- STRUCTURAL STEEL PROPERTIES --

H (IN.)	Tweb (IN.)	H/Tweb	D (IN.)	D/Tweb	- B' (IN) - TOP	BOT	- B'/t - TOP	BOT	Lb (FT) TOP	BOT	Ry (IN) TOP	BOT	- Lb / Ry TOP	BOT	HYBRID RATIO, R +BEND	-BEND
94.63	.63	151.40	93.00	148.80	8.61	7.38	9.84	9.84	CONT	2.13	5.15	4.44	.00	5.74	1.0000	1.0000

-- COMPOSITE CONCRETE PROPERTIES --

EFF.WIDTH (IN.)	EFF.THICK. (IN.)	VALUE N	(AS)C (SQ.IN.)	(DS)C (IN.)	VALUE a	VALUE Y	Atf (SQ.IN.)	Abf (SQ.IN.)	Aw (SQ.IN.)
96.0	8.0	8	4.65	4.00	.00	.7	15.61	11.54	62.16

-- SECTION PROPERTIES -- -------- SECTION MODULUS -------- ---- PLASTIC SECTION MODULUS ----

	GROSS AREA SQ.IN.	NET AREA +BEND SQ.IN.	NET AREA -BEND SQ.IN.	IX +BEND IN.**4	IX -BEND IN.**4	C (BOT) IN.	TOP +BEND IN.**3	TOP -BEND IN.**3	BOTT +BEND IN.**3	BOTT -BEND IN.**3	TOP +BEND IN.**3	TOP -BEND+ IN.**3	BOTT +BEND IN.**3	BOTT -BEND IN.**3
NON-COM	89.31	85.27	85.27	110480.7	110480.7	54.04	2242.9	2242.9	2044.6	2044.6	2813.82	2813.82	2813.82	2813.82
COM(N=N)				249483.4	.0	83.36	12517.7	8932.3	2992.7	2992.7				
COM(N=3N)				182007.7	.0	69.15	5330.1	4318.4	2632.2	2632.2				

-- ULTIMATE STRENGTH --

Fy (PSI) STEEL	f'c (PSI) CONC.	Fy (PSI) REBAR	2055/(SQRT Fy) TOP FLANGE	BOT FLANGE	2200/(SQRT Fy) TOP FLANGE	BOT FLANGE	-- YIELD STRESS, Fy (PSI) -- BOT FLANGE	TOP FLANGE	WEB
50000.	4500.	60000.	9.19	9.19	9.84	9.84	50000.	50000.	50000.

***** SECTION QUALIFICATION *****

	STIFFENED LONG	STIFFENED TRANV	UNSTIFFENED	COMPACT	BRACED NON-COMPACT	UNBRACED NON-COMPACT	REDUCTION FACTOR	SYMMETRICAL	UNSYMMETRICAL
+BEND		X			X		1.0000		X
-BEND							1.0000		

***** SECTION CAPACITY *****

+BEND ML = .00 FT-KIPS, MR = .00 FT-KIPS
-BEND ML = .00 FT-KIPS, MR = .00 FT-KIPS

	--- NON-COMPOSITE MOMENT CAPACITY (FT-KIPS) --- TOP +BEND	TOP -BEND	BOTT +BEND	BOTT -BEND	MU	-- COMPOSITE MOMENT CAPACITY (FT-KIPS) -- MAX. CAP. STEEL	MAX. CAP. CONC.	MU	-- SHEAR CAPACITY (KIPS) -- VU LEFT	VU RIGHT
INV.	24072.44	.00	5755.24	.00	.00	2813.82	10274.75	24072.44	1685.63	.00
OPER.	40120.74	.00	9592.06	.00	.00	2813.82	10274.75	40120.74	1685.63	.00
POST1	40120.74	.00	9592.06	.00	.00	2813.82	10274.75	40120.74	1685.63	.00
POST2	40120.74	.00	9592.06	.00	.00	2813.82	10274.75	40120.74	1685.63	.00
POST3	40120.74	.00	9592.06	.00	.00	2813.82	10274.75	40120.74	1685.63	.00

***** MOMENT (FT-KIPS) AND SHEAR (KIPS) *****

-- DEAD LOAD --

M (DL)	M (SDL)	REDIS. M-(DL)	REDIS. M-(SDL)	V (DL)	V (SDL)
.00	.00	.00	.00	-197.55	-29.58

DETAIL DATA AT MOMENT CHECK POINT FOR
COMPOSITE STEEL AND CONCRETE FLEXURAL MEMBER - LOAD FACTOR RATING

DATE 3/11/99

D/P STRUCTURE I.D. = 770-074
MEMBER I.D. -- G 1
C.P. LOCATION -- 2.00

***** LIVE LOAD CALCULATIONS (IMPACT FACTOR = .150 FOR +BEND AND = .150 FOR -BEND)

-- LIVE LOAD --

LIVE LOAD			TRUCK MOMENT REDIS LL+I FT-KIPS	TRUCK MOMENT LL+IMP FT-KIPS	TRUCK MOMENT LL FT-KIPS	TRUCK MOMENT LOC.NO. 1 WHEEL FT.	TRUCK MOMENT DIR	LANE MOMENT LL+IMP FT-KIPS	LANE MOMENT LL FT-KIPS	LANE MOMENT LOC.CONC. LOAD #1 FT.	LANE MOMENT LOC.CONC. LOAD #2 FT.	FIXED SHEAR +V KIPS	FIXED SHEAR -V KIPS	MAX SHEAR +V KIPS	MAX SHEAR -V KIPS
INV.	HS20	+BEND	.00	.0	.0	89.625	L	.0	.0	.000	.000	47.22	47.22		
		-BEND	.00	.0	.0	.000	L	.0	.0	.000	.000	18.18	.00		
														115.88	130.94
OPER.	HS20	+BEND	.00	.0	.0	89.625	L	.0	.0	.000	.000	47.22	47.22		
		-BEND	.00	.0	.0	.000	L	.0	.0	.000	.000	18.18	.00		
														115.88	130.94
POST 1	SU2	+BEND	.00	.0	.0	90.625	L					-20.39	-20.39		
		-BEND	.00	.0	.0	.000	L					16.79	.00		
														41.73	47.15
POST 2	SU4	+BEND	.00	.0	.0	90.292	L					-42.81	-42.81		
		-BEND	.00	.0	.0	.000	L					21.98	.00		
														84.97	96.02
POST 3	C4	+BEND	.00	.0	.0	71.792	L					-42.24	-42.24		
		-BEND	.00	.0	.0	.000	L					19.53	.00		
														86.39	97.62

***** ORDINATES OF AND AREAS UNDER MOMENT INFLUENCE LINE (CONTINUOUS SPAN) *****

	SPAN 0	SPAN 1	SPAN 2	SPAN 3	SPAN 4	SPAN 5
T 0	.000	.000	.000	.000	.000	.000
E 1	.000	.000	.000	.000	.000	.000
N 2	.000	.000	.000	.000	.000	.000
T 3	.000	.000	.000	.000	.000	.000
H 4	.000	.000	.000	.000	.000	.000
5	.000	.000	.000	.000	.000	.000
P 6	.000	.000	.000	.000	.000	.000
O 7	.000	.000	.000	.000	.000	.000
I 8	.000	.000	.000	.000	.000	.000
N 9	.000	.000	.000	.000	.000	.000
T 0	.000	.000	.000	.000	.000	.000

***** MOMENT INFLUENCE LINE (SIMPLE SPAN)

X-DIST (FT.)	.00	207.25	207.25	POS AREA = .00
Y-ORDINATE	.00	.00	.00	

DETAIL DATA AT MOMENT CHECK POINT FOR
COMPOSITE STEEL AND CONCRETE FLEXURAL MEMBER - LOAD FACTOR RATING

DATE 3/11/99

D/P STRUCTURE I.D. = 770-074
MEMBER I.D. -- G 1
C.P. LOCATION -- 2.00

***** RATING FACTOR *****

-- RATING FACTOR FOR MOMENT --

		AVAILABLE (LL+I) CAPACITY (FT-KIPS)				RATING FACTOR - MOMENT				RATING	SAFE
		TOP +BEND	TOP -BEND	BOTT +BEND	BOTT -BEND	TOP +BEND	TOP -BEND	BOTT +BEND	BOTT -BEND	VALUE	LOAD CAP.(TONS)
INV.	HS20	24072.4	.0	5755.2	.0	999.0000	999.0000	999.0000	999.0000		
OPER.	HS20	40120.7	.0	9592.1	.0	999.0000	999.0000	999.0000	999.0000		
POST 1	SU2	40120.7	.0	9592.1	.0	999.0000	999.0000	999.0000	999.0000		
POST 2	SU4	40120.7	.0	9592.1	.0	999.0000	999.0000	999.0000	999.0000		
POST 3	C4	40120.7	.0	9592.1	.0	999.0000	999.0000	999.0000	999.0000		

-- RATING FACTOR FOR SERVICEABILITY --

		AVAILABLE (LL+I) CAPACITY (FT-KIPS)				RATING FACTOR -SERVICEABILITY				RATING	SAFE
		TOP +BEND	TOP -BEND	BOTT +BEND	BOTT -BEND	TOP +BEND	TOP -BEND	BOTT +BEND	BOTT -BEND	VALUE	LOAD CAP.(TONS)
INV.	HS20	29729.5	.0	7107.7	.0	999.0000	999.0000	999.0000	999.0000		
OPER.	HS20	49549.1	.0	11846.2	.0	999.0000	999.0000	999.0000	999.0000		
POST 1	SU2	49549.1	.0	11846.2	.0	999.0000	999.0000	999.0000	999.0000		
POST 2	SU4	49549.1	.0	11846.2	.0	999.0000	999.0000	999.0000	999.0000		
POST 3	C4	49549.1	.0	11846.2	.0	999.0000	999.0000	999.0000	999.0000		

-- RATING FACTOR FOR SHEAR --

		AVAILABLE CAPACITY (KIPS)		RATING FACTOR - SHEAR		RATING	SAFE
		LEFT	RIGHT	LEFT	RIGHT	VALUE	LOAD
INV.	HS20	641.70	.00	4.9008	4.9008	HS 98.0	176.4
OPER.	HS20	1069.50	.00	8.1680	8.1680	HS163.4	294.0
POST 1	SU2	1069.50	.00	22.6807	22.6807		385.6
POST 2	SU4	1069.50	.00	11.1387	11.1387		389.9
POST 3	C4	1069.50	.00	10.9556	10.9556		401.5

SUMMARY OF SHEAR ANALYSIS

DATE 3/11/99

D/P STRUCTURE I.D. 770-074

MEMB. ID	MATL	SPAN NO.	DIS FRM LT SPRT FT.	L R	DL SHEAR KIPS	SDL SHEAR KIPS	---INVENTORY---- LL+I MAX.V KIPS	T L	LL+I MIN.V KIPS	T L	---OPERATING---- LL+I MAX.V KIPS	T L	LL+I MIN.V KIPS	T L	--VEH. 1 -- LL+I MAX.V KIPS	LL+I MIN.V KIPS	--VEH. 2 -- LL+I MAX.V KIPS	LL+I MIN.V KIPS	--VEH. 3 -- LL+I MAX.V KIPS	LL+I MIN.V KIPS	--SPECIAL--- LL+I MAX.V KIPS	LL+I MIN.V KIPS
G 1	CSC	1	.000	L	197.5	29.6	115.9	L	.0	T	115.9	L	.0	T	41.7	.0	85.0	.0	86.4	.0	.0	.0
		1	51.813	L	101.6	14.8	79.5	L	20.7	T	79.5	L	20.7	T	34.6	10.8	70.3	21.3	70.7	19.4	.0	.0
		1	103.625	L	1.0	.0	43.6	T	43.6	T	43.6	T	43.6	T	21.6	21.6	43.5	43.5	42.8	42.8	.0	.0
		1	207.250	L	197.5	29.6	.0	T	130.9	L	.0	T	130.9	L	.0	47.2	.0	96.0	.0	97.6	.0	.0

LIVE LOAD DATA AT MOMENT CHECK POINT FOR
COMPOSITE STEEL AND CONCRETE FLEXURAL MEMBER - LOAD FACTOR RATING

DATE 3/11/99

D/P STRUCTURE I.D. = 770-074
MEMBER I.D. -- G 1
C.P. LOCATION -- 1.00

***** LIVE LOAD CALCULATIONS (IMPACT FACTOR = .150 FOR +BEND AND = .150 FOR -BEND)

LIVE LOAD		-- LIVE LOAD -- TRUCK MOMENT REDIS LL+I FT-KIPS	LL+IMP FT-KIPS	LL FT-KIPS	LOC.NO. 1 WHEEL FT.	DIR	LANE MOMENT LL+IMP FT-KIPS	LL FT-KIPS	LOC.CONC. LOAD #1 FT.	LOC.CONC. LOAD #2 FT.	FIXED SHEAR +V KIPS	-V KIPS	SHEAR LEFT KIPS	RIGHT KIPS
INV. HS20	+BEND	.00	.0	.0	.000	L	.0	.0	.000	.000	.00	.00	.00	115.88
	-BEND	.00	.0	.0	.000	L	.0	.0	.000	.000	.00	.00		
OPER HS20	+BEND	.00	.0	.0	103.626	L	.0	.0	.000	.000	.00	.00	.00	115.88
	-BEND	.00	.0	.0	.000	L	.0	.0	.000	.000	.00	.00		
OPER 2 ST5	+BEND	.00	.0	.0	103.626		.0	.0	.000	.000	.00	.00	.00	85.74
	-BEND	.00	.0	.0	.000		.0	.0	.000	.000	.00	.00		
POST 1 SU2	+BEND	.00	.0	.0	76.628	L					.00	.00	.00	41.73
	-BEND	.00	.0	.0	.000	L					.00	.00		
POST 4 SU3	+BEND	.00	.0	.0	103.625						.00	.00	.00	80.27
	-BEND	.00	.0	.0	.000						.00	.00		
POST 2 SU4	+BEND	.00	.0	.0	103.625	L					.00	.00	.00	84.97
	-BEND	.00	.0	.0	.000	L					.00	.00		
POST 5 C3	+BEND	.00	.0	.0	103.625						.00	.00	.00	65.45
	-BEND	.00	.0	.0	.000						.00	.00		
POST 3 C4	+BEND	.00	.0	.0	103.626	L					.00	.00	.00	86.39
	-BEND	.00	.0	.0	.000	L					.00	.00		
POST 6 C5	+BEND	.00	.0	.0	103.626						.00	.00	.00	94.06
	-BEND	.00	.0	.0	.000						.00	.00		

LIVE LOAD DATA AT MOMENT CHECK POINT FOR
COMPOSITE STEEL AND CONCRETE FLEXURAL MEMBER - LOAD FACTOR RATING

DATE 3/11/99

D/P STRUCTURE I.D. = 770-074
MEMBER I.D. -- G 1
C.P. LOCATION -- 1.00

***** RATING FACTOR *****

		-- RATING FACTOR FOR -- MOMENT				-- RATING FACTOR FOR -- SERVICEABILITY				-- RATING FACTOR FOR -- SHEAR		RATING VALUE	SAFE LOAD CAP. (TONS)
		TOP		BOTT		TOP		BOTT		LEFT	RIGHT		
		+BEND	-BEND	+BEND	-BEND	+BEND	-BEND	+BEND	-BEND				
INV.	HS20	999.000	999.000	999.000	999.000	999.000	999.000	999.000	999.000	5.538	5.538	HS110.8	199.4
OPER	HS20	999.000	999.000	999.000	999.000	999.000	999.000	999.000	999.000	9.230	9.230	HS184.6	332.3
OPER 2	ST5	999.000	999.000	999.000	999.000	999.000	999.000	999.000	999.000	999.000	12.475	.0	499.0
POST 1	SU2	999.000	999.000	999.000	999.000	999.000	999.000	999.000	999.000	25.630	25.630		435.7
POST 4	SU3	999.000	999.000	999.000	999.000	999.000	999.000	999.000	999.000	999.000	13.326		439.7
POST 2	SU4	999.000	999.000	999.000	999.000	999.000	999.000	999.000	999.000	12.587	12.587		440.6
POST 5	C3	999.000	999.000	999.000	999.000	999.000	999.000	999.000	999.000	999.000	16.343		457.6
POST 3	C4	999.000	999.000	999.000	999.000	999.000	999.000	999.000	999.000	12.380	12.380		453.7
POST 6	C5	999.000	999.000	999.000	999.000	999.000	999.000	999.000	999.000	999.000	11.371		454.9

LIVE LOAD DATA AT MOMENT CHECK POINT FOR
COMPOSITE STEEL AND CONCRETE FLEXURAL MEMBER - LOAD FACTOR RATING

DATE 3/11/99

D/P STRUCTURE I.D. = 770-074
MEMBER I.D. -- G 1
C.P. LOCATION -- 1.25

***** LIVE LOAD CALCULATIONS (IMPACT FACTOR = .150 FOR +BEND AND = .150 FOR -BEND)

-- LIVE LOAD --

LIVE LOAD			TRUCK MOMENT REDIS LL+I FT-KIPS	TRUCK MOMENT LL+IMP FT-KIPS	TRUCK MOMENT LL FT-KIPS	TRUCK MOMENT LOC.NO. 1 WHEEL FT.	DIR	LANE MOMENT LL+IMP FT-KIPS	LANE MOMENT LL FT-KIPS	LANE MOMENT LOC.CONC. LOAD #1 FT.	LANE MOMENT LOC.CONC. LOAD #2 FT.	FIXED SHEAR +V KIPS	FIXED SHEAR -V KIPS	SHEAR LEFT KIPS	SHEAR RIGHT KIPS
INV.	HS20	+BEND	.00	3301.0	2869.2	79.813	R	4112.8	3574.8	51.813	.000	58.57	35.97	79.50	73.02
		-BEND	.00	.0	.0	.000	L	.0	.0	.000	.000	41.62	.00		
OPER	HS20	+BEND	.00	3301.0	2869.2	79.813	R	4112.8	3574.8	51.813	.000	58.57	35.97	79.50	73.02
		-BEND	.00	.0	.0	.000	L	.0	.0	.000	.000	41.62	.00		
OPER 2	ST5	+BEND	.00	3359.8	2920.3	24.813		.0	.0	.000	.000	60.04	37.44	68.20	62.64
		-BEND	.00	.0	.0	.000		.0	.0	.000	.000	4.28	.00		
POST 1	SU2	+BEND	.00	1609.4	1398.9	64.813	R					31.06	3.45	34.63	31.81
		-BEND	.00	.0	.0	.000	L					-1.73	.00		
POST 4	SU3	+BEND	.00	3085.7	2682.1	66.979						59.56	31.94	66.40	60.99
		-BEND	.00	.0	.0	.000						-3.49	.00		
POST 2	SU4	+BEND	.00	3264.6	2837.6	69.313	R					63.01	39.54	70.25	64.53
		-BEND	.00	.0	.0	.000	L					-4.53	.00		
POST 5	C3	+BEND	.00	2480.4	2156.0	41.813						35.72	8.10	53.38	49.03
		-BEND	.00	.0	.0	.000						-5.33	.00		
POST 3	C4	+BEND	.00	3284.5	2854.9	87.813	R					63.39	35.78	70.68	64.92
		-BEND	.00	.0	.0	.000	L					-10.37	.00		
POST 6	C5	+BEND	.00	3572.8	3105.4	87.813						68.96	41.34	76.89	70.62
		-BEND	.00	.0	.0	.000						-11.09	.00		

LIVE LOAD DATA AT MOMENT CHECK POINT FOR
COMPOSITE STEEL AND CONCRETE FLEXURAL MEMBER - LOAD FACTOR RATING

DATE 3/11/99

D/P STRUCTURE I.D. = 770-074
MEMBER I.D. -- G 1
C.P. LOCATION -- 1.25

***** RATING FACTOR *****

		-- RATING FACTOR FOR -- MOMENT				-- RATING FACTOR FOR -- SERVICEABILITY				-- RATING FACTOR FOR -- SHEAR		RATING VALUE	SAFE LOAD CAP. (TONS)
		TOP		BOTT		TOP		BOTT		LEFT	RIGHT		
		+BEND	-BEND	+BEND	-BEND	+BEND	-BEND	+BEND	-BEND				
INV.	HS20	2.111	999.000	1.365	999.000	3.649	999.000	2.059	999.000	3.439	3.439	HS 27.3	49.2
OPER	HS20	3.518	999.000	2.276	999.000	6.082	999.000	3.432	999.000	5.732	5.732	HS 45.5	81.9
OPER 2	ST5	4.060	999.000	2.786	999.000	7.445	999.000	4.201	999.000	6.682	6.682	.0	111.4
POST 1	SU2	7.564	999.000	5.815	999.000	15.542	999.000	8.769	999.000	13.158	13.158		98.9
POST 4	SU3	4.166	999.000	3.033	999.000	8.106	999.000	4.574	999.000	6.863	6.863		100.1
POST 2	SU4	3.791	999.000	2.867	999.000	7.662	999.000	4.323	999.000	6.487	6.487		100.3
POST 5	C3	5.833	999.000	3.773	999.000	10.085	999.000	5.690	999.000	8.537	8.537		105.6
POST 3	C4	3.950	999.000	2.849	999.000	7.616	999.000	4.297	999.000	6.447	6.447		104.4
POST 6	C5	3.680	999.000	2.620	999.000	7.001	999.000	3.950	999.000	5.927	5.927		104.8

LIVE LOAD DATA AT MOMENT CHECK POINT FOR
COMPOSITE STEEL AND CONCRETE FLEXURAL MEMBER - LOAD FACTOR RATING

DATE 3/11/99

D/P STRUCTURE I.D. = 770-074
MEMBER I.D. -- G 1
C.P. LOCATION -- 1.50

***** LIVE LOAD CALCULATIONS (IMPACT FACTOR = .150 FOR +BEND AND = .150 FOR -BEND)

-- LIVE LOAD --

LIVE LOAD			TRUCK MOMENT REDIS LL+I FT-KIPS	TRUCK MOMENT LL+IMP FT-KIPS	TRUCK MOMENT LL FT-KIPS	TRUCK MOMENT LOC.NO. 1 WHEEL FT.	DIR	LANE MOMENT LL+IMP FT-KIPS	LANE MOMENT LL FT-KIPS	LANE MOMENT LOC.CONC. LOAD #1 FT.	LANE MOMENT LOC.CONC. LOAD #2 FT.	FIXED SHEAR +V KIPS	FIXED SHEAR -V KIPS	SHEAR LEFT KIPS	SHEAR RIGHT KIPS
INV.	HS20	+BEND	.00	4331.0	3764.5	89.625	L	5483.7	4766.4	103.625	.000	11.30	-11.30	43.55	43.55
		-BEND	.00	.0	.0	.000	L	.0	.0	.000	.000	.00	.00		
OPER	HS20	+BEND	.00	4331.0	3764.5	89.625	L	5483.7	4766.4	103.625	.000	11.30	-11.30	43.55	43.55
		-BEND	.00	.0	.0	.000	L	.0	.0	.000	.000	.00	.00		
OPER 2	ST5	+BEND	.00	4459.7	3876.3	72.625		.0	.0	.000	.000	14.28	-8.32	38.20	38.20
		-BEND	.00	.0	.0	.000		.0	.0	.000	.000	-18.31	.00		
POST 1	SU2	+BEND	.00	2113.3	1836.8	90.625	L					7.22	-20.39	21.60	21.60
		-BEND	.00	.0	.0	.000	L					-1.73	.00		
POST 4	SU3	+BEND	.00	4082.9	3548.8	92.625						14.72	-12.90	41.15	41.15
		-BEND	.00	.0	.0	.000						-3.49	.00		
POST 2	SU4	+BEND	.00	4338.3	3770.8	90.292	L					4.13	-19.34	43.48	43.48
		-BEND	.00	.0	.0	.000	L					-4.53	.00		
POST 5	C3	+BEND	.00	3290.5	2860.1	93.625						18.14	-9.47	32.10	32.10
		-BEND	.00	.0	.0	.000						-5.33	.00		
POST 3	C4	+BEND	.00	4262.2	3704.7	71.792	L					12.99	-14.63	42.79	42.79
		-BEND	.00	.0	.0	.000	L					-10.37	.00		
POST 6	C5	+BEND	.00	4638.3	4031.6	71.792						9.36	-18.26	46.45	46.45
		-BEND	.00	.0	.0	.000						-11.09	.00		

RECALCULATE RATINGS FACTOR FROM Pg A GREEN TAB

HS INV. $= \frac{7422.41}{5483.7} = 1.353$

HS OP $= \frac{12370.68}{5483.7} = 2.255$

ST5 $= \frac{12370.68}{4459.7} = 2.773$

SU2 $= \frac{12370.68}{2113.3} = 5.853$

SU3 $= \frac{12370.68}{4082.9} = 3.029$

SU4 $= \frac{12370.68}{4338.3} = 2.851$

C3 $= \frac{12370.68}{3290.5} = 3.759$

C4 $= \frac{12370.68}{4262.2} = 2.902$

C5 $= \frac{12370.68}{4638.3} = 2.667$

LIVE LOAD DATA AT MOMENT CHECK POINT FOR
COMPOSITE STEEL AND CONCRETE FLEXURAL MEMBER - LOAD FACTOR RATING

DATE 3/11/99

D/P STRUCTURE I.D. = 770-074
MEMBER I.D. -- G 1
C.P. LOCATION -- 1.50

***** RATING FACTOR *****

		-- RATING FACTOR FOR -- MOMENT				-- RATING FACTOR FOR -- SERVICEABILITY				-- RATING FACTOR FOR -- SHEAR		RATING VALUE	SAFE LOAD CAP. (TONS)	
		TOP		BOTT		TOP		BOTT						
		+BEND	-BEND	+BEND	-BEND	+BEND	-BEND	+BEND	-BEND	LEFT	RIGHT			
INV.	HS20	.459	999.000	1.353 ~~.622~~	999.000	1.613	999.000	1.142	999.000	7.824	7.824	HS 27.0 ~~9.2~~	~~16.5~~	48.7
OPER	HS20	.765	999.000	2.255 ~~1.037~~	999.000	2.688	999.000	1.904	999.000	13.040	13.040	HS 45.1 ~~15.3~~	~~27.5~~	81.2
OPER 2	ST5	.941	999.000	2.773 ~~1.275~~	999.000	3.305	999.000	2.341	999.000	14.868	14.868	.0	~~37.6~~	110.9
POST 1	SU2	1.985	999.000	5.853 ~~2.691~~	999.000	6.975	999.000	4.941	999.000	26.290	26.290		~~33.7~~	99.5
POST 4	SU3	1.027	999.000	3.029 ~~1.392~~	999.000	3.610	999.000	2.557	999.000	13.802	13.802		~~33.9~~	99.9
POST 2	SU4	.967	999.000	2.851 ~~1.311~~	999.000	3.398	999.000	2.407	999.000	13.063	13.063		~~33.8~~	99.7
POST 5	C3	1.275	999.000	3.759 ~~1.729~~	999.000	4.479	999.000	3.173	999.000	17.695	17.695		~~35.7~~	105.2
POST 3	C4	.984	999.000	2.902 ~~1.334~~	999.000	3.458	999.000	2.450	999.000	13.274	13.274		~~36.1~~	106.3
POST 6	C5	.904	999.000	2.667 ~~1.226~~	999.000	3.178	999.000	2.251	999.000	12.226	12.226		~~36.2~~	106.6

LIVE LOAD DATA AT MOMENT CHECK POINT FOR
COMPOSITE STEEL AND CONCRETE FLEXURAL MEMBER - LOAD FACTOR RATING

DATE 3/11/99

D/F STRUCTURE I.D. = 770-074
MEMBER I.D. -- G 1
C.P. LOCATION -- 2.00

***** LIVE LOAD CALCULATIONS (IMPACT FACTOR = .150 FOR +BEND AND = .150 FOR -BEND)

	LIVE LOAD		-- LIVE LOAD -- TRUCK MOMENT REDIS LL+I FT-KIPS	TRUCK MOMENT LL+IMP FT-KIPS	TRUCK MOMENT LL FT-KIPS	TRUCK MOMENT LOC.NO. 1 WHEEL FT.	DIR	LANE MOMENT LL+IMP FT-KIPS	LANE MOMENT LL FT-KIPS	LANE MOMENT LOC.CONC. LOAD #1 FT.	LANE MOMENT LOC.CONC. LOAD #2 FT.	FIXED SHEAR +V KIPS	FIXED SHEAR -V KIPS	SHEAR LEFT KIPS	SHEAR RIGHT KIPS
INV.	HS20	+BEND	.00	.0	.0	89.625	L	.0	.0	.000	.000	-47.22	-47.22	115.88	130.94
		-BEND	.00	.0	.0	.000	L	.0	.0	.000	.000	-18.18	.00		
OPER	HS20	+BEND	.00	.0	.0	89.625	L	.0	.0	.000	.000	-47.22	-47.22	115.88	130.94
		-BEND	.00	.0	.0	.000	L	.0	.0	.000	.000	-18.18	.00		
OPER 2	ST5	+BEND	.00	.0	.0	72.625		.0	.0	.000	.000	-53.50	-53.50	-86.27	-97.48
		-BEND	.00	.0	.0	.000		.0	.0	.000	.000	-28.36	.00		
POST 1	SU2	+BEND	.00	.0	.0	90.625	L					-20.39	-20.39	41.73	47.15
		-BEND	.00	.0	.0	.000	L					-16.79	.00		
POST 4	SU3	+BEND	.00	.0	.0	92.625						-40.51	-40.51	-80.27	-90.70
		-BEND	.00	.0	.0	.000						-31.10	.00		
POST 2	SU4	+BEND	.00	.0	.0	90.292	L					-42.81	-42.81	84.97	96.02
		-BEND	.00	.0	.0	.000	L					-21.98	.00		
POST 5	C3	+BEND	.00	.0	.0	93.625						-37.08	-37.08	-65.45	-73.95
		-BEND	.00	.0	.0	.000						-20.39	.00		
POST 3	C4	+BEND	.00	.0	.0	71.792	L					-42.24	-42.24	86.39	97.62
		-BEND	.00	.0	.0	.000	L					-19.53	.00		
POST 6	C5	+BEND	.00	.0	.0	71.792						-45.87	-45.87	-94.06	-106.28
		-BEND	.00	.0	.0	.000						-21.13	.00		

LIVE LOAD DATA AT MOMENT CHECK POINT FOR
COMPOSITE STEEL AND CONCRETE FLEXURAL MEMBER - LOAD FACTOR RATING

DATE 3/11/99

D/P STRUCTURE I.D. = 770-074
MEMBER I.D. -- G 1
C.P. LOCATION -- 2.00

***** RATING FACTOR *****

		-- RATING FACTOR FOR -- MOMENT				-- RATING FACTOR FOR -- SERVICEABILITY				-- RATING FACTOR FOR -- SHEAR			
		TOP		BOTT		TOP		BOTT				RATING	SAFE
		+BEND	-BEND	+BEND	-BEND	+BEND	-BEND	+BEND	-BEND	LEFT	RIGHT	VALUE	LOAD CAP. (TONS)
INV.	HS20	999.000	999.000	999.000	999.000	999.000	999.000	999.000	999.000	4.901	4.901	HS 98.0	176.4
OPER	HS20	999.000	999.000	999.000	999.000	999.000	999.000	999.000	999.000	8.168	8.168	HS163.4	294.0
OPER 2	ST5	999.000	999.000	999.000	999.000	999.000	999.000	999.000	999.000	10.972	999.000	.0	438.9
POST 1	SU2	999.000	999.000	999.000	999.000	999.000	999.000	999.000	999.000	22.681	22.681		385.6
POST 4	SU3	999.000	999.000	999.000	999.000	999.000	999.000	999.000	999.000	11.792	999.000		389.1
POST 2	SU4	999.000	999.000	999.000	999.000	999.000	999.000	999.000	999.000	11.139	11.139		389.9
POST 5	C3	999.000	999.000	999.000	999.000	999.000	999.000	999.000	999.000	14.462	999.000		404.9
POST 3	C4	999.000	999.000	999.000	999.000	999.000	999.000	999.000	999.000	10.956	10.956		401.5
POST 6	C5	999.000	999.000	999.000	999.000	999.000	999.000	999.000	999.000	10.063	999.000		402.5

```
                                RECORD                                                  REC.NO.
01      031199YYS               AA                                  *LFS    POST          100
02770074                                  CPS   98X  7000000X  111000006                  100
05770074        5117SR 414  77002     375000DRMP                                          200
067700741 MAITLAND BLVD OVER LAKE BOSSE PRESTRESSED BEAM APPROACH SPAN                    300
067700742 G01=B14 SPAN 2 BULB-T 72 36-1/2"DIA.270 KSI. LR PULL 30.89 K/STRAND             400
067700743 G02=B47 SPAN 5 BULB T 72 46-1/2"DIA.270 KSI. LR PULL 30.98 K/STRAND             500
067700744 DESIGN LOAD HS20  USED AASHTO LLDF                                              600
07770074     6000004500          45.001.202  27006500                                     700
08770074G01 01   X   907187                  CPS          2.182                            800
08770074G02 01   X   999062                  CPS          2.182                            900
09770074G01  X   226797B                                                                  1000
09770074G02  X   249765B                                                                  1100
10770074G01 01                  W285.5     X   907187                                     1200
10770074G02 01                  W285.5     X   999062                                     1300
11770074G01 0101X   90718701                                                              1400
11770074G02 0101X   99906201                                                              1500
14770074G01 0101X   907187C  01   163.208.048.03.0096.0008.07.000                         1600
14770074G02 0101X   999062C  01   163.208.048.03.0096.0008.07.000                         1700
15770074G01  01                  720048002004000650550075300 01L 1308 03.00               1800
15770074G01  01                                              02L 1308 05.00               1900
15770074G01  01                                              03L  908 07.00               2000
15770074G01  01                  720048002004000650550075300 04L  108 09.00               2100
15770074G02  01                  720048002004000650550075300 01L 1308 03.00               2200
15770074G02  01                                              02L 1308 05.00               2300
15770074G02  01                                              03L 1108 07.00               2400
15770074G02  01                                              04L  508 09.00               2500
15770074G02  01                                              05L  108 11.00               2600
15770074G02  01                                              06L  108 13.00               2700
15770074G02  01                                              07L  108 15.00               2800
15770074G02  01                  720048002004000650550075300 08L  108 17.00               2900
17770074G01 01S01X    01666     01B  204  01X    01666                                    3000
17770074G01 01S02X    07500     01B  204  03X    02500                                    3100
17770074G01 01S03X    42500     01B  104  17X    02500                                    3200
17770074G01 01S04X    93324     01B  104  28X    03333                                    3300
17770074G01 01S05X    50000     01B  104  10X    05000                                    3400
17770074G01 01S06X   249990     01B  104  30X    08333                                    3500
17770074G01 01S07X    17226     01B  104  02X    08613                                    3600
17770074G01 01S08X   249990     01B  104  30X    08333                                    3700
17770074G01 01S09X    50000     01B  104  10X    05000                                    3800
17770074G01 01S10X    93324     01B  104  28X    03333                                    3900
17770074G01 01S11X    42500     01B  104  17X    02500                                    4000
17770074G01 01S12X    07500     01B  204  03X    02500                                    4100
17770074G01 01S13X    01666     01B  204  01X    01666                                    4200
17770074G02 01S01X    01666     01B  204  01X    01666                                    4300
17770074G02 01S02X    07500     01B  204  03X    02500                                    4400
17770074G02 01S03X    82500     01B  104  33X    02500                                    4500
17770074G02 01S04X    69993     01B  104  21X    03333                                    4600
17770074G02 01S05X   245000     01B  104  49X    05000                                    4700
17770074G02 01S06X    83330     01B  104  10X    08333                                    4800
17770074G02 01S07X    19084     01B  104  02X    09542                                    4900
17770074G02 01S08X    83330     01B  104  10X    08333                                    5000
```



```
                                RECORD                                                  REC.NO.
17770074G02 01S09X   245000     01B  104  49X    05000                                    5100
17770074G02 01S10X    69993     01B  104  21X    03333                                    5200
17770074G02 01S11X    82500     01B  104  33X    02500                                    5300
17770074G02 01S12X    07500     01B  204  03X    02500                                    5400
17770074G02 01S13X    01666     01B  204  01X    01666                                    5500
```

THE FOLLOWING STRUCTURES WERE SELECTED

JR

A770074P.DAT

PRESTRESSED. BEAM.

LIVE LOAD DATA AT MOMENT CHECK POINT FOR
COMPOSITE PRESTRESSED CONCRETE FLEXURAL MEMBER - LOAD FACTOR RATING

DATE 3/11/99

D/P STRUCTURE I.D. = 770-074
MEMBER I.D. -- G 1
C.P. LOCATION -- 1.00

***** LIVE LOAD CALCULATIONS (IMPACT FACTOR = .232 FOR +BEND AND = .232 FOR -BEND)

-- LIVE LOAD --

LIVE LOAD			TRUCK MOMENT REDIS LL+I FT-KIPS	TRUCK MOMENT LL+IMP FT-KIPS	TRUCK MOMENT LL FT-KIPS	TRUCK MOMENT LOC.NO. 1 WHEEL FT.	DIR	LANE MOMENT LL+IMP FT-KIPS	LANE MOMENT LL FT-KIPS	LANE MOMENT LOC.CONC. LOAD #1 FT.	LANE MOMENT LOC.CONC. LOAD #2 FT.	FIXED SHEAR +V KIPS	FIXED SHEAR -V KIPS	SHEAR LEFT KIPS	SHEAR RIGHT KIPS
INV.	HS20	+BEND	.00	.0	.0	.000	L	.0	.0	.000	.000	.00	.00	.00	86.80
		-BEND	.00	.0	.0	.000	L	.0	.0	.000	.000	.00	.00		
OPER	HS20	+BEND	.00	.0	.0	.000	L	.0	.0	.000	.000	.00	.00	.00	86.80
		-BEND	.00	.0	.0	.000	L	.0	.0	.000	.000	.00	.00		
OPER 2	ST5	+BEND	.00	.0	.0	31.359		.0	.0	.000	.000	.00	.00	.00	80.76
		-BEND	.00	.0	.0	.000		.0	.0	.000	.000	.00	.00		
POST 1	SU2	+BEND	.00	.0	.0	.000	L					.00	.00	.00	43.38
		-BEND	.00	.0	.0	.000	L					.00	.00		
POST 4	SU3	+BEND	.00	.0	.0	45.360						.00	.00	.00	82.40
		-BEND	.00	.0	.0	.000						.00	.00		
POST 2	SU4	+BEND	.00	.0	.0	.000	L					.00	.00	.00	87.01
		-BEND	.00	.0	.0	.000	L					.00	.00		
POST 5	C3	+BEND	.00	.0	.0	45.360						.00	.00	.00	63.41
		-BEND	.00	.0	.0	.000						.00	.00		
POST 3	C4	+BEND	.00	.0	.0	.000	L					.00	.00	.00	84.78
		-BEND	.00	.0	.0	.000	L					.00	.00		
POST 6	C5	+BEND	.00	.0	.0	45.360						.00	.00	.00	92.10
		-BEND	.00	.0	.0	.000						.00	.00		

LIVE LOAD DATA AT MOMENT CHECK POINT FOR
COMPOSITE PRESTRESSED CONCRETE FLEXURAL MEMBER - LOAD FACTOR RATING

DATE 3/11/99

D/P STRUCTURE I.D. = 770-074
MEMBER I.D. -- G 1
C.P. LOCATION -- 1.00

***** RATING FACTOR *****

		-- RATING FACTOR FOR -- MOMENT				-- RATING FACTOR FOR -- SHEAR		RATING	SAFE
		TOP		BOTT		LEFT	RIGHT	VALUE	LOAD CAP.(TONS)
		+BEND	-BEND	+BEND	-BEND				
INV.	HS20	999.000	.000	999.000	.000	999.000	4.518	HS 90.4	162.7
OPER	HS20	999.000	.000	999.000	.000	999.000	7.530	HS150.6	271.1
OPER 2	ST5	.000	.000	.000	.000	999.000	8.094	.0	323.8
POST 1	SU2	999.000	.000	999.000	.000	999.000	15.068		256.2
POST 4	SU3	.000	.000	.000	.000	999.000	7.933		261.8
POST 2	SU4	999.000	.000	999.000	.000	999.000	7.513		262.9
POST 5	C3	.000	.000	.000	.000	999.000	10.309		288.7
POST 3	C4	999.000	.000	999.000	.000	999.000	7.710		282.6
POST 6	C5	.000	.000	.000	.000	999.000	7.097		283.9

LIVE LOAD DATA AT MOMENT CHECK POINT FOR
COMPOSITE PRESTRESSED CONCRETE FLEXURAL MEMBER - LOAD FACTOR RATING

DATE 3/11/99

D/P STRUCTURE I.D. = 770-074
MEMBER I.D. -- G 1
C.P. LOCATION -- 1.25

***** LIVE LOAD CALCULATIONS (IMPACT FACTOR = .232 FOR +BEND AND = .232 FOR -BEND)

	LIVE LOAD		-- LIVE LOAD -- TRUCK MOMENT REDIS LL+I FT-KIPS	TRUCK MOMENT LL+IMP FT-KIPS	TRUCK MOMENT LL FT-KIPS	TRUCK MOMENT LOC.NO. 1 WHEEL FT.	DIR	LANE MOMENT LL+IMP FT-KIPS	LANE MOMENT LL FT-KIPS	LANE MOMENT LOC.CONC. LOAD #1 FT.	LANE MOMENT LOC.CONC. LOAD #2 FT.	FIXED SHEAR +V KIPS	FIXED SHEAR -V KIPS	SHEAR LEFT KIPS	SHEAR RIGHT KIPS
INV.	HS20	+BEND	.00	1420.1	1152.9	50.680	R	1075.1	872.8	22.680	.000	.00	.00	66.08	64.00
		-BEND	.00	.0	.0	.000	L	.0	.0	.000	.000	.00	.00		
OPER	HS20	+BEND	.00	1420.1	1152.9	50.680	R	1075.1	872.8	22.680	.000	.00	.00	66.08	64.00
		-BEND	.00	.0	.0	.000	L	.0	.0	.000	.000	.00	.00		
OPER 2	ST5	+BEND	.00	1283.0	1041.6	-4.320		.0	.0	.000	.000	.00	.00	59.70	57.82
		-BEND	.00	.0	.0	.000		.0	.0	.000	.000	.00	.00		
POST 1	SU2	+BEND	.00	724.8	588.4	35.680	R					.00	.00	33.73	32.66
		-BEND	.00	.0	.0	.000	L					.00	.00		
POST 4	SU3	+BEND	.00	1365.8	1108.8	37.846						.00	.00	63.56	61.55
		-BEND	.00	.0	.0	.000						.00	.00		
POST 2	SU4	+BEND	.00	1439.9	1168.9	40.180	R					.00	.00	67.00	64.89
		-BEND	.00	.0	.0	.000	L					.00	.00		
POST 5	C3	+BEND	.00	1011.3	821.0	12.680						.00	.00	47.06	45.58
		-BEND	.00	.0	.0	.000						.00	.00		
POST 3	C4	+BEND	.00	1364.3	1107.6	58.680	R					.00	.00	63.49	61.49
		-BEND	.00	.0	.0	.000	L					.00	.00		
POST 6	C5	+BEND	.00	1479.3	1201.0	58.680						.00	.00	68.84	66.67
		-BEND	.00	.0	.0	.000						.00	.00		

DATE 3/11/99

LIVE LOAD DATA AT MOMENT CHECK POINT FOR
COMPOSITE PRESTRESSED CONCRETE FLEXURAL MEMBER - LOAD FACTOR RATING

D/P STRUCTURE I.D. = 770-074
MEMBER I.D. -- G 1
C.P. LOCATION -- 1.25

Steel 601

L = 63.2

SPAN 3 DF = 2.182

***** RATING FACTOR *****

		-- RATING FACTOR FOR -- MOMENT				-- RATING FACTOR FOR -- SHEAR			
		TOP		BOTT					
		+BEND	-BEND	+BEND	-BEND	LEFT	RIGHT	RATING VALUE	SAFE LOAD CAP. (TONS)
INV.	HS20	2.137	.000	2.137	.000	1.396	1.441	HS ~~27.~~9	~~50.2~~ 48.7 1.353
OPER	HS20	3.562	.000	3.562	.000	2.249	2.322	HS 45.0	81.0
OPER 2	ST5	3.943	.000	3.943	.000	2.473	2.553	.0	98.9
POST 1	SU2	6.979	.000	6.979	.000	4.230	4.368		71.9
POST 4	SU3	3.704	.000	3.704	.000	2.332	2.408		77.0
POST 2	SU4	3.513	.000	3.513	.000	2.220	2.292		77.7
POST 5	C3	5.002	.000	5.002	.000	3.090	3.191		86.5
POST 3	C4	3.708	.000	3.708	.000	2.335	2.411		85.6
POST 6	C5	3.420	.000	3.420	.000	2.165	2.235		86.6

PRESTRESSED

LIVE LOAD DATA AT MOMENT CHECK POINT FOR
COMPOSITE PRESTRESSED CONCRETE FLEXURAL MEMBER - LOAD FACTOR RATING

DATE 3/11/99

D/P STRUCTURE I.D. = 770-074
MEMBER I.D. -- G 1
C.P. LOCATION -- 1.50

***** LIVE LOAD CALCULATIONS (IMPACT FACTOR = .232 FOR +BEND AND = .232 FOR -BEND)

	LIVE LOAD		-- LIVE LOAD -- TRUCK MOMENT REDIS LL+I FT-KIPS	TRUCK MOMENT LL+IMP FT-KIPS	TRUCK MOMENT LL FT-KIPS	TRUCK MOMENT LOC.NO. 1 WHEEL FT.	DIR	LANE MOMENT LL+IMP FT-KIPS	LANE MOMENT LL FT-KIPS	LANE MOMENT LOC.CONC. LOAD #1 FT.	LANE MOMENT LOC.CONC. LOAD #2 FT.	FIXED SHEAR +V KIPS	FIXED SHEAR -V KIPS	SHEAR LEFT KIPS	SHEAR RIGHT KIPS
INV.	HS20	+BEND	.00	1818.2	1476.1	31.359	L	1433.4	1163.7	45.359	.000	.00	.00	40.35	40.35
		-BEND	.00	.0	.0	.000	L	.0	.0	.000	.000	.00	.00		
OPER	HS20	+BEND	.00	1818.2	1476.1	31.359	L	1433.4	1163.7	45.359	.000	.00	.00	40.35	40.35
		-BEND	.00	.0	.0	.000	L	.0	.0	.000	.000	.00	.00		
OPER 2	ST5	+BEND	.00	1642.7	1333.6	14.359		.0	.0	.000	.000	.00	.00	-31.72	-31.72
		-BEND	.00	.0	.0	.000		.0	.0	.000	.000	.00	.00		
POST 1	SU2	+BEND	.00	931.5	756.2	32.359	L					.00	.00	21.56	21.56
		-BEND	.00	.0	.0	.000	L					.00	.00		
POST 4	SU3	+BEND	.00	1787.4	1451.1	34.359						.00	.00	39.95	39.95
		-BEND	.00	.0	.0	.000						.00	.00		
POST 2	SU4	+BEND	.00	1904.3	1545.9	32.026	L					.00	.00	41.97	41.97
		-BEND	.00	.0	.0	.000	L					.00	.00		
POST 5	C3	+BEND	.00	1330.5	1080.2	35.359						.00	.00	27.07	27.07
		-BEND	.00	.0	.0	.000						.00	.00		
POST 3	C4	+BEND	.00	1693.6	1374.9	13.526	L					.00	.00	37.31	37.31
		-BEND	.00	.0	.0	.000	L					.00	.00		
POST 6	C5	+BEND	.00	1840.3	1494.0	13.526						.00	.00	40.27	40.27
		-BEND	.00	.0	.0	.000						.00	.00		

LIVE LOAD DATA AT MOMENT CHECK POINT FOR
COMPOSITE PRESTRESSED CONCRETE FLEXURAL MEMBER - LOAD FACTOR RATING

DATE 3/11/99

D/P STRUCTURE I.D. = 770-074
MEMBER I.D. -- G 1
C.P. LOCATION -- C.P

***** RATING FACTOR *****

		-- RATING FACTOR FOR -- MOMENT TOP +BEND	TOP -BEND	BOTT +BEND	BOTT -BEND	-- RATING FACTOR FOR -- SHEAR LEFT	SHEAR RIGHT	RATING VALUE	SAFE LOAD CAP. (TONS)
INV.	HS20	1.440	.000	1.440	.000	1.650	1.650	HS 28.8	51.8
OPER	HS20	2.399	.000	2.399	.000	2.750	2.750	HS 48.0	86.4
OPER 2	ST5	2.656	.000	2.656	.000	3.499	3.499	.0	106.2
POST 1	SU2	4.683	.000	4.683	.000	5.146	5.146		79.6
POST 4	SU3	2.441	.000	2.441	.000	2.777	2.777		80.5
POST 2	SU4	2.291	.000	2.291	.000	2.644	2.644		80.2
POST 5	C3	3.279	.000	3.279	.000	4.099	4.099		91.8
POST 3	C4	2.576	.000	2.576	.000	2.974	2.974		94.4
POST 6	C5	2.371	.000	2.371	.000	2.755	2.755		94.8

LIVE LOAD DATA AT MOMENT CHECK POINT FOR
COMPOSITE PRESTRESSED CONCRETE FLEXURAL MEMBER - LOAD FACTOR RATING

DATE 3/11/99

D/P STRUCTURE I.D. = 770-074
MEMBER I.D. -- G 1
C.P. LOCATION -- 2.00

***** LIVE LOAD CALCULATIONS (IMPACT FACTOR = .232 FOR +BEND AND = .232 FOR -BEND)

LIVE LOAD			-- LIVE LOAD -- TRUCK MOMENT REDIS LL+I FT-KIPS	TRUCK MOMENT LL+IMP FT-KIPS	TRUCK MOMENT LL FT-KIPS	TRUCK MOMENT LOC.NO. 1 WHEEL FT.	TRUCK MOMENT DIR	LANE MOMENT LL+IMP FT-KIPS	LANE MOMENT LL FT-KIPS	LANE MOMENT LOC.CONC. LOAD #1 FT.	LANE MOMENT LOC.CONC. LOAD #2 FT.	FIXED SHEAR +V KIPS	FIXED SHEAR -V KIPS	SHEAR LEFT KIPS	SHEAR RIGHT KIPS
INV.	HS20	+BEND	.00	.0	.0	.000	L	.0	.0	.000	.000	.00	.00	86.80	91.61
		-BEND	.00	.0	.0	.000	L	.0	.0	.000	.000	.00	.00		
OPER	HS20	+BEND	.00	.0	.0	.000	L	.0	.0	.000	.000	.00	.00	86.80	91.61
		-BEND	.00	.0	.0	.000	L	.0	.0	.000	.000	.00	.00		
OPER 2	ST5	+BEND	.00	.0	.0	14.359		.0	.0	.000	.000	.00	.00	-81.45	-85.96
		-BEND	.00	.0	.0	.000		.0	.0	.000	.000	.00	.00		
POST 1	SU2	+BEND	.00	.0	.0	.000	L					.00	.00	43.38	45.78
		-BEND	.00	.0	.0	.000	L					.00	.00		
POST 4	SU3	+BEND	.00	.0	.0	34.359						.00	.00	-82.40	-86.96
		-BEND	.00	.0	.0	.000						.00	.00		
POST 2	SU4	+BEND	.00	.0	.0	.000	L					.00	.00	87.01	91.82
		-BEND	.00	.0	.0	.000	L					.00	.00		
POST 5	C3	+BEND	.00	.0	.0	35.359						.00	.00	-63.41	-66.92
		-BEND	.00	.0	.0	.000						.00	.00		
POST 3	C4	+BEND	.00	.0	.0	.000	L					.00	.00	84.78	89.48
		-BEND	.00	.0	.0	.000	L					.00	.00		
POST 6	C5	+BEND	.00	.0	.0	13.526						.00	.00	-92.10	-97.20
		-BEND	.00	.0	.0	.000						.00	.00		

LIVE LOAD DATA AT MOMENT CHECK POINT FOR
COMPOSITE PRESTRESSED CONCRETE FLEXURAL MEMBER - LOAD FACTOR RATING

DATE 3/11/99

D/P STRUCTURE I.D. = 770-074
MEMBER I.D. -- G 1
C.P. LOCATION -- 2.00

***** RATING FACTOR *****

		-- RATING FACTOR FOR -- MOMENT				-- RATING FACTOR FOR -- SHEAR		RATING VALUE	SAFE LOAD CAP.(TONS)
		TOP		BOTT					
		+BEND	-BEND	+BEND	-BEND	LEFT	RIGHT		
INV.	HS20	999.000	.000	999.000	.000	4.518	999.000	HS 90.4	162.7
OPER	HS20	999.000	.000	999.000	.000	7.530	999.000	HS150.6	271.1
OPER 2	ST5	.000	.000	.000	.000	8.026	999.000	.0	321.0
POST 1	SU2	999.000	.000	999.000	.000	15.068	999.000		256.2
POST 4	SU3	.000	.000	.000	.000	7.933	999.000		261.8
POST 2	SU4	999.000	.000	999.000	.000	7.513	999.000		262.9
POST 5	C3	.000	.000	.000	.000	10.309	999.000		288.7
POST 3	C4	999.000	.000	999.000	.000	7.710	999.000		282.6
POST 6	C5	.000	.000	.000	.000	7.097	999.000		283.9

LIVE LOAD DATA AT MOMENT CHECK POINT FOR
COMPOSITE PRESTRESSED CONCRETE FLEXURAL MEMBER - LOAD FACTOR RATING

DATE 3/11/99

D/P STRUCTURE I.D. = 770-074
MEMBER I.D. -- G 2
C.P. LOCATION -- 1.00

***** LIVE LOAD CALCULATIONS (IMPACT FACTOR = .222 FOR +BEND AND = .2280FOR -BEND)

-- LIVE LOAD --

LIVE LOAD			TRUCK MOMENT REDIS LL+I FT-KIPS	TRUCK MOMENT LL+IMP FT-KIPS	TRUCK MOMENT LL FT-KIPS	TRUCK MOMENT LOC.NO. 1 WHEEL FT.	DIR	LANE MOMENT LL+IMP FT-KIPS	LANE MOMENT LL FT-KIPS	LANE MOMENT LOC.CONC. LOAD #1 FT.	LANE MOMENT LOC.CONC. LOAD #2 FT.	FIXED SHEAR +V KIPS	FIXED SHEAR -V KIPS	SHEAR LEFT KIPS	SHEAR RIGHT KIPS
INV.	HS20	+BEND	.00	.0	.0	.000	L	.0	.0	.000	.000	.00	.00	.00	87.05
		-BEND	.00	.0	.0	.000	L	.0	.0	.000	.000	.00	.00		
OPER	HS20	+BEND	.00	.0	.0	.000	L	.0	.0	.000	.000	.00	.00	.00	87.05
		-BEND	.00	.0	.0	.000	L	.0	.0	.000	.000	.00	.00		
OPER 2	ST5	+BEND	.00	.0	.0	49.954		.0	.0	.000	.000	.00	.00	.00	81.60
		-BEND	.00	.0	.0	.000		.0	.0	.000	.000	.00	.00		
POST 1	SU2	+BEND	.00	.0	.0	.000	L					.00	.00	.00	43.26
		-BEND	.00	.0	.0	.000	L					.00	.00		
POST 4	SU3	+BEND	.00	.0	.0	49.953						.00	.00	.00	82.34
		-BEND	.00	.0	.0	.000						.00	.00		
POST 2	SU4	+BEND	.00	.0	.0	.000	L					.00	.00	.00	86.98
		-BEND	.00	.0	.0	.000	L					.00	.00		
POST 5	C3	+BEND	.00	.0	.0	49.953						.00	.00	.00	64.00
		-BEND	.00	.0	.0	.000						.00	.00		
POST 3	C4	+BEND	.00	.0	.0	.000	L					.00	.00	.00	85.38
		-BEND	.00	.0	.0	.000	L					.00	.00		
POST 6	C5	+BEND	.00	.0	.0	49.954						.00	.00	.00	92.80
		-BEND	.00	.0	.0	.000						.00	.00		

LIVE LOAD DATA AT MOMENT CHECK POINT FOR
COMPOSITE PRESTRESSED CONCRETE FLEXURAL MEMBER - LOAD FACTOR RATING

DATE 3/11/99

D/P STRUCTURE I.D. = 770-074
MEMBER I.D. -- G 2
C.P. LOCATION -- 1.00

***** RATING FACTOR *****

		-- RATING FACTOR FOR -- MOMENT				-- RATING FACTOR FOR -- SHEAR		RATING VALUE	SAFE LOAD CAP.(TONS)
		TOP		BOTT					
		+BEND	-BEND	+BEND	-BEND	LEFT	RIGHT		
INV.	HS20	999.000	.000	999.000	.000	999.000	4.425	HS 88.5	159.3
OPER	HS20	999.000	.000	999.000	.000	999.000	7.376	HS147.5	265.5
OPER 2	ST5	.000	.000	.000	.000	999.000	7.868	.0	314.7
POST 1	SU2	999.000	.000	999.000	.000	999.000	14.842		252.3
POST 4	SU3	.000	.000	.000	.000	999.000	7.798		257.3
POST 2	SU4	999.000	.000	999.000	.000	999.000	7.381		258.3
POST 5	C3	.000	.000	.000	.000	999.000	10.032		280.9
POST 3	C4	999.000	.000	999.000	.000	999.000	7.519		275.6
POST 6	C5	.000	.000	.000	.000	999.000	6.918		276.7

LIVE LOAD DATA AT MOMENT CHECK POINT FOR
COMPOSITE PRESTRESSED CONCRETE FLEXURAL MEMBER - LOAD FACTOR RATING

DATE 3/11/99

D/P STRUCTURE I.D. = 770-074
MEMBER I.D. -- G 2
C.P. LOCATION -- 1.25

***** LIVE LOAD CALCULATIONS (IMPACT FACTOR = .222 FOR +BEND AND = .222 FOR -BEND)

	LIVE LOAD		-- LIVE LOAD -- TRUCK MOMENT REDIS LL+I FT-KIPS	TRUCK MOMENT LL+IMP FT-KIPS	TRUCK MOMENT LL FT-KIPS	TRUCK MOMENT LOC.NO. 1 WHEEL FT.	DIR	LANE MOMENT LL+IMP FT-KIPS	LANE MOMENT LL FT-KIPS	LANE MOMENT LOC.CONC. LOAD #1 FT.	LANE MOMENT LOC.CONC. LOAD #2 FT.	FIXED SHEAR +V KIPS	FIXED SHEAR -V KIPS	SHEAR LEFT KIPS	SHEAR RIGHT KIPS
INV.	HS20	+BEND	.00	1574.6	1288.2	52.977	R	1248.3	1021.2	24.976	.000	.00	.00	67.05	64.47
		-BEND	.00	.0	.0	.000	L	.0	.0	.000	.000	.00	.00		
OPER	HS20	+BEND	.00	1574.6	1288.2	52.977	R	1248.3	1021.2	24.976	.000	.00	.00	67.05	64.47
		-BEND	.00	.0	.0	.000	L	.0	.0	.000	.000	.00	.00		
OPER 2	ST5	+BEND	.00	1438.5	1176.9	-2.024		.0	.0	.000	.000	.00	.00	61.25	58.90
		-BEND	.00	.0	.0	.000		.0	.0	.000	.000	.00	.00		
POST 1	SU2	+BEND	.00	797.3	652.3	37.976	R					.00	.00	33.95	32.65
		-BEND	.00	.0	.0	.000	L					.00	.00		
POST 4	SU3	+BEND	.00	1506.9	1232.8	40.143						.00	.00	64.17	61.70
		-BEND	.00	.0	.0	.000						.00	.00		
POST 2	SU4	+BEND	.00	1589.6	1300.5	42.476	R					.00	.00	67.69	65.09
		-BEND	.00	.0	.0	.000	L					.00	.00		
POST 5	C3	+BEND	.00	1132.2	926.3	54.977						.00	.00	48.21	46.36
		-BEND	.00	.0	.0	.000						.00	.00		
POST 3	C4	+BEND	.00	1522.2	1245.3	60.977	R					.00	.00	64.82	62.33
		-BEND	.00	.0	.0	.000	L					.00	.00		
POST 6	C50	+BEND	R .00	1651.7	1351.3	60.977		.00	.00	64.82	62.33	.00	.00	70.33	67.63
		-BEND	.00	.0	.0	.000						.00	.00		

LIVE LOAD DATA AT MOMENT CHECK POINT FOR
COMPOSITE PRESTRESSED CONCRETE FLEXURAL MEMBER - LOAD FACTOR RATING

DATE 3/11/99

D/P STRUCTURE I.D. = 770-074
MEMBER I.D. -- G 2
C.P. LOCATION -- 1.25

***** RATING FACTOR *****

		-- RATING FACTOR FOR -- MOMENT				-- RATING FACTOR FOR -- SHEAR			
		TOP		BOTT					
		+BEND	-BEND	+BEND	-BEND	LEFT	RIGHT	RATING VALUE	SAFE LOAD CAP.(TONS)
INV.	HS20	2.418	.000	2.418	.000	1.798	1.870	HS 36.0	64.7
OPER	HS20	4.030	.000	4.030	.000	2.912	3.028	HS 58.2	104.8
OPER 2	ST5	4.411	.000	4.411	.000	3.172	3.299	.0	126.9
POST 1	SU2	7.957	.000	7.957	.000	5.560	5.782		94.5
POST 4	SU3	4.210	.000	4.210	.000	3.035	3.157		100.2
POST 2	SU4	3.991	.000	3.991	.000	2.886	3.001		101.0
POST 5	C3	5.604	.000	5.604	.000	3.980	4.139		111.4
POST 3	C4	4.168	.000	4.168	.000	3.007	3.127		110.2
POST 6	C5	3.841	.000	3.841	.000	2.783	2.894		111.3

LIVE LOAD DATA AT MOMENT CHECK POINT FOR
COMPOSITE PRESTRESSED CONCRETE FLEXURAL MEMBER - LOAD FACTOR RATING

DATE 3/11/99

D/P STRUCTURE I.D. = 770-074
MEMBER I.D. -- G 2
C.P. LOCATION -- 1.50

***** LIVE LOAD CALCULATIONS (IMPACT FACTOR = .222 FOR +BEND AND = .222 FOR -BEND)

-- LIVE LOAD --

	LIVE LOAD		TRUCK MOMENT REDIS LL+I FT-KIPS	TRUCK MOMENT LL+IMP FT-KIPS	TRUCK MOMENT LL FT-KIPS	TRUCK MOMENT LOC.NO. 1 WHEEL FT.	DIR	LANE MOMENT LL+IMP FT-KIPS	LANE MOMENT LL FT-KIPS	LANE MOMENT LOC.CONC. LOAD #1 FT.	LANE MOMENT LOC.CONC. LOAD #2 FT.	FIXED SHEAR +V KIPS	FIXED SHEAR -V KIPS	SHEAR LEFT KIPS	SHEAR RIGHT KIPS
INV.	HS20	+BEND	.00	2024.7	1656.5	35.953	L	1664.4	1361.7	49.953	.000	.00	.00	41.07	41.07
		-BEND	.00	.0	.0	.000	L	.0	.0	.000	.000	.00	.00		
OPER	HS20	+BEND	.00	2024.7	1656.5	35.953	L	1664.4	1361.7	49.953	.000	.00	.00	41.07	41.07
		-BEND	.00	.0	.0	.000	L	.0	.0	.000	.000	.00	.00		
OPER 2	ST5	+BEND	.00	1875.1	1534.1	18.953		.0	.0	.000	.000	.00	.00	-32.76	-32.76
		-BEND	.00	.0	.0	.000		.0	.0	.000	.000	.00	.00		
POST 1	SU2	+BEND	.00	1028.4	841.4	36.953	L					.00	.00	21.66	21.66
		-BEND	.00	.0	.0	.000	L					.00	.00		
POST 4	SU3	+BEND	.00	1975.8	1616.4	38.953						.00	.00	40.32	40.32
		-BEND	.00	.0	.0	.000						.00	.00		
POST 2	SU4	+BEND	.00	2104.0	1721.4	36.620	L					.00	.00	42.40	42.40
		-BEND	.00	.0	.0	.000	L					.00	.00		
POST 5	C3	+BEND	.00	1491.8	1220.5	39.953						.00	.00	28.05	28.05
		-BEND	.00	.0	.0	.000						.00	.00		
POST 3	C4	+BEND	.00	1905.1	1558.6	18.120	L					.00	.00	38.40	38.40
		-BEND	.00	.0	.0	.000	L					.00	.00		
POST 6	C5	+BEND	.00	2071.2	1694.5	18.120						.00	.00	41.51	41.51
		-BEND	.00	.0	.0	.000						.00	.00		

DATE 3/11/99

LIVE LOAD DATA AT MOMENT CHECK POINT FOR
COMPOSITE PRESTRESSED CONCRETE FLEXURAL MEMBER - LOAD FACTOR RATING

D/P STRUCTURE I.D. = 770-074
MEMBER I.D. -- G 2
C.P. LOCATION -- 1.50

***** RATING FACTOR *****

		-- RATING FACTOR FOR -- MOMENT				-- RATING FACTOR FOR -- SHEAR			
		TOP		BOTT					
		+BEND	-BEND	+BEND	-BEND	LEFT	RIGHT	RATING VALUE	SAFE LOAD CAP.(TONS)
INV.	HS20	1.630	.000	1.630	.000	1.508	1.508	HS 30.2	54.3
OPER	HS20	2.717	.000	2.717	.000	2.513	2.513	HS 50.3	90.5
OPER 2	ST5	2.933	.000	2.933	.000	3.150	3.150	.0	117.3
POST 1	SU2	5.348	.000	5.348	.000	4.764	4.764		81.0
POST 4	SU3	2.784	.000	2.784	.000	2.559	2.559		84.4
POST 2	SU4	2.614	.000	2.614	.000	2.434	2.434		85.2
POST 5	C3	3.687	.000	3.687	.000	3.679	3.679		103.0
POST 3	C4	2.887	.000	2.887	.000	2.687	2.687		98.5
POST 6	C5	2.656	.000	2.656	.000	2.486	2.486		99.4

LIVE LOAD DATA AT MOMENT CHECK POINT FOR
COMPOSITE PRESTRESSED CONCRETE FLEXURAL MEMBER - LOAD FACTOR RATING

DATE 3/11/99

D/P STRUCTURE I.D. = 770-074
MEMBER I.D. -- G 2
C.P. LOCATION -- 2.00

***** LIVE LOAD CALCULATIONS (IMPACT FACTOR = .222 FOR +BEND AND = .222 FOR -BEND)

-- LIVE LOAD --

LIVE LOAD			TRUCK MOMENT REDIS LL+I FT-KIPS	TRUCK MOMENT LL+IMP FT-KIPS	TRUCK MOMENT LL FT-KIPS	TRUCK MOMENT LOC.NO. 1 WHEEL FT.	DIR	LANE MOMENT LL+IMP FT-KIPS	LANE MOMENT LL FT-KIPS	LANE MOMENT LOC.CONC. LOAD #1 FT.	LANE MOMENT LOC.CONC. LOAD #2 FT.	FIXED SHEAR +V KIPS	FIXED SHEAR -V KIPS	SHEAR LEFT KIPS	SHEAR RIGHT KIPS
INV.	HS20	+BEND	.00	.0	.0	.000	L	.0	.0	.000	.000	.00	.00	87.05	92.58
		-BEND	.00	.0	.0	.000	L	.0	.0	.000	.000	.00	.00		
OPER	HS20	+BEND	.00	.0	.0	.000	L	.0	.0	.000	.000	.00	.00	87.05	92.58
		-BEND	.00	.0	.0	.000	L	.0	.0	.000	.000	.00	.00		
OPER 2	ST5	+BEND	.00	.0	.0	18.953		.0	.0	.000	.000	.00	.00	-82.44	-87.68
		-BEND	.00	.0	.0	.000		.0	.0	.000	.000	.00	.00		
POST 1	SU2	+BEND	.00	.0	.0	.000	L					.00	.00	43.26	46.01
		-BEND	.00	.0	.0	.000	L					.00	.00		
POST 4	SU3	+BEND	.00	.0	.0	38.953						.00	.00	-82.34	-87.57
		-BEND	.00	.0	.0	.000						.00	.00		
POST 2	SU4	+BEND	.00	.0	.0	.000	L					.00	.00	86.98	92.51
		-BEND	.00	.0	.0	.000	L					.00	.00		
POST 5	C3	+BEND	.00	.0	.0	39.953						.00	.00	-64.00	-68.07
		-BEND	.00	.0	.0	.000						.00	.00		
POST 3	C4	+BEND	.00	.0	.0	.000	L					.00	.00	85.38	90.81
		-BEND	.00	.0	.0	.000	L					.00	.00		
POST 6	C5	+BEND	.00	.0	.0	18.120						.00	.00	-92.80	-98.70
		-BEND	.00	.0	.0	.000						.00	.00		

LIVE LOAD DATA AT MOMENT CHECK POINT FOR
COMPOSITE PRESTRESSED CONCRETE FLEXURAL MEMBER - LOAD FACTOR RATING

DATE 3/11/99

D/P STRUCTURE I.D. = 770-074
MEMBER I.D. -- G 2
C.P. LOCATION -- 2.00

MEMBER I.D. -- G 2

***** RATING FACTOR *****

		-- RATING FACTOR FOR -- MOMENT				-- RATING FACTOR FOR -- SHEAR			
		TOP		BOTT					
		+BEND	-BEND	+BEND	-BEND	LEFT	RIGHT	RATING VALUE	SAFE LOAD CAP.(TONS)
INV.	HS20	999.000	.000	999.000	.000	2.956	999.000	HS 59.1	106.4
OPER	HS20	999.000	.000	999.000	.000	4.927	999.000	HS 98.5	177.4
OPER 2	ST5	.000	.000	.000	.000	5.202	999.000	.0	208.1
POST 1	SU2	999.000	.000	999.000	.000	9.915	999.000		168.6
POST 4	SU3	.000	.000	.000	.000	5.209	999.000		171.9
POST 2	SU4	999.000	.000	999.000	.000	4.931	999.000		172.6
POST 5	C3	.000	.000	.000	.000	6.702	999.000		187.6
POST 3	C4	999.000	.000	999.000	.000	5.023	999.000		184.1
POST 6	C5	.000	.000	.000	.000	4.622	999.000		184.9

D = clear, unsupported distance between flange components;
d_o = distance between transverse stiffeners;
F_y = yield strength of the web plate.

10.48.8.2 If a girder panel is controlled by equation 10-114 and subjected to simultaneous action of shear and bending moment with the magnitude of the moment higher than $0.75M_u$, the shear shall be limited to not more than:

$$V/V_u = 2.2 - (1.6M/M_u) \qquad (10\text{-}118)$$

10.48.8.3 Where transverse intermediate stiffeners are required, transverse stiffeners shall be spaced at a distance, d_o, according to shear capacity as specified in Article 10.48.8.1, but not more than 3D. Transverse stiffeners may be omitted in those portions of the girders where the maximum shear force is less than the value given by Article 10.48.8.1 (Equation 10-113), subject to the handling requirement below.

Transverse stiffeners shall be required if D/t_w is greater than 150. For panels without longitudinal stiffeners, the spacing of these stiffeners shall not exceed $D[260/(D/t_w)]^2$ to ensure efficient handling, fabrication, and erection of the girders.

For longitudinally stiffened girders, transverse stiffeners shall be spaced a distance, d_o, according to shear capacity as specified in Article 10.48.8.1, but not more than 1.5 times the maximum subpanel depth. The handling requirement given above shall not apply to longitudinally stiffened girders. The total web depth D shall be used in determining the shear capacity of longitudinally stiffened girders in Article 10.48.8.1 and in Equation (10-119).

The first stiffener space at the simple support end of a transversely or longitudinally stiffened girder shall be such that the shear force in the end panel will not exceed the plastic or buckling shear force given by the following equation:

$$V = CV_p \qquad (10\text{-}119)$$

For transversely stiffened girders, the maximum spacing of the first transverse stiffener is limited to 1.5D. For longitudinally stiffened girders, the maximum spacing of the first transverse stiffener is limited to 1.5 times the maximum subpanel depth.

10.49 UNSYMMETRICAL BEAMS AND GIRDERS

10.49.1 General

For beams and girders symmetrical about the vertical axis of the cross section but unsymmetrical with respect to the horizontal centroidal axis, the provisions of Articles 10.48.1 through 10.48.4 shall be applicable.

10.49.2 Unsymmetrical Sections with Transverse Stiffeners

Girders with transverse stiffeners shall be designed and evaluated by the provisions of Article 10.48.5 except that when D_c, the clear distance between the neutral axis and the compression flange, exceeds D/2 the web thickness, t_w, shall meet the requirement:

$$\frac{D_c}{t_w} \le \frac{18{,}250}{\sqrt{F_y}} \qquad (10\text{-}120)$$

10.49.3 Longitudinally Stiffened Unsymmetrical Sections

10.49.3.1 Longitudinal stiffeners shall be required on unsymmetrical sections when the web thickness is less than that specified by Articles 10.48.5.1 or 10.49.2.

10.49.3.2 For girders with one longitudinal stiffener and transverse stiffeners, the provisions of Article 10.48.6 for symmetrical sections shall be applicable provided that:

(a) When D_c exceeds D/2, the longitudinal stiffener is placed $2D_c/5$ from the inner surface or the leg of the compression flange element.
(b) When D_c exceeds D/2, the web thickness, t_w, shall meet the requirement:

$$\frac{D_c}{t_w} \le \frac{36{,}500}{\sqrt{F_y}} \qquad (10\text{-}121)$$

10.49.4 Unsymmetrical Braced Noncompact Sections

Unsymmetrical braced, noncompact rolled or fabricated I-shaped beams and fabricated girders shall be designed and evaluated by the provisions of Article 10.48.2.1.

10.49.5 Unbraced Unsymmetrical Sections

Unsymmetrical sections which do not satisfy the lateral bracing requirements of Article 10.48.2.1(c) shall be designed and evaluated by the provisions of Article 10.48.4.1.

10.50 COMPOSITE BEAMS AND GIRDERS

Composite beams and girders shall be so proportioned that the criteria on the next page are satisfied.

(a) The maximum strength of any section shall not be less than the sum of the computed moments at that section multiplied by the appropriate load factors.
(b) The web of the steel section shall be designed to carry the total external shear and must satisfy the applicable provisions of Articles 10.48 and 10.49. In such application the value of D_c shall be taken as the clear distance between the neutral axis of the composite section for live loads and the compression flange.
(c) The ratio of the projecting top compression flange plate width to thickness shall not exceed the value determined by the formula:

$$\frac{b'}{t} = \frac{2{,}200}{\sqrt{1.3 f_{d\ell}}} \qquad (10\text{-}122)$$

where $f_{d\ell}$ is the top-flange compressive stress due to noncomposite dead load.
(d) The maximum moment capacity of noncompact sections when considering noncomposite dead loads with a load factor of $\gamma = 1.3$ shall be computed by Article 10.48.4.1, except that D_c/t_w of the steel section may exceed $\frac{18{,}250}{\sqrt{F_y}}$ but D/t_w shall not exceed $\frac{36{,}500}{\sqrt{F_y}}$ for girders without longitudinal stiffeners. D_c/t_w of the steel section shall not exceed $\frac{36{,}500}{\sqrt{F_y}}$ for girders with longitudinal stiffeners.
(e) The maximum shear due to noncomposite dead load with a load factor of $\gamma = 1.3$ shall not exceed the shear buckling capacity of the web in Article 10.48.8.1 (Equation 10-112).
(f) The moment capacity at first yield shall be computed considering the application of the dead and live loads to the steel and composite sections.
(g) The casting or placing sequence for the composite concrete deck should be considered in meeting the requirements of Articles 10.50(c), 10.50(d), and 10.50(e).

10.50.1 Positive Moment Sections of Composite Beams and Girders

10.50.1.1 Compact Sections

The maximum strength, M_u, of compact composite beams and girders in the positive-moment regions shall be computed in accordance with Article 10.50.1.1.2. The stress-strain diagram of the steel shall exhibit a yield plateau followed by a strain-hardening range.

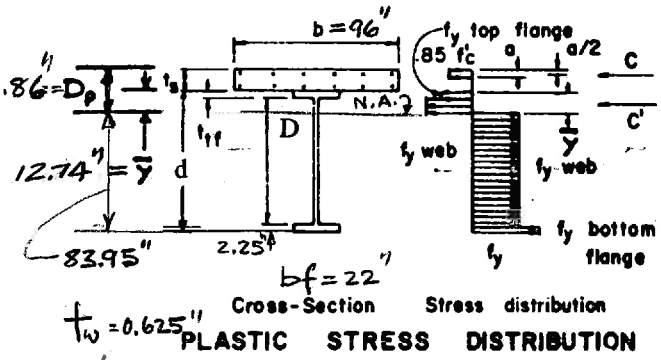

$t_s = 8"$
$t_f = 1.44"$
$t_b = 2.12$

FIGURE 10.50A

Steels such as AASHTO M 270 Grades 36, 50, and 50W (ASTM A 709 Grades 36, 50, and 50W) meet these requirements.

10.50.1.1.1 The resultant moment of the fully plastic stress distribution (Figure 10.50A) may be computed as follows:

(a) The compressive force in the slab, C, is equal to the smallest of the values given by the following Equations:

(1) $$C = 0.85 f'_c\, b t_s + (AF_y)_c \qquad (10\text{-}123)$$

where b is the effective width of slab, specified in Article 10.38.3, t_s is the slab thickness, and $(AF_y)_c$ is the product of the area and yield point of that part of reinforcement which lies in the compression zone of the slab.

(2) $$C = (AF_y)_{bf} + (AF_y)_{tf} + (AF_y)_w \qquad (10\text{-}124)$$

where $(AF_y)_{bf}$ is the product of area and yield point for bottom flange of steel section (including cover plate if any), $(AF_y)_{tf}$ is the product of area and yield point for top flange of steel section, and $(AF_y)_w$ is the product of area and yield point for web of steel section.
(b) The depth of the stress block is computed from the compressive force in the slab.

$$a = \frac{C - (AF_y)_c}{0.85 f'_c b} \qquad (10\text{-}125)$$

(c) When the compressive force in the slab is less than the value given by Equation (10-123), the top portion of the steel section will be subjected to the compressive force on the next page:

124

$$C' = \frac{\Sigma(AF_y) - C}{2} \qquad (10\text{-}126)$$

(d) The location of the neutral axis within the steel section measured from the top of the steel section may be determined as follows:

for $C' < (AF_y)_{tf}$

$$\bar{y} = \frac{C'}{(AF_y)_{tf}} t_{tf} \qquad (10\text{-}127)$$

for $C' \geq (AF_y)_{tf}$

$$\bar{y} = t_{tf} + \frac{C' - (AF_y)_{tf}}{(AF_y)_w} D \qquad (10\text{-}128)$$

(e) The maximum strength of the section in bending is the first moment of all forces about the neutral axis, taking all forces and moment arms as positive quantities.

10.50.1.1.2 Composite beams and girders in positive-moment regions shall qualify as compact when the web of the steel section satisfies the following requirement:

$$\frac{2D_{cp}}{t_w} \leq \frac{19{,}230}{\sqrt{F_y}} \qquad (10\text{-}129)$$

where D_{cp} is the depth of the web in compression at the plastic moment calculated in accordance with Article 10.50.1.1.1, and t_w is the web thickness. Equation (10-129) is satisfied if the neutral axis at the plastic moment is located above the web; otherwise D_{cp} shall be computed as $\bar{y}$ from Equation (10-128) minus t_{tf}. Also, the distance from the top of the slab to the neutral axis at the plastic moment, D_p, shall satisfy:

$$\left(\frac{D_p}{D'}\right) \leq 5 \qquad (10\text{-}129a)$$

where:

$D' = \beta \dfrac{(d + t_s + t_h)}{7.5}$;

β = 0.9 for F_y = 36,000 psi;
= 0.7 for F_y = 50,000 psi;

d = depth of the steel beam or girder;

t_s = thickness of the slab;

t_h = thickness of the concrete haunch above the beam or girder top flange.

Equation (10-129a) need not be checked for sections where the maximum flange stress does not exceed the specified minimum flange yield stress.

The maximum bending strength, M_u, of compact composite beams and girders in simple spans or in the positive-moment regions of continuous spans with compact noncomposite or composite negative-moment pier sections shall be taken as:

for $D_p \leq D'$

$$M_u = M_p \qquad (10\text{-}129b)$$

for $D' < D_p \leq 5D'$

$$M_u = \frac{5M_p - 0.85M_y}{4} + \frac{0.85M_y - M_p}{4}\left(\frac{D_p}{D'}\right) \qquad (10\text{-}129c)$$

where:

M_p = plastic moment capacity of the composite positive moment section calculated in accordance with Article 10.50.1.1.1;

M_y = moment capacity at first yield of the composite positive moment section calculated as F_y times the section modulus with respect to the tension flange. The modular ratio, n, shall be used to compute the transformed section properties.

In continuous spans with compact composite positive-moment sections, but with noncompact noncomposite or composite negative-moment pier sections, the maximum bending strength, M_u, of the composite positive-moment sections shall be taken as either the moment capacity at first yield determined as specified in Article 10.50(f), or as:

$$M_u = M_y + A(M_u - M_s)_{pier} \qquad (10\text{-}129d)$$

where:

M_y = the moment capacity at first yield of the compact positive moment section calculated in accordance with Article 10.50(f);

$(M_u - M_s)_{Pier}$ = Moment capacity of the noncompact section at the pier, M_u, given by Article 10.48.2 or Article 10.48.4, minus the elastic moment at the pier, M_s, for the loading producing maximum positive bending in the span. Use the smaller value of the difference for the two-pier sections for interior spans;

A = 1 for interior spans;
= Distance from end support to the location of maximum positive moment divided by the span length for end spans.

M_u computed from Equation (10-129d) shall not exceed the applicable value of M_u computed from either Equation (10-129b) or Equation (10-129c).

For continuous spans where the maximum bending strength of the positive-moment sections is determined

from Equation (10-129d), the maximum positive moment in the span shall not exceed M_y, for the loading which produces the maximum negative moment at the adjacent pier(s).

For composite sections in positive-moment regions not satisfying the requirements of Equation (10-129) or Equation (10-129a), M_u shall be determined as specified in Article 10.50.1.2.

10.50.1.2 Noncompact Sections

10.50.1.2.1 When the steel section does not satisfy the compactness requirements of Article 10.50.1.1.2 the maximum bending strength, M_u, of the section shall be taken as the moment at first yield determined as specified in Article 10.50(f).

10.50.1.2.2 When the girders are not provided with temporary supports during the placing of dead loads, the sum of the stresses produced by $1.30D_s$ acting on the steel girder alone with $1.30(D_c + 5(L + I)/3)$ acting on the composite girder shall not exceed yield stress at any point, where D_s and D_c are the moments caused by the dead load acting on the steel girder and composite girder, respectively.

10.50.1.2.3 When the girders are provided with effective intermediate supports that are kept in place until the concrete has attained 75 percent of its required 28-day strength, stresses produced by the loading, $1.30(D + 5(L + I)/3)$, acting on the composite girder, shall not exceed yield stress at any point.

10.50.2 Negative Moment Sections of Composite Beams and Girders

The maximum bending strength, M_u, of composite beams and girders in the negative moment regions shall be computed in accordance with Articles 10.48 and 10.49 as applicable. It shall be assumed that the concrete slab does not carry tensile stresses. In cases where the slab reinforcement is continuous over interior supports, the reinforcement may be considered to act compositely with the steel section.

10.50.2.1 Compact Sections

Composite beams and girders in negative bending qualify as compact when their steel section meets the requirements of Article 10.48.1.1, and the stress-strain diagram of the steel exhibits a yield plateau followed by a strain hardening range. Steels such as AASHTO M 270 Grades 36, 50, and 50W (ASTM A 709, Grades 36, 50, and 50W) meet these requirements. M_u shall be computed as the resultant moment of the fully plastic stress distribution acting on the section including any composite rebars.

If the distance from the neutral axis to the compression flange exceeds D/2, the compact section requirements given by Equations (10-93) and (10-94) must be modified by replacing D with the quantity $2D_{cp}$, where D_{cp} is the depth of the web in compression at the plastic moment.

10.50.2.2 Noncompact Sections

When the steel section does not satisfy the compactness requirements of Article 10.50.2.1 but does satisfy the requirements of Article 10.48.2.1, the maximum strength, M_u, of the section shall be taken as the moment at first yielding determined as specified in Article 10.50(f). If the requirements of Article 10.48.2.1(b) or Article 10.48.2.1(c) are not satisfied, M_u shall be calculated according to the provisions specified in Article 10.48.4.1. In this case, the web slenderness shall not exceed the requirement given by Equation (10-103) or Equation (10-108), as applicable, subject to the corresponding requirements of Article 10.49.2 or 10.49.3.

10.50.2.3

In the negative moment regions of continuous spans, the minimum longitudinal reinforcement including the longitudinal distribution reinforcement must equal or exceed 1 percent of the cross-sectional area of the concrete slab. Two-thirds of this required reinforcement is to be placed in the top layer of slab within the effective width. Placement of distribution steel as specified in Article 3.24.10 is waived within the effective width.

10.50.2.4

When shear connectors are omitted from the negative moment region, the longitudinal reinforcement shall be extended into the positive moment region beyond the anchorage connectors at least 40 times the reinforcement diameter.

10.51 COMPOSITE BOX GIRDERS*

This section pertains to the design of simple and continuous bridges of moderate length supported by two or more single-cell composite box girders. The distance cen-

*For information regarding the design of long-span steel box girder bridges, Report No. FHWA-TS-80-205, "Proposed Design Specifications for Steel Box Girder Bridges" is available from the Federal Highway Administration.

STATE OF FLORIDA DEPARTMENT OF TRANSPORTATION	Subject: BRIDGE NO 770074	Sheet 1 of 11	WPI No.
	STEEL PLATE GIRDER	Project No.	
		Prepared by	Date
	AASHTO 1996	Checked by	Date

AT POINT 1.5

CHECK COMPACT SECTION AASHTO 10.48.1 Pg 278

a) $\frac{b'}{t} \leq \frac{2055}{\sqrt{F_y}}$ $F_y = 50{,}000$ psi

$b' = (20.5 - 0.625)/2$

$= 9.437''$

$t = 1.437''$

$\frac{b'}{t} = \frac{9.937}{1.437} = 6.96'' < \frac{2055}{\sqrt{50000}} = 9.190''$

b) $\frac{D}{t_w} \leq \frac{19{,}230}{\sqrt{F_y}}$

$\frac{93}{0.625} = 148.8 > \frac{19230}{\sqrt{50{,}000}} = 86.0$

SECTION IS NOT COMPACT. (WHEN NON-COMPOSITE)

THE GIRDER HAS LATERAL BRACING

10.48.2 CHECK BRACED NONCOMPACT SECTION Pg 279

a) $\frac{b'}{t} \leq \frac{2200}{\sqrt{F_y}}$; $6.96'' < 9.84''$

b) $\frac{D_c}{t_w} \leq \frac{15400}{\sqrt{F_y}}$

USE DYER RIDDLE DESIGN CALC'S
MILLS & PRECOURT, INC.

	Subject:	Sheet 2 of 11	WPI No.
		Project No.	
		Prepared by	Date
		Checked by	Date

TO DETERMINE Dc. AT POINT 1.5

$A = (20.5 \times 1.44) + (93 \times 0.625) + 22 \times 2.25$ (IN^2)

$= 137.14 \ IN^2$

$\bar{Y} = \dfrac{29.52(95.97) + 58.12(48.75) + 49.5(1.125)}{137.14}$

$= 41.72''$

$Dc = 54.97'' - 1.44'' = 53.53''$

$\dfrac{53.53}{0.625} \leq \dfrac{15400}{\sqrt{50000}}$

$85.64 > 68.87$

c) $L_b \leq \dfrac{20000000 \, A_f}{F_{yd}}$

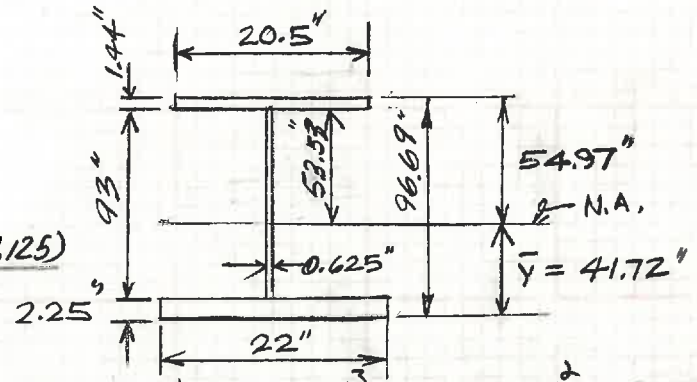

$I_{N.A.} = \frac{1}{12}(20.5)(1.44)^3 + 29.52(54.25)^2$ | 86884.31
$+ \frac{1}{12}(0.625)(93)^3 + 58.12(7.03)^2$ | 44765.94
$+ \frac{1}{12}(22)(2.25)^3 + 49.5(40.59)^2$ | 81574.51

$= 213{,}224.76 \ IN^4$

$S_{xc} = \dfrac{213{,}224.76}{54.97} = 3{,}878.93 \ IN^3$

$I_{yc} = \frac{1}{12}(1.44)(20.5)^3$

$= 1033.81 \ IN^4$

$23.25' > \dfrac{20{,}000{,}000 \, (20.5 \times 1.44)}{50{,}000 \, (96.69)} = 122.12'' = 10.17'$

SECTION 10.48.2 DID NOT MEET THE CRITERIA.

Subject:	Sheet 3 of 11	WPI No.
	Project No.	
	Prepared by	Date
	Checked by	Date

CHECK SECTION 10.48.4 UNBRACED SECTION. Pg 280

$M_u = M_r R_b$

$$R_b = 1 - 0.002\left(\frac{D_c T_w}{A_{fc}}\right)\left(\frac{D_c}{t_w} - \frac{\lambda}{\sqrt{\frac{M_r}{S_{xc}}}}\right) \leq 1.0$$

$\frac{M_r}{S_{xc}} = F_y$

$\lambda = 12{,}500$ FOR $A_{fc} < A_{ft}$ Pg 280

$\frac{D_c}{t_w} = 85.64$ Sh 2

$$\frac{\lambda}{\sqrt{F_y}} < \frac{D_c}{t_w} \leq \frac{18{,}250}{\sqrt{F_y}}$$

$$\frac{\lambda}{\sqrt{F_y}} = \frac{12500}{\sqrt{50{,}000}} = 55.9$$

$$\frac{18{,}250}{\sqrt{F_y}} = \frac{18{,}250}{\sqrt{50{,}000}} = 81.6$$

$\frac{D_c}{t_w} > \frac{18{,}250}{\sqrt{F_y}}$ $85.6 > 81.6$ CHECK 10.50 d Pg 284

$\frac{D_c}{t_w} > \frac{18{,}250}{\sqrt{F_y}} \not> \frac{36{,}500}{\sqrt{F_y}}$ $85.64 > 81.6 \not> 163.23$

10.50 (g) THE CASTING OR PLACING SEQUENCE FOR THE COMPOSITE CONCRETE DECK SHOULD BE CONSIDERED IN MEETING THE REQUIREMENTS OF ARTICLES 10.50(c), 10.50(d) 10.50(e)

$\frac{18{,}250}{\sqrt{F_y}}$ MAY BE WAIVED FOR COMPOSITE GIRDERS Pg 281

Subject:	Sheet 4 of 11	WPI No.
	Project No.	
	Prepared by	Date
	Checked by	Date

$L_b = 23.25'$ Pg 280

$L_p = 9500\, r'/\sqrt{F_y}$

r' = RADIUS OF GYRATION OF COMPR. FRANGE ABOUT THE VERTICAL AXIS IN THE PLANE OF WEB

$$r' = \sqrt{\frac{1/12\,(20.5)^3(1.44)}{20.5\,(1.44)}} = 5.92''$$

$$L_p = \frac{9500(5.92'')}{\sqrt{50{,}000}}$$

$= 251.51''$

$= 20.95'$

$L_b = 23.25' > L_p = 20.95'$

$S_{xc} = 3878.93$ IN^3 Sh 2

$d = 96.69$ IN Sh 2.

$$L_r = \left(\frac{572\times10^6\, I_{yc}\, d}{F_y S_{xc}}\right)^{1/2}$$

$$I_{yc} = \frac{1}{12}(20.5)^3(1.44) = 1033.81 \text{ IN}^4$$

$$L_r = \left(\frac{572\times10^6(1033.81)(96.69)}{50{,}000(3878.93)}\right)^{1/2} = 542.96'' = 45.25'$$

$L_r = 45.25 > L_b = 23.25' > L_p = 20.95'$ Pg 280

$$M_r = C_b F_y S_{xc}\left[1-0.5\left(\frac{L_b-L_p}{L_r-L_p}\right)\right]$$ Pg 280 AASHTO 1996

$$C_b = 1.75 + 1.05\left(\frac{M_1}{M_2}\right) + 0.3\left(\frac{M_1}{M_2}\right)^2 \leq 2.3$$ Pg 280

Beam IN Single curve M_1/M_2 = −

$M_1 = D_L M = 10{,}104.9$ FK. Pg II 103 DESIGN CAL.

AT 1.50
BARS = 10,422.24

$M_2 = D_L M = 10{,}529.7$ FK Pg II 103 "

$$C_b = 1.75 + 1.05\left(-\frac{10{,}104.9}{10{,}529.7}\right) + 0.3\left(-\frac{10104.9}{10529.7}\right)^2$$

$= 1.75 - 1.0076 + 0.276$

$= 1.018 < 2.3$ SO IS OK

Subject:	Sheet 5 of 11	WPI No.
	Project No.	
	Prepared by	Date
	Checked by	Date

$$M_r = 1.108(50)(3878.93)\left[1-0.5\left(\frac{23.25-20.95}{44.62-20.95}\right)\right]\times\frac{1}{12}$$

$$= 17{,}037.68 \text{ fK}$$

$$M_y = S_{xc}F_y = 3878.93(50)\frac{1}{12}$$

$$= 16{,}162.21 \text{ fK}$$

$$M_y < M_r$$

$\therefore$ USE $M_r = 16{,}162.21$ fK

NEW $\rightarrow$ $$R_b = 1-0.002\left(\frac{D_c t_w}{A f_c}\right)\left[\frac{D_c}{t_w}-\frac{\lambda}{\sqrt{\frac{M_r}{S_{xc}}}}\right] \leq 1.0$$

.0022 85.648 55.901

$$= 1-0.002\left(\frac{53.53\times0.625}{20.5(1.44)}\right)\left[\frac{53.53}{0.625}-\frac{12500}{\sqrt{\frac{16162.21\times12000}{3878.93}}}\right]$$

29.947

$$= 1-0.067$$

$$= 0.932 < 1 \quad \text{OK}$$

$$M_u = R_b M_r = 0.932(16162.21)$$

$$= 15{,}063.18 \text{ fK}.$$

M_{DL} AT 1.50 $= M_2 = 10{,}529.7$ fK — Pg II-103

$M_u = 10{,}529.7(1.3) = 13{,}688.61$ fK $< 15{,}063.18$ fK

SECTION IS OK

Subject:	Sheet 6 of 11	WPI No.
	Project No.	
	Prepared by	Date
	Checked by	Date

PLASTIC SECTION MODULUS Z AT POINT 1.5 (MIDSPAN)

AASHTO 1996 APPENDIX D P 638

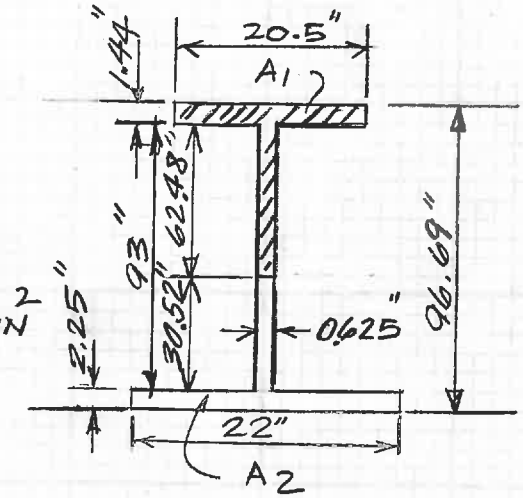

		AREA
TOP FLANGE	= 20.5 × 1.44 =	29.52
WEB	= 93 × 0.625" =	58.12
Bott FLANGE	= 22 × 2.25 =	49.50
		137.14 IN^2

$$A_1 = A_2 = \frac{137.14}{2} = 68.57 \text{ IN}^2$$

PORTION OF WEB INCLUDED IN A_1 $= \frac{68.57 - 29.52}{0.625} = 62.48"$

TO DETERMINE CENTROID OF A_1 REF TO TOP FLANGE

	SECTION	A	Y	AY
TOP FLANGE	20.5×1.44	29.52	0.72"	21.25
WEB	62.48×0.625	39.05	32.68	1276.15
		68.57		1297.4

$$\bar{Y}_{TOP} = \frac{1297.4}{68.57} = 18.92"$$

CENTROI OF A2 REF. AT BOTT FLANGE

	SECTION	A	Y	AY
BOTT. FLANGE	22×2.25	49.5	1.125	55.68
WEB	30.52×0.625	19.07	17.51	333.91
		68.57		389.59

$$\bar{Y}_{AT\ BOTT} = \frac{389.59}{68.57} = 5.68"$$

$a = 96.69 - 18.92 - 5.68$
$= 72.09$ IN

$$Z = A_1(a) = 68.57 \times 72.09 = \underline{4943.21 \text{ IN}^3}$$

	Subject:	Sheet 7 of 11	WPI No.
		Project No.	
		Prepared by	Date
		Checked by	Date

COMPOSITE SECTION AT MID SPAN

CHECK AASHTO SECTION 10.50.1.1 Pg 284

COMPACT SECTION

Pg 266

$\frac{1}{4}(207.25)(12) = 621.75''$

$12' \times 12 = 144''$

$12 \times 8 = 96''$ ✓

a) 1. $C = 0.85 f_c' b t_s + (AF_y)_c$

$C = 0.85(4.5)(96)(8) + (4.65 \times 60)$ 279

$= \underline{3216.6 \text{ K} \leftarrow \text{CONTROL}}$

$b_f = 22 \times 2.25 = 49.50 \text{ IN}^2$

$t_f = 20.5 \times 1.44 = 29.52 \text{ IN}^2$

$W = 93 \times 0.625 = 58.12 \text{ IN}^2$

2. $C = (AF_y)b_f + (AF_y)t_f + (AF_y)_w$

$= (49.50 \times 50) + (29.52 \times 50) + (58.12 \times 50)$

$= 2475 + 1476 + 2906$

$= 6857^K$

b) $a = \dfrac{C - (AF_y)_c}{0.85 f_c' b}$

$= \dfrac{3216.6 - 279}{0.85 \times 4.5 \times 96} = 8.0''$

c) $C' = \dfrac{\Sigma(AF_y) - C}{2}$

$= \dfrac{6857 - 3216.6}{2}$

$= 1820.2$

$(AF_y)t_f = 29.52 \times 50 = 1476$

$C' > (AF_y)t_f$ P 285

Subject:	Sheet 8 of 11	WPI No.
	Project No.	
	Prepared by	Date
	Checked by	Date

$$\bar{y} = t_{tf} + \frac{C' - (AF_y)_{tf}}{(AF_y)_w}(D)$$ P 285

$D = 93''$

$$= 1.44 + \left(\frac{1829.2 - 1476}{2906}\right) \cdot 93$$ 1820.2

$$= 1.44 + 11.30$$

$$= 12.74''$$ 12.45''

$$\frac{2D_{cp}}{t_w} \leq \frac{19230}{\sqrt{F_y}}$$

$$\frac{2(12.74 - 1.44)}{0.625} = 36.16 < 86$$ 12.45 t_f 35.23

$$\frac{D_p}{D'} \leq 5$$ (10-129a) P 285

$$D' = \frac{B(d + t_s + t_h)}{7.5}$$ P 285

From BARS CODING CARD 14

$d = 96.69''$ $t_h = 2.12$

$$= 0.7\,\frac{(96.69 + 8 + 2.12)}{7.5}$$

$$= 9.96''$$

$$D_p = t_s + t_h + \bar{y}$$

$$= 8 + 2.12 + 12.74$$ 12.45

$$= 22.86''$$ 22.57

$$\frac{D_p}{D'} = \frac{22.86}{9.96} = 2.29 < 5$$ 22.57 2.26

∴ SECTION IS COMPACT (WHEN COMPOSITE)

	Subject:	Sheet 9 of 11	WPI No.
		Project No.	
		Prepared by	Date
		Checked by	Date

SINCE $(D_P = 22.86'') > (D' = 9.96'')$

$D' < D_P \leq 5D'$ $\quad 9.96'' < \cancel{22.86}\ 22.57 < 5(9.96) = 49.8''$

$$M_U = \frac{5M_P - 0.85M_Y}{4} + \frac{0.85M_Y - M_P}{4}\left(\frac{D_P}{D'}\right)$$ Pg 285

WHERE

$$M_Y = 1.3(M_{DL} + M_{SDL}) + 2.17\left[50\ \text{KSI} - \frac{1.3M_{DL}}{S_{\infty}} - \frac{1.3M_{SDL}}{S_{3N}}\right)\frac{S_N}{2.17}$$

$$= 1.3(10422.24^* + 1532.87^*) + 2.17\left[50 - \frac{1.3 \times 10422.24^* \times 41.70^*}{21{,}309.0^*}\right.$$ 2.65

$$\left. - \frac{1.3 \times 1532.87 \times 53.16^*}{308{,}390.1^*}\right]\frac{420{,}630.7^*}{66.64^*}\left(\frac{1}{2.17}\right)\left(\frac{FT}{12}\right)$$ 0.34

* FROM BARS AT 1.50

$$= 15{,}541.64 + 2.17\left[50 - 2.65 - 0.34\right]\frac{420630.7}{66.64}\left(\frac{1}{2.17}\right)\frac{FT}{12}$$

$$= 15{,}541.64 + 24{,}727.20$$

$$= 40{,}268.84\ \text{ft K.}$$

$$M_P = \Big\{\underbrace{(A_{BF} \times F_Y)\, d_{N.A\,BF}}_{\text{BOTTOM FLANGE}} + \underbrace{\left[(D_{SD} - D_P - t_{BF})(t_W)(F_Y)\right] d_{NA\,B\,WEB}}_{\text{WEB BELOW N.A}}$$

(overall DEPTH)

$$+ \underbrace{\left[(D_P - t_S - t_{tf})(t_W)F_Y\right] d_{NA\,TW}}_{\text{WEB ABOVE N.A.}} + \underbrace{(A_{TF} \cdot F_Y)\, d_{NA\,TF}}_{\text{TOP FLANGE}}$$

$$+ \underbrace{(0.85 f'_c\, ba.)\, d_{NA\,SLAB}}_{\text{CONCRETE}} + \underbrace{A_S f_S (D_P - 8''/2)}_{\text{REINF. STEEL}}\Big\}\frac{1}{12}$$

	Subject:	Sheet 10 of 11	WPI No.
		Project No.	
		Prepared by	Date
		Checked by	Date

BOTTOM FLANGE BELOW N.A. $= (22 \times 2.25)(50)(83.95 - \frac{2.25}{2})\frac{1}{12} = 17{,}082.65$ ft K

$96.69'' + 2.12 + 8 - 22.86''$ (DP) 22.57

84.83'' 81.70

WEB BELOW N.A. $= (83.95 - 2.25)0.625 \times 50 \times \frac{81.70}{2} \times \frac{1}{12} = 8{,}691.26$ ft K

WEB ABOVE N.A. $= (93.00 - 81.70)(0.625)(50)\frac{11.3}{2}(\frac{1}{12}) = 166.26$ "

11.3

TOP FLANGE $= (20.5 \times 1.44)(50)(12.74 - \frac{1.44}{2})\frac{1}{12} = 1{,}478.46$ "

$\bar{Y}$

CONC. DECK $= [0.85(4.5)(96'')(8'')](22.86 - 8''/2)\frac{1}{12} = 4616.93$ "

REINFORCING STEEL $= (4.65 \times 60)(22.86 - 8''/2)\frac{1}{12} = 438.49$ "

$M_p = 8691.26 + 166.26 + 1478.46 + 4616.93 + 438.49 + 17{,}082.65$

$= 32{,}474.05$ ft K

$M_u = \frac{5(32{,}474.05) - 0.85(40{,}268.84)}{4} + \frac{0.85(40268.84) - 32{,}474.05}{4}\left(\frac{22.86}{9.96}\right)$

$= 32{,}035.43 + 1006.70$

$= 33{,}042.13$ ft K $> 31{,}626$ ft K. DESIGN PLASTIC M.

Pg II-90

THEREFORE USE $M_u = 31{,}626$ ft K

FOR LOAD RATINGS.

	Subject:	Sheet 11 of 11	WPI No.
		Project No.	
		Prepared by	Date
		Checked by	Date

$M_{LL} = 31{,}626$ ft-K FROM DESIGN CALC' Pg II-90

TOTAL $M_{DL} = \overset{M_{DL}}{10{,}422.24} + \overset{M_{SDL}}{1{,}532.87} = 11{,}955.11$ ft-K BARS AT 1.50

AVAILABL CAPACITY FOR LL. INV $= \dfrac{31{,}626 - 1.3(11955.11)}{2.167}$

$= 7{,}422.41$ ft-K

OPERATING $= 5/3(7422.41)$

$= 12{,}370.68$ ft-K

SEE CALC'S OF LOAD RATINGS IN BARS OUTPUT.

5/8" = .625 11/16" = 0.687

BRIDGE ANALYSIS AND RATING SYSTEM
INPUT DATA FORM CONTROL CARDS

DATA UPDATING AND ANALYSIS INITIATION	
CARD TYPE AA DD 99	SEE LEGEND OF CARD TYPES FOR COLUMN HEADERS

MAITLAND BLVD OVER LAKE BOSSE
77002-3503 SR 414
STEEL PLATE GIRDER SPAN 3
(ANY SCALES PROJ. ENGINEER FOR CONSTRUCTION)
A770074S.DAT
IN PDS FILE B7700745
ALSO H DRIVE

LEGEND

CARD TYPE AA

CARD TYPE	BLANK FIELD	NEW OR UPDATE	DELETE x b	ADDITION x b	SELECT x b	PERM FILE OLD NEW b	LIST B T P b
1 2	3 4 5 6 7 8	9 10 11 12 13 14	15	16	17	18 19 20	21
A A	b b b b b b	NEW			X		

CARD TYPE DD

CARD TYPE	STRUCTURE GROUP ID	STRUCTURE NO.	SEQUENCE NUMBER	DELETE x b	BLANK FIELD
1 2	3 4 5	6 7 8	9 10 11 12 13 14	15	16 17 18 19 20 21
D D					b b b b b b

CARD TYPE 99

CARD TYPE	STRUCTURE GROUP ID	STRUCTURE NO.	STRUCTURE GROUP ID	STRUCTURE NO.	BLANK FIELD
1 2	3 4 5	6 7 8	9 10 11	12 13 14	15 16 17 18 19 20 21
9 9	770	074			b b b b b b b

S

BRIDGE ANALYSIS AND RATING SYSTEM
INPUT DATA FORM CARD TYPES 02, 05 AND 06

STRUCTURE HEADER AND DESCRIPTION

CARD TYPE	STRUCTURE GROUP ID	STRUCTURE NO.	RATING ANALYST IDENTIFICATION	ENGR. ATTN.	OVERRULE BATCH RAT. EXCEPT'S (I O P)	OVERRULE FILE REQUESTS & OUTPUT DATA EXCEPTIONS	STRUCTURE TYPE	YEAR OF CONSTRUCTION	STRUCTURE LENGTH Ft	STRUCTURE LENGTH Feet	STRUCTURE LENGTH In	STRUCTURE LENGTH 1/16	ROADWAY WIDTH Ft	ROADWAY WIDTH Feet	ROADWAY WIDTH In	ROADWAY WIDTH 1/16	NUMBER OF SPANS	NEGATE SPEC	LIVE LOAD TRUCK DESIGNATION INV.	LIVE LOAD TRUCK DESIGNATION OPER.
02	770	074					CSC	98	X	70	0	X	11	10	0	06				

STRUCTURE LOCATION AND PERMANENT IDENTIFICATION FACTORS

CARD TYPE	STRUCTURE GROUP ID	STRUCTURE NO.	BRIDGE NUMBER	DISTRICT	COUNTY	CONSTRUCTION ROUTE	CONSTRUCTION SECTION	CONSTRUCTION STATION	MICROFILM REEL NUMBER DESIGN PLANS	MICROFILM REEL NUMBER COMPUTATIONS	MICROFILM REEL NUMBER CORRESPONDENCE	KEY ROUTE ID	MARKED ROUTE
05	770	074		5	117	SR 414	77002	3750	DRMP				

COMMENTS

CARD TYPE	STRUCTURE GROUP ID	STRUCTURE NO.	SEQ	ANALYST REMARKS TO BE DUPLICATED IN FORM AND CONTENT ON SUMMARY OF RATING CALCULATIONS
06	770	074	1	MAITLAND BLVD OVER LAKE BOSSE
06	770	074	2	G01=G1R.25 SPAN 3 STEEL PLATE GIRDER FY=50,000 PSI. DESIGN LOAD HS20
06	770	074	3	USED AASHTO LLDF
06			4	
06			5	
06			6	

BRIDGE ANALYSIS AND RATING SYSTEM
INPUT DATA FORM CARD TYPE 07

SPECIFICATIONS GENERALLY APPLICABLE TO MEMBERS OF A STRUCTURE

CARD TYPE	STRUCTURE GROUP ID	STRUCTURE NO.	STRUCT. STEEL Fy lbs / sq. in.	REINFORCED CONCRETE Fy lbs / sq. in.	REINFORCED CONCRETE f'c lbs / sq. in.	COMPOSITE STEEL AND CONCRETE Fy lbs / sq. in.	COMPOSITE STEEL AND CONCRETE f'c lbs / sq. in.	PRESTRESSED CONCRETE LOSS kips / sq. in.	PRESTRESSED CONCRETE E_g/E_s *	PRESTRESSED CONCRETE f's kips / sq. in.	PRESTRESSED CONCRETE f"c lbs / sq. in.	MAXIMUM IMPACT FACTOR XX% INV	MAXIMUM IMPACT FACTOR XX% OP	MAXIMUM IMPACT FACTOR XX% POST	MAXIMUM IMPACT FACTOR XX% SPEC	MINIMUM IMPACT FACTOR XX% INV	MINIMUM IMPACT FACTOR XX% OP	MINIMUM IMPACT FACTOR XX% POST	MINIMUM IMPACT FACTOR XX% SPEC	MATERIAL STRENGTH TIMBER	MATERIAL STRENGTH TIMBER f_b lbs / sq. in.
1 2	3 4 5	6 7 8	9 10 11 12 13	14 15 16 17 18	19 20 21 22 23	24 25 26 27 28	29 30 31 32 33	34 35 36 37 38	39 40 41 42 43	44 45 46 47 48	49 50 51 52 53	54 55 56 57 58	59 60 61	62 63 64 65 66	67 68 69	70 71 72 73 74	75 76 77 78 79		
07	770	074				50	004500												
07																			
07																			
07																			
07																			
07																			
07																			
07																			
07																			
07																			
07																			
07																			
07																			
07																			
07																			
07																			
07																			
07																			
07																			

* $\frac{E_{girder}}{E_{slab}}$

$L = 210 - 2(1.375) = 207.25'$

BRIDGE ANALYSIS AND RATING SYSTEM
INPUT DATA FORM CARD TYPE 08

MEMBER DESCRIPTION SPECIFICATIONS – GIRDER, STRINGER, FLOOR BEAM

CARD TYPE	STRUCTURE GROUP ID	STRUCTURE NO.	MEMBER ID GI SI BI NO.	CONTINUE	TOTAL NO. OF SPANS	CANTIL. FLR. BM.	ANALYSIS CNTRL	SYMMETRICAL	SPAN 1 4 F	SPAN 1 4 Feet	SPAN 1 4 In	SPAN 1 4 1/16	SPAN 2 5 F	SPAN 2 5 Feet	SPAN 2 5 In	SPAN 2 5 1/16	SPAN 3 6 F	SPAN 3 6 Feet	SPAN 3 6 In	SPAN 3 6 1/16	SS RC CSC PSC CPS TMB	Fy psi	f'a ksi	f'bs	f'c	f"c lbs/sq. in.	LIVE LOAD DISTRIB. FACTOR "E" or "S" in Feet	END FLOOR BEAM	THROUGH	MAXIMUM IMPACT FACTOR XX% INV	OP	POST	SPEC	STIFFENER CODE
0,8	770	074	601		01				X	207	25	00																						
0,8																					CSC						2.182							X
0,8																																		
0,8																																		
0,8																																		
0,8																																		
0,8																																		
0,8																																		
0,8																																		
0,8																																		
0,8																																		
0,8																																		
0,8																																		
0,8																																		
0,8																																		
0,8																																		
0,8																																		
0,8																																		
0,8																																		
0,8																																		
0,8																																		
0,8																																		

$12/5.5 = 2.182$

11.625

BRIDGE ANALYSIS AND RATING SYSTEM
INPUT DATA FORM CARD TYPE 09

RATING POSITION SPECIFICATIONS

CARD TYPE	STRUCTURE GROUP ID	STRUCTURE NO.	MEMBER ID G S B	MEMBER ID NO.	RATING POSITION LOCATION SP PP	DISTANCE FROM LEFT SUPPORT F I	Feet	In	1/16	MVB	MOM. IN FT-KIPS SHEAR IN KIPS SECTION CAPACITY i	CAPACITY REDUCT. DUE TO DL i	RATING POSITION LOCATION SP PP	DISTANCE FROM LEFT SUPPORT F I	Feet	In	1/16	MVB	MOM. IN FT-KIPS SHEAR IN KIPS SECTION CAPACITY i	CAPACITY REDUCT. DUE TO DL i
09	77	07	46	91		X		5	18	125	B				X		9	2	0	B
09																				
09						X		9	2	0	B				X		11	5	25	0 0 B
09																				
09																				
09																				
09																				
09																				
09																				
09																				
09																				
09																				
09																				
09																				
09																				
09																				
09																				
09																				
09																				
09																				
09																				
09																				

BRIDGE ANALYSIS AND RATING SYSTEM
INPUT DATA FORM CARD TYPE 10

SUPERIMPOSED DEAD LOADS - GIRDERS, STRINGERS, FLOOR BEAMS

CARD TYPE	STRUCTURE GROUP ID	STRUCTURE NO.	MEMBER ID G S B NO.	SYMMETRICAL x b	SPAN NO.	DISTANCE FROM LEFT SUPPORT IN SPAN F Feet In 1/16	LOAD TYPE P W V	DISTRIBUTED OR CONCENTRATED LOAD "P" in KIPS "W" in LBS/FT P or W_L	W_R	LENGTH (DISTRIBUTED) F Feet In 1/16
1 2	3 4 5	6 7 8	9 10 11	12	13 14	15 16 17 18 19 20 21 22 23 24 25 26 27 28 29 30 31	32 33	34 35 36 37 38 39 40 41 42 43	44 45 46 47 48 49 50 51 52 53	
10	770	074	601		01					
10							W	285.5		X 2071 25 10
10										
10										
10										
10										
10										
10										
10										
10										
10										
10										
10										
10										
10										
10										
10										
10										
10										
10										
10										

See Coding IN PRESTRESSED BEAM

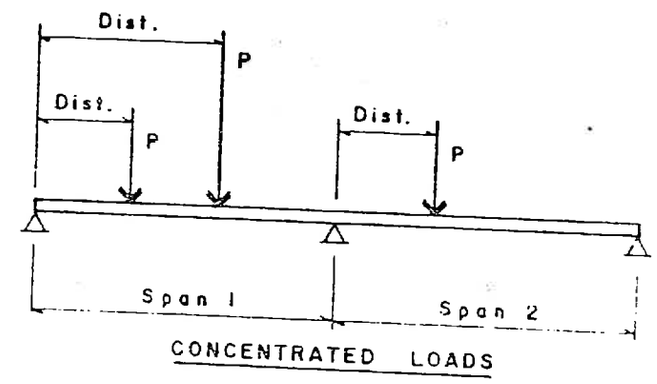

CONCENTRATED LOADS

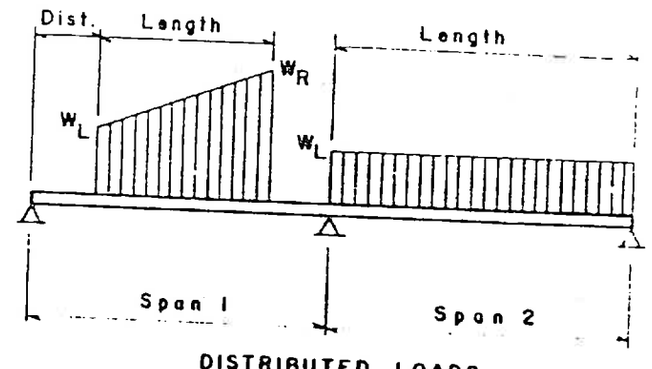

DISTRIBUTED LOADS

40.9583
16

125.3334

BRIDGE ANALYSIS AND RATING SYSTEM
INPUT DATA FORM CARD TYPE 11

SECTION RANGE SPECIFICATIONS

CARD TYPE	STRUCTURE GROUP ID	STRUCTURE NO.	MEMBER ID (GI SI NO. BI)	SYMMETRICAL (X)	SPAN NO.	RANGE NO.	SECTION RANGE: RANGE LENGTH F I Feet In 1/16	SEC NO. Lt.	SEC NO. Rt.	SEC VAR SPTTb	SEC VAR TBb	CODE 1 2 b	HINGE LOCATION: FIRST HINGE DISTANCE FROM LEFT F I Feet In 1/16	SECOND HINGE DISTANCE FROM LEFT F I Feet In 1/16	HYBRID GIRDER: YIELD STRENGTH: BASE SECTION Ab Fy (psi) i	EXCEPTION TWBb Fy (psi) i
1 2	3 4 5	6 7 8	9 10 11	12	13 14	15 16	17 18 19 20 21 22 23 24 25 26	27 28	29 30	31	32	33	34 35 36 37 38 39 40 41 42 43	44 45 46 47 48 49 50 51 52 53	54 55 56 57 58 59 60	61 62 63 64 65 66 67
1 1	7700	746	01		01	01	X 2495 83	01								
1 1			S			02	X 160 0	02								
1 1	7700	746	01			03	X 1253 33 4	03								
1 1						04	X 160 0	02								
1 1	7700	746	01		01	05	X 2495 83	01								

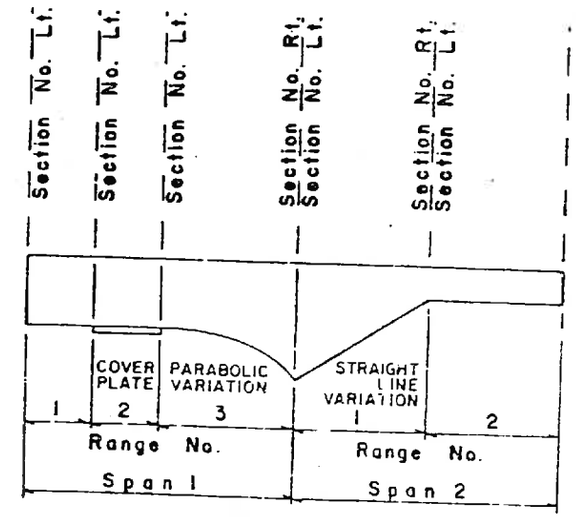

SECTION RANGE

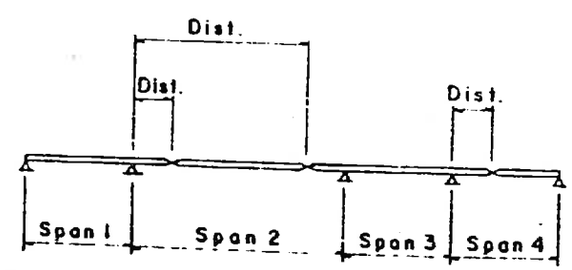

INTERMEDIATE HINGES

207.25
125.3333
2181.9167
40.9583

BRIDGE ANALYSIS AND RATING SYSTEM
INPUT DATA FORM CARD TYPE 12

SECTION PROPERTIES (STEEL OR TIMBER) - GIRDERS, STRINGERS, FLOOR BEAMS

CARD TYPE (1-2)	STRUCTURE GROUP ID (3-5)	STRUCTURE NO. (6-8)	MEMBER ID GI SI BI NO. (9-11)	(12-13)	NON-DETAILED DESCRIPTION SECTION NO. (14-15)	A in.² (16-21)	I in.⁴ (22-28)	S in.³ (29-35)	(36-37)	COMPACT CODE x b (38)	DETAILED DESCRIPTION SECTION NO. (39-40)	SAME EXCEPT ADDR (41-42)	h in. (43-49)	I (50-51)	A_1 or X_1 in.² or in. (52-57)	PEDH b	I_{x_1} or Y_1 in.⁴ or in. (58-63)	d_y in. (64-69)	d_x in. (70-74)
1,2	7700	746	01					Add		X	01		94.625	01	18.50	P	0.875	94.187	
1,2											01			02	0.625		93.00	47.250	
1,2											01			03	20.00		0.750	0.3750	
1,2											02		95.250	01	18.50	P	0.875	94.812	
1,2											02			02	0.625		93.00	47.875	
1,2											02			03	20.00		1.375	0.6875	
1,2											03		96.687	01	20.50	P	1.437	95.969	
1,2											03			02	0.625		93.00	48.750	
1,2	7700	746	01								03			03	22.00		2.250	1.125	
1,2																			
1,2																			
1,2																			
1,2																			
1,2																			
1,2																			
1,2																			
1,2																			
1,2																			
1,2																			
1,2																			

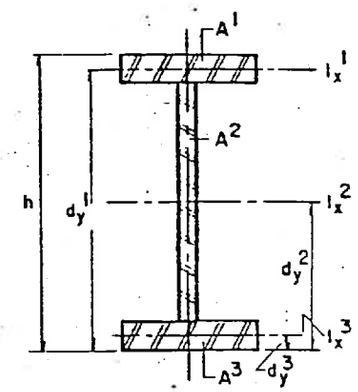

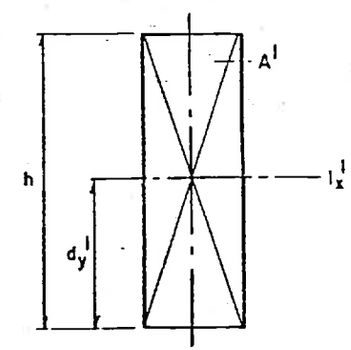

DETAILED DESCRIPTION

Ave $\frac{20.5+18.5}{2} = 19.5'' = 1.625' + 0.5' = 2.125'$ STIFFENER
3"+3" haunch

G01 STAY IN PLACE FORM.

$= 20(12-2.125) = 197.50$ HAUNCH
STIFFENER $= 11.55$
$209.05 + 18.75 = 227.80$

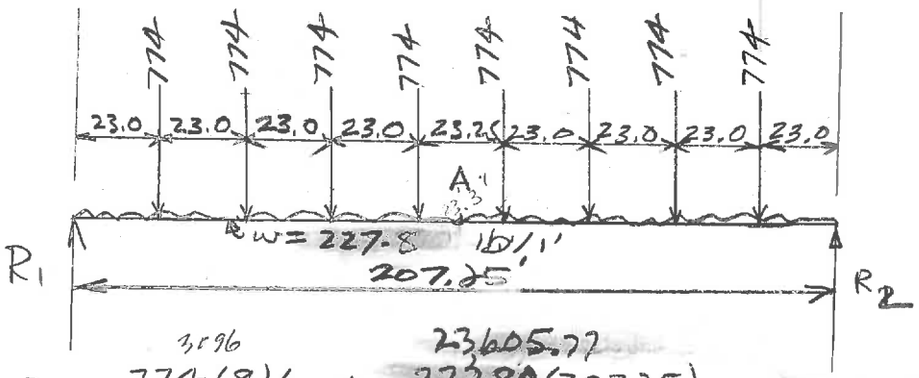

$R_1 = \overset{3{,}096}{774(8)/2} + \frac{\overset{23{,}605.77}{227.80(207.25)}}{2} = 26701.77$ lb

$26701.77 - 4(774) - 227.8x = 0$
$x = 103.625'$

$M_A = 26701.77(103.625) - 774(11.62 + 34.625 + 57.625 + 80.625) - 227.80\left(\frac{103.625}{2}\right)$

$= 2{,}766{,}970.92 - 142{,}799.13 - 1{,}223{,}074.22$

$= 1{,}401{,}097.57$ ft lb

$w = \frac{8(1{,}401{,}097.57)}{(207.25)^2} = 260.96$ lb/1'

$y'' = \frac{260.96(144)}{8(150)} = 31.31''$

$- \frac{1''\times 9''\times 93}{1728}(490)(8) =$ $= 1898.75$

INT. STIFFENER $4(5/8\times 7\tfrac{1}{2}\times 93)\frac{490}{144\times 12}$ $= 494.47$

2393.22

wt/1' $= \frac{2393.22}{207.25} = 11.55$ lb/1'

Top Flange $\frac{20.5+18.5}{2} = 19.5''$

THICKNESS OF FLANGE $1.44'' + 0.875'' = 1.57''$

HAUNCH $= \frac{6''\times 3''}{144}(150) = 18.75$

15

11"	11"
8	8
3	3
0.875	1.43
2.125	1.57

8 #5 = 8(0.31) = 2.48
7 #5 = 7(0.31) = 2.17
4.65

Sh B 41

BRIDGE ANALYSIS AND RATING SYSTEM
INPUT DATA FORM CARD TYPE 14

SECTION PROPERTIES (COMPOSITE REINFORCED CONCRETE SLAB WITH STEEL OR PRESTRESSED CONCRETE) — GIRDERS, STRINGERS

CARD TYPE	STRUCTURE GROUP ID	STRUCTURE NO.	MEMBER ID GSB NO.	SYMMETRICAL x b	SPAN NO.	RANGE NO.	RANGE LENGTH F I Feet In 1/16	COMPOSITE CODE	VALUE OF "n"	SECTION NO.	"SAME EXCEPT" A R	CONCRETE SLAB WIDTH in.	THICK in.	FILLET WIDTH in.	FILLET THICK in.	EFFECT. WIDTH in.	EFFECT. THICK in.	DIST. TO TOP OF BEAM SEC in.	NEGATIVE MOMENT REINF. $(A_s)_c$ in.^{2}	$(d_s)_c$ in.	F_y psi	
1,4	7,7,0	0,7,4	6,0,1		0,1	0,1	X 2,4,9,5,8,3	C		0,1		1,7,5.3	0,8.0	1,8.5	2.12	9,6.00	1,8.0	6.120	4.650	4.00	60	144+31.3 = 175.3
1,4						0,2	X 1,6,0,0,0,0	C		0,1		1,7,5.3	0,8.0	1,8.5	2.12	9,6.00	0,8.0	6.120	4.650	4.00	60	
1,4						0,3	X 1,2,5,3,3,3,4	C		0,2		1,7,5.3	0,8.0	2,0.5	1.57	9,6.00	0,8.0	5.570	4.650	4.00	60	
1,4						0,4	X 1,6,0,0	C		0,1												
1,4	7,7,0	0,7,4	6,0,1			0,5	X 2,4,9,5,8,3	C		0,1												
1,4																						
1,4																						
1,4																						
1,4																						
1,4																						
1,4																						
1,4																						
1,4																						
1,4																						
1,4																						
1,4																						
1,4																						
1,4																						
1,4																						
1,4																						

BRIDGE ANALYSIS AND RATING SYSTEM
INPUT DATA FORM — CONTROL CARDS

A

DATA UPDATING AND ANALYSIS INITIATION	
CARD TYPE AA DD 99	SEE LEGEND OF CARD TYPES FOR COLUMN HEADERS

1	2	3	4	5	6	7	8	9	10	11	12	13	14	15	16	17	18	19	20	21

MAITLAND BOULEVARD OVER LAKE BOSSE
77002-3503 SR 414 AMY SCALES
PROJ. ENG. FOR CONSTRUCTION

A770074.DAT
IN : H DRIVE

LEGEND

CARD TYPE AA

CARD TYPE	BLANK FIELD	NEW OR UPDATE	DELETE	ADDITION	SELECT	PERM FILE	LIST
	b b b b b b		x b	x b	x b	OLD NEW b	B T P b
1 2	3 4 5 6 7 8	9 10 11 12 13 14	15	16	17	18 19 20	21
A A		NEW			X		

CARD TYPE DD

PRESTRESSED

CARD TYPE	STRUCTURE GROUP ID	STRUCTURE NO.	SEQUENCE NUMBER	DELETE	BLANK FIELD
	→	→		x b	b b b b b b
1 2	3 4 5	6 7 8	9 10 11 12 13 14	15	16 17 18 19 20 21
D D					

CARD TYPE 99

PRESTRESSED

CARD TYPE	STRUCTURE GROUP ID	STRUCTURE NO.	STRUCTURE GROUP ID	STRUCTURE NO.	BLANK FIELD
	→	→	→	→	b b b b b b b
1 2	3 4 5	6 7 8	9 10 11	12 13 14	15 16 17 18 19 20 21
9 9	7 7 0	0 7 4			

BRIDGE ANALYSIS AND RATING SYSTEM
INPUT DATA FORM CARD TYPE 01

BATCH SPECIFICATIONS

CARD TYPE		DATE (D M Y)	RATING ANALYST IDENTIFICATION	RATING TYPE EXCEPTIONS (I O P)	INV. LOAD NAME	OPERATING LOAD NAME	OPERATING ALLOWABLE STRESS RATIO x.xxx	POSTING VEH. 1 LOAD NAME	POSTING VEH. 2 LOAD NAME	POSTING VEH. 3 LOAD NAME	POSTING ALLOWABLE STRESS RATIO x.xxx	SPEC. ALLOWABLE STRESS RATIO x.xxx	BATCH PROCESS CONTROL *XXX*		POST RATING	TIMINGS	TABLES
01		16 06 98	VVS	A A									*LFS		POST		

1 2 3 4 5 6 7 8 9 10 11 12 13 14 15 16 17 18 19 20 21 22 23 24 25 26 27 28 29 30 31 32 33 34 35 36 37 38 39 40 41 42 43 44 45 46 47 48 49 50 51 52 53 54 55 56 57 58 59 60 61 62 63 64 65 66 67 68 69 70 71 72 73 74 75 76 77 78 79 80

BRIDGE ANALYSIS AND RATING SYSTEM
INPUT DATA FORM CARD TYPES 02, 05 AND 06

STRUCTURE HEADER AND DESCRIPTION

CARD TYPE (1-2)	STRUCTURE GROUP ID (3-5)	STRUCTURE NO. (6-8)	RATING ANALYST IDENTIFICATION (9-24)	ENGR. ATTN. (25)	OVERRULE BATCH RAT. EXCEPT'S I O P (26-28)	OVERRULE FILE REQUESTS & OUTPUT DATA EXCEPTIONS (29-40)	STRUCTURE TYPE (41-46)	YEAR OF CONSTRUCTION (47-48)	STRUCTURE LENGTH Ft. (49-50)	STRUCTURE LENGTH Feet (51-54)	STRUCTURE LENGTH In (55-56)	STRUCTURE LENGTH 1/16 (57-58)	ROADWAY WIDTH Ft. (59-60)	ROADWAY WIDTH Feet (61-64)	ROADWAY WIDTH In (65-66)	ROADWAY WIDTH 11/16 (67-68)	NUMBER OF SPANS (69-70)	x NEGATE SPEC b (71)	LIVE LOAD TRUCK DESIGNATION INV. (72-75)	LIVE LOAD TRUCK DESIGNATION OPER. (76-79)	(80)
02	770	074					CPS	98	X	700	0	0		110	0	0	06				

STRUCTURE LOCATION AND PERMANENT IDENTIFICATION FACTORS

CARD TYPE (1-2)	STRUCTURE GROUP ID (3-5)	STRUCTURE NO. (6-8)	BRIDGE NUMBER (9-16)	DISTRICT (17)	COUNTY (18-20)	CONSTRUCTION ROUTE (21-28)	CONSTRUCTION SECTION (29-36)	CONSTRUCTION STATION (37-44)	MICROFILM REEL NUMBER DESIGN PLANS (45-51)	MICROFILM REEL NUMBER COMPUTATIONS (52-58)	MICROFILM REEL NUMBER CORRESPONDENCE (59-65)	KEY ROUTE ID (66-73)	MARKED ROUTE (74-80)
05	770	074		51	17	52414	77002	3750 0	DRMP				

COMMENTS

CARD TYPE (1-2)	STRUCTURE GROUP ID (3-5)	STRUCTURE NO. (6-8)	SEQ (9)	ANALYST REMARKS TO BE DUPLICATED IN FORM AND CONTENT ON SUMMARY OF RATING CALCULATIONS (10-80)
06	770	074	1	MAITLAND BLVD OVER LAKE BOSSE
06	770	074	2	601=814 SPAN 2 BULB-T 72 36-1/2" DIA. 270 KSI LOW LAX 30.98 KIP/STRAND
06	770	074	3	602=847 SPAN 5 BULB-T 72 46-1/2" DIA. 270 KSI LOW LAX 30.98 KIP/STRAND
06	770	074	4	DESIGN LOAD HS20
06			5	
06			6	

SPAN 2) PRESTRESSED
SPAN 5

BRIDGE ANALYSIS AND RATING SYSTEM
INPUT DATA FORM CARD TYPE 07

SPECIFICATIONS GENERALLY APPLICABLE TO MEMBERS OF A STRUCTURE

CARD TYPE (1-2)	STRUCTURE GROUP ID (3-5)	STRUCTURE NO. (6-8)	MATERIAL STRENGTH: STRUCT. STEEL Fy lbs / sq. in. (9-13)	REINFORCED CONCRETE Fy lbs / sq. in. (14-18)	REINFORCED CONCRETE f'c lbs / sq. in. (19-23)	COMPOSITE STEEL AND CONCRETE Fy lbs / sq. in. (24-28)	COMPOSITE STEEL AND CONCRETE f'c lbs / sq. in. (29-33)	PRESTRESSED CONCRETE LOSS kips / sq. in. (34-38)	PRESTRESSED CONCRETE E_g/E_s * (39-43)	PRESTRESSED CONCRETE f's kips / sq. in. (44-48)	PRESTRESSED CONCRETE f"c lbs / sq. in. (49-53)	MAXIMUM IMPACT FACTOR XX% INV (54-57)	MAXIMUM IMPACT FACTOR XX% OP (58-61)	MAXIMUM IMPACT FACTOR XX% POST (62-65)	MAXIMUM IMPACT FACTOR XX% SPEC (66-69)	MINIMUM IMPACT FACTOR XX% INV (70-73)	MINIMUM IMPACT FACTOR XX% OP (74-77)	MINIMUM IMPACT FACTOR XX% POST (78-79)	MINIMUM IMPACT FACTOR XX% SPEC	MATERIAL STRENGTH TIMBER	MATERIAL STRENGTH TIMBER f_b lbs / sq. in.
			x x x . x	x x . x x	i	i	i	x x x . x	x x . x x	i	i	i	i	i	i	i	i	i	i	i	i
07	770	074		6500	04500			45.00	1.202	270	06500										
07																					
07																					
07																					
07																					
07																					
07																					
07																					
07																					
07																					
07																					
07																					
07																					
07																					
07																					
07																					
07																					
07																					
07																					

* E_{girder}

601 L = 91.8021 − 2(0.5417) = 90.7187'
602 L = 100.9896 − 2(0.5417) = 99.9062'

BRIDGE ANALYSIS AND RATING SYSTEM
INPUT DATA FORM CARD TYPE 08

MEMBER DESCRIPTION SPECIFICATIONS – GIRDER, STRINGER, FLOOR BEAM

CARD TYPE	STRUCTURE GROUP ID	STRUCTURE NO.	MEMBER ID GIRD STRG NO.	CONTINUE	TOTAL NO. OF SPANS	CANTIL. FLR. BM	CANTIL. ANALYSIS	SYMMETRICAL	SPAN LENGTHS SPAN 1 4 7 10 13 16 Feet	In	1/16	SPAN 2 5 8 11 14 17 Feet	In	1/16	SPAN 3 6 9 12 15 18 Feet	In	1/16	CRC SS RC CSC PSC CPS TMB	ALLOWABLE STRESS F_y psi	f'_z ksi	f_{b_3} lbs/sq. in.	f'_c	f''_c	LIVE LOAD DISTRIB. FACTOR "E" or "S" in Feet	END FLOOR BEAM	THROUGH	MAXIMUM IMPACT FACTOR XXX INV	OP	POST	SPEC	STIFFENER CODE	END FIXITY L	R
08	7.70	0.74	6 0 1		01				X	90	7	18	7						CPS					2.182									
08	7.70	0.74	6 0 2		01				X	99	9	06	2						CPS					2.182									
08																																	
08																																	
08																																	
08																																	
08																																	
08																																	
08																																	
08																																	
08																																	
08																																	
08																																	
08																																	
08																																	
08																																	
08																																	
08																																	
08																																	
08																																	
08																																	
08																																	
08																																	

12/5.5 = 2.182

BRIDGE ANALYSIS AND RATING SYSTEM
INPUT DATA FORM CARD TYPE 09

RATING POSITION SPECIFICATIONS

CARD TYPE	STRUCTURE GROUP ID	STRUCTURE NO.	MEMBER ID GSB	MEMBER ID NO.	RATING POSITION LOCATION SPPP	DISTANCE FROM LEFT SUPPORT F	Feet	In	1/16	MVB	MOM. IN FT-KIPS SHEAR IN KIPS SECTION CAPACITY	CAPACITY REDUCT. DUE TO DL	RATING POSITION LOCATION SPPP	DISTANCE FROM LEFT SUPPORT F	Feet	In	1/16	MVB	MOM. IN FT-KIPS SHEAR IN KIPS SECTION CAPACITY	CAPACITY REDUCT. DUE TO DL
1 2 3 4 5	6 7 8 9 10	11 12 13 14	15 16 17 18	19 20 21	22 23 24	25	26 27 28 29 30	31 32 33 34 35	36	37 38 39 40	41 42 43 44 45	46 47 48 49 50	51 52 53 54 55	56 57 58 59 60						
0.9	7700	7460	1		X		22	6	9	7	B									
0.9	7700	7460	2		X		24	9	7	65	B									
0.9																				
0.9																				
0.9																				
0.9																				
0.9																				
0.9																				
0.9																				
0.9																				
0.9																				
0.9																				
0.9																				
0.9																				
0.9																				
0.9																				
0.9																				
0.9																				
0.9																				
0.9																				

1 SIDE WT / half of Bridge

ALUMINUM RAILING 2 lb/1' / RAIL 3 RAILS = 6 lb/1' = 6x8" (INTERVAL) = 48 lb

RAIL POST 5H x 6.49 wt = 6.49 x 2.5 = 16.22 "

64.22 "

wt/1' = 64.22 / 8 = 8.02 lb/1'

Sh A-9

PARAPET = 24x8 / 144 x 150 = 200 lb/1'

BARRIER = 417 "/1'

RAISED MEDIAN = 9.5'x0.5'x150 = 712.5 "

1337.52 "

wt/1' of Beam = 1337.52 / 5.5 = 243.18 lb/1' wt IN BR # 770075

Φ30" PIPE 466 lb/1'/11 = 42.36 "

285.54 ≈ lb/1'

STAY IN PLACE Form To be included IN Card 14.

BRIDGE ANALYSIS AND RATING SYSTEM
INPUT DATA FORM CARD TYPE 10

SUPERIMPOSED DEAD LOADS - GIRDERS, STRINGERS, FLOOR BEAMS

CARD TYPE (1-2)	STRUCTURE GROUP ID (3-5)	STRUCTURE NO. (6-8)	MEMBER ID G1 S1 B1 NO. (9-11)	SYMMETRICAL x b (12)	SPAN NO. (13-14)	(15-21)	DISTANCE FROM LEFT SUPPORT IN SPAN F I Feet (22-26)	In 1/16 (27-31)	(32)	LOAD TYPE P W V (33)	DISTRIBUTED OR CONCENTRATED LOAD "P" in KIPS "W" in LBS/FT P or W_L x x x x v (34-38)	W_R x x x x v (39-43)	LENGTH (DISTRIBUTED) F I Feet (44-49)	In 1/16 (50-53)
10	770	074	G01		01					W	285.5		X	901718 7
10	770	074	G02		01					W	285.5		X	999062
10														
10														
10														
10														
10														
10														
10														
10														
10														
10														
10														
10														
10														
10														
10														
10														
10														
10														

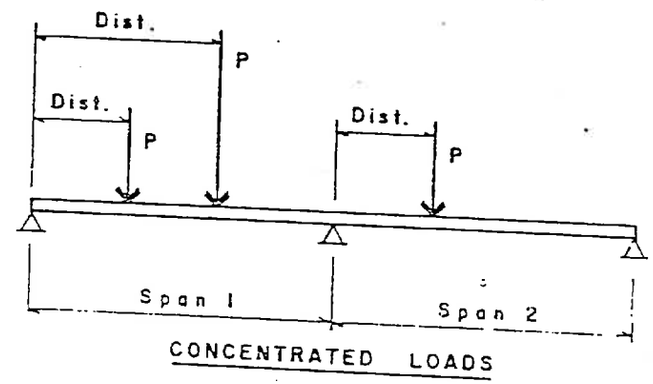

CONCENTRATED LOADS

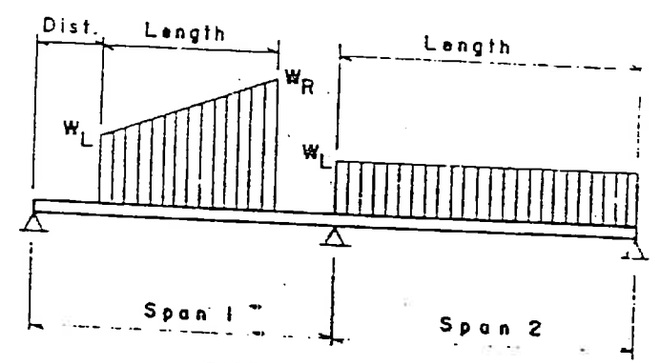

DISTRIBUTED LOADS

BRIDGE ANALYSIS AND RATING SYSTEM
INPUT DATA FORM CARD TYPE 11

SECTION RANGE SPECIFICATIONS

CARD TYPE	STRUCTURE GROUP ID	STRUCTURE NO.	MEMBER ID (GI SI BI)	SYMMETRICAL (X b)	SPAN NO.	SECTION RANGE: RANGE NO.	RANGE LENGTH F	I	Feet	In	1/16	SEC NO. Lt.	SEC NO. Rt.	SEC VAR (SPTb, TBb)	CODE (1 2 b)	HINGE LOCATION: FIRST HINGE DISTANCE FROM LEFT F	I	Feet	In	1/16	SECOND HINGE DISTANCE FROM LEFT F	I	Feet	In	1/16	HYBRID GIRDER: YIELD STRENGTH: BASE SECTION (Ab)	Fv (psi)	EXCEPTION (TWBb)	Fv (psi)
1 1	7700	74	601		01	01	X		90	7	187	01																		
1 1	7700	74	602		01	01	X		99	9	062	01																		

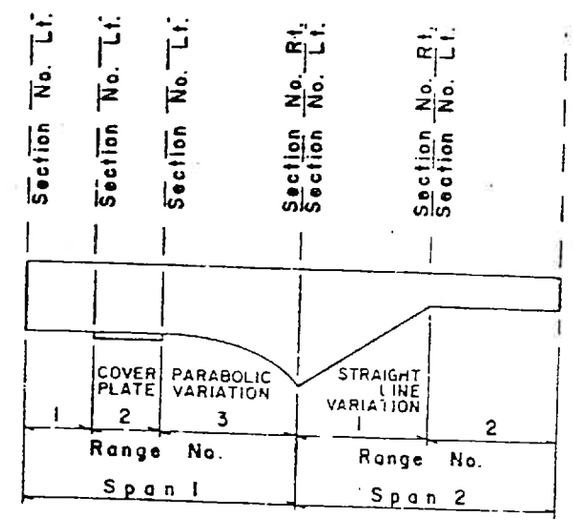

SECTION RANGE

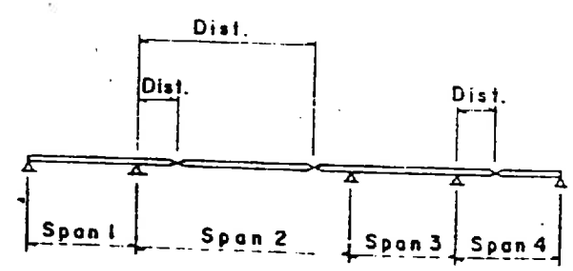

INTERMEDIATE HINGES

STAY IN PLACE FORM

FLANGE WIDTH

$20(12-4) = 160$

Gol $L = 90.7187'$

$$Y'' = \frac{160 \times 144}{8 \times 150} = 19.2''$$

BRIDGE ANALYSIS AND RATING SYSTEM
INPUT DATA FORM CARD TYPE 14

SECTION PROPERTIES (COMPOSITE REINFORCED CONCRETE SLAB WITH STEEL OR PRESTRESSED CONCRETE) — GIRDERS, STRINGERS

CARD TYPE	STRUCTURE GROUP ID	STRUCTURE NO.	MEMBER ID (G S B) NO.	SYMMETRICAL x b	SPAN NO.	RANGE NO.	RANGE LENGTH F I Feet In 1/16	COMPOSITE CODE	COMPOSITE SECTION DESCRIPTION: VALUE OF "n"	SECTION NO.	"SAME EXCEPT"	A R	CONCRETE SLAB: WIDTH in.	THICK in.	FILLET WIDTH in.	FILLET THICK in.	EFFECT. WIDTH in.	EFFECT. THICK in.	DIST. TO TOP OF BEAM SEC in.	NEGATIVE MOMENT REINF.: $(A_s)_c$ in.^{2}	$(d_s)_c$ in.	F_y psi
1 2	3 4 5	6 7 8	9 10 11	12	13 14	15 16	17 18 19 20 21 22 23 24 25 26	27	28 29	30 31	32 33	34	35 36 37 38 39	40 41 42 43	44 45 46 47	48 49 50 51	52 53 54 55 56	57 58 59 60	61 62 63 64 65	66 67 68 69 70	71 72 73 74	75 76 77 78 79
1 4	7 7 0	0 7 4	G 0 1		0 1	0 1	X 9 0 7 1 8 7	C		0 1			1 6 3 . 2	0 8 . 0	4 8 . 0	3 . 0 0	9 6 . 0 0	0 8 . 0	7 . 0 0			
1 4	7 7 0	0 7 4	G 0 2		0 1	0 1	X 9 9 9 0 6 2	C		0 1			1 6 3 . 2	0 8 . 0	4 8 . 0	3 . 0 0	9 6 . 0 0	0 8 . 0	7 . 0 0			
1 4																						
1 4																						
1 4																						
1 4																						
1 4																						
1 4																						
1 4																						
1 4																						
1 4																						
1 4																						
1 4																						
1 4																						
1 4																						
1 4																						
1 4																						
1 4																						
1 4																						

144+19.2 = 163.2

BRIDGE ANALYSIS AND RATING SYSTEM
INPUT DATA FORM CARD TYPE 15

SECTION PROPERTIES (PRESTRESSED CONCRETE) - GIRDERS, STRINGERS

CARD TYPE	STRUCTURE GROUP ID	STRUCTURE NO.	MEMBER ID GSB NO.	SECTION NO.	SAME EXCEPT ADIRS	VOID DESCRIPTION: DIAM. OR DEPTH in. H_v	VOID DESCRIPTION: WIDTH in. W_v	VOID DESCRIPTION: CEN. TO BOT. OF BEAM DIST. in. d_v	CONCRETE SHAPE DESCRIPTION: BEAM DEPTH in. H	TOP FLGE. WID. in. W_T	TOP FLGE. THK. in. t_T	TOP FILLET THICK in. g_T	WEB THK. in. W	BOT. FILLET THICK in. g_B	BOT. FLGE. THK. in. t_B	BOT. FLGE. WID. in. W_B	PRESTRESSING STRANDS: i	BTAK INNNbb	A_s^i in.^{2}	E b	d^i in.
1,5	7,7,0	0,7,4	0,0,1	0,1					7,2,0,0	4,8,0	0,2,0	0,4,0,0	0,6,5	0,5,5,0	0,7,5	3,0,0	0,1	L	1,3,0,8		0,3,0,0
1,5																	0,2	L	1,3,0,8		0,5,0,0
1,5																	0,3	L	9,0,8		0,7,0,0
1,5	7,7,0	0,7,4	0,0,1	0,1					7,2,0,0	4,8,0	0,2,0	0,4,0,0	0,6,5	0,5,5,0	0,7,5	3,0,0	0,4	L	1,0,8		0,9,0,0
1,5																					
1,5	7,7,0	0,7,4	0,0,2	0,1					7,2,0,0	4,8,0	0,2,0	0,4,0,0	0,6,5	0,5,5,0	0,7,5	3,0,0	0,1	L	1,3,0,8		0,3,0,0
1,5																	0,2	L	1,3,0,8		0,5,0,0
1,5																	0,3	L	1,1,0,8		0,7,0,0
1,5																	0,4	L	5,0,8		0,9,0,0
1,5																	0,5	L	1,0,8		1,1,0,0
1,5																	0,6	L	1,0,8		1,3,0,0
1,5	7,7,0	0,7,4	0,0,2	0,1					7,2,0,0	4,8,0	0,2,0	0,4,0,0	0,6,5	0,5,5,0	0,7,5	3,0,0	0,7	L	1,0,8		1,5,0,0
1,5																	0,8	L	1,0,8		1,7,0,0
1,5																					
1,5																					
1,5																					
1,5																					
1,5																					
1,5																					

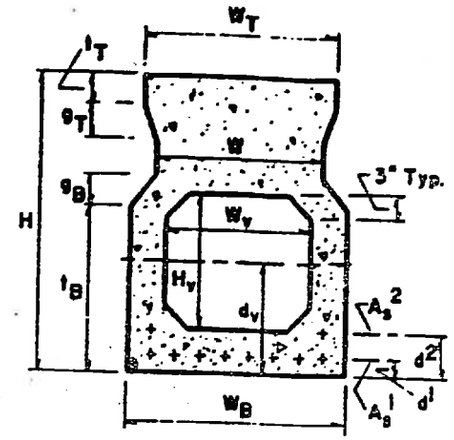

PSC BOX GIRDER WITH VOID OR DECK SLAB BEAM WITH VOID

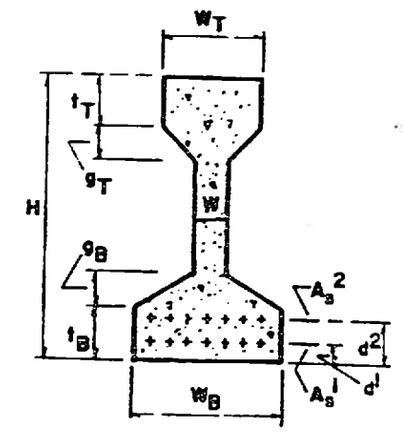

PSC I-BEAM

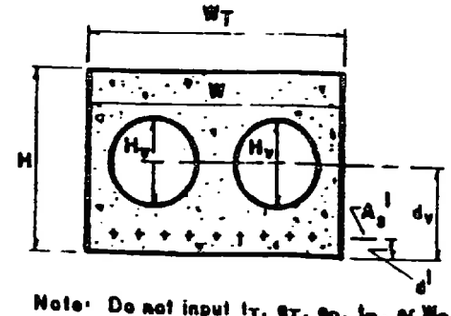

Note: Do not input t_T, g_T, g_B, t_B, or W_B

PSC RECTANGULAR BOX BEAM WITH CIRCULAR VOID

Col L = 90.7187'
88.9966
2 | 1.7227
0.86135

8.5" = 0.7083
0.5417'
0.1666

BRIDGE ANALYSIS AND RATING SYSTEM
INPUT DATA FORM CARD TYPE 17

SPECIFICATIONS FOR SHEAR REINFORCENT - RC, PSC, CPS, CRC MEMBERS

CARD TYPE	STRUCTURE GROUP ID	STRUCTURE NO.	MEMBER ID GIRDER	MEMBER ID NO.	SYMMETRICAL	SPAN NO.	SHEAR REINF.	SECTION RANGE RANGE NO.	RANGE LENGTH F	RANGE LENGTH Feet	RANGE LENGTH In	RANGE LENGTH 1/16		SHEAR REINFORCEMENT GROUP	i	A_s^i in.² B	b	N	N	D	D	ANGLE OF REINFORCEMENT α	SPACING OF EQUALLY SPACED POINTS WITHIN RANGE NO. OF SPACING	SPACING (LENGTH) F	Feet	In	1/16
1	7	7700	74	G01		01	S	01	X		01	66			01	B		204					91	X		01	66
1	7							2			07	50			01	B		204					03	X		02	50
1	7							3			42	50						104					17	X		02	50
1	7							4			93	24						104					28	X		03	33
1	7							5			5	50						104					10	X		05	50
1	7							6			24	99											30	X		08	33
1	7							7			17	26											02			08	13
1	7							8			24	99											30			08	33
1	7							9			5	50											10			05	50
1	7							10			93	24											28			03	33
1	7							11			42	50						104					17			02	50
1	7							12			07	50						204					03			02	50
1	7	7700	74	G01		01	S	13	X		01	66			01	B		204					91	X		01	66
1	7																										
1	7																										
1	7																										
1	7																										
1	7																										
1	7																										
1	7																										

0.86135 ✓
0.859375 × 2

BRIDGE ANALYSIS AND RATING SYSTEM
INPUT DATA FORM CARD TYPE 17

60' L = 99.9062
97.9979
1.9084
0.9542

8½" = 0.7083
0.5417
0.1666

95.7486
99.9062
97.9984
1.9978
2

48.8874

Use 10 INSTEAD of 8 To Balance The lengths of Beam

SPECIFICATIONS FOR SHEAR REINFORCENT - RC, PSC, CPS, CRC MEMBERS

CARD TYPE	STRUCTURE GROUP ID	STRUCTURE NO.	MEMBER ID (GI SI BI NO.)	SYMMETRICAL	SPAN NO.	SHEAR REINF.	SECTION RANGE RANGE NO.	RANGE LENGTH Fil	Feet	In	1/16		SHEAR REINFORCEMENT GROUP	i	A_s^i in.² (B b N N D D)	ANGLE OF REINFORCEMENT	SPACING OF EQUALLY SPACED POINTS WITHIN RANGE NO. OF SPACING	SPACING (LENGTH) Fil	Feet	In	1/16	
17	770	074	602	01	S	01	X		01	16	66			01	B 204		01	X		01	16	66
17						02			07	50	00			01	B 204		03	X		02	50	00
17						03			82	50	00				104		33	X		02	50	00
17						04			69	99	93						21	X		03	33	33
17						05			24	50	00						49	X		05	50	00
17						06			83	33	30						10	X		08	33	33
17						07			19	08	84						02	X		09	54	02
17						08			83	33	30						10			08	33	33
17						09			24	50	00						49			05	50	00
17						10			69	99	93						21			03	33	33
17						11			82	50	00				104		33			02	50	00
17						12			07	50	00			01	B 204		03			02	50	00
17	770	074	602	01	S	13	X		01	16	66			01	B 204		01	X		01	16	66
17																						
17																						
17																						
17																						
17																						
17																						
17																						

17 + 16 = 33
16

0.9542
0.9531

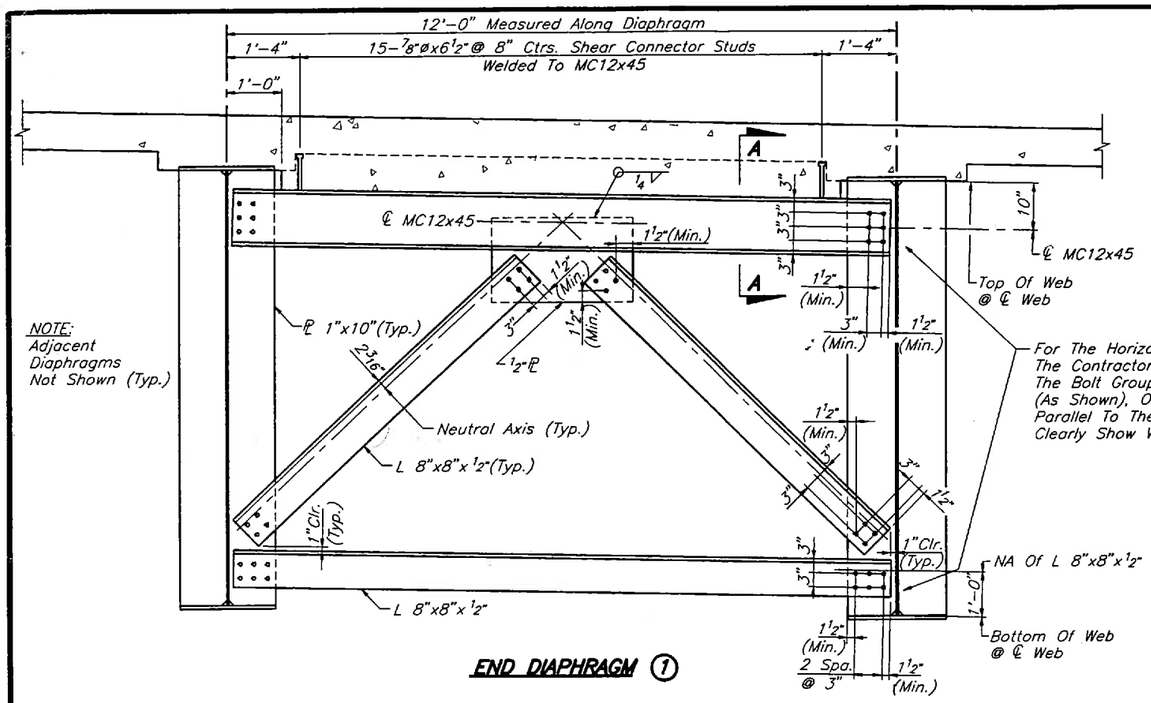

For The Horizontal Diaphragm Members, The Contractor May Either Fabricate The Bolt Groups Normal To The Members (As Shown), Or Fabricate The Bolt Groups Parallel To The Web. The Shop Drawings Shall Clearly Show Which Orientation Will Be Used.

END DIAPHRAGM ①

ESTIMATED QUANTITIES		
ITEM	UNIT	QUANTITY
Structural Steel (Weathering)	lb	1132741

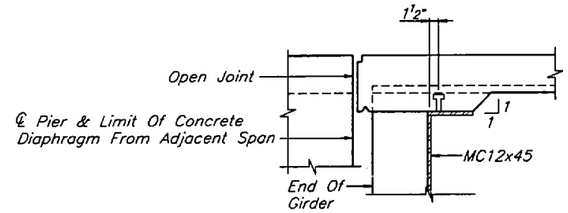

SECTION A–A

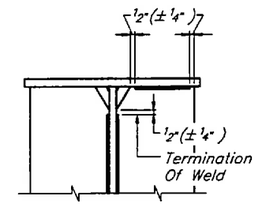

STIFFENER WELD TERMINATION DETAIL

If Stiffener Plate Extends Beyond Flange Edge, The Weld Shall Be Terminated 1/2"(± 1/4") From Edge.

L 6"x6"x3/8" x 14.9 wt = 14.9(7.5+6.16+6.16+7.5) = 407.06 lb

[8x12x0.5 / 12x144] + [18x18x0.5 / 12x144] 490x2 = 119.09 "

2 STIFENERS 5/8"x7 1/2"x93"x490x2 / 1728 = 247.23 "

773.38 "

DIAPHRAGM AND CROSS FR

1. Bolt Holes In Diaphragm And C Shall Be Oversized Holes (1/16" L Diameter), Bolt Holes In The C Shall Be Standard Holes.
2. All Bolts Shall Be 7/8" ø H.S. Bo Conforming To ASTM A325 (Type Distance 1 1/2", Minimum Spacing 3
3. Diapragms And Cross Bracing L Space Under The Closure Pour C Shall Not Be Installed Until The D Between Adjacent Decks Is Equa Be Installed And Secured Prior To Closure Pour Cap.

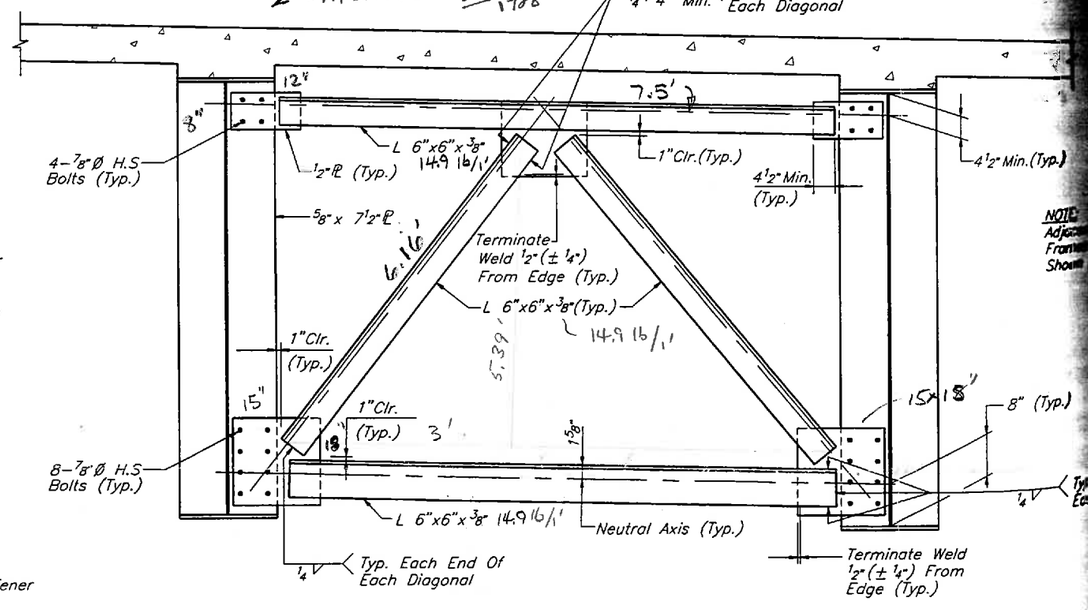

INTERMEDIATE CROSS FRAME

#770074

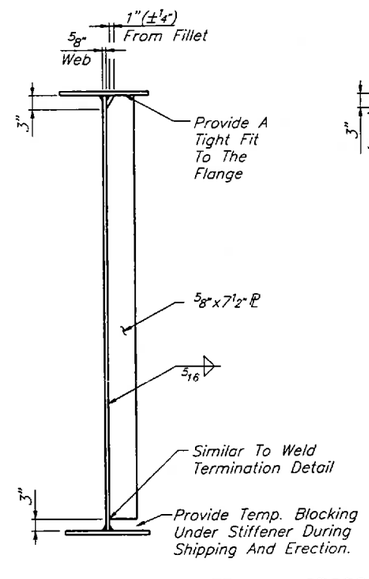

TRANSVERSE STIFFENER

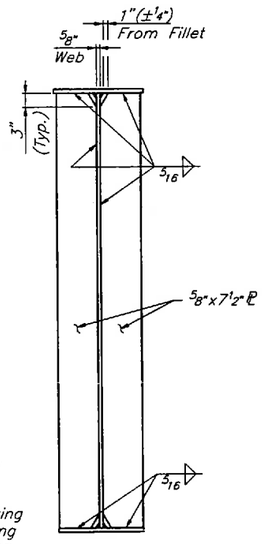

CROSS FRAME CONNECTION

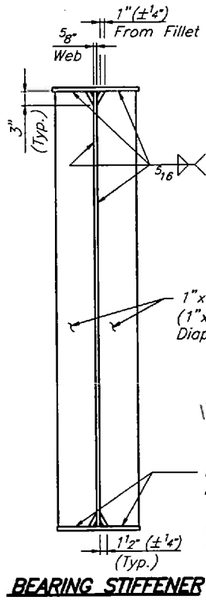

Note: Bearing Stiffeners Which Do Not Provide A Connection For The Diaphragm Do Not Need To Be Welded To The Top Flange, But Shall Be Fabricated To Form A Tight Fit With The Top Flange

93" / 12x28.75 SPACE = 0.2695

Use Either A Prequalified Full Penetration Groove Weld Or "Mill To Bear". Where The Bearing Stiffener Provides A Connection For The Diaphragm, Use A 5/16" Fillet Weld On Both Sides Of Each Stiffener.

9 / 44 SPACE = 0.2045

BEARING STIFFENER

REVISIONS					
Date	By	Description	Date	By	Description

	Names	Dates
Drawn by	JLA/JJS	3/96
Checked by	MN	3/96
Designed by	MN	3/96
Checked by	PM	3/96
Approved by	Peeter Mannik, P.E.	

ENGINEER OF RECORD: DYER, RIDDLE, MILLS AND PRECOURT, INC. 1505 EAST COLONIAL DRIVE ORLANDO, FLORIDA 32803

LOGO: DRMP DYER, RIDDLE, MILLS & PRECOURT, INC. ENGINEERS · SURVEYORS

SEAL: 3/4/98

FLORIDA DEPARTMENT OF TRANSPORTATION
STRUCTURES DESIGN OFFICE

ROAD NO.	COUNTY	PROJECT NO.
SR414	SEMINOLE	77002-3503

SHEET TITLE: GIRDER DETAILS

PROJECT NAME: MAITLAND BOULEVARD OVER LAKE BOSSE

JA/JS04/03/97 10:45AM M:\000BR\LKB\LKBGRDT.DWG

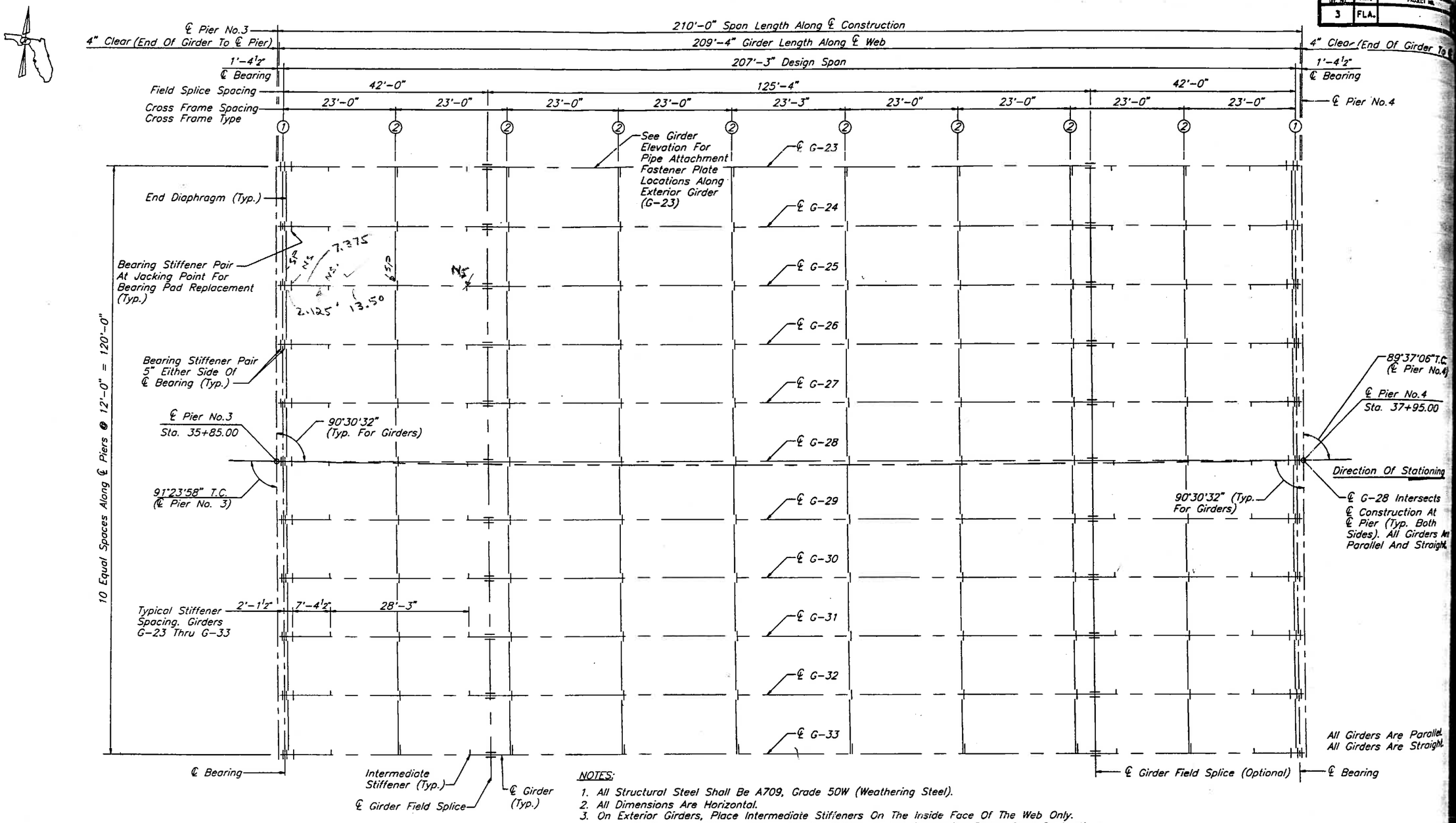

NOTES:

1. All Structural Steel Shall Be A709, Grade 50W (Weathering Steel).
2. All Dimensions Are Horizontal.
3. On Exterior Girders, Place Intermediate Stiffeners On The Inside Face Of The Web Only.
4. Ends Of Girders, Stiffener Plates, Bearing Stiffeners And Connection Plates Shall Be Vertical Upon Completion Of Construction.
5. All Cross Frames Shall Be Parallel To The ℄ Piers.
6. For Steel Girder Details, See Sheets B-44 Thru B-47.
7. For Additional Steel Girder Notes, See Sheet A-2.
8. For Field Splice Details, See Sheet B-46.
9. All Welding Design, Fabrication & Inspection Shall Be In Accordance With The Current AASHTO/AWS Bridge Welding Code.
10. Charpy V-Notch Impact Test Are Required For All Web Plates And Bottom Flange Plates Of The Girders (Including Field Splice Plates).

REVISIONS					
Date	By	Description	Date	By	Description

	Names	Dates
Drawn by	JLA/JJS	3/96
Checked by	MN	3/96
Designed by	MN	3/96
Checked by	PM	3/96
Approved by	Peeter Mannik, P.E.	

ENGINEER OF RECORD: DYER, RIDDLE, MILLS AND PRECOURT, INC. 1505 EAST COLONIAL DRIVE ORLANDO, FLORIDA 32803

LOGO: DRMP DYER, RIDDLE, MILLS & PRECOURT, INC. ENGINEERS · SURVEYORS

SEAL: 3/4/98

FLORIDA DEPARTMENT OF TRANSPORTATION
STRUCTURES DESIGN OFFICE

ROAD NO.	COUNTY	PROJECT NO.
SR414	SEMINOLE	77002-3503

SHEET TITLE: FRAMING PLAN - SPAN 3

PROJECT NAME: MAITLAND BOULEVARD OVER LAKE BOSSE

FED. ROAD DIV. NO.	STATE	PROJECT NO.
3	FLA.	

JA/JS02/07/97 4:28PM M:\000BR\LK8\LK8FRM.DWG

FED. ROAD DIV. NO.	STATE	PROJECT NO.	FISCAL YEAR	SHEET NO.
3	FLA.		98	B-44

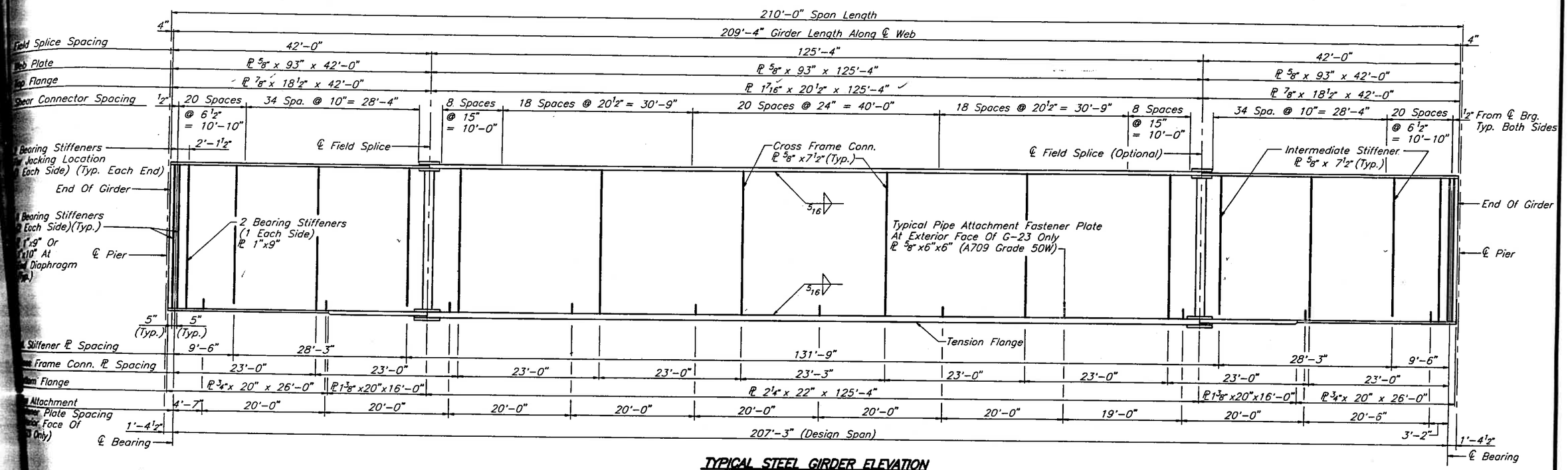

TYPICAL STEEL GIRDER ELEVATION

GIRDER NO. 23 THROUGH 33

Notes:
1. All Intermediate Stiffener Plates Are One Sided. All Cross Frame Connection Plates Are Two Sided Except At Exterior Beams. See The "FRAMING PLAN" For Locations.
2. See The Bearing Details Sheet For Details Of The Bearing Plates To Be Welded To The Bottom Flange.

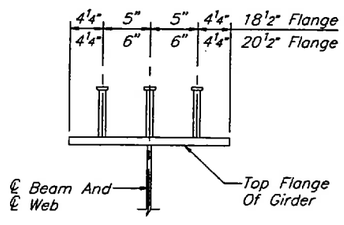

SECTION THRU GIRDER

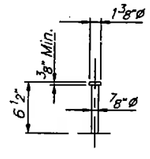

Typical Welded Stud (3 Per Row)

SHEAR CONNECTOR DETAILS

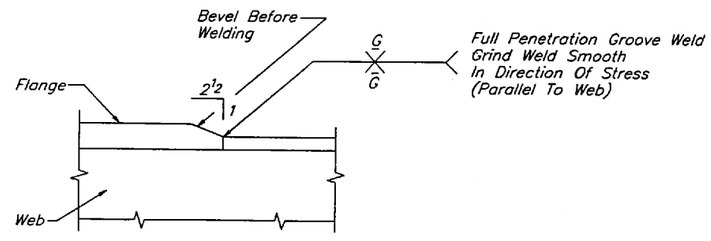

FLANGE THICKNESS TRANSITION

(Typ.– Except At Field Splice Locations)

REVISIONS

Description	Date	By	Description

	Names	Dates
Drawn by	JLA/JJS	3/96
Checked by	MN	3/96
Designed by	MN	3/96
Checked by	PM	3/96
Approved by	Peeter Mannik, P.E.	

ENGINEER OF RECORD:
DYER, RIDDLE, MILLS AND PRECOURT, INC.
1505 EAST COLONIAL DRIVE
ORLANDO, FLORIDA 32803

LOGO: DRMP DYER, RIDDLE, MILLS & PRECOURT, INC. ENGINEERS · SURVEYORS

SEAL: Peeter Mannik 3/4/98

FLORIDA DEPARTMENT OF TRANSPORTATION
STRUCTURES DESIGN OFFICE

ROAD NO.	COUNTY	PROJECT NO.
SR414	SEMINOLE	77002-3503

SHEET TITLE: GIRDER ELEVATION

PROJECT NAME: MAITLAND BOULEVARD OVER LAKE BOSSE

Drawing No.

Index No.

FLORIDA DEPARTMENT OF TRANSPORTATION
BRIDGE MANAGEMENT SYSTEM
Inspection/CIDR/Bridge Profile Report
Inspection

Structure ID: 770075

DISTRICT: D5 - Deland **INSPECTION DATE: 4/9/2019 NWXR**

BY:	FDOT District 5	STRUCTURE NAME:	SR-414 - Little Wekiva River
OWNER:	1 State Highway Agency	YEAR BUILT:	2000
MAINTAINED BY:	1 State Highway Agency	SECTION NO.:	77 002 000
STRUCTURE TYPE:	5 Prestressed Concrete - 02 Stringer/Girder	MP:	37.805
LOCATION:	SR-414 -Little Wekiva Ri	ROUTE:	00414
SERV. TYPE ON:	1 Highway	FACILITY CARRIED:	SR-414
SERV. TYPE UNDER:	5 Waterway	FEATURE INTERSECTED:	Little Wekiva River

☐ FUNCTIONALLY OBSOLETE ☐ STRUCTURALLY DEFICIENT

TYPE OF INSPECTION: Regular NBI

DATE FIELD INSPECTION WAS PERFORMED: ABOVE WATER: 4/9/2019 UNDERWATER: N/A

SUFFICIENCY RATING: 96.3
HEALTH INDEX: 99.82

This report contains information relating to the physical security of a structure and depictions of the structure. This information is confidential and exempt from public inspection pursuant to sections 119.071(3)(a) and 119.071(3)(b), Florida Statutes. Only the cover page of this report may be inspected and copied.

FLORIDA DEPARTMENT OF TRANSPORTATION
BRIDGE MANAGEMENT SYSTEM
Inspection/CIDR/Bridge Profile Report
Inspection

Structure ID: 770075

DISTRICT: D5 - Deland **INSPECTION DATE: 4/9/2019 NWXR**

BY:	FDOT District 5	STRUCTURE NAME:	SR-414 - Little Wekiva River
OWNER:	1 State Highway Agency	YEAR BUILT:	2000
MAINTAINED BY:	1 State Highway Agency	SECTION NO.:	77 002 000
STRUCTURE TYPE:	5 Prestressed Concrete - 02 Stringer/Girder	MP:	37.805
LOCATION:	SR-414 -Little Wekiva Ri	ROUTE:	00414
SERV. TYPE ON:	1 Highway	FACILITY CARRIED:	SR-414
SERV. TYPE UNDER:	5 Waterway	FEATURE INTERSECTED:	Little Wekiva River

- [ ] THIS BRIDGE CONTAINS FRACTURE CRITICAL COMPONENTS
- [ ] THIS BRIDGE IS SCOUR CRITICAL
- [ ] THIS REPORT IDENTIFIES DEFICIENCIES WHICH REQUIRE PROMPT CORRECTIVE ACTION
- [ ] FUNCTIONALLY OBSOLETE
- [ ] STRUCTURALLY DEFICIENT

TYPE OF INSPECTION: Regular NBI

DATE FIELD INSPECTION WAS PERFORMED: ABOVE WATER: 4/9/2019 UNDERWATER: N/A

OVERALL NBI RATINGS:

DECK:	7 Good	CHANNEL:	7 Minor Damage
SUPERSTRUCTURE:	7 Good	CULVERT:	N N/A (NBI)
SUBSTRUCTURE:	7 Good	SUFF. RATING:	96.3
PERF. RATING:	Good	HEALTH INDEX:	99.82

FIELD PERSONNEL / TITLE / NUMBER:	INITIALS
Kneale, Ronald - Bridge Inspector (CBI#00388) (lead)	Ronald Kneale Digitally signed by: Ronald Kneale DN: CN = Ronald Kneale email = ronald.kneale@dot.state.fl.us C = AD Date: 2019.05.13 14:59:17 -05'00'
Loveless, Walter - Bridge Inspector (CBI #00355)	

REVIEWING BRIDGE INSPECTION SUPERVISOR:

Jastremsky, Jonathan - Professional Engineer (P.E.#73900) Jonathan J Jastremsky Digitally signed by: Jonathan J Jastremsky DN: CN = Jonathan J Jastremsky C = US O = FLORIDA DEPARTMENT OF TRANSPORTATION OU = FLORIDA DEPARTMENT OF TRANSPORTATION Date: 2019.05.13 15:02:56 -04'00'

CONFIRMING REGISTERED PROFESSIONAL ENGINEER:

Kestory, Edmond - DSME (P.E.#60889) FDOT District 5
1650 North Kepler Road
Deland Operations
Deland FL 32724

SIGNATURE:

DATE:

THIS DOCUMENT HAS BEEN DIGITALLY SIGNED AND SEALED BY:

EDMOND JOSEPH KESTORY LICENSE No 60889 STATE OF FLORIDA PROFESSIONAL ENGINEER

ON THE DATE ADJACENT TO THE SEAL. PRINTED COPIES OF THIS DOCUMENT ARE NOT CONSIDERED SIGNED AND SEALED. THE SIGNATURE MUST BE VERIFIED ON ANY ELECTRONIC DOCUMENTS.

Digitally signed by: Edmond J Kestory Jr
DN: CN = Edmond J Kestory Jr C = US O = IdenTrust ACES Business Representative OU = FLORIDA DEPARTMENT OF TRANSPORTATION
Date: 2019.05.23 14:24:59 -04'00'

This report contains information relating to the physical security of a structure and depictions of the structure. This information is confidential and exempt from public inspection pursuant to sections 119.071(3)(a) and 119.071(3)(b), Florida Statutes. Only the cover page of this report may be inspected and copied.

FLORIDA DEPARTMENT OF TRANSPORTATION
BRIDGE MANAGEMENT SYSTEM
Inspection/CIDR/Bridge Profile Report
Inspection

Structure ID: 770075

DISTRICT: D5 - Deland **INSPECTION DATE: 4/9/2019 NWXR**

All Elements

DECKS : Decks/Slabs

Str Unit	Elem/Env	Description	Qty1	%1	Qty2	%2	Qty3	%3	Qty4	%4	T Qty
0	12 / 2	Re Concrete Deck	8560	100	0	.	0	.	0	.	8560 sq.ft

Element Inspection Notes:

12/2 CS-1 - NO CHANGES
Mountable Median - The concrete mountable median has insignificant cracking throughout.

Deck Top - There are insignificant cracking throughout the deck top.

Deck Underside - The deck underside has steel stay in-place forms. There are two abandoned utility lines on the underside of the deck overhang on both sides of the bridge. There is a 36in. water line attached to the underside of the south deck overhang.
There is a form board on the underside of the southeast deck overhang adjacent to the backwall.

DECKS : Joints

Str Unit	Elem/Env	Description	Qty1	%1	Qty2	%2	Qty3	%3	Qty4	%4	T Qty
0	301 / 2	Pourable Joint Seal	150	63.56	80	33.9	6	2.54	0	.	236 ft
0	2320 / 2	Seal Adhesion	0	.	80	100	0	.	0	.	80 ft
0	2360 / 2	Adjacent Deck or Header	0	.	0	.	6	100	0	.	6 ft

Element Inspection Notes:

301/2 NEW
2360 - CS-3- There is a patched area in lane 1 westbound. The patch is 5ft. x 15in. x 1in. (6ft.) See photo #1.

CS-2 - NO CHANGE
2320 - The joint sealant is being impacted by traffic at random locations. There are minor edge spalls and in-place spalls with minor adhesion failure at several locations throughout all expansion joints. The edge spalls are up to 5in. x 1in. x 1/2in. and in-place spalls are up to 5in. x 1in. (80ft.) See photo #2.

*Note - The width of both expansion joints were previously measured at a temperature of 80 degrees:
End Bent 1 - 1 3/4in.
End Bent 2 - 1 5/8in.

2320/2 Refer to Parent Element

2360/2 Refer to Parent Element

MISCELLANEOUS : Channel

Str Unit	Elem/Env	Description	Qty1	%1	Qty2	%2	Qty3	%3	Qty4	%4	T Qty
0	8290 / 2	Channel	1	100	0	.	0	.	0	.	1 (EA)

Element Inspection Notes:

8290/2 Note: There are no bridge elements in the channel.

A bottom profile has been performed and is included in this report. No scour was found at

This report contains information relating to the physical security of a structure and depictions of the structure. This information is confidential and exempt from public inspection pursuant to sections 119.071(3)(a) and 119.071(3)(b), Florida Statutes. Only the cover page of this report may be inspected and copied.

FLORIDA DEPARTMENT OF TRANSPORTATION
BRIDGE MANAGEMENT SYSTEM
Inspection/CIDR/Bridge Profile Report
Inspection

Structure ID: 770075

DISTRICT: D5 - Deland **INSPECTION DATE: 4/9/2019 NWXR**

this time. The bottom in the vicinity of the bridge was checked for debris. No significant debris was noted. The water depth at time of this inspection was approximately 1.6ft. deep.

MISCELLANEOUS : Other Elements

Str Unit	Elem/Env	Description	Qty1	%1	Qty2	%2	Qty3	%3	Qty4	%4	T Qty
0	321 / 2	Re Conc Approach Slab	4760	99.17	40	0.83	0	.	0	.	4800 sq.ft
0	4000 / 2	Settlement	0	.	40	100	0	.	0	.	40 sq.ft

Element Inspection Notes:

321/2 CS-1 - NO CHANGES
Approach Slabs - The concrete mountable median on the approach slabs and both approach slabs have insignificant cracking throughout.

Approach Roadway - CS-2 - NEW
4000 - There is minor settlement of the approach roadway at the transition to both approach slabs. The settlement is up to 1in. The settlement appears to have been repaired but has started to deteriorate. There is raveling of the approach roadway asphalt adjacent to the approach slabs in the westbound lanes at the west end and the eastbound lanes at the east end. (40ft.) See photo #3.
.

4000/2 Refer to Parent Element

MISCELLANEOUS : Other Elements

Str Unit	Elem/Env	Description	Qty1	%1	Qty2	%2	Qty3	%3	Qty4	%4	T Qty
0	8478 / 2	MSE Walls	371	100	0	.	0	.	0	.	371 ft

Element Inspection Notes:

8478/2 NEW
CS-1 -There are open joints between the wingwall and top of the slope protection on both sides of the bridge. See photo #4.

CS-1 - NO CHANGE
The vertical MSE wall cap adjacent to all of the cheek walls has been repaired (pinned to the wingwalls) to prevent and stop the rotation at these locations.

SUBSTRUCTURE : Substructure

Str Unit	Elem/Env	Description	Qty1	%1	Qty2	%2	Qty3	%3	Qty4	%4	T Qty
0	215 / 2	Re Conc Abutment	246	100	0	.	0	.	0	.	246 ft

Element Inspection Notes:

215/2 No Notes

SUBSTRUCTURE : Substructure

Str Unit	Elem/Env	Description	Qty1	%1	Qty2	%2	Qty3	%3	Qty4	%4	T Qty
0	8394 / 2	R/Conc Abut Slope Protection	1807	99.34	12	0.66	0	.	0	.	1819 (SF)
0	4000 / 2	Settlement	0	.	12	100	0	.	0	.	12 (SF)

Element Inspection Notes:

8394/2 CS-1 - INCREASED
The poured sealant is slightly to moderately deteriorated throughout the concrete slope protection at both ends of the bridge. See photo #5.

This report contains information relating to the physical security of a structure and depictions of the structure. This information is confidential and exempt from public inspection pursuant to sections 119.071(3)(a) and 119.071(3)(b), Florida Statutes. Only the cover page of this report may be inspected and copied.

FLORIDA DEPARTMENT OF TRANSPORTATION
BRIDGE MANAGEMENT SYSTEM
Inspection/CIDR/Bridge Profile Report
Inspection

Structure ID: 770075

DISTRICT: D5 - Deland **INSPECTION DATE: 4/9/2019 NWXR**

NEW
CS-2 - 4000 - There is a washout at the base of the NW corner slope protection. The washout is 6ft. x 2ft. x 2ft. (12sq. ft.) See photo #6.

4000/2 Refer to Parent Element

SUBSTRUCTURE : Substructure

Str Unit	Elem/Env	Description	Qty1	%1	Qty2	%2	Qty3	%3	Qty4	%4	T Qty
0	8396 / 2	Other Abutment Slope Protection	6114	100	0	.	0	.	0	.	6114 (SF)

Element Inspection Notes:

8396/2 Note: The slope protection is constructed of rubble rip rap. There is a 15ft. wide pathway under the west end of the bridge with barrier wall on both sides with aluminum handrails attached to the west wall. There is a sidewalk adjacent to (on the west side) the pathway.

SUPERSTRUCTURE : Bearings

Str Unit	Elem/Env	Description	Qty1	%1	Qty2	%2	Qty3	%3	Qty4	%4	T Qty
0	310 / 2	Elastomeric Bearing	22	100	0	.	0	.	0	.	22 each

Element Inspection Notes:

310/2 No Notes

SUPERSTRUCTURE : Superstructure

Str Unit	Elem/Env	Description	Qty1	%1	Qty2	%2	Qty3	%3	Qty4	%4	T Qty
0	109 / 2	Pre Opn Conc Girder/Beam	758	100	0	.	0	.	0	.	758 ft

Element Inspection Notes:

109/2 No Notes

SUPERSTRUCTURE : Superstructure

Str Unit	Elem/Env	Description	Qty1	%1	Qty2	%2	Qty3	%3	Qty4	%4	T Qty
0	331 / 2	Re Conc Bridge Railing	217	100	0	.	0	.	0	.	217 ft

Element Inspection Notes:

331/2 CS-1- NO CHANGE
There are insignificant cracking throughout both barrier walls.

SUPERSTRUCTURE : Superstructure

Str Unit	Elem/Env	Description	Qty1	%1	Qty2	%2	Qty3	%3	Qty4	%4	T Qty
0	333 / 2	Other Bridge Railing	167	76.96	50	23.04	0	.	0	.	217 ft
0	1120 / 2	Efflorescence/Rust Staining	0	.	50	100	0	.	0	.	50 ft

Element Inspection Notes:

333/2 Note:The outside barrier walls are concrete parapet wall with aluminum handrail. There is an electric utility line on the outside face of the north parapet wall.

CS-2 - NO CHANGE
There are 1/32 in. wide vertical cracks with efflorescence that extend up to the full height of both parapet walls

This report contains information relating to the physical security of a structure and depictions of the structure. This information is confidential and exempt from public inspection pursuant to sections 119.071(3)(a) and 119.071(3)(b), Florida Statutes. Only the cover page of this report may be inspected and copied.

FLORIDA DEPARTMENT OF TRANSPORTATION
BRIDGE MANAGEMENT SYSTEM
Inspection/CIDR/Bridge Profile Report
Inspection

Structure ID: 770075

DISTRICT: D5 - Deland **INSPECTION DATE: 4/9/2019 NWXR**

1120/2	Refer to Parent Element

Total Number of Elements*: 12
*excluding defects/protective systems

This report contains information relating to the physical security of a structure and depictions of the structure. This information is confidential and exempt from public inspection pursuant to sections 119.071(3)(a) and 119.071(3)(b), Florida Statutes. Only the cover page of this report may be inspected and copied.

FLORIDA DEPARTMENT OF TRANSPORTATION
BRIDGE MANAGEMENT SYSTEM
Inspection/CIDR/Bridge Profile Report
Inspection

Structure ID: 770075

DISTRICT: D5 - Deland **INSPECTION DATE: 4/9/2019 NWXR**

Inspector Recommendations

UNIT: 0 **MISCELLANEOUS**

ELEMENT/ENV: 8478 / 2 MSE Walls **ELEM CATEGORY: Other Elements**

CONDITION STATE			PRIORITY
1	MMS Quantity: 20 mh	Element Estimated Quantity: 20 ft	3

WORK ORDER RECOMMENDATION:

Reseal the open joints between the wingwall and top of the slope protection.

UNIT: 0 **SUBSTRUCTURE**

ELEMENT/ENV: 8394 / 2 R/Conc Abut Slope Protection **ELEM CATEGORY: Substructure**

CONDITION STATE			PRIORITY
1 , 2	MMS Quantity: 12 mh	Element Estimated Quantity: 12 (SF)	3

WORK ORDER RECOMMENDATION:

Repair the washout at the base of the NW slope protection.

ELEMENT/ENV: 8394:4000 / 2 Settlement **ELEM CATEGORY: Substructure**

CONDITION STATE			PRIORITY
2	MMS Quantity: 12 mh	Element Estimated Quantity: 40 (SF)	3

WORK ORDER RECOMMENDATION:

Reseal all the open joints in the slope protection on both sides of the bridge.

Structure Notes

Bridge #770074 is west and bridge #770083 is east of this bridge #770075.

On 05-08-19, W.Isidort found the load rating for #770075 applicable.

INSPECTION NOTES: **NWXR** **4/9/2019**

Sufficiency Rating Calculation Accepted by mt538rk at 4/15/2019 7:05:33 AM

This report contains information relating to the physical security of a structure and depictions of the structure. This information is confidential and exempt from public inspection pursuant to sections 119.071(3)(a) and 119.071(3)(b), Florida Statutes. Only the cover page of this report may be inspected and copied.

FLORIDA DEPARTMENT OF TRANSPORTATION
BRIDGE MANAGEMENT SYSTEM
Inspection/CIDR/Bridge Profile Report
Inspection

Structure ID: 770075

DISTRICT: D5 - Deland **INSPECTION DATE: 4/9/2019 NWXR**

Photo #1 - View of patched area in lane 1 and end bent 1.

WORK ORDER RECOMMENDATION:
None

This report contains information relating to the physical security of a structure and depictions of the structure. This information is confidential and exempt from public inspection pursuant to sections 119.071(3)(a) and 119.071(3)(b), Florida Statutes. Only the cover page of this report may be inspected and copied.

FLORIDA DEPARTMENT OF TRANSPORTATION
BRIDGE MANAGEMENT SYSTEM
Inspection/CIDR/Bridge Profile Report
Inspection

Structure ID: 770075

DISTRICT: D5 - Deland **INSPECTION DATE: 4/9/2019 NWXR**

Photo #2 - View of adhesion loss throughout all expansion joints.

WORK ORDER RECOMMENDATION:
None

This report contains information relating to the physical security of a structure and depictions of the structure. This information is confidential and exempt from public inspection pursuant to sections 119.071(3)(a) and 119.071(3)(b), Florida Statutes. Only the cover page of this report may be inspected and copied.

FLORIDA DEPARTMENT OF TRANSPORTATION
BRIDGE MANAGEMENT SYSTEM
Inspection/CIDR/Bridge Profile Report
Inspection

Structure ID: 770075

DISTRICT: D5 - Deland **INSPECTION DATE: 4/9/2019 NWXR**

Photo #3 - Typical of raveling of the approach roadway asphalt adjacent to both approach slabs.

WORK ORDER RECOMMENDATION:
None

This report contains information relating to the physical security of a structure and depictions of the structure. This information is confidential and exempt from public inspection pursuant to sections 119.071(3)(a) and 119.071(3)(b), Florida Statutes. Only the cover page of this report may be inspected and copied.

FLORIDA DEPARTMENT OF TRANSPORTATION
BRIDGE MANAGEMENT SYSTEM
Inspection/CIDR/Bridge Profile Report
Inspection

Structure ID: 770075

DISTRICT: D5 - Deland **INSPECTION DATE: 4/9/2019 NWXR**

Photo #4 - View of open joints between the wingwall and slope protection both sides of the bridge.

WORK ORDER RECOMMENDATION:
Reseal all the open joints between the wingwall and slope protection.

This report contains information relating to the physical security of a structure and depictions of the structure. This information is confidential and exempt from public inspection pursuant to sections 119.071(3)(a) and 119.071(3)(b), Florida Statutes. Only the cover page of this report may be inspected and copied.

FLORIDA DEPARTMENT OF TRANSPORTATION
BRIDGE MANAGEMENT SYSTEM
Inspection/CIDR/Bridge Profile Report
Inspection

Structure ID: 770075

DISTRICT: D5 - Deland **INSPECTION DATE: 4/9/2019 NWXR**

Photo #5 - View of open joints on the slope protection on both sides of the bridge.

WORK ORDER RECOMMENDATION:
Reseal all the open joint on the slope protection.

This report contains information relating to the physical security of a structure and depictions of the structure. This information is confidential and exempt from public inspection pursuant to sections 119.071(3)(a) and 119.071(3)(b), Florida Statutes. Only the cover page of this report may be inspected and copied.

FLORIDA DEPARTMENT OF TRANSPORTATION
BRIDGE MANAGEMENT SYSTEM
Inspection/CIDR/Bridge Profile Report
Inspection

Structure ID: 770075

DISTRICT: D5 - Deland **INSPECTION DATE: 4/9/2019 NWXR**

Photo #6 - Washout on the NW corner at the base of the slope protection.

WORK ORDER RECOMMENDATION:
Repair the washout at the base of the NW slope protection.

This report contains information relating to the physical security of a structure and depictions of the structure. This information is confidential and exempt from public inspection pursuant to sections 119.071(3)(a) and 119.071(3)(b), Florida Statutes. Only the cover page of this report may be inspected and copied.

FLORIDA DEPARTMENT OF TRANSPORTATION
BRIDGE MANAGEMENT SYSTEM
Inspection/CIDR/Bridge Profile Report
CIDR

REPORT ID: INSP005
Structure ID: 770075
DATE PRINTED: 5/13/2019

Description

Structure Unit Identification

Bridge/Unit Key: 770075 0
Structure Name: SR-414 - Little Wekiva River
Description: MAIN SPAN 1
Type: M - Main

Roadway Identification

NBI Structure No (8): 770075
Position/Prefix (5): 1 - Route On Structure
Kind Hwy (Rte Prefix): 3 State Hwy
Design Level of Service: 1 Mainline
Route Number/Suffix: 00414 / 0 N/A (NBI)
Feature Intersect (6): Little Wekiva River
Critical Facility: Not Defense-crit
Facility Carried (7): SR-414
Mile Point (11): 37.805
Latitude (16): 028d38'25.5" Long (17): 081d25'28.7"

Roadway Traffic and Accidents

Lanes (28): 4 Medians: 1 Speed: 45 mph
ADT Class: 4 ADT Class 4
Recent ADT (29): 48500 Year (30): 2017
Future ADT (114): 84148 Year (115): 2039
Truck % ADT (109): 6
Detour Length (19): 1.0 mi
Detour Speed: 45 mph
Accident Count: 0 Rate: 0

Roadway Classification

Nat. Hwy Sys (104): 0 Not on NHS
National base Net (12): 0 - Not on Base Network
LRS Inventory Rte (13a): 77 002 000 Sub Rte (13b): 00
Functional Class (26): 06 Rural Minor Arterial
On Federal Aid System: Yes
Defense Hwy (100): 0 Not a STRAHNET hwy
Direction of Traffic (102): 2 2-way traffic
Emergency: [X]

Roadway Clearances

Vertical (10): 99.99 ft Appr. Road (32): 63.8 ft
Horiz. (47): 107.12 ft Roadway (51): 87.4 ft
Truck Network (110): 0 Not part of natl netwo
Toll Facility (20): 3 On free road
Fed. Lands Hwy (105): 0 N/A (NBI)
School Bus Route: [ ]
Transit Route: [ ]

NBI Project Data

Proposed Work (075A): Not Applicable (P)
Work To Be Done By (075B): Not Applicable (P)
Improvement Length (076): 0 ft

Improvement Cost (094): $ 0.00
Roadway Improvement Cost (095): $ 0.00
Total Cost (096): $ 0.00
Year of Estimate (097):

NBI Rating

Channel (61): 7 Minor Damage
Deck (58): 7 Good
Superstructure (59): 7 Good
Substructure (60): 7 Good

Culvert (62): N N/A (NBI)
Waterway (71): 6 Equal Minimum
Unrepaired Spalls: -1 sq.ft.
Review Required: [X]

This report contains information relating to the physical security of a structure and depictions of the structure. This information is confidential and exempt from public inspection pursuant to sections 119.071(3)(a) and 119.071(3)(b), Florida Statutes. Only the cover page of this report may be inspected and copied.

FLORIDA DEPARTMENT OF TRANSPORTATION
BRIDGE MANAGEMENT SYSTEM
Inspection/CIDR/Bridge Profile Report
CIDR

REPORT ID: INSP005
Structure ID: 770075
DATE PRINTED: 5/13/2019

Structure Identification

Admin Area: METROPLAN Orlando
District (2): D5 - Deland
County (3): (77)Seminole
Place Code (4): Altamonte Springs
Location (9): SR-414 -Little Wekiva Ri
Border Br St/Reg (98): Not Applicable (P) Share: 0 %
Border Struct No (99):
FIPS State/Region (1): 12 Florida Region 4-Atlanta
NBIS Bridge Len (112): Y - Meets NBI Length

Parallel Structure (101): No || bridge exists
Temp. Structure (103): Not Applicable (P)
Maint. Resp. (21): 1 State Highway Agency
Owner (22): 1 State Highway Agency
Historic Signif. (37): 5 Not eligible for NRHP

Geometrics

Spans in Main Unit (45): 1
Approach Spans (46): 0
Length of Max Span (48): 68.9 ft
Structure Length (49): 70.9 ft
Total Length: 108.9 ft
Deck Area: 8559.87 sqft
Structure Flared (35): 0 No flare

Age and Service

Year Built (27): 2000
Year Reconstructed (106): 0
Type of Service On (42a): 1 Highway
Under (42b): 5 Waterway
Fracture Critical Details: Not Applicable

Structure Type and Material

Curb/Sidewalk (50): Left: 5 ft Right: 5 ft
Bridge Median (33): 2 Closed Med w/o Barrier
Main Span Material (43A): 5 Prestressed Concrete
Appr Span Material (44A): Not Applicable
Main Span Design (43B): 02 Stringer/Girder
Appr Span Design (44B): Not Applicable

Deck Type and Material

Deck Width (52): 120.73 ft
Skew (34): 0 deg
Deck Type (107): 1 Concrete-Cast-in-Place
Surface (108): 1 Monolithic Concrete
Membrane: 0 None
Deck Protection: None

Appraisal

Structure Appraisal

Open/Posted/Closed (41): A Open, no restriction
Deck Geometry (68): 9 Above Desirable Crit
Underclearances (69): N Not applicable (NBI)
Approach Alignment (72): 8-No Speed Red thru Curv
Bridge Railings (36a): 1 Meets Standards
Transitions (36b): 1 Meets Standards

Approach Guardrail (36c): 1 Meets Standards
Approach Guardrail Ends (36d): 1 Meets Standards
Scour Critical (113): 5 Stable w/in footing

Navigation Data

Navigation Control (38): Permit Not Required
Nav Vertical Clr (39): 0 ft
Nav Horizontal Clr (40): 0 ft
Min Vert Lift Clr (116): 0 ft
Pier Protection (111): 1 Not Required

NBI Condition Rating

Sufficiency Rating: 96.3
Health Index: 99.82
Structural Eval (67): 7 Above Min Criteria
Deficiency: Not Deficient

Minimum Vertical Clearance

Over Structure (53): 99.99 ft
Under (reference) (54a): N Feature not hwy or RR
Under (54b): 0 ft

Minimum Lateral Underclearance

Reference (55a): N Feature not hwy or RR
Right Side (55b): 0 ft
Left Side (56): 0 ft

Schedule

Current Inspection

Inspection Date: 04/09/2019
Inspector: MT538RK - Ronald Kneale
Bridge Group: 000265
Alt. Bridge Group:
Primary Type: Regular NBI
Review Required: X

Next Inspection Date Scheduled

NBI: 04/09/2021
Element: 04/09/2021
Fracture Critical:
Underwater:
Other/Special:

This report contains information relating to the physical security of a structure and depictions of the structure. This information is confidential and exempt from public inspection pursuant to sections 119.071(3)(a) and 119.071(3)(b), Florida Statutes. Only the cover page of this report may be inspected and copied.

FLORIDA DEPARTMENT OF TRANSPORTATION
BRIDGE MANAGEMENT SYSTEM
Inspection/CIDR/Bridge Profile Report
CIDR

REPORT ID: INSP005
Structure ID: 770075
DATE PRINTED: 5/13/2019

Schedule Cont.

Inspection Types Performed NBI [X] Element [X] Fracture Critical [ ] Underwater [ ] Other Special [ ]

Inspection Intervals	Required (92)	Frequency (92)		Last Date (93)		Inspection Resources	
Fracture Critical	[ ]	mos				Crew Hours:	10
Underwater	[ ]	mos				Flagger Hours:	0
Other Special	[ ]	mos				Helper Hours:	0
NBI		24 mos	(91)	04/09/2019	(90)	Snooper Hours:	0
						Special Crew Hours:	0
						Special Equip Hours:	0

Bridge Related

General Bridge Information

Parallel Bridge Seq:
Channel Depth: 1.6 ft
Radio Frequency: -1
Phone Number:
Exception Date:
Exception Type: Unknown
Accepted By Maint: 12/13/2000
Warranty Expiration: 00/00/0000
Performance Rating: Good

Bridge Rail 1: Conc parapet-alum-rail
Bridge Rail 2: Concrete jersey type
Electrical Devices: No electric service
Culvert Type: Not applicable
Maintenance Yard: 593-Oviedo Sub-Yard
FIHS ON / OFF: No Routes on FIHS
Previous Structure:
2nd Previous Structure:
Replacement Structure:

Permitted Utilities: Power [ ] Water [ ] Gas [ ] Fiber Optic [ ] Sewage [ ] Other [ ]

Bridge Load Rating Information

Inventory Type (065): 1 LF Load Factor
Operating Type (063): 1 LF Load Factor
Original Design Load (031): 5 MS 18 (HS 20)
Date: 06/22/2000
Initials: ys
Load Rating Rev. Recom.: No
Load Rating Plans Status: Built

Inventory Rating (066): 45.7 tons
Operating Rating (064): 76.2 tons
FL120 Permit Rating: -1.0 tons
HS20/FL120 Max Span Rating: 76.2 tons
Dynamic Impact in Percent: 26 %
Governing Span Length: 66.9 ft
Minimum Span Length:
Distribution Method: AASHTO formula

Load Rating Notes:

LEGAL LOADS

SU2: 66.1 tons
SU3: 68.3 tons
SU4: 68.3 tons
C3: 82.7 tons
C4: 82.7 tons
C5: 83.8 tons
ST5: 98.1 tons
Posting (070): 5 At/Above Legal Loads
Open/Posted/Closed (041): A Open, no restriction

POSTING

Recom. SU Posting: 99 tons
Recom. C Posting: 99 tons
Recom. ST5 Posting: 99 tons
Actual SU Posting: 99 tons
Actual C Posting: 99 tons
Actual ST5 Posting: 99 tons
Actual Blanket Posting: 99 tons
Emergency Vehicle: 1 EV inapplicable

FLOOR BEAM (FB) FB Present: No

FB Span Length, Gov:
FB Spacing, Gov:
FB OPR Rating: 0.0 tons
FB SU4 OPR Rating:
FB FL120 Rating:

SEGMENTAL (SEG)

SEG Wing-Span: -1.0 ft
SEG Web-to-Web Span: -1.0 ft
SEG Transverse HL93 Operating: -1.00 RF

Bridge Scour and Storm Information

Pile Driving Record: All pile driving records
Foundation Type: Foundation details
Mode of Flow: Riverine
Rating Scour Eval: Not Applicable
Highest Scour Eval: No phase completed
Scour Evaluation Method: Standard Scour Eval

Scour Recommended I: Not Applicable
Scour Recommended II: Not Applicable
Scour Recommended III: Not Applicable
Scour Elevation: 53 ft
Action Elevation: 53 ft
Storm Frequency: 100

This report contains information relating to the physical security of a structure and depictions of the structure. This information is confidential and exempt from public inspection pursuant to sections 119.071(3)(a) and 119.071(3)(b), Florida Statutes. Only the cover page of this report may be inspected and copied.

FLORIDA DEPARTMENT OF TRANSPORTATION
BRIDGE MANAGEMENT SYSTEM

REPORT ID: INSP005

Inspection/CIDR/Bridge Profile Report

Structure ID: 770075

CIDR

DATE PRINTED: 5/13/2019

Elements

Inspection Date: 04/09/2019 **NWXR**

DECKS : Decks/Slabs

Str Unit	Elem/Env	Description	Qty1	%1	Qty2	%2	Qty3	%3	Qty4	%4	T Qty
0	12 / 2	Re Concrete Deck	8560	100	0	.	0	.	0	.	8560 sq.ft

DECKS : Joints

Str Unit	Elem/Env	Description	Qty1	%1	Qty2	%2	Qty3	%3	Qty4	%4	T Qty
0	301 / 2	Pourable Joint Seal	150	63.56	80	33.9	6	2.54	0	.	236 ft
0	2320 / 2	Seal Adhesion	0	.	80	100	0	.	0	.	80 ft
0	2360 / 2	Adjacent Deck or Header	0	.	0	.	6	100	0	.	6 ft

MISCELLANEOUS : Channel

Str Unit	Elem/Env	Description	Qty1	%1	Qty2	%2	Qty3	%3	Qty4	%4	T Qty
0	8290 / 2	Channel	1	100	0	.	0	.	0	.	1 (EA)

MISCELLANEOUS : Other Elements

Str Unit	Elem/Env	Description	Qty1	%1	Qty2	%2	Qty3	%3	Qty4	%4	T Qty
0	321 / 2	Re Conc Approach Slab	4760	99.17	40	0.83	0	.	0	.	4800 sq.ft
0	4000 / 2	Settlement	0	.	40	100	0	.	0	.	40 sq.ft

MISCELLANEOUS : Other Elements

Str Unit	Elem/Env	Description	Qty1	%1	Qty2	%2	Qty3	%3	Qty4	%4	T Qty
0	8478 / 2	MSE Walls	371	100	0	.	0	.	0	.	371 ft

SUBSTRUCTURE : Substructure

Str Unit	Elem/Env	Description	Qty1	%1	Qty2	%2	Qty3	%3	Qty4	%4	T Qty
0	215 / 2	Re Conc Abutment	246	100	0	.	0	.	0	.	246 ft

SUBSTRUCTURE : Substructure

Str Unit	Elem/Env	Description	Qty1	%1	Qty2	%2	Qty3	%3	Qty4	%4	T Qty
0	8394 / 2	R/Conc Abut Slope Protection	1807	99.34	12	0.66	0	.	0	.	1819 (SF)
0	4000 / 2	Settlement	0	.	12	100	0	.	0	.	12 (SF)

SUBSTRUCTURE : Substructure

Str Unit	Elem/Env	Description	Qty1	%1	Qty2	%2	Qty3	%3	Qty4	%4	T Qty
0	8396 / 2	Other Abutment Slope Protection	6114	100	0	.	0	.	0	.	6114 (SF)

SUPERSTRUCTURE : Bearings

Str Unit	Elem/Env	Description	Qty1	%1	Qty2	%2	Qty3	%3	Qty4	%4	T Qty
0	310 / 2	Elastomeric Bearing	22	100	0	.	0	.	0	.	22 each

SUPERSTRUCTURE : Superstructure

Str Unit	Elem/Env	Description	Qty1	%1	Qty2	%2	Qty3	%3	Qty4	%4	T Qty
0	109 / 2	Pre Opn Conc Girder/Beam	758	100	0	.	0	.	0	.	758 ft

SUPERSTRUCTURE : Superstructure

Str Unit	Elem/Env	Description	Qty1	%1	Qty2	%2	Qty3	%3	Qty4	%4	T Qty
0	331 / 2	Re Conc Bridge Railing	217	100	0	.	0	.	0	.	217 ft

This report contains information relating to the physical security of a structure and depictions of the structure. This information is confidential and exempt from public inspection pursuant to sections 119.071(3)(a) and 119.071(3)(b), Florida Statutes. Only the cover page of this report may be inspected and copied.

FLORIDA DEPARTMENT OF TRANSPORTATION
BRIDGE MANAGEMENT SYSTEM

REPORT ID: INSP005

Inspection/CIDR/Bridge Profile Report

Structure ID: 770075

CIDR

DATE PRINTED: 5/13/2019

SUPERSTRUCTURE : Superstructure

Str Unit	Elem/Env	Description	Qty1	%1	Qty2	%2	Qty3	%3	Qty4	%4	T Qty
0	333 / 2	Other Bridge Railing	167	76.96	50	23.04	0	.	0	.	217 ft
0	1120 / 2	Efflorescence/Rust Staining	0	.	50	100	0	.	0	.	50 ft

Total Number of Elements*: 12
*excluding defects/protective systems

Inspection Information

Inspection Date: 04/09/2019 **Type:** Regular NBI

Inspector: MT538RK - Ronald Kneale

Inspection Notes:

Sufficiency Rating Calculation Accepted by mt538rk at 4/15/2019 7:05:33 AM

Structure Notes

Bridge #770074 is west and bridge #770083 is east of this bridge #770075.

On 05-08-19, W.Isidort found the load rating for #770075 applicable.

Schedule Notes

This report contains information relating to the physical security of a structure and depictions of the structure. This information is confidential and exempt from public inspection pursuant to sections 119.071(3)(a) and 119.071(3)(b), Florida Statutes. Only the cover page of this report may be inspected and copied.

REPORT ID : INSP005

Structure ID : 770075

FLORIDA DEPARTMENT OF TRANSPORTATION BRIDGE MANAGEMENT SYSTEM

Inspection/CIDR/Bridge Profile Report

Bridge Profile

DATE PRINTED: 5/13/2019 2:58:42 PM

Left Profile by Inspection

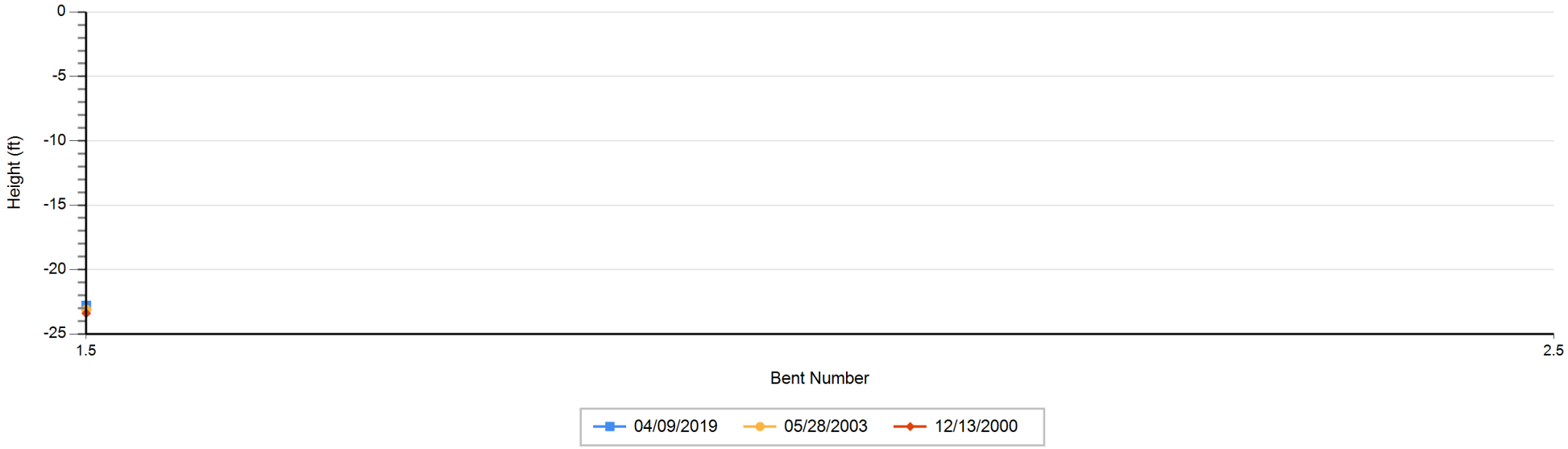

Right Profile by Inspection

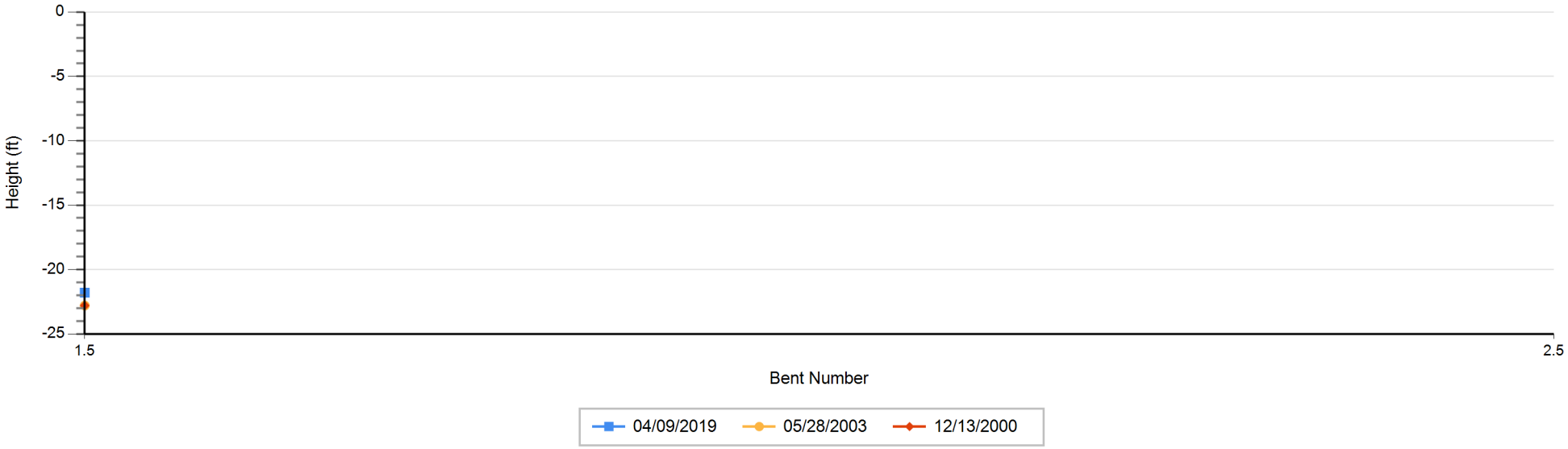

This report contains information relating to the physical security of a structure and depictions of the structure. This information is confidential and exempt from public inspection pursuant to sections 119.071(3)(a) and 119.071(3)(b), Florida Statutes. Only the cover page of this report may be inspected and copied.

REPORT ID : INSP005

Structure ID : 770075

FLORIDA DEPARTMENT OF TRANSPORTATION BRIDGE MANAGEMENT SYSTEM

Inspection/CIDR/Bridge Profile Report

Bridge Profile

DATE PRINTED: 5/13/2019 2:58:42 PM

Profile Data - Numerical Summary

(All Heights are in Feet)

Inspection Date and Key: 4/9/2019 NWXR

Bent #	Left Height	Right Height
1.5	22.80	21.80

Air Temp: 79

Profile Notes:

All measurements were taken from the concrete parapet wall.
The water line measurement was 22.0ft. on both sides of the bridge.

Inspection Date and Key: 5/28/2003 ZNJS

Bent #	Left Height	Right Height
1.5	23.10	22.80

Air Temp:

Profile Notes:

Degradation / Aggradation measurements were take from the concrete parapet wall.
The water measurement are Left- 22.7ft. and Right- 22.0ft.

Inspection Date and Key: 12/13/2000 BEVV

Bent #	Left Height	Right Height
1.5	23.40	22.80

Air Temp: 0

Profile Notes:

Degradation / Aggradation measurements were take from the concrete parapet wall.
The water measurement are Left- 22.8ft. and Right- 22.4ft.

This report contains information relating to the physical security of a structure and depictions of the structure. This information is confidential and exempt from public inspection pursuant to sections 119.071(3)(a) and 119.071(3)(b), Florida Statutes. Only the cover page of this report may be inspected and copied.

STATE OF FLORIDA DEPARTMENT OF TRANSPORTATION

METRIC LOAD CAPACITY INFORMATION METRIC

FORM 850-010-06
MAINTENANCE - 09/95

1. **BRIDGE DATA:**
Bridge Number 770075 Date 6/22/00
STR Type Main [BID Item B1(43)] 502 STR Type APR [BID Item B2(44)] 000

2. **POSTING DATA:**
Posted NO If yes, Existing Restrictions ____ BID Item H8(41) A
Posting Needed NO If Yes, Proposed Restrictions ____ BID Item H11(70) 5 BID Item H7(31) 5

3. **ANALYSIS DATA:**

A. Method of Analysis:
- X Load Factor
- ___ Working Stress

B. Analysis System:
- X BARS
- ___ SALOD
- ___ BRUFEM
- ___ Load Test
- X Other AASHTO LLDF

C. Analysis Based On:
- X Design Drawings
- ___ As-Built Record Plans
- ___ Shop Drawings
- ___ Field Measurement
- ___ Catalogs
- ___ Sample Testing
- ___ Other ____

D. Data Stored:
- ___ District Office
- ___ Central Office
- ___ Microfilm
- ___ Bridge Owner
- ___ Materials Test Lab
- X Other S&F

E. Controlling Member Analyzed:

Material:
- ___ Steel
- 1 Concrete
  - ___ Cast in Place
  - 1 Precast
  - 1 Prestressed
  - ___ Post Tensioned
- ___ Timber
- ___ Other ____

Function:
- ___ Slab
- ___ Stringer
- ___ Floor Beam
- 1 Girder
- ___ Culvert
- ___ Truss

Substructure:
- ___ Bent Construction
  - ___ Piling
  - ___ Cap
- ___ Pier Construction
  - ___ Piling
  - ___ Footing
  - ___ Column
- ___ Cap

Span:
- 1 Simple
- ___ Continuous
- ___ Frame

Slab:
- ___ Non-Composite
- 1 Composite

Shape:
- ___ Rolled
- ___ Built-up Welded
- ___ Built-up Riveted
- ___ Box Shape
- 1 AASHTO Girders
- ___ Other ____

Impact Factor: 26%

B.I.D. Item H2B 1
B.I.D. Item H9A 1
B.I.D. Item H10A 1

4. **Load Rating Summary Table:**

LOAD RATING SUMMARY FOR OPERATING RATING
(GROSS TONS)

VEHICLE TYPE Metric Tons (U.S. Tons)	METRIC RATING	U.S. RATING	RATING FACTOR	SPAN NO.	SPAN LENGTH	CONTR. MEMBER	M OR V	LLDF
SU2 - 15.4(17.0)	60	66	3.849	1	20.4	1	V	2.015
SU3 - 29.9 (33.0)	62	69	2.091	1	20.4	1	M	2.015
SU4 - 31.8 (35.0)	62	68	1.959	1	20.4	1	M	2.015
C3 - 25.4 (28.0)	75	83	2.982	1	20.4	1	M	2.015
C4 - 33.2 (36.6)	75	83	2.269	1	20.4	1	V	2.015
C5 - 36.3 (40.0)	76	84	2.109	1	20.4	1	V	2.015
ST5 - 36.3 (40.0)	89	98	2.452	1	20.4	1	V	2.015
HS20 - 32.7 (36.0)	69.2	76.2	2.119	1	20.4	1	M	2.015
HS20 - Inventory Rating	41.5	45.7	1.271					

t = Metric Ton = 1,000 kg T = U.S. Ton = 2,000 pounds Mass

5. **Comments:**

6. **Computations:**
Performed By [signature] Date 11/3/99
Checked By ____ Date ____
Reviewed By ____ Date ____

7. **Responsible Engineer:** [signature]
P.E. # 20234 Date 6/22/00

STATE OF FLORIDA DEPARTMENT OF TRANSPORTATION

METRIC LOAD CAPACITY INFORMATION METRIC

FORM 850-010-06
MAINTENANCE - 09/95

1. **BRIDGE DATA:**
Bridge Number 770075 Date 6/22/00
STR Type Main [BID Item B1(43)] 502 STR Type APR [BID Item B2(44)] 000

2. **POSTING DATA:**
Posted NO If yes, Existing Restrictions _____ BID Item H8(41) A
Posting Needed NO If Yes, Proposed Restrictions _____ BID Item H11(70) 5 BID Item H7(31) 5

3. **ANALYSIS DATA:**

A. Method of Analysis:
- X Load Factor
- ___ Working Stress

B. Analysis System:
- X BARS
- ___ SALOD
- ___ BRUFEM
- ___ Load Test
- X Other AASHTO LLDF

C. Analysis Based On:
- X Design Drawings
- ___ As-Built Record Plans
- ___ Shop Drawings
- ___ Field Measurement
- ___ Catalogs
- ___ Sample Testing
- ___ Other _____

D. Data Stored:
- ___ District Office
- ___ Central Office
- ___ Microfilm
- ___ Bridge Owner
- ___ Materials Test Lab
- X Other S&F

E. Controlling Member Analyzed:

Material:
- ___ Steel
- / Concrete
  - ___ Cast in Place
  - / Precast
  - / Prestressed
  - ___ Post Tensioned
- ___ Timber
- ___ Other _____

Function:
- ___ Slab
- ___ Stringer
- ___ Floor Beam
- / Girder
- ___ Culvert
- ___ Truss

Substructure:
- ___ Bent Construction
  - ___ Piling
  - ___ Cap
- ___ Pier Construction
  - ___ Piling
  - ___ Footing
  - ___ Column
- ___ Cap

Span:
- / Simple
- ___ Continuous
- ___ Frame

Slab:
- ___ Non-Composite
- / Composite

Shape:
- ___ Rolled
- ___ Built-up Welded
- ___ Built-up Riveted
- ___ Box Shape
- / AASHTO Girders
- ___ Other _____

Impact Factor: 26.1

B.I.D. Item H2B 1
B.I.D. Item H9A 1
B.I.D. Item H10A 1

4. **Load Rating Summary Table:**

LOAD RATING SUMMARY FOR OPERATING RATING
(GROSS TONS)

VEHICLE TYPE Metric Tons (U.S. Tons)	METRIC RATING	U.S. RATING	RATING FACTOR	SPAN NO.	SPAN LENGTH	CONTR. MEMBER	M OR V	LLDF
SU2 - 15.4(17.0)	60	66	3.849	1	20.4	1	V	2.015
SU3 - 29.9 (33.0)	62	69	2.091	1	20.4	1	M	2.015
SU4 - 31.8 (35.0)	62	68	1.959	1	20.4	1	M	2.015
C3 - 25.4 (28.0)	75	83	2.982	1	20.4	1	M	2.015
C4 - 33.2 (36.6)	75	83	2.269	1	20.4	1	V	2.015
C5 - 36.3 (40.0)	76	84	2.109	1	20.4	1	V	2.015
ST5 - 36.3 (40.0)	89	98	2.452	1	20.4	1	V	2.015
HS20 - 32.7 (36.0)	69.2	76.2	2.119	1	20.4	1	M	2.015
HS20 - Inventory Rating	41.5	45.7	1.271					

t = Metric Ton = 1,000 kg T = U.S. Ton = 2,000 pounds Mass

5. **Comments:**

6. **Computations:**
Performed By [signature] Date 11/3/99
Checked By _____ Date _____
Reviewed By [signature] Date _____

7. **Responsible Engineer:** [signature]
P.E. # 20234 Date 6/22/00

BARS-PC R5.5-MOD 3.0

```
                                   RECORD                                                    REC.NO.
01      031199YYS                AA                                  *LFS    POST             100
02770075                                 CPS   98X   681005X  106000001                      100
05770075        5117SR 414  77002     557490DRMP                                              200
067700751 MAITLAND BLVD OVER LITLE WEKIVA RIVER                                               300
067700752 G01=B3 AASHTO BEAM TYPE 4 26-1/2"DIA.270 KSI.LOW LAX  HS20                          400
07770075     6000004500          45.001.105  27005500                                         500
08770075G01 01   X   670384                    CPS          2.015                             600
09770075G01  X   167596B                                                                      700
10770075G01 01                  W302.6     X   670384                                        800
11770075G01 0101X   67038401                                                                  900
14770075G01 0101X   670384C  01   155.608.020.00.9496.0008.04.940                            1000
15770075G01  01                  540020008006000800900008026001L 1108 03.00                  1100
15770075G01  01                                                  02L 1108 05.00              1200
15770075G01  01                                                  03L  308 07.00              1300
15770075G01  01                  540020008006000800900008026004L  108 09.00                  1400
17770075G01 01S01X    01598     01B  204  01X    01598                                        1500
17770075G01 01S02X    07500     01B  204  03X    02500                                        1600
17770075G01 01S03X    32500     01B  104  13X    02500                                        1700
17770075G01 01S04X   125000     01B  104  25X    05000                                        1800
17770075G01 01S05X    67500     01B  104  09X    07500                                        1900
17770075G01 01S06X   100000     01B  104  10X    10000                                        2000
17770075G01 01S07X    02188     01B  104  02X    01094                                        2100
17770075G01 01S08X   100000     01B  104  10X    10000                                        2200
17770075G01 01S09X    67500     01B  104  09X    07500                                        2300
17770075G01 01S10X   125000     01B  104  25X    05000                                        2400
17770075G01 01S11X    32500     01B  104  13X    02500                                        2500
17770075G01 01S12X    07500     01B  204  03X    02500                                        2600
17770075G01 01S13X    01598     01B  204  01X    01598                                        2700
```

THE FOLLOWING STRUCTURES WERE SELECTED

770075

JR

A770075.DAT

LIVE LOAD DATA AT MOMENT CHECK POINT FOR
COMPOSITE PRESTRESSED CONCRETE FLEXURAL MEMBER - LOAD FACTOR RATING

DATE 3/11/99

D/P STRUCTURE I.D. = 770-075
MEMBER I.D. -- G 1
C.P. LOCATION -- 1.00

***** LIVE LOAD CALCULATIONS (IMPACT FACTOR = .260 FOR +BEND AND = .260 FOR -BEND)

-- LIVE LOAD --

LIVE LOAD			TRUCK MOMENT REDIS LL+I FT-KIPS	TRUCK MOMENT LL+IMP FT-KIPS	TRUCK MOMENT LL FT-KIPS	TRUCK MOMENT LOC.NO. 1 WHEEL FT.	DIR	LANE MOMENT LL+IMP FT-KIPS	LANE MOMENT LL FT-KIPS	LANE MOMENT LOC.CONC. LOAD #1 FT.	LANE MOMENT LOC.CONC. LOAD #2 FT.	FIXED SHEAR +V KIPS	FIXED SHEAR -V KIPS	SHEAR LEFT KIPS	SHEAR RIGHT KIPS
INV.	HS20	+BEND	.00	.0	.0	.000	L	.0	.0	.000	.000	.00	.00	.00	78.70
		-BEND	.00	.0	.0	.000	L	.0	.0	.000	.000	.00	.00		
OPER	HS20	+BEND	.00	.0	.0	.000	L	.0	.0	.000	.000	.00	.00	.00	78.70
		-BEND	.00	.0	.0	.000	L	.0	.0	.000	.000	.00	.00		
OPER 2	ST5	+BEND	.00	.0	.0	19.519		.0	.0	.000	.000	.00	.00	.00	70.97
		-BEND	.00	.0	.0	.000		.0	.0	.000	.000	.00	.00		
POST 1	SU2	+BEND	.00	.0	.0	.000	L					.00	.00	.00	40.22
		-BEND	.00	.0	.0	.000	L					.00	.00		
POST 4	SU3	+BEND	.00	.0	.0	33.519						.00	.00	.00	75.75
		-BEND	.00	.0	.0	.000						.00	.00		
POST 2	SU4	+BEND	.00	.0	.0	.000	L					.00	.00	.00	79.85
		-BEND	.00	.0	.0	.000	L					.00	.00		
POST 5	C3	+BEND	.00	.0	.0	33.520						.00	.00	.00	55.96
		-BEND	.00	.0	.0	.000						.00	.00		
POST 3	C4	+BEND	.00	.0	.0	.000	L					.00	.00	.00	75.53
		-BEND	.00	.0	.0	.000	L					.00	.00		
POST 6	C5	+BEND	.00	.0	.0	33.520						.00	.00	.00	81.89
		-BEND	.00	.0	.0	.000						.00	.00		

DATE 3/11/99

LIVE LOAD DATA AT MOMENT CHECK POINT FOR
COMPOSITE PRESTRESSED CONCRETE FLEXURAL MEMBER - LOAD FACTOR RATING

D/P STRUCTURE I.D. = 770-075
MEMBER I.D. -- G 1
C.P. LOCATION -- 1.00

***** RATING FACTOR *****

		-- RATING FACTOR FOR -- MOMENT TOP +BEND	TOP -BEND	BOTT +BEND	BOTT -BEND	-- RATING FACTOR FOR -- SHEAR LEFT	SHEAR RIGHT	RATING VALUE	SAFE LOAD CAP.(TONS)
INV.	HS20	999.000	.000	999.000	.000	999.000	3.917	HS 78.3	141.0
OPER	HS20	999.000	.000	999.000	.000	999.000	6.528	HS130.6	235.0
OPER 2	ST5	.000	.000	.000	.000	999.000	7.239	.0	289.6
POST 1	SU2	999.000	.000	999.000	.000	999.000	12.774		217.2
POST 4	SU3	.000	.000	.000	.000	999.000	6.782		223.8
POST 2	SU4	999.000	.000	999.000	.000	999.000	6.434		225.2
POST 5	C3	.000	.000	.000	.000	999.000	9.181		257.1
POST 3	C4	999.000	.000	999.000	.000	999.000	6.802		249.3
POST 6	C5	.000	.000	.000	.000	999.000	6.274		251.0

DATE 3/11/99

LIVE LOAD DATA AT MOMENT CHECK POINT FOR
COMPOSITE PRESTRESSED CONCRETE FLEXURAL MEMBER - LOAD FACTOR RATING

D/P STRUCTURE I.D. = 770-075
MEMBER I.D. -- G 1
C.P. LOCATION -- 1.25

***** LIVE LOAD CALCULATIONS (IMPACT FACTOR = .260 FOR +BEND AND = .260 FOR -BEND)

-- LIVE LOAD --

LIVE LOAD			TRUCK MOMENT REDIS LL+I FT-KIPS	TRUCK MOMENT LL+IMP FT-KIPS	TRUCK MOMENT LL FT-KIPS	TRUCK MOMENT LOC.NO. 1 WHEEL FT.	DIR	LANE MOMENT LL+IMP FT-KIPS	LANE MOMENT LL FT-KIPS	LANE MOMENT LOC.CONC. LOAD #1 FT.	LANE MOMENT LOC.CONC. LOAD #2 FT.	FIXED SHEAR +V KIPS	FIXED SHEAR -V KIPS	SHEAR LEFT KIPS	SHEAR RIGHT KIPS
INV.	HS20	+BEND	.00	935.9	742.5	44.760	R	629.7	499.6	16.760	.000	.00	.00	57.60	56.94
		-BEND	.00	.0	.0	.000	L	.0	.0	.000	.000	.00	.00		
OPER	HS20	+BEND	.00	935.9	742.5	44.760	R	629.7	499.6	16.760	.000	.00	.00	57.60	56.94
		-BEND	.00	.0	.0	.000	L	.0	.0	.000	.000	.00	.00		
OPER 2	ST5	+BEND	.00	806.4	639.8	-10.240		.0	.0	.000	.000	.00	.00	49.62	49.06
		-BEND	.00	.0	.0	.000		.0	.0	.000	.000	.00	.00		
POST 1	SU2	+BEND	.00	493.2	391.3	29.760	R					.00	.00	30.35	30.01
		-BEND	.00	.0	.0	.000	L					.00	.00		
POST 4	SU3	+BEND	.00	918.4	728.7	31.926						.00	.00	56.52	55.88
		-BEND	.00	.0	.0	.000						.00	.00		
POST 2	SU4	+BEND	.00	965.9	766.3	34.260	R					.00	.00	59.44	58.77
		-BEND	.00	.0	.0	.000	L					.00	.00		
POST 5	C3	+BEND	.00	639.9	507.7	6.760						.00	.00	39.38	38.93
		-BEND	.00	.0	.0	.000						.00	.00		
POST 3	C4	+BEND	.00	875.8	694.9	52.760	R					.00	.00	53.90	53.29
		-BEND	.00	.0	.0	.000	L					.00	.00		
POST 6	C5	+BEND	.00	946.7	751.2	52.760						.00	.00	58.27	57.61
		-BEND	.00	.0	.0	.000						.00	.00		

LIVE LOAD DATA AT MOMENT CHECK POINT FOR
COMPOSITE PRESTRESSED CONCRETE FLEXURAL MEMBER - LOAD FACTOR RATING

DATE 3/11/99

D/P STRUCTURE I.D. = 770-075
MEMBER I.D. -- G 1
C.P. LOCATION -- 1.25

***** RATING FACTOR *****

		-- RATING FACTOR FOR -- MOMENT				-- RATING FACTOR FOR -- SHEAR			
		TOP		BOTT					
		+BEND	-BEND	+BEND	-BEND	LEFT	RIGHT	RATING VALUE	SAFE LOAD CAP.(TONS)
INV.	HS20	1.818	.000	1.818	.000	1.317	1.332	HS 26.3	47.4
OPER	HS20	3.031	.000	3.031	.000	2.132	2.156	HS 42.6	76.7
OPER 2	ST5	3.518	.000	3.518	.000	2.452	2.481	.0	98.1
POST 1	SU2	5.751	.000	5.751	.000	3.899	3.944		66.3
POST 4	SU3	3.088	.000	3.088	.000	2.170	2.195		71.6
POST 2	SU4	2.937	.000	2.937	.000	2.069	2.093		72.4
POST 5	C3	4.433	.000	4.433	.000	3.049	3.084		85.4
POST 3	C4	3.238	.000	3.238	.000	2.269	2.295		83.2
POST 6	C5	2.996	.000	2.996	.000	2.109	2.133		84.3

LIVE LOAD DATA AT MOMENT CHECK POINT FOR
COMPOSITE PRESTRESSED CONCRETE FLEXURAL MEMBER - LOAD FACTOR RATING

DATE 3/11/99

D/P STRUCTURE I.D. = 770-075
MEMBER I.D. -- G 1
C.P. LOCATION -- 1.50

***** LIVE LOAD CALCULATIONS (IMPACT FACTOR = .260 FOR +BEND AND = .260 FOR -BEND)

-- LIVE LOAD --

LIVE LOAD			TRUCK MOMENT REDIS LL+I FT-KIPS	TRUCK MOMENT LL+IMP FT-KIPS	TRUCK MOMENT LL FT-KIPS	TRUCK MOMENT LOC.NO. 1 WHEEL FT.	DIR	LANE MOMENT LL+IMP FT-KIPS	LANE MOMENT LL FT-KIPS	LANE MOMENT LOC.CONC. LOAD #1 FT.	LANE MOMENT LOC.CONC. LOAD #2 FT.	FIXED SHEAR +V KIPS	FIXED SHEAR -V KIPS	SHEAR LEFT KIPS	SHEAR RIGHT KIPS
INV.	HS20	+BEND	.00	1176.7	933.6	19.519	L	839.6	666.2	33.519	.000	.00	.00	34.02	34.02
		-BEND	.00	.0	.0	.000	L	.0	.0	.000	.000	.00	.00		
OPER	HS20	+BEND	.00	1176.7	933.6	19.519	L	839.6	666.2	33.519	.000	.00	.00	34.02	34.02
		-BEND	.00	.0	.0	.000	L	.0	.0	.000	.000	.00	.00		
OPER 2	ST5	+BEND	.00	979.2	776.9	2.519		.0	.0	.000	.000	.00	.00	27.31	27.31
		-BEND	.00	.0	.0	.000		.0	.0	.000	.000	.00	.00		
POST 1	SU2	+BEND	.00	624.5	495.5	20.519	L					.00	.00	19.22	19.22
		-BEND	.00	.0	.0	.000	L					.00	.00		
POST 4	SU3	+BEND	.00	1192.7	946.3	22.519						.00	.00	34.91	34.91
		-BEND	.00	.0	.0	.000						.00	.00		
POST 2	SU4	+BEND	.00	1273.1	1010.1	20.186	L					.00	.00	36.52	36.52
		-BEND	.00	.0	.0	.000	L					.00	.00		
POST 5	C3	+BEND	.00	836.2	663.5	23.519						.00	.00	21.04	21.04
		-BEND	.00	.0	.0	.000						.00	.00		
POST 3	C4	+BEND	.00	1049.2	832.5	1.686	L					.00	.00	30.26	30.26
		-BEND	.00	.0	.0	.000	L					.00	.00		
POST 6	C5	+BEND	.00	1137.5	902.5	1.686						.00	.00	32.46	32.46
		-BEND	.00	.0	.0	.000						.00	.00		

LIVE LOAD DATA AT MOMENT CHECK POINT FOR
COMPOSITE PRESTRESSED CONCRETE FLEXURAL MEMBER - LOAD FACTOR RATING

DATE 3/11/99

D/P STRUCTURE I.D. = 770-075
MEMBER I.D. -- G 1
C.P. LOCATION -- 1.50

***** RATING FACTOR *****

		-- RATING FACTOR FOR -- MOMENT TOP +BEND	TOP -BEND	BOTT +BEND	BOTT -BEND	-- RATING FACTOR FOR -- SHEAR LEFT	SHEAR RIGHT	RATING VALUE	SAFE LOAD CAP.(TONS)	
INV.	HS20	1.271	.000	1.271	.000	1.432	1.432	HS 25.4	45.8	
OPER	HS20	2.119	.000	2.119	.000	2.387	2.387	HS 42.4	76.3	601 1.25
OPER 2	ST5	2.547	.000	2.547	.000	2.974	2.974	.0	~~101.9~~	98.1 2.452 V
POST 1	SU2	3.993	.000	3.993	.000	4.226	4.226		~~67.9~~	66.3 3.899 V
POST 4	SU3	2.091	.000	2.091	.000	2.326	2.326		69.0	
POST 2	SU4	1.959	.000	1.959	.000	2.224	2.224		68.6	
POST 5	C3	2.982	.000	2.982	.000	3.859	3.859		83.5	
POST 3	C4	2.377	.000	2.377	.000	2.684	2.684		~~87.1~~	83.2 2.269 V
POST 6	C5	2.192	.000	2.192	.000	2.502	2.502		~~87.7~~	84.3 2.109 V

502

L = 20.4 DF = 2.015

LIVE LOAD DATA AT MOMENT CHECK POINT FOR
COMPOSITE PRESTRESSED CONCRETE FLEXURAL MEMBER - LOAD FACTOR RATING

DATE 3/11/99

D/P STRUCTURE I.D. = 770-075
MEMBER I.D. -- G 1
C.P. LOCATION -- 2.00

***** LIVE LOAD CALCULATIONS (IMPACT FACTOR = .260 FOR +BEND AND = .260 FOR -BEND)

-- LIVE LOAD -- PAGE 1

LIVE LOAD			TRUCK MOMENT REDIS LL+I FT-KIPS	TRUCK MOMENT LL+IMP FT-KIPS	TRUCK MOMENT LL FT-KIPS	TRUCK MOMENT LOC.NO. 1 WHEEL FT.	DIR	LANE MOMENT LL+IMP FT-KIPS	LANE MOMENT LL FT-KIPS	LANE MOMENT LOC.CONC. LOAD #1 FT.	LANE MOMENT LOC.CONC. LOAD #2 FT.	FIXED SHEAR +V KIPS	FIXED SHEAR -V KIPS	SHEAR LEFT KIPS	SHEAR RIGHT KIPS
INV.	HS20	+BEND	.00	.0	.0	.000	L	.0	.0	.000	.000	.00	.00	78.70	81.17
		-BEND	.00	.0	.0	.000	L	.0	.0	.000	.000	.00	.00		
OPER	HS20	+BEND	.00	.0	.0	.000	L	.0	.0	.000	.000	.00	.00	78.70	81.17
		-BEND	.00	.0	.0	.000	L	.0	.0	.000	.000	.00	.00		
OPER 2	ST5	+BEND	.00	.0	.0	2.519		.0	.0	.000	.000	.00	.00	-70.06	-72.26
		-BEND	.00	.0	.0	.000		.0	.0	.000	.000	.00	.00		
POST 1	SU2	+BEND	.00	.0	.0	.000	L					.00	.00	40.22	41.48
		-BEND	.00	.0	.0	.000	L					.00	.00		
POST 4	SU3	+BEND	.00	.0	.0	22.519						.00	.00	-75.75	-78.13
		-BEND	.00	.0	.0	.000						.00	.00		
POST 2	SU4	+BEND	.00	.0	.0	.000	L					.00	.00	79.85	82.36
		-BEND	.00	.0	.0	.000	L					.00	.00		
POST 5	C3	+BEND	.00	.0	.0	23.519						.00	.00	-55.96	-57.72
		-BEND	.00	.0	.0	.000						.00	.00		
POST 3	C4	+BEND	.00	.0	.0	.000	L					.00	.00	75.53	77.90
		-BEND	.00	.0	.0	.000	L					.00	.00		
POST 6	C5	+BEND	.00	.0	.0	1.686						.00	.00	-81.89	-84.46
		-BEND	.00	.0	.0	.000						.00	.00		

LIVE LOAD DATA AT MOMENT CHECK POINT FOR
COMPOSITE PRESTRESSED CONCRETE FLEXURAL MEMBER - LOAD FACTOR RATING

DATE 3/11/99

D/P STRUCTURE I.D. = 770-075
MEMBER I.D. -- G 1
C.P. LOCATION -- 2.00

***** RATING FACTOR *****

		-- RATING FACTOR FOR -- MOMENT				-- RATING FACTOR FOR -- SHEAR		RATING	SAFE
		TOP		BOTT		LEFT	RIGHT	VALUE	LOAD CAP.(TONS)
		+BEND	-BEND	+BEND	-BEND				
INV.	HS20	999.000	.000	999.000	.000	2.525	999.000	HS 50.5	90.9
OPER	HS20	999.000	.000	999.000	.000	4.208	999.000	HS 84.2	151.5
OPER 2	ST5	.000	.000	.000	.000	4.727	999.000	.0	189.1
POST 1	SU2	999.000	.000	999.000	.000	8.234	999.000		140.0
POST 4	SU3	.000	.000	.000	.000	4.372	999.000		144.3
POST 2	SU4	999.000	.000	999.000	.000	4.147	999.000		145.2
POST 5	C3	.000	.000	.000	.000	5.918	999.000		165.7
POST 3	C4	999.000	.000	999.000	.000	4.385	999.000		160.7
POST 6	C5	.000	.000	.000	.000	4.044	999.000		161.8

BRIDGE ANALYSIS AND RATING SYSTEM
INPUT DATA FORM CONTROL CARDS

DATA UPDATING AND ANALYSIS INITIATION	
CARD TYPE AA DD 99	SEE LEGEND OF CARD TYPES FOR COLUMN HEADERS

1	2	3	4	5	6	7	8	9	10	11	12	13	14	15	16	17	18	19	20	21

MAITLAND BOULEVARD OVER LITTLE WEHIVA RIVER

BRIDGE No. 770075 (FED FUNDS)

77000-3503 SR 414

PRESTRESSED

LEGEND

CARD TYPE AA

CARD TYPE	BLANK FIELD	NEW OR UPDATE	DELETE	ADDITION	SELECT	PERM FILE OLD NEW	LIST BTP
	b b b b b b		x b	x b	x b	b	b
1 2	3 4 5 6 7 8	9 10 11 12 13 14	15	16	17	18 19 20	21
A A		NEW		1	X		

CARD TYPE DD

CARD TYPE	STRUCTURE GROUP ID	STRUCTURE NO.	SEQUENCE NUMBER	DELETE	BLANK FIELD
				x b	b b b b b b
1 2	3 4 5	6 7 8	9 10 11 12 13 14	15	16 17 18 19 20 21
D D					

CARD TYPE 99

CARD TYPE	STRUCTURE GROUP ID	STRUCTURE NO.	STRUCTURE GROUP ID	STRUCTURE NO.	BLANK FIELD
					b b b b b b b
1 2	3 4 5	6 7 8	9 10 11	12 13 14	15 16 17 18 19 20 21
9 9	7 7 0	0 7 5			

PRESTRESSED

BRIDGE ANALYSIS AND RATING SYSTEM
INPUT DATA FORM CARD TYPE 01

BATCH SPECIFICATIONS

CARD TYPE		DATE (D M Y)	RATING ANALYST IDENTIFICATION	RATING TYPE EXCEPTIONS (I O P)	INV. LOAD NAME	OPERATING LOAD NAME	OPERATING ALLOWABLE STRESS RATIO f/f (INV.)	POSTING VEH. 1 LOAD NAME	POSTING VEH. 2 LOAD NAME	POSTING VEH. 3 LOAD NAME	POSTING ALLOWABLE STRESS RATIO f/f (INV.)	SPEC. ALLOWABLE STRESS RATIO f/f (INV.)	BATCH PROCESS CONTROL		POST RATING		TIMINGS	TABLES
							x.xxx				x.xxx	x.xxx	*XXX*					
01		17 06 98	YYS	A A									*LFS		POST			

1 2 3 4 5 6 7 8 9 10 11 12 13 14 15 16 17 18 19 20 21 22 23 24 25 26 27 28 29 30 31 32 33 34 35 36 37 38 39 40 41 42 43 44 45 46 47 48 49 50 51 52 53 54 55 56 57 58 59 60 61 62 63 64 65 66 67 68 69 70 71 72 73 74 75 76 77 78 79 80

BRIDGE ANALYSIS AND RATING SYSTEM
INPUT DATA FORM CARD TYPES 02, 05 AND 06

STRUCTURE HEADER AND DESCRIPTION

CARD TYPE (1-2)	STRUCTURE GROUP ID (3-5)	STRUCTURE NO. (6-8)	RATING ANALYST IDENTIFICATION (9-24)	ENGR. ATTN. (25)	OVERRULE BATCH RAT. EXCEPT'S (26-28)	OVERRULE FILE REQUESTS & OUTPUT DATA EXCEPTIONS (29-40)	STRUCTURE TYPE (41-46)	YEAR OF CONSTRUCTION (47-48)	STRUCTURE LENGTH Ft (49-54)	STRUCTURE LENGTH In (55-56)	STRUCTURE LENGTH 1/16 (57-58)	ROADWAY WIDTH Ft (59-64)	ROADWAY WIDTH In (65-66)	ROADWAY WIDTH 1/16 (67-68)	NUMBER OF SPANS (69-70)	NEGATE SPEC b (71)	LIVE LOAD TRUCK DESIGNATION INV. (72-74)	LIVE LOAD TRUCK DESIGNATION OPER. (75-78)
02	770	075					CPS	98	68	10	05	106	5	0	01			

STRUCTURE LOCATION AND PERMANENT IDENTIFICATION FACTORS

CARD TYPE (1-2)	STRUCTURE GROUP ID (3-5)	STRUCTURE NO. (6-8)	BRIDGE NUMBER (9-16)	DISTRICT (17)	COUNTY (18-20)	CONSTRUCTION ROUTE (21-28)	CONSTRUCTION SECTION (29-36)	CONSTRUCTION STATION (37-44)	MICROFILM REEL NUMBER DESIGN PLANS (45-50)	MICROFILM REEL NUMBER COMPUTATIONS (51-58)	MICROFILM REEL NUMBER CORRESPONDENCE (59-65)	KEY ROUTE ID (66-73)	MARKED ROUTE (74-80)
05	770	075		5	117	SR 414	77002	557490	DRMP				

COMMENTS

CARD TYPE (1-2)	STRUCTURE GROUP ID (3-5)	STRUCTURE NO. (6-8)	SEQ (9)	ANALYST REMARKS TO BE DUPLICATED IN FORM AND CONTENT ON SUMMARY OF RATING CALCULATIONS (10-80)
06	770	075	1	MAITLAND BLVD OVER LITLE WEKIVA RIVER
06	770	075	2	601 = B3 AASHTO TYPE 4 26-1/2" DIA. 270 KSI LOW LAX f'c = 5000PSI - HS20
06			3	
06			4	
06			5	
06			6	

BRIDGE ANALYSIS AND RATING SYSTEM
INPUT DATA FORM CARD TYPE 07

SPECIFICATIONS GENERALLY APPLICABLE TO MEMBERS OF A STRUCTURE

CARD TYPE	STRUCTURE GROUP ID	STRUCTURE NO.	MATERIAL STRENGTH: STRUCT. STEEL Fy lbs / sq. in.	REINFORCED CONCRETE Fy lbs / sq. in.	REINFORCED CONCRETE f'c lbs / sq. in.	COMPOSITE STEEL AND CONCRETE Fy lbs / sq. in.	COMPOSITE STEEL AND CONCRETE f'c lbs / sq. in.	PRESTRESSED CONCRETE LOSS kips / sq. in.	PRESTRESSED CONCRETE E_g/E_s *	PRESTRESSED CONCRETE f's kips / sq. in.	PRESTRESSED CONCRETE f"c lbs / sq. in.	MAXIMUM IMPACT FACTOR XX% INV	MAXIMUM IMPACT FACTOR XX% OP	MAXIMUM IMPACT FACTOR XX% POST	MAXIMUM IMPACT FACTOR XX% SPEC	MINIMUM IMPACT FACTOR XX% INV	MINIMUM IMPACT FACTOR XX% OP	MINIMUM IMPACT FACTOR XX% POST	MINIMUM IMPACT FACTOR XX% SPEC	MATERIAL STRENGTH TIMBER	MATERIAL STRENGTH TIMBER f_b lbs / sq. in.
			i	i	i	i	i	x x x . x	x x . x x	i	i	i	i	i	i	i	i	i	i		i
07	770	075		6	04500			45.00	1.105	270	05500										
07																					
07																					
07																					
07																					
07																					
07																					
07																					
07																					
07																					
07																					
07																					
07																					
07																					
07																					
07																					
07																					
07																					
07																					

* E_{girder}

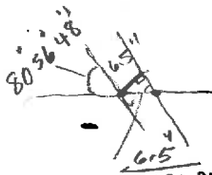

= 6.5819"

BRIDGE ANALYSIS AND RATING SYSTEM
INPUT DATA FORM CARD TYPE 08

Col $L = 68.1354 - 2\left(\frac{6.5819}{18}\right) = 67.0384'$ (0.5485)

MEMBER DESCRIPTION SPECIFICATIONS – GIRDER, STRINGER, FLOOR BEAM

CARD TYPE	STRUCTURE GROUP ID	STRUCTURE NO.	MEMBER ID SIDE	MEMBER ID NO.	CONTINUE	TOTAL NO. OF SPANS	CANTIL. FLR. BM.	ANALYSIS CNTRL.	SYMMETRICAL	SPAN LENGTHS SPAN 1 4 7 10 13 16 F	Feet	In	1/16	SPAN 2 5 8 11 14 17 F	Feet	In	1/16	SPAN 3 6 9 12 15 18 F	Feet	In	1/16	CROSS RC CSC PSC CPS TMB	ALLOWABLE STRESS F_y psi	f'_s ksi	f_{bs} lbs/sq. in.	f'_c	f'_c	LIVE LOAD DISTRIB. FACTOR "E" or "S" in Feet	END FLOOR BEAM	THROUGH T B	MAXIMUM IMPACT FACTOR XXX INV	OP	POST	SPEC	STIFFENER CODE	END FIXITY L	R
08	770	0.75	6.0.1		0.1				X		67.0384											CPS						2.0.1.5									
08																																					
08																																					
08																																					
08																																					
08																																					
08																																					
08																																					
08																																					
08																																					
08																																					
08																																					
08																																					
08																																					
08																																					
08																																					
08																																					
08																																					
08																																					
08																																					
08																																					
08																																					
08																																					
08																																					
08																																					

$\frac{11.083}{5.5} = 2.015$

BRIDGE ANALYSIS AND RATING SYSTEM
INPUT DATA FORM CARD TYPE 09

RATING POSITION SPECIFICATIONS

CARD TYPE	STRUCTURE GROUP ID	STRUCTURE NO.	MEMBER ID GSB	MEMBER ID NO.	RATING POSITION LOCATION SPP	DISTANCE FROM LEFT SUPPORT F	Feet	In	1/16	MVB	MOM. IN FT-KIPS SHEAR IN KIPS SECTION CAPACITY	CAPACITY REDUCT. DUE TO DL	RATING POSITION LOCATION SPP	DISTANCE FROM LEFT SUPPORT F	Feet	In	1/16	MVB	MOM. IN FT-KIPS SHEAR IN KIPS SECTION CAPACITY	CAPACITY REDUCT. DUE TO DL
1 2 3 4 5	6 7 8	9 10 11	12 13	14 15	16 17 18	19 20 21	22 23 24	25	26 27 28 29 30 31 32 33 34	35	36 37 38 39 40 41 42 43 44 45 46 47 48	49 50	51 52 53 54 55 56 57 58 59 60							
0.9	77	007	56	01		X	16	7	5 9 6	B										
0.9																				
0.9																				
0.9																				
0.9																				
0.9																				
0.9																				
0.9																				
0.9																				
0.9																				
0.9																				
0.9																				
0.9																				
0.9																				
0.9																				
0.9																				
0.9																				
0.9																				
0.9																				
0.9																				

BRIDGE ANALYSIS AND RATING SYSTEM
INPUT DATA FORM CARD TYPE 10

See Calc BR# 770074

SUPERIMPOSED DEAD LOADS - GIRDERS, STRINGERS, FLOOR BEAMS

CARD TYPE	STRUCTURE GROUP ID	STRUCTURE NO.	MEMBER ID (G, S, B)	SYMMETRICAL (x, b)	SPAN NO.	DISTANCE FROM LEFT SUPPORT IN SPAN (F, I, Feet, in, 1/16)	LOAD TYPE (P, W, V)	DISTRIBUTED OR CONCENTRATED LOAD "P" in KIPS "W" in LBS/FT (P or W_L x x x x y)	(W_R x x x x y)	LENGTH (DISTRIBUTED) (F, I, Feet, in, 1/16)
1 2	3 4 5	6 7 8	9 10 11	12	13 14	15 16 17 18 19 20 21 22 23 24 25 26 27 28 29 30 31	32	33 34 35 36 37 38	39 40 41 42 43	44 45 46 47 48 49 50 51 52 53
10	770	075	G01		01			W302.6		X 6703 84
10										
10										
10										
10										
10										
10										
10										
10										
10										
10										
10										
10										
10										
10										
10										
10										
10										
10										
10										
10										

Beam → 11.083' SPACING

FROM BR# 770074
LITILITY PIPE 653/11 = 243.2
59.4
302.6

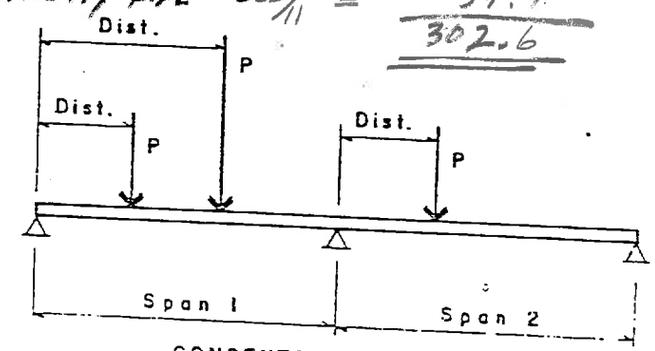

CONCENTRATED LOADS

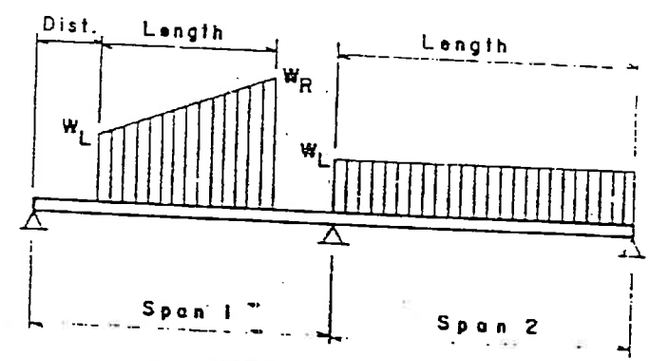

DISTRIBUTED LOADS

BRIDGE ANALYSIS AND RATING SYSTEM
INPUT DATA FORM CARD TYPE 11

SECTION RANGE SPECIFICATIONS

CARD TYPE	STRUCTURE GROUP ID	STRUCTURE NO.	MEMBER ID (GI SI BI)	SYMMETRICAL (x b)	SPAN NO.	SECTION RANGE: RANGE NO.	RANGE LENGTH (F I) Feet	RANGE LENGTH In 1/16	SEC NO. Lt.	SEC NO. Rt.	SEC VAR (S P T b)	SEC VAR (T B b)	CODE (1 2 b)	HINGE LOCATION: FIRST HINGE DISTANCE FROM LEFT (F I) Feet	FIRST HINGE In 1/16	SECOND HINGE DISTANCE FROM LEFT (F I) Feet	SECOND HINGE In 1/16	HYBRID GIRDER: YIELD STRENGTH BASE SECTION (A b)	BASE SECTION F_v (psi) i	EXCEPTION (T W B b)	EXCEPTION F_v (psi) i
1 1	7700	75	601		01	01	X	6710	38	401											

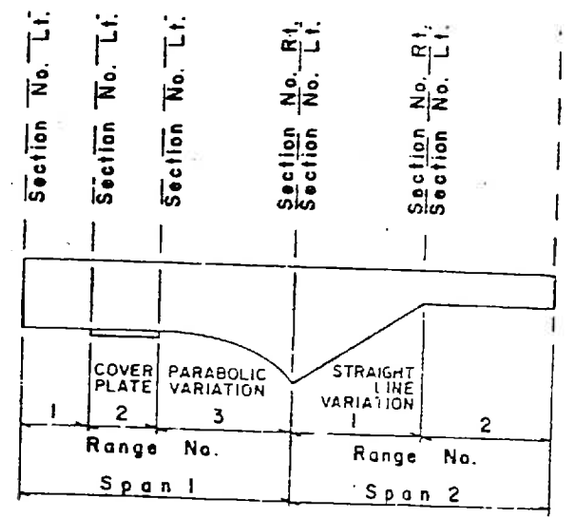

SECTION RANGE

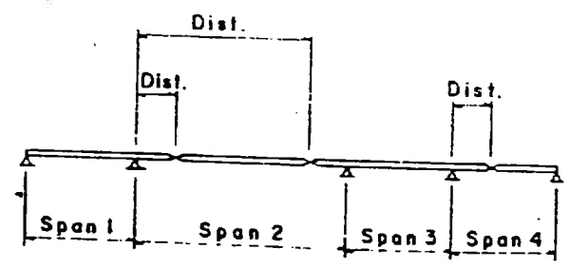

INTERMEDIATE HINGES

STAY IN PLACE FORM $20 \times \left(11'.083 - \frac{20''}{12}\right) = 188.32$

$$y = \frac{188.32(144)}{8(150)} = 22.6''$$

BRIDGE ANALYSIS AND RATING SYSTEM
INPUT DATA FORM CARD TYPE 14

$1\frac{11}{16}''$ $3/16''$ 1.6875" .1875 1.8750 0.9375

SECTION PROPERTIES (COMPOSITE REINFORCED CONCRETE SLAB WITH STEEL OR PRESTRESSED CONCRETE) — GIRDERS, STRINGERS

CARD TYPE (1–2)	STRUCTURE GROUP ID (3–5)	STRUCTURE NO. (6–8)	MEMBER ID G S B NO. (9–11)	SYMMETRICAL x b (12)	SPAN NO. (13–14)	RANGE NO. (15–16)	RANGE LENGTH F (17)	Feet (18–22)	In (23–24)	1/16 (25–26)	COMPOSITE CODE (27)	COMPOSITE SECTION DESCRIPTION: VALUE OF "n" (28–29)	SECTION NO. (30–31)	"SAME EXCEPT" A R (32–34)	CONCRETE SLAB: WIDTH in. (35–39)	THICK in. (40–43)	FILLET WIDTH in. (44–47)	FILLET THICK in. (48–51)	EFFECT. WIDTH in. (52–56)	EFFECT. THICK in. (57–60)	DIST. TO TOP OF BEAM SEC in. (61–65)	NEGATIVE MOMENT REINF.: $(A_s)_c$ in.^{2} (66–70)	$(d_s)_c$ in. (71–74)	F_y psi (75–79)
1 4	7 7 0	0 7 5	6 0 1		0 1	0 1	X	6 7 0 3 8 4			C		0 1		1 5 5 . 6	0 8 . 0	2 0 . 0	0 . 9 4	9 6 . 0 0	0 8 . 0	4 . 9 4 0			
1 4																								
1 4																								
1 4																								
1 4																								
1 4																								
1 4																								
1 4																								
1 4																								
1 4																								
1 4																								
1 4																								
1 4																								
1 4																								
1 4																								
1 4																								
1 4																								
1 4																								
1 4																								

133 + 22.6 = 155.6

BRIDGE ANALYSIS AND RATING SYSTEM
INPUT DATA FORM CARD TYPE 15

SECTION PROPERTIES (PRESTRESSED CONCRETE) - GIRDERS, STRINGERS

CARD TYPE	STRUCTURE GROUP ID	STRUCTURE NO.	MEMBER ID GIRDER SIDE NO.	SECTION NO.	"SAME EXCEPT" AIDRS	SECTION DESCRIPTION: VOID DESCRIPTION: DIAM. OR DEPTH in. H_v	VOID DESCRIPTION: WIDTH in. W_v	VOID DESCRIPTION: CEN. TO BOT. OF BEAM DIST. in. d_v	CONCRETE SHAPE DESCRIPTION: BEAM DEPTH in. H	TOP FLGE. WID. in. W_T	TOP FLGE. THK. in. t_T	TOP FILLET THICK in. g_T	WEB THK. in. W	BOT. FILLET THICK in. g_B	BOT. FLGE. THK. in. t_B	BOT. FLGE. WID. in. W_B	PRESTRESSING STRANDS: i	BTAK INNbb	A_s^i in.^{2}	E b	d^i in.
1,5	7700	0,75	6,01	01					54,00	20,00	0,80	0,60	0,80	0,90	0,80	26,00	01	L	1,08		03,00
1,5																	02	L	1,08		05,00
1,5																	03	L	3,08		07,00
1,5	7700	0,75	6,01	01					54,00	20,00	0,80	0,60	0,80	0,90	0,80	26,00	04	L	1,08		09,00
1,5																					
1,5																					
1,5																					
1,5																					
1,5																					
1,5																					
1,5																					
1,5																					
1,5																					
1,5																					
1,5																					
1,5																					
1,5																					
1,5																					

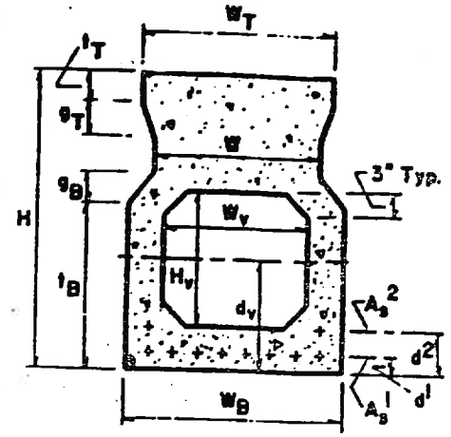

PSC BOX GIRDER WITH VOID OR DECK SLAB BEAM WITH VOID

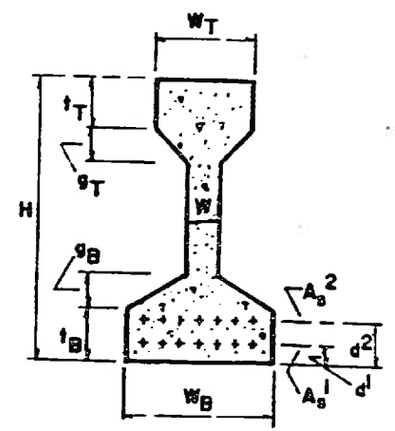

PSC I-BEAM

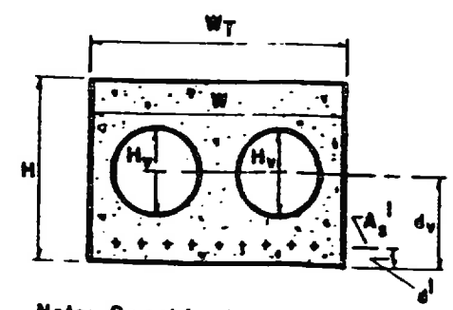

Note: Do not input t_T, g_T, g_B, t_B, or W_B

PSC RECTANGULAR BOX BEAM WITH CIRCULAR VOID

BRIDGE ANALYSIS AND RATING SYSTEM
INPUT DATA FORM CARD TYPE 17

L = 67.0384
66.8196
2 | 0.2188
0.1094

8.5" = 0.7083
0.5485
0.1598

S3 — 10'
S2 — 6.75'
S1 15.50
1.50
0.2083
67.9166
0.8594
68.7759

68.1354

SPECIFICATIONS FOR SHEAR REINFORCENT - RC, PSC, CPS, CRC MEMBERS

CARD TYPE (1–2)	STRUCTURE GROUP ID (3–5)	STRUCTURE NO. (6–8)	MEMBER ID GIRDER NO. (9–11)	SYMMETRICAL (12)	SPAN NO. (13–14)	SHEAR REINF (15)	SECTION RANGE RANGE NO. (16–17)	RANGE LENGTH Fill (18)	Feet (19–23)	In (24–26)	1/16 (27)	GROUP (32)	i (33–34)	A_s^i in.² B/b (35)	b N N D D (36–40)	ANGLE OF REINFORCEMENT α (41–42)	NO. OF SPACING (43–44)	SPACING (LENGTH) Fill (45)	Feet (46–49)	In (50–52)	1/16 (53–54)	(55)
17	770	075	601		01	S	01	X		01	598		01	B	204		01	X		01	598	
17							2			075	00		01	B	204		03	X		02	500	
17							3			312	500		01	B	104		13	X		02	500	
17							4			12	500				104		25	X		05	00	
17							5			6	7500						09	X		07	500	
17							6			10	0						10	X		10	0	
17							7			02	188						02	X		01	094	
17							8			10	0						10			10	0	
17							9			6	7500						09			07	500	
17							10			12	500						05			05	00	
17							11			3	2500				104		13			02	500	
17							12			07	500				204		03			02	500	
17	770	075	601		01	S	13	X		01	598		01	B	204		01	X		01	598	
17																						
17																						
17																						
17																						
17																						
17																						
17																						

0.8594

FLORIDA DEPARTMENT OF TRANSPORTATION
BRIDGE MANAGEMENT SYSTEM
Inspection/CIDR Report
Inspection

Structure ID: 770083

DISTRICT: D5 - Deland **INSPECTION DATE: 9/24/2018 EUOK**

BY:	FDOT District 5	STRUCTURE NAME:	SR-414 over SR-434
OWNER:	1 State Highway Agency	YEAR BUILT:	2000
MAINTAINED BY:	1 State Highway Agency	SECTION NO.:	77 002 000
STRUCTURE TYPE:	3 Steel - 02 Stringer/Girder	MP:	38.359
LOCATION:	SR-414 over SR-434	ROUTE:	00414
SERV. TYPE ON:	1 Highway	FACILITY CARRIED:	SR-414
SERV. TYPE UNDER:	1 Highway	FEATURE INTERSECTED:	SR-434

☐ FUNCTIONALLY OBSOLETE ☐ STRUCTURALLY DEFICIENT

TYPE OF INSPECTION: Regular NBI

DATE FIELD INSPECTION WAS PERFORMED: ABOVE WATER: 9/24/2018 UNDERWATER: N/A

SUFFICIENCY RATING: 100
HEALTH INDEX: 99.94

This report contains information relating to the physical security of a structure and depictions of the structure. This information is confidential and exempt from public inspection pursuant to sections 119.071(3)(a) and 119.071(3)(b), Florida Statutes. Only the cover page of this report may be inspected and copied.

FLORIDA DEPARTMENT OF TRANSPORTATION
BRIDGE MANAGEMENT SYSTEM
Inspection/CIDR Report
Inspection

Structure ID: 770083

DISTRICT: D5 - Deland **INSPECTION DATE: 9/24/2018 EUOK**

BY:	FDOT District 5	STRUCTURE NAME:	SR-414 over SR-434
OWNER:	1 State Highway Agency	YEAR BUILT:	2000
MAINTAINED BY:	1 State Highway Agency	SECTION NO.:	77 002 000
STRUCTURE TYPE:	3 Steel - 02 Stringer/Girder	MP:	38.359
LOCATION:	SR-414 over SR-434	ROUTE:	00414
SERV. TYPE ON:	1 Highway	FACILITY CARRIED:	SR-414
SERV. TYPE UNDER:	1 Highway	FEATURE INTERSECTED:	SR-434

☐ THIS BRIDGE CONTAINS FRACTURE CRITICAL COMPONENTS

☐ THIS BRIDGE IS SCOUR CRITICAL

☐ THIS REPORT IDENTIFIES DEFICIENCIES WHICH REQUIRE PROMPT CORRECTIVE ACTION

☐ FUNCTIONALLY OBSOLETE ☐ STRUCTURALLY DEFICIENT

TYPE OF INSPECTION: Regular NBI

DATE FIELD INSPECTION WAS PERFORMED: ABOVE WATER: 9/24/2018 UNDERWATER: N/A

OVERALL NBI RATINGS:

DECK:	7 Good	CHANNEL:	N N/A (NBI)
SUPERSTRUCTURE:	8 Very Good	CULVERT:	N N/A (NBI)
SUBSTRUCTURE:	8 Very Good	SUFF. RATING:	100
PERF. RATING:	Good	HEALTH INDEX:	99.94

FIELD PERSONNEL / TITLE / NUMBER:	**INITIALS**
Kneale, Ronald - Bridge Inspector (CBI#00388) (lead)	Ronald Kneale Digitally signed by: Ronald Kneale DN: CN = Ronald Kneale email = ronald.kneale@dot.state.fl.us C = AD Date: 2018.10.31 07:26:44 -05'00'
Loveless, Walter - Bridge Inspector (CBI #00355)	

REVIEWING BRIDGE INSPECTION SUPERVISOR:

McCartney, Sandusky - Bridge Inspection Supervisor (PE #83922) SM Digitally signed by: SM DN: CN = SM email = sandusky.mccartney@dot.state.fl.us C = US O = FDOT OU = Structures Maintenance Date: 2018.10.31 15:56:49 -04'00'

CONFIRMING REGISTERED PROFESSIONAL ENGINEER:

Kestory, Edmond - DSME (P.E.#60889) FDOT District 5
1650 North Kepler Road
Deland Operations
Deland FL 32724

SIGNATURE:

DATE:

THIS DOCUMENT HAS BEEN DIGITALLY SIGNED AND SEALED BY:

EDMOND JOSEPH KESTORY LICENSE No 60889 STATE OF FLORIDA PROFESSIONAL ENGINEER

ON THE DATE ADJACENT TO THE SEAL. PRINTED COPIES OF THIS DOCUMENT ARE NOT CONSIDERED SIGNED AND SEALED. THE SIGNATURE MUST BE VERIFIED ON ANY ELECTRONIC DOCUMENTS.

Digitally signed by: Edmond J Kestory Jr
DN: CN = Edmond J Kestory Jr C = US O = IdenTrust ACES Business Representative OU = FLORIDA DEPARTMENT OF TRANSPORTATION
Date: 2018.11.01 10:48:59 -04'00'

This report contains information relating to the physical security of a structure and depictions of the structure. This information is confidential and exempt from public inspection pursuant to sections 119.071(3)(a) and 119.071(3)(b), Florida Statutes. Only the cover page of this report may be inspected and copied.

FLORIDA DEPARTMENT OF TRANSPORTATION
BRIDGE MANAGEMENT SYSTEM
Inspection/CIDR Report
Inspection

Structure ID: 770083

DISTRICT: D5 - Deland **INSPECTION DATE: 9/24/2018 EUOK**

All Elements

DECKS : Decks/Slabs

Str Unit	Elem/Env	Description	Qty1	%1	Qty2	%2	Qty3	%3	Qty4	%4	T Qty
0	12 / 2	Re Concrete Deck	27553	94.77	1520	5.23	0	.	0	.	29073 sq.ft
0	1120 / 2	Efflorescence/Rust Staining	0	.	20	100	0	.	0	.	20 sq.ft
0	1130 / 2	Cracking (RC and Other)	0	.	1500	100	0	.	0	.	1500 sq.ft

Element Inspection Notes:

12/2 CS-2 - Deck Top - NO CHANGE
1130 - The deck top and raised median have lateral, longitudinal and map cracking randomly throughout. The cracks are up to 1/32in. wide and extend up to the full slab in length. (1500 sq. ft.) See photo #1.

Deck Underside - NO CHANGE
1120 - The deck overhangs on both sides of the bridge have lateral cracks with efflorescence randomly throughout. These cracks extend into both vertical faces of the deck and the barrier walls. The cracks are up to 1/32in. wide and extend up to full overhang and vertical face in length. (20 sq. ft.)

Note: The deck underside has steel stay-in-place forms in all bays. There is 1in. and 2in. electrical conduit extending from the deck underside for the traffic signals in bays 1-1, 1-5, and 1-9. There is under deck lighting attached to the deck underside in bays 1-3 and 1-7.

1120/2 Refer to Parent Element

1130/2 Refer to Parent Element

DECKS : Joints

Str Unit	Elem/Env	Description	Qty1	%1	Qty2	%2	Qty3	%3	Qty4	%4	T Qty
0	300 / 2	Strip Seal Exp Joint	116	50.43	114	49.57	0	.	0	.	230 ft
0	2320 / 2	Seal Adhesion	0	.	114	100	0	.	0	.	114 ft

Element Inspection Notes:

300/2 CS-2 - NO CHANGE
2320 - Both end bent expansion joint strip seals have been filled with a poured sealant. The sealant has lost its adhesion at random locations throughout. See photo #2. The condition state of the strip seal could not be determined due to the expansion joint being filled with a poured sealant. (114 ft.)

Note: The width of the expansion joints were measured during the previous inspection at a temperature of 75 degrees.
End Bent 1 – 2 1/2 in.
End Bent 2 – 2in.

2320/2 Refer to Parent Element

MISCELLANEOUS : Other Elements

Str Unit	Elem/Env	Description	Qty1	%1	Qty2	%2	Qty3	%3	Qty4	%4	T Qty
0	321 / 2	Re Conc Approach Slab	4471	98.05	49	1.07	40	0.88	0	.	4560 sq.ft
0	1080 / 2	Delamination/Spall/Patched Area	0	.	1	100	0	.	0	.	1 sq.ft
0	1130 / 2	Cracking (RC and Other)	0	.	0	.	40	100	0	.	40 sq.ft

This report contains information relating to the physical security of a structure and depictions of the structure. This information is confidential and exempt from public inspection pursuant to sections 119.071(3)(a) and 119.071(3)(b), Florida Statutes. Only the cover page of this report may be inspected and copied.

FLORIDA DEPARTMENT OF TRANSPORTATION
BRIDGE MANAGEMENT SYSTEM
Inspection/CIDR Report
Inspection

Structure ID: 770083

DISTRICT: D5 - Deland **INSPECTION DATE: 9/24/2018 EUOK**

0	4000 / 2	Settlement	0	.	48	100	0	.	0	.	48 sq.ft

Element Inspection Notes:

321/2 CS-3 - NO CHANGE
1130- Both approach slabs have longitudinal cracks randomly throughout. The cracks are up to 1/16in. wide and extend up to full approach slab in length. See photo #3. The raised bridge median on both approach slabs has lateral, longitudinal and diagonal cracks. The cracks are up to 1/16in. wide and up to full length and width of the approach slab median in length. (40 sq. ft.)

CS-2- NO CHANGE
1080 - There are spalls in the approach slab adjacent to the southeast approach barrier wall. The spalls are up to 12in. x 8in. x 1in. (1ft.)
4000- There is minor settlement of the approach roadway adjacent to both approach slabs. The settlement is up to 1/2in in depth. (48 ft.)

1080/2 Refer to Parent Element

1130/2 Refer to Parent Element

4000/2 Refer to Parent Element

MISCELLANEOUS : Other Elements

Str Unit	Elem/Env	Description	Qty1	%1	Qty2	%2	Qty3	%3	Qty4	%4	T Qty
0	8475 / 2	R/Conc Walls	79	100	0	.	0	.	0	.	79 ft

Element Inspection Notes:

8475/2 No Notes

MISCELLANEOUS : Other Elements

Str Unit	Elem/Env	Description	Qty1	%1	Qty2	%2	Qty3	%3	Qty4	%4	T Qty
0	8478 / 2	MSE Walls	306	98.08	0	.	6	1.92	0	.	312 ft
0	1080 / 2	Delamination/Spall/Patched Area	0	.	0	.	1	100	0	.	1 ft
0	1130 / 2	Cracking (RC and Other)	0	.	0	.	5	100	0	.	5 ft

Element Inspection Notes:

8478/2 CS-3 - NO CHANGE
1130 - The top MSE wall panel adjacent to the south end of the end bent 2 cap has diagonal and vertical cracks. The diagonal cracks are up to 1/8in. wide and 3ft. in length. The vertical cracks are up to 1/32in. wide and 1ft. in length. (5ft.) See photo #4.
1080 - There is a 1ft. x 1ft. x 2in. spall in the first MSE wall panel in the fourth row from the southeast corner of the bridge. (1ft.)

1080/2 Refer to Parent Element

1130/2 Refer to Parent Element

SUBSTRUCTURE : Substructure

Str Unit	Elem/Env	Description	Qty1	%1	Qty2	%2	Qty3	%3	Qty4	%4	T Qty
0	215 / 2	Re Conc Abutment	232	100	0	.	0	.	0	.	232 ft

Element Inspection Notes:

215/2 CS-1- NO CHANGE
Backwalls - There are vertical cracks in both end bent backwalls. The cracks are up to

This report contains information relating to the physical security of a structure and depictions of the structure. This information is confidential and exempt from public inspection pursuant to sections 119.071(3)(a) and 119.071(3)(b), Florida Statutes. Only the cover page of this report may be inspected and copied.

FLORIDA DEPARTMENT OF TRANSPORTATION
BRIDGE MANAGEMENT SYSTEM
Inspection/CIDR Report
Inspection

Structure ID: 770083

DISTRICT: D5 - Deland **INSPECTION DATE: 9/24/2018 EUOK**

1/32in. wide and extend up to full backwall height in length.

Note - NO CHANGE
Cheekwalls - There are insignificant lateral cracks in all four cheekwalls approximately 4ft. from the bottom. The cracks are up to 1/32in. wide and up to full width of the cheekwall in length and appear to be at the construction joint. (16ft.)
There are insignificant diagonal cracks in the top of all four cheekwalls. The diagonal cracks are up to 1/32in. wide and extend up to 16in. in length. (8ft.)

Note: There are electrical junction boxes attached to the top of end bent 1 cap in bays 1-1, 1-5, 1-9 and end bent 2 cap in bays 1-3 and 1-7.

SUPERSTRUCTURE : Bearings

Str Unit	Elem/Env	Description	Qty1	%1	Qty2	%2	Qty3	%3	Qty4	%4	T Qty
0	310 / 2	Elastomeric Bearing	20	100	0	.	0	.	0	.	20 each

Element Inspection Notes:

310/2 No Notes

SUPERSTRUCTURE : Superstructure

Str Unit	Elem/Env	Description	Qty1	%1	Qty2	%2	Qty3	%3	Qty4	%4	T Qty
0	107 / 2	Steel Opn Girder/Beam	46160	100	0	.	0	.	0	.	46160 ft
0	8516 / 2	Painted Steel	46160	100	0	.	0	.	0	.	46160 sq.ft

Element Inspection Notes:

107/2 Note: There are two signs and four traffic signals with 3in. electrical conduit attached to the outside face of the web of both exterior beams. There are junction boxes attached to the south face of the web for beam 1-1 and to the north face of the web for beam 1-10. There are two traffic signals with 3in. electrical conduit attached to the lower flange of beams 1-5 and 1-6.

8516/2 Refer to Parent Element

SUPERSTRUCTURE : Superstructure

Str Unit	Elem/Env	Description	Qty1	%1	Qty2	%2	Qty3	%3	Qty4	%4	T Qty
0	331 / 2	Re Conc Bridge Railing	456	93.25	30	6.13	3	0.61	0	.	489 ft
0	1080 / 2	Delamination/Spall/Patched Area	0	.	0	.	3	100	0	.	3 ft
0	1120 / 2	Efflorescence/Rust Staining	0	.	30	100	0	.	0	.	30 ft

Element Inspection Notes:

331/2 CS-3- NO CHANGE
1080/1090 - There is a spall on the northeast approach slab barrier wall adjacent to the end bent 2 expansion joint. The spall is 12in. x 8in. x 3in. The cracks are up to 1/32in. wide and up to 4ft. in length. See photo #5. There are in-place spalls and diagonal cracks in the southeast and northwest approach slab barrier wall adjacent to the end bent expansion joint. The in-place spalls are up to 16in. x 16in. and the cracks are up to 1/32in. wide and extend up to full approach barrier wall height in length. (3ft.)

CS-2 - NO CHANGE
1120 - Both barrier walls have vertical cracks with efflorescence randomly throughout. The cracks are up to 1/32in. wide and extend up to full barrier wall height in length. These cracks extend into the deck overhang on both sides of the bridge. (30 ft.) There is an in-place spall in the south barrier wall adjacent to the end bent 2 expansion joint. The in-place spall is approximately 3in. x 2in. (1ft.)

This report contains information relating to the physical security of a structure and depictions of the structure. This information is confidential and exempt from public inspection pursuant to sections 119.071(3)(a) and 119.071(3)(b), Florida Statutes. Only the cover page of this report may be inspected and copied.

FLORIDA DEPARTMENT OF TRANSPORTATION
BRIDGE MANAGEMENT SYSTEM
Inspection/CIDR Report
Inspection

Structure ID: 770083

DISTRICT: D5 - Deland **INSPECTION DATE: 9/24/2018 EUOK**

1080/2	Refer to Parent Element
1120/2	Refer to Parent Element

Total Number of Elements*: 9
*excluding defects/protective systems

Structure Notes

Bridge #770074 is to the west and bridge #750287 and #750290 are to the east of this bridge #770083.

On 10-11-18, W.Isidort found the load rating for #770083 applicable.

INSPECTION NOTES: EUOK 9/24/2018

Sufficiency Rating Calculation Accepted by MT538rk-P at 2018-9-24

This report contains information relating to the physical security of a structure and depictions of the structure. This information is confidential and exempt from public inspection pursuant to sections 119.071(3)(a) and 119.071(3)(b), Florida Statutes. Only the cover page of this report may be inspected and copied.

FLORIDA DEPARTMENT OF TRANSPORTATION
BRIDGE MANAGEMENT SYSTEM
Inspection/CIDR Report
Inspection

Structure ID: 770083

DISTRICT: D5 - Deland **INSPECTION DATE: 9/24/2018 EUOK**

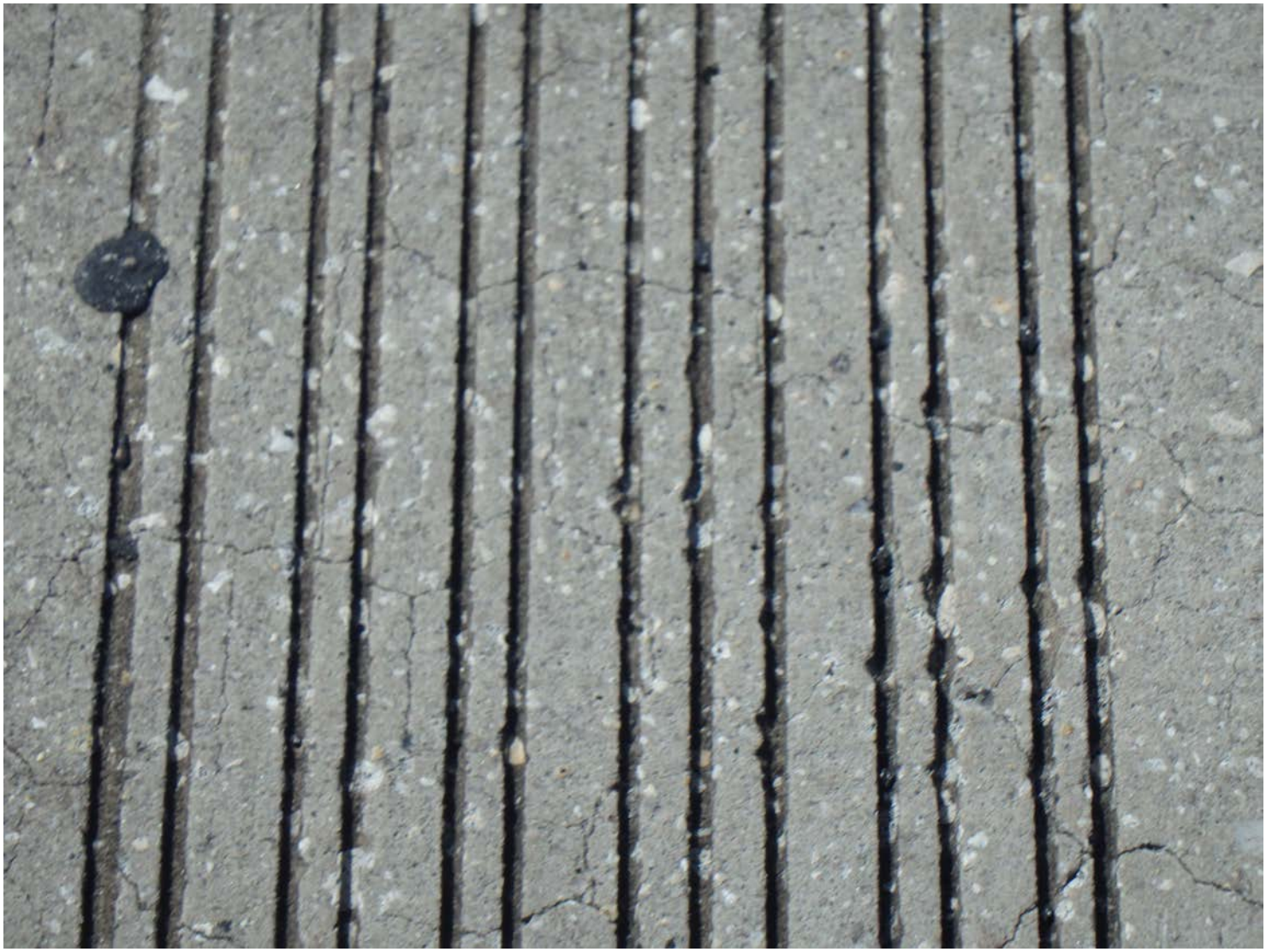

Photo #1 - Typical of cracking in the deck top.

WORK ORDER RECOMMENDATION:
NONE

This report contains information relating to the physical security of a structure and depictions of the structure. This information is confidential and exempt from public inspection pursuant to sections 119.071(3)(a) and 119.071(3)(b), Florida Statutes. Only the cover page of this report may be inspected and copied.

FLORIDA DEPARTMENT OF TRANSPORTATION
BRIDGE MANAGEMENT SYSTEM
Inspection/CIDR Report
Inspection

Structure ID: 770083

DISTRICT: D5 - Deland **INSPECTION DATE: 9/24/2018 EUOK**

Photo #2 - Typical of deteriorated joint sealant.

WORK ORDER RECOMMENDATION:
NONE

This report contains information relating to the physical security of a structure and depictions of the structure. This information is confidential and exempt from public inspection pursuant to sections 119.071(3)(a) and 119.071(3)(b), Florida Statutes. Only the cover page of this report may be inspected and copied.

FLORIDA DEPARTMENT OF TRANSPORTATION
BRIDGE MANAGEMENT SYSTEM
Inspection/CIDR Report
Inspection

Structure ID: 770083

DISTRICT: D5 - Deland **INSPECTION DATE: 9/24/2018 EUOK**

Photo #3 - Typical of cracking in the approach slab.

WORK ORDER RECOMMENDATION:
NONE

This report contains information relating to the physical security of a structure and depictions of the structure. This information is confidential and exempt from public inspection pursuant to sections 119.071(3)(a) and 119.071(3)(b), Florida Statutes. Only the cover page of this report may be inspected and copied.

FLORIDA DEPARTMENT OF TRANSPORTATION
BRIDGE MANAGEMENT SYSTEM
Inspection/CIDR Report
Inspection

Structure ID: 770083

DISTRICT: D5 - Deland **INSPECTION DATE: 9/24/2018 EUOK**

Photo #4 - View of cracking at south end of the MSE wall adjacent to the cap.

WORK ORDER RECOMMENDATION:
NONE

This report contains information relating to the physical security of a structure and depictions of the structure. This information is confidential and exempt from public inspection pursuant to sections 119.071(3)(a) and 119.071(3)(b), Florida Statutes. Only the cover page of this report may be inspected and copied.

FLORIDA DEPARTMENT OF TRANSPORTATION
BRIDGE MANAGEMENT SYSTEM
Inspection/CIDR Report
Inspection

Structure ID: 770083

DISTRICT: D5 - Deland **INSPECTION DATE: 9/24/2018 EUOK**

Photo #5 - Typical of spall and cracking in the north barrier wall.

WORK ORDER RECOMMENDATION:
NONE

This report contains information relating to the physical security of a structure and depictions of the structure. This information is confidential and exempt from public inspection pursuant to sections 119.071(3)(a) and 119.071(3)(b), Florida Statutes. Only the cover page of this report may be inspected and copied.

FLORIDA DEPARTMENT OF TRANSPORTATION
BRIDGE MANAGEMENT SYSTEM

REPORT ID: INSP005

Inspection/CIDR Report

Structure ID: 770083

CIDR

DATE PRINTED: 10/31/2018

Description

Structure Unit Identification

Bridge/Unit Key: 770083 0
Structure Name: SR-414 over SR-434
Description: MAIN SPAN 1
Type: M - Main

Roadway Identification

NBI Structure No (8): 770083
Position/Prefix (5): 1 - Route On Structure
Kind Hwy (Rte Prefix): 3 State Hwy
Design Level of Service: 1 Mainline
Route Number/Suffix: 00414 / 0 N/A (NBI)
Feature Intersect (6): SR-434
Critical Facility: Not Defense-crit
Facility Carried (7): SR-414
Mile Point (11): 38.359
Latitude (16): 029d05'95.5" Long (17): 081d09'12.8"

Roadway Traffic and Accidents

Lanes (28): 4 Medians: 1 Speed: 55 mph
ADT Class: 4 ADT Class 4
Recent ADT (29): 48500 Year (30): 2017
Future ADT (114): 84148 Year (115): 2039
Truck % ADT (109): 6
Detour Length (19): 0 mi
Detour Speed: 55 mph
Accident Count: -1 Rate: -1

Roadway Classification

Nat. Hwy Sys (104): 0 Not on NHS
National base Net (12): 0 - Not on Base Network
LRS Inventory Rte (13a): 77 002 000 Sub Rte (13b): 00
Functional Class (26): 16 Urban Minor Arterial
On Federal Aid System: Yes
Defense Hwy (100): 0 Not a STRAHNET hwy
Direction of Traffic (102): 2 2-way traffic
Emergency: [X]

Roadway Clearances

Vertical (10): 99.99 ft Appr. Road (32): 95.4 ft
Horiz. (47): 114.47 ft Roadway (51): 95.4 ft
Truck Network (110): 0 Not part of natl netwo
Toll Facility (20): 3 On free road
Fed. Lands Hwy (105): 0 N/A (NBI)
School Bus Route: [ ]
Transit Route: [ ]

NBI Project Data

Proposed Work (075A): Not Applicable (P)
Work To Be Done By (075B): Not Applicable (P)
Improvement Length (076): 0 ft

Improvement Cost (094): $ 0.00
Roadway Improvement Cost (095): $ 0.00
Total Cost (096): $ 0.00
Year of Estimate (097):

NBI Rating

Channel (61): N N/A (NBI)
Deck (58): 7 Good
Superstructure (59): 8 Very Good
Substructure (60): 8 Very Good

Culvert (62): N N/A (NBI)
Waterway (71): N Not applicable
Unrepaired Spalls: -1 sq.ft.
Review Required: [X]

This report contains information relating to the physical security of a structure and depictions of the structure. This information is confidential and exempt from public inspection pursuant to sections 119.071(3)(a) and 119.071(3)(b), Florida Statutes. Only the cover page of this report may be inspected and copied.

FLORIDA DEPARTMENT OF TRANSPORTATION
BRIDGE MANAGEMENT SYSTEM

REPORT ID: INSP005

Inspection/CIDR Report

Structure ID: 770083

CIDR

DATE PRINTED: 10/31/2018

Structure Identification

Admin Area: METROPLAN Orlando
District (2): D5 - Deland
County (3): (77)Seminole
Place Code (4): Altamonte Springs
Location (9): SR-414 over SR-434
Border Br St/Reg (98): Not Applicable (P) Share: 0 %
Border Struct No (99):
FIPS State/Region (1): 12 Florida Region 4-Atlanta
NBIS Bridge Len (112): Y - Meets NBI Length

Parallel Structure (101): No || bridge exists
Temp. Structure (103): Not Applicable (P)
Maint. Resp. (21): 1 State Highway Agency
Owner (22): 1 State Highway Agency
Historic Signif. (37): 5 Not eligible for NRHP

Geometrics

Spans in Main Unit (45): 1
Approach Spans (46): 0
Length of Max Span (48): 244.75 ft
Structure Length (49): 246.8 ft
Total Length: 284.8 ft
Deck Area: 29073.03 sqft
Structure Flared (35): 0 No flare

Age and Service

Year Built (27): 2000
Year Reconstructed (106): 0
Type of Service On (42a): 1 Highway
Under (42b): 1 Highway
Fracture Critical Details: Not Applicable

Structure Type and Material

Curb/Sidewalk (50): Left: 0 ft Right: 0 ft
Bridge Median (33): 2 Closed Med w/o Barrier
Main Span Material (43A): 3 Steel
Appr Span Material (44A): Not Applicable
Main Span Design (43B): 02 Stringer/Girder
Appr Span Design (44B): Not Applicable

Deck Type and Material

Deck Width (52): 117.8 ft
Skew (34): 0 deg
Deck Type (107): 1 Concrete-Cast-in-Place
Surface (108): 1 Monolithic Concrete
Membrane: 0 None
Deck Protection: None

Appraisal

Structure Appraisal

Open/Posted/Closed (41): A Open, no restriction
Deck Geometry (68): 9 Above Desirable Crit
Underclearances (69): 7 Above Minimum
Approach Alignment (72): 8-No Speed Red thru Curv
Bridge Railings (36a): 1 Meets Standards
Transitions (36b): 1 Meets Standards

Approach Guardrail (36c): 1 Meets Standards
Approach Guardrail Ends (36d): 1 Meets Standards
Scour Critical (113): N Not Over Waterway

Navigation Data

Navigation Control (38): NA-no waterway
Nav Vertical Clr (39): 0 ft
Nav Horizontal Clr (40): 0 ft
Min Vert Lift Clr (116): 0 ft
Pier Protection (111): Not Applicable (P)

NBI Condition Rating

Sufficiency Rating: 100
Health Index: 99.94
Structural Eval (67): 8 Equal Desirable Crit
Deficiency: Not Deficient

Minimum Vertical Clearance

Over Structure (53): 99.99 ft
Under (reference) (54a): H Hwy beneath struct
Under (54b): 16.4 ft

Minimum Lateral Underclearance

Reference (55a): H Hwy beneath struct
Right Side (55b): 69.9 ft
Left Side (56): 70 ft

Schedule

Current Inspection

Inspection Date: 09/24/2018
Inspector: MT538RK - Ronald Kneale
Bridge Group:
Alt. Bridge Group:
Primary Type: Regular NBI
Review Required: [X]

Next Inspection Date Scheduled

NBI: 09/24/2020
Element: 09/24/2020
Fracture Critical:
Underwater:
Other/Special:

This report contains information relating to the physical security of a structure and depictions of the structure. This information is confidential and exempt from public inspection pursuant to sections 119.071(3)(a) and 119.071(3)(b), Florida Statutes. Only the cover page of this report may be inspected and copied.

FLORIDA DEPARTMENT OF TRANSPORTATION
BRIDGE MANAGEMENT SYSTEM

REPORT ID: INSP005

Inspection/CIDR Report

Structure ID: 770083

CIDR

DATE PRINTED: 10/31/2018

Schedule Cont.

Inspection Types Performed NBI [X] Element [X] Fracture Critical [ ] Underwater [ ] Other Special [ ]

Inspection Intervals	Required (92)	Frequency (92)		Last Date (93)		Inspection Resources	
Fracture Critical	[ ]	mos				Crew Hours:	10
Underwater	[ ]	mos				Flagger Hours:	0
Other Special	[ ]	mos				Helper Hours:	0
NBI		24 mos	(91)	09/24/2018	(90)	Snooper Hours:	0
						Special Crew Hours:	0
						Special Equip Hours:	0

Bridge Related

General Bridge Information

Parallel Bridge Seq:
Channel Depth: 0 ft
Radio Frequency: -1
Phone Number: (000) 000-0001
Exception Date:
Exception Type: Unknown
Accepted By Maint: 08/09/2000
Warranty Expiration: 00/00/0000
Performance Rating: Good

Bridge Rail 1: Concrete jersey type
Bridge Rail 2: Not applicable-No rail
Electrical Devices: Combination values 1-7
Culvert Type: Not applicable
Maintenance Yard: 593-Oviedo Sub-Yard
FIHS ON / OFF: No Routes on FIHS
Previous Structure:
2nd Previous Structure:
Replacement Structure:

Permitted Utilities: Power [ ] Water [ ] Gas [ ] Fiber Optic [ ] Sewage [ ] Other [ ]

Bridge Load Rating Information

Inventory Type (065): 1 LF Load Factor
Operating Type (063): 1 LF Load Factor
Original Design Load (031): 5 MS 18 (HS 20)
Date: 05/07/1998
Initials: mse
Load Rating Rev. Recom.:
Load Rating Plans Status: Design or Construction

Inventory Rating (066): 62.9 tons
Operating Rating (064): 99.0 tons
FL120 Permit Rating: -1.0 tons
HS20/FL120 Max Span Rating: 104.9 tons
Dynamic Impact in Percent: 14 %
Governing Span Length: 242.1 ft
Minimum Span Length:
Distribution Method: AASHTO formula

Load Rating Notes:

LEGAL LOADS

SU2: 99.0 tons
SU3: 99.0 tons
SU4: 99.0 tons
C3: 99.0 tons
C4: 99.0 tons
C5: 99.0 tons
ST5: 99.0 tons
Posting (070): 5 At/Above Legal Loads
Open/Posted/Closed (041): A Open, no restriction

POSTING

Recom. SU Posting: 99 tons
Recom. C Posting: 99 tons
Recom. ST5 Posting: 99 tons
Actual SU Posting: 99 tons
Actual C Posting: 99 tons
Actual ST5 Posting: 99 tons
Actual Blanket Posting: 99 tons

FLOOR BEAM (FB) FB Present: No

FB Span Length, Gov:
FB Spacing, Gov:
FB OPR Rating: 0.0 tons
FB SU4 OPR Rating:
FB FL120 Rating:

SEGMENTAL (SEG)

SEG Wing-Span: -1.0 ft
SEG Web-to-Web Span: -1.0 ft
SEG FL120 Transverse: -1.0 tons
SEG Single Axle Transverse: -1.0 tons
SEG Tandem Axle Transverse -1.0 tons

Bridge Scour and Storm Information

Pile Driving Record: All pile driving records
Foundation Type: Foundation details
Mode of Flow: Not Applicable
Rating Scour Eval: Not Applicable
Highest Scour Eval: Not Applicable
Scour Evaluation Method:

Scour Recommended I: Not Applicable
Scour Recommended II: Not Applicable
Scour Recommended III: Not Applicable
Scour Elevation: -1 ft
Action Elevation: -1 ft
Storm Frequency: -1

This report contains information relating to the physical security of a structure and depictions of the structure. This information is confidential and exempt from public inspection pursuant to sections 119.071(3)(a) and 119.071(3)(b), Florida Statutes. Only the cover page of this report may be inspected and copied.

FLORIDA DEPARTMENT OF TRANSPORTATION
BRIDGE MANAGEMENT SYSTEM

REPORT ID: INSP005 | **Inspection/CIDR Report**

Structure ID: 770083 | **CIDR** | **DATE PRINTED: 10/31/2018**

Elements

Inspection Date: 09/24/2018 **EUOK**

DECKS : Decks/Slabs

Str Unit	Elem/Env	Description	Qty1	%1	Qty2	%2	Qty3	%3	Qty4	%4	T Qty
0	12 / 2	Re Concrete Deck	27553	94.77	1520	5.23	0	.	0	.	29073 sq.ft
0	1120 / 2	Efflorescence/Rust Staining	0	.	20	100	0	.	0	.	20 sq.ft
0	1130 / 2	Cracking (RC and Other)	0	.	1500	100	0	.	0	.	1500 sq.ft

DECKS : Joints

Str Unit	Elem/Env	Description	Qty1	%1	Qty2	%2	Qty3	%3	Qty4	%4	T Qty
0	300 / 2	Strip Seal Exp Joint	116	50.43	114	49.57	0	.	0	.	230 ft
0	2320 / 2	Seal Adhesion	0	.	114	100	0	.	0	.	114 ft

MISCELLANEOUS : Other Elements

Str Unit	Elem/Env	Description	Qty1	%1	Qty2	%2	Qty3	%3	Qty4	%4	T Qty
0	321 / 2	Re Conc Approach Slab	4471	98.05	49	1.07	40	0.88	0	.	4560 sq.ft
0	1080 / 2	Delamination/Spall/Patched Area	0	.	1	100	0	.	0	.	1 sq.ft
0	1130 / 2	Cracking (RC and Other)	0	.	0	.	40	100	0	.	40 sq.ft
0	4000 / 2	Settlement	0	.	48	100	0	.	0	.	48 sq.ft

MISCELLANEOUS : Other Elements

Str Unit	Elem/Env	Description	Qty1	%1	Qty2	%2	Qty3	%3	Qty4	%4	T Qty
0	8475 / 2	R/Conc Walls	79	100	0	.	0	.	0	.	79 ft

MISCELLANEOUS : Other Elements

Str Unit	Elem/Env	Description	Qty1	%1	Qty2	%2	Qty3	%3	Qty4	%4	T Qty
0	8478 / 2	MSE Walls	306	98.08	0	.	6	1.92	0	.	312 ft
0	1080 / 2	Delamination/Spall/Patched Area	0	.	0	.	1	100	0	.	1 ft
0	1130 / 2	Cracking (RC and Other)	0	.	0	.	5	100	0	.	5 ft

SUBSTRUCTURE : Substructure

Str Unit	Elem/Env	Description	Qty1	%1	Qty2	%2	Qty3	%3	Qty4	%4	T Qty
0	215 / 2	Re Conc Abutment	232	100	0	.	0	.	0	.	232 ft

SUPERSTRUCTURE : Bearings

Str Unit	Elem/Env	Description	Qty1	%1	Qty2	%2	Qty3	%3	Qty4	%4	T Qty
0	310 / 2	Elastomeric Bearing	20	100	0	.	0	.	0	.	20 each

SUPERSTRUCTURE : Superstructure

Str Unit	Elem/Env	Description	Qty1	%1	Qty2	%2	Qty3	%3	Qty4	%4	T Qty
0	107 / 2	Steel Opn Girder/Beam	46160	100	0	.	0	.	0	.	46160 ft
0	8516 / 2	Painted Steel	46160	100	0	.	0	.	0	.	46160 sq.ft

SUPERSTRUCTURE : Superstructure

Str Unit	Elem/Env	Description	Qty1	%1	Qty2	%2	Qty3	%3	Qty4	%4	T Qty
0	331 / 2	Re Conc Bridge Railing	456	93.25	30	6.13	3	0.61	0	.	489 ft
0	1080 / 2	Delamination/Spall/Patched Area	0	.	0	.	3	100	0	.	3 ft
0	1120 / 2	Efflorescence/Rust Staining	0	.	30	100	0	.	0	.	30 ft

Total Number of Elements*: 9
*excluding defects/protective systems

This report contains information relating to the physical security of a structure and depictions of the structure. This information is confidential and exempt from public inspection pursuant to sections 119.071(3)(a) and 119.071(3)(b), Florida Statutes. Only the cover page of this report may be inspected and copied.

FLORIDA DEPARTMENT OF TRANSPORTATION
BRIDGE MANAGEMENT SYSTEM

REPORT ID: INSP005

Inspection/CIDR Report

Structure ID: 770083

CIDR

DATE PRINTED: 10/31/2018

Inspection Information

Inspection Date: 09/24/2018 **Type:** Regular NBI

Inspector: MT538RK - Ronald Kneale

Inspection Notes: Sufficiency Rating Calculation Accepted by MT538rk-P at 2018-9-24

Structure Notes

Bridge #770074 is to the west and bridge #750287 and #750290 are to the east of this bridge #770083.

On 10-11-18, W.Isidort found the load rating for #770083 applicable.

Schedule Notes

This report contains information relating to the physical security of a structure and depictions of the structure. This information is confidential and exempt from public inspection pursuant to sections 119.071(3)(a) and 119.071(3)(b), Florida Statutes. Only the cover page of this report may be inspected and copied.

FLORIDA DEPARTMENT OF TRANSPORTATION
BRIDGE MANAGEMENT SYSTEM

REPORT ID: INSP005

Inspection/CIDR Report

Structure ID: 770083

CIDR

DATE PRINTED: 10/31/2018

Under Route Information

Roadway Identification

NBI Structure No (8): 770083
Position/Prefix (5): A - 1st Route Under
Kind Hwy (Rte Prefix): 3 State Hwy
Design Level of Service: 1 Mainline
Route Number/Suffix: 00434 / 0 N/A (NBI)
District (2): D5 - Deland
County (3): (77)Seminole
Place Code (4): Altamonte Springs
Feature Intersect (6): SR-434
Facility Carried by Structure (7): SR-414
Critical Facility: Not Defense-crit
Roadway Name: SR-434
Mile Point (11): 0.027
Latitude (16): 029d05'95.5" Long (17): 081d09'12.8"

Roadway Traffic and Accidents

Lanes (28): 6 Medians: 0 Speed: 45 mph
ADT Class: 4 ADT Class 4
Recent ADT (29): 51000 Year (30): 2017
Future ADT (114): 88485 Year (115): 2039
Truck % ADT (109): 6
Detour Length (19): 1.0 mi
Detour Speed: 45 mph
Accident Count: -1 Rate:

Roadway Classification

Nat. Hwy Sys (104): 1 On the NHS
National base Net (12): 0 - Not on Base Network
LRS Inventory Rte (13a): 77 120 001 Sub Rte (13b):
Functional Class (26): 14 Urban Other Princ
On Federal Aid System: Yes
Defense Hwy (100): 0 Not a STRAHNET hwy
Direction of Traffic (102): 2 2-way traffic
Emergency: [X]

Roadway Clearances

Vertical (10): 16.8 ft Appr. Road (32): 99 ft
Horiz. (47): 99.9 ft Roadway (51): 130 ft
Truck Network (110): 1 Part of natl network
Toll Facility (20): 3 On free road
Fed. Lands Hwy (105): 0 N/A (NBI)
School Bus Route: [ ]
Transit Route: [ ]

This report contains information relating to the physical security of a structure and depictions of the structure. This information is confidential and exempt from public inspection pursuant to sections 119.071(3)(a) and 119.071(3)(b), Florida Statutes. Only the cover page of this report may be inspected and copied.

STATE OF FLORIDA DEPARTMENT OF TRANSPORTATION

METRIC LOAD CAPACITY INFORMATION METRIC

FORM 850-010-06
MAINTENANCE - 09/95

1. **BRIDGE DATA:**
Bridge Number 770083 Date 6/23/00
STR Type Main [BID Item B1(43)] 302 STR Type APR [BID Item B2(44)] 000

2. **POSTING DATA:**
Posted NO If yes, Existing Restrictions ____ BID Item H8(41) ____
Posting Needed NO If Yes, Proposed Restrictions ____ BID Item H11(70) 5 BID Item H7(31) 5

3. **ANALYSIS DATA:**

A. Method of Analysis:
- X Load Factor
- ___ Working Stress

B. Analysis System:
- X BARS
- ___ SALOD
- ___ BRUFEM
- ___ Load Test
- X Other HAND CALC'S.

C. Analysis Based On:
- X Design Drawings
- ___ As-Built Record Plans
- ___ Shop Drawings
- ___ Field Measurement
- ___ Catalogs
- ___ Sample Testing
- ___ Other ____

D. Data Stored:
- ___ District Office
- ___ Central Office
- ___ Microfilm
- ___ Bridge Owner
- ___ Materials Test Lab
- X Other S&F

E. Controlling Member Analyzed:

Material:
- 1 Steel
- ___ Concrete
  - ___ Cast in Place
  - ___ Precast
  - ___ Prestressed
  - ___ Post Tensioned
- ___ Timber
- ___ Other ____

Function:
- ___ Slab
- ___ Stringer
- ___ Floor Beam
- 1 Girder
- ___ Culvert
- ___ Truss

Substructure:
- ___ Bent Construction
  - ___ Piling
  - ___ Cap
- ___ Pier Construction
  - ___ Piling
  - ___ Footing
  - ___ Column
  - ___ Cap

Span:
- 1 Simple
- ___ Continuous
- ___ Frame

Slab:
- ___ Non-Composite
- 1 Composite

Shape:
- ___ Rolled
- 1 Built-up Welded
- ___ Built-up Riveted
- ___ Box Shape
- ___ AASHTO Girders
- ___ Other ____

Impact Factor: 14 %

B.I.D. Item H2B 1
B.I.D. Item H9A 1
B.I.D. Item H10A 1

4. **Load Rating Summary Table:**

LOAD RATING SUMMARY FOR OPERATING RATING
(GROSS TONS)

VEHICLE TYPE Metric Tons (U.S. Tons)	METRIC RATING	U.S. RATING	RATING FACTOR	SPAN NO.	SPAN LENGTH	CONTR. MEMBER	M OR V	LLDF
SU2 - 15.4(17.0)	129	142	8.387	1	73.8	1	M	2.182
SU3 - 29.9 (33.0)	130	144	4.366	1	73.8	1	M	2.182
SU4 - 31.8 (35.0)	131	144	4.126	1	73.8	1	M	2.182
C3 - 25.4 (28.0)	136	150	5.387	1	73.8	1	M	2.182
C4 - 33.2 (36.6)	135	149	4.076	1	73.8	1	M	2.182
C5 - 36.3 (40.0)	135	149	3.742	1	73.8	1	M	2.182
ST5 - 36.3 (40.0)	143	157	3.944	1	73.8	1	M	2.182
HS20 - 32.7 (36.0)	95.2	104.8	2.912	1	73.8	1	M	2.182
HS20 - Inventory Rating	57.1	62.8	1.747					

t = Metric Ton = 1,000 kg T = U.S. Ton = 2,000 pounds Mass

5. **Comments:**

6. **Computations:**
Performed By URS GREINER Date 1/22/98
Checked By ____ Date ____
Reviewed By ____ Date ____

7. Responsible Engineer: M.S.E
P.E. # 36078 Date 5/7/98

BRIDGE DATA:
Bridge Number 770083
STR Type Main [BID Item B1(43)] 3020010

Date May 6, 1998
STR Type APR [BID Item B2(44)] 0000000

POSTING DATA:
Posted NO If yes, Existing
Restrictions
BID Item H8(41) G

Posting Needed NO If Yes, Proposed
Restrictions
BID Item H11(70) 5
BID Item H7(31) 5

ANALYSIS DATA:

A. Method of Analysis:
- X Load Factor
- ___ Working Stress

B. Analysis System:
- X BARS
- ___ SALOD
- ___ BRUFEM
- ___ Load Test
- X Other See Comments Below

C. Analysis Based On:
- X Design Drawings
- ___ As-Built Record Plans
- ___ Shop Drawings
- ___ Field Measurement
- ___ Catalogs
- ___ Sample Testing
- ___ Other

D. Data Stored:
- X District Office
- ___ Central Office
- ___ Microfilm
- ___ Bridge Owner
- ___ Materials Test Lab
- ___ Other

E. Controlling Member Analyzed:

Material:
- / Steel
- ___ Concrete
  - ___ Cast In Place
  - ___ Precast
  - ___ Prestressed
  - ___ Post Tensioned
- ___ Timber
- ___ Other

Function:
- ___ Slab
- ___ Stringer
- ___ Floor Beam
- / Girder
- ___ Culvert
- ___ Truss

Substructure:
- ___ Bent Construction
  - ___ Piling
  - ___ Cap
- ___ Pier Construction
  - ___ Piling
  - ___ Footing
  - ___ Column
- ___ Cap

Span:
- / Simple
- ___ Continuous
- ___ Frame

Slab:
- ___ Non-Composite
- / Composite

Shape:
- ___ Rolled
- / Built-up Welded
- ___ Built-up Riveted
- ___ Box Shape
- ___ AASHTO Girders
- ___ Other

Impact Factor: 0.136

B.I.D. Item H2B 1
B.I.D. Item H9A 1
B.I.D. Item H10A 1

4. Load Rating Summary Table:

LOAD RATING SUMMARY FOR OPERATING RATING (GROSS TONS)

VEHICLE TYPE Metric Tons (U.S. Tons)	METRIC RATING	U.S. RATING	RATING FACTOR	SPAN NO.	SPAN LENGTH	CONTR. MEMBER	M OR V	LLDF
SU2 - 15.4(17.0)		142.6	8.387	1	242	1	M	2.182
SU3 - 29.9 (33.0)		144.1	4.366	1	242	1	M	2.182
~~SU4 - 31.8 (35.0)~~		~~144.4~~	~~4.126~~	~~1~~	~~242~~	~~1~~	~~M~~	~~2.182~~
C3 - 25.4 (28.0)		150.8	5.387	1	242	1	M	2.182
C4 - 33.2 (36.6)		149.4	4.076	1	242	1	M	2.182
C5 - 36.3 (~~40.0~~ (36.6)		137.0	3.742	1	242	1	M	2.182
ST5 - 36.3 (40.0)		157.8	3.944	1	242	1	M	2.182
HS20 - 32.7 (36.0)		104.8	2.912	1	242	1	M	2.182
HS20 - Inventory Rating		62.9	1.747					

t = Metric Ton = 1,000 kg T = U.S. Ton = 2,000 pounds Mass

5. Comments:
BARS Program could not calculate Moment Capacity for a Composite Compact Section. Therefore BARS output was corrected using Moment Capacity from Consultant's Design Program

6. Computations:
Performed By A. Safko Date May 6, 1998
Checked By T. Menke Date May 7, 1998
Reviewed By M. Ercholtz Date May 7, 1998

7. Responsible Engineer:
P.E. # 36078 Mark S. Ercholtz Date May 7, 1998

BRIDGE NO. 770083

S.R 414 (MAITLAND BLVD.) INTERCHANGE
AT
S.R. 434 (FOREST CITY RD.)

SPN: 77002-3505
WPI NO.: 5117764
SEMINOLE COUNTY

4.3 LOAD RATINGS	Pages
Bridge and Girder Layout	1 - 5
BARS Input	6 - 15
BARS Output	
TITLE. LIS	16
LISTA. LIS	17
RATE2. LIS	18 - 22
SUMARY. LIS	23
ERRSUM. LIS	24 - 40
REPORT . LIS	41
NUFLEX. LIS	42 - 57
NVTRK. LIS	58 - 67
Load Capacity Information Sheet	68

770083

IN USE

Mark S. Eichelberger
5/8/98

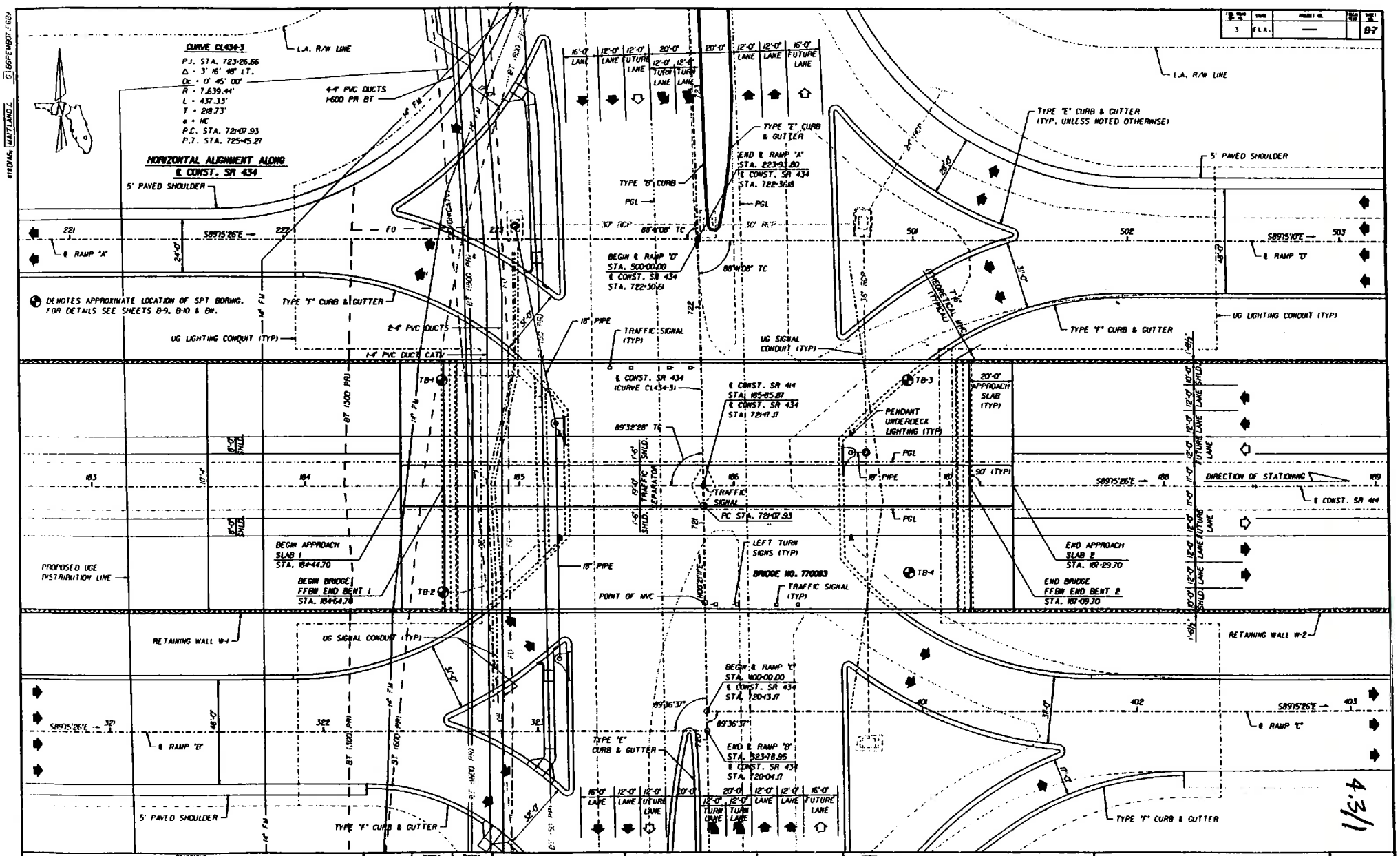

REVISIONS					
Date	By	Description	Date	By	Description

	Name	Date
Drawn by	JLS	8/97
Checked by	MH	8/97
Designed by	MH	8/97
Checked by	MSE	8/97
Approved by	MARK S. EICHOLTZ	

ENGINEER OF RECORD
URS Greiner, Inc.
P.O. BOX 2446, 748 WEST
COURTNEY CAMPBELL CAUSEWAY
TAMPA, FLORIDA 33601-2446

LOGO: URS Greiner

SEAL: Mark S. Eicholtz 3/2/98

FLORIDA DEPARTMENT OF TRANSPORTATION
STRUCTURES DESIGN OFFICE

ROAD NO.	COUNTY	PROJECT NO.
SR 414	SEMINOLE	77002-3505

SHEET TITLE: PLAN - BRIDGE NO. 770083

PROJECT NAME: S.R. 414 OVER S.R. 434

Drawing No.

Index No.

FED. ROAD DIV. NO.	STATE	PROJECT NO.	REF. STD.	SHEET NO.
3	FLA.	—		B-8

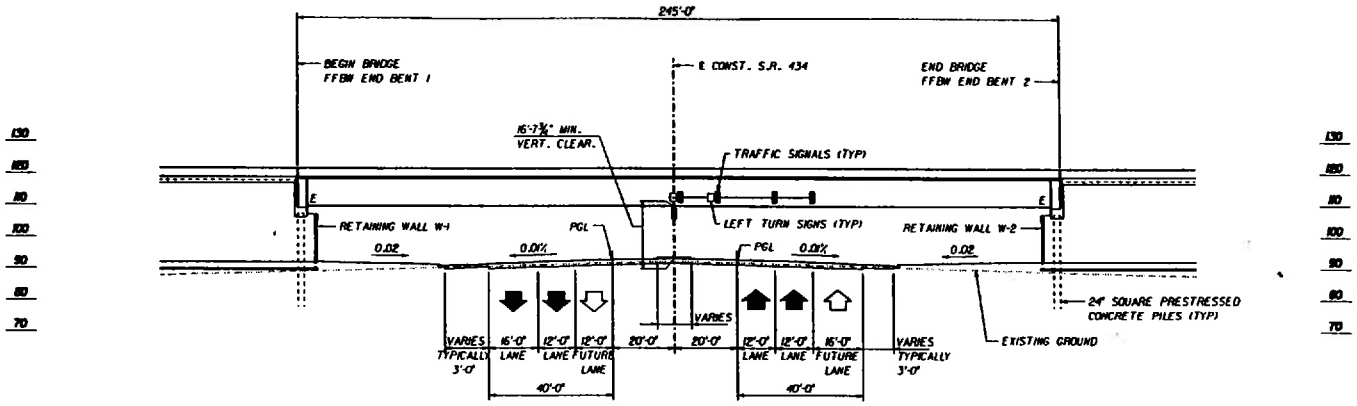

ELEVATION

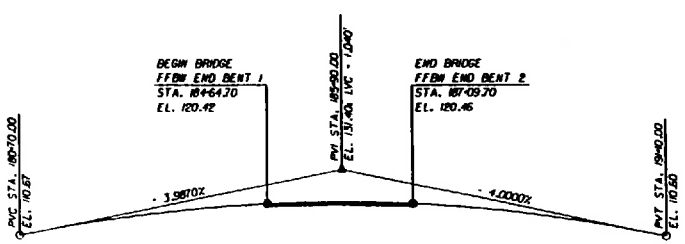

VERTICAL ALIGNMENT ALONG P.G.L. SR 414

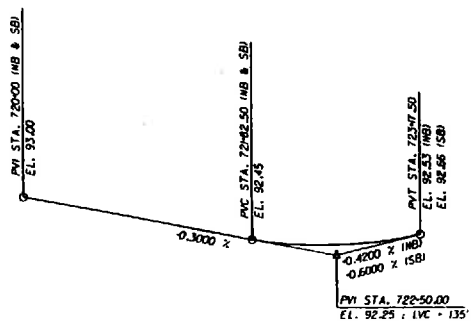

VERTICAL ALIGNMENT ALONG P.G.L. SR 434

TRAFFIC DATA				
ROADWAY	ADT YEAR 2002	ADT YEAR 2022	DESIGN SPEED	% TRUCKS
S.R.414 (MAITLAND BLVD.)	50,600	68,700	45 MPH	3.0
S.R. 434 (FOREST CITY RD.)	54,100	73,400	45 MPH	3.0
K = 8.9%			D = 55.1%	

4.3/2

REVISIONS					
Date	By	Description	Date	By	Description

	Names	Dates
Drawn by	KAC	8/97
Checked by	MH	8/97
Designed by	MH	8/97
Checked by	WSE	8/97
Approved by	MARK S. EICHOLTZ	

ENGINEER OF RECORD:
URS Greiner, Inc.
P.O. BOX [illegible], 7[illegible] WEST
COURTNEY CAMPBELL CAUSEWAY
TAMPA, FLORIDA [illegible]

LOGO: URS Greiner

SEAL: Mark S. Eicholtz 3/2/98

FLORIDA DEPARTMENT OF TRANSPORTATION
STRUCTURES DESIGN OFFICE

ROAD NO.	COUNTY	PROJECT NO.
SR 414	SEMINOLE	77002-3505

SHEET TITLE: ELEVATION - BRIDGE NO. 770083

PROJECT NAME: S.R. 414 OVER S.R. 434

Drawing No.

Index No.

#MDIAG MAITLAND C. 3 BCPEW808.FGB1

FED. ROAD DIV. NO.	STATE	PROJECT NO.	SHEET NO.
3	FLA.	—	B-17

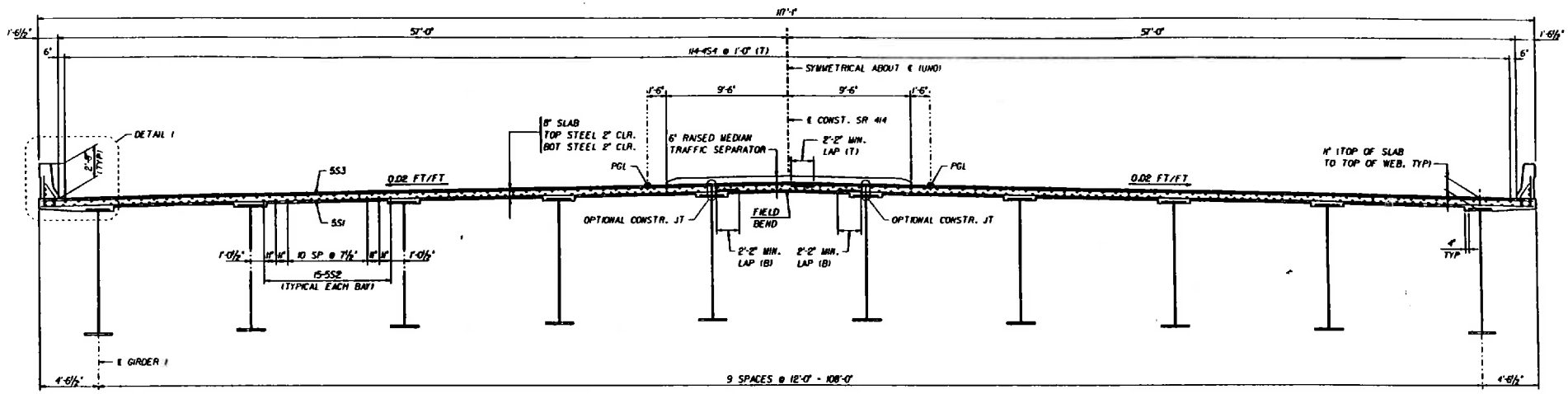

TYPICAL SECTION

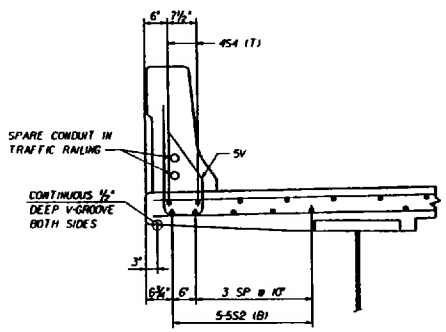

DETAIL I

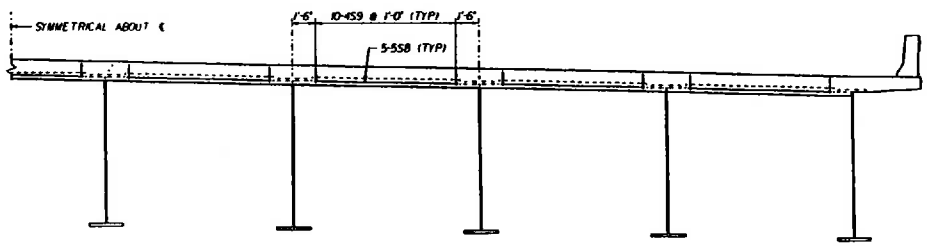

HALF SECTION AT END OF SPAN

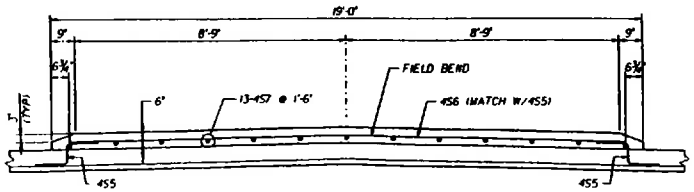

SECTION THRU TRAFFIC SEPARATOR

ESTIMATED QUANTITIES			
ITEM		UNIT	QUANTITY
CLASS II CONCRETE (BRIDGE DECK)	SLAB *	CU. YD.	802.1
	HAUNCH		40.7
	TOTAL		842.8
REINFORCING STEEL (SUPERSTRUCTURE)		LBS.	212,000

* INCLUDES 84.4 CU. YD. FOR TRAFFIC SEPARATOR

WORK THIS SHEET WITH SHEETS B-16 & B-18.

4.3/3

REVISIONS					
Date	By	Description	Date	By	Description

	Name	Date
Drawn by	DCW	10/97
Checked by	MH	10/97
Designed by	MH	10/97
Checked by	ADS	10/97
Approved by	MARK S. EICHOLTZ	

ENGINEER OF RECORD:
URS Greiner, Inc.
P.O. BOX 3545, 700 WEST
COURTNEY CAMPBELL CAUSEWAY
TAMPA, FLORIDA 33601-3545

LOGO: URS Greiner

SEAL: Mark S. Eicholtz 3/2/98

FLORIDA DEPARTMENT OF TRANSPORTATION
STRUCTURES DESIGN OFFICE

ROAD NO.	COUNTY	PROJECT NO.
SR 414	SEMINOLE	77002-3505

SHEET TITLE: SUPERSRUCTURE SECTION

PROJECT NAME: S.R. 414 OVER S.R. 434

Drawing No.

Index No.

WINDMILL WATTLAND D.
J:\BDECW806.FGBM

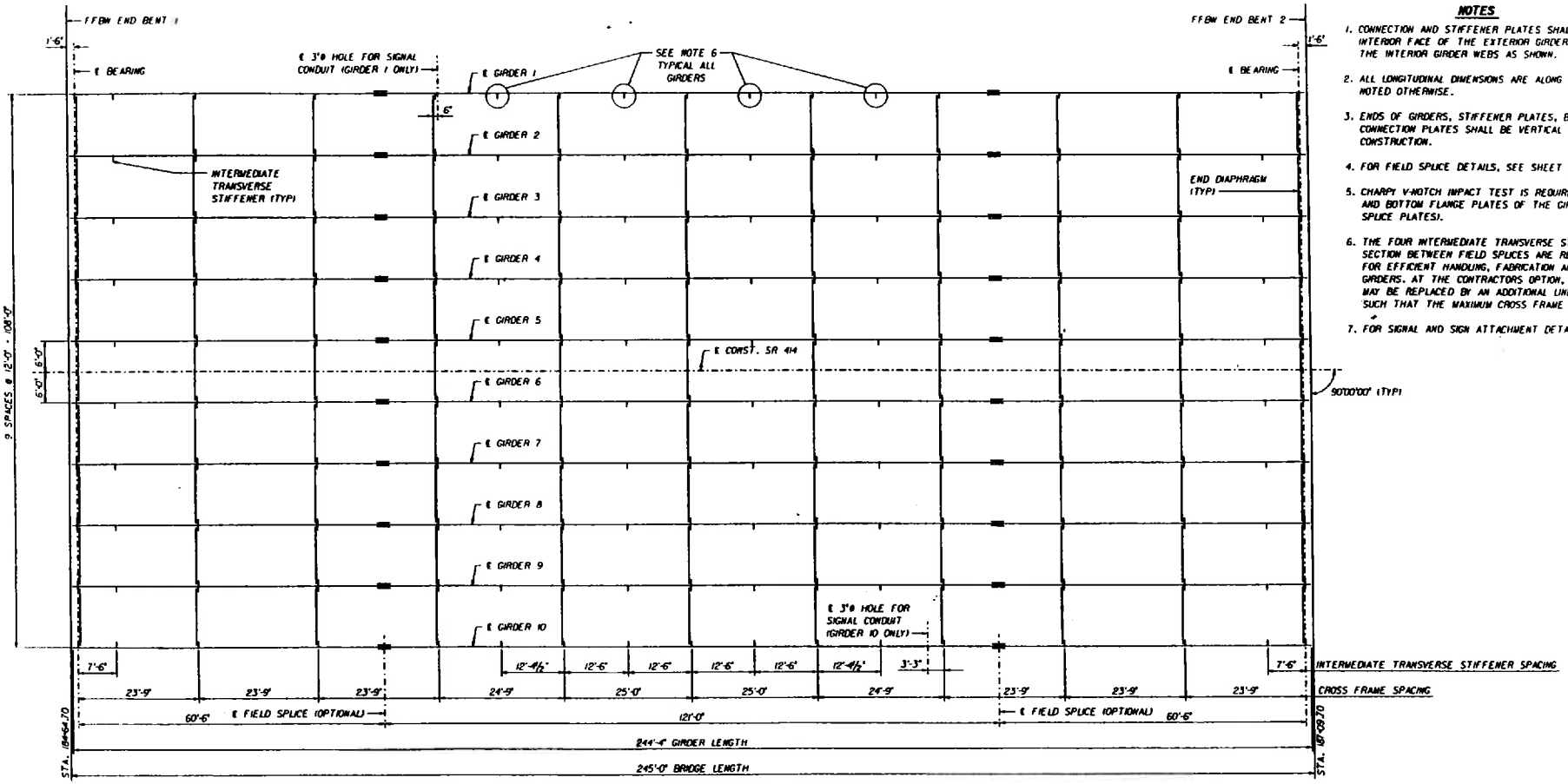

NOTES

1. CONNECTION AND STIFFENER PLATES SHALL BE LOCATED ON THE INTERIOR FACE OF THE EXTERIOR GIRDER WEBS AND LOCATED ON THE INTERIOR GIRDER WEBS AS SHOWN.
2. ALL LONGITUDINAL DIMENSIONS ARE ALONG ℄ GIRDER, UNLESS NOTED OTHERWISE.
3. ENDS OF GIRDERS, STIFFENER PLATES, BEARING STIFFENERS AND CONNECTION PLATES SHALL BE VERTICAL UPON COMPLETION OF CONSTRUCTION.
4. FOR FIELD SPLICE DETAILS, SEE SHEET B-22.
5. CHARPY V-NOTCH IMPACT TEST IS REQUIRED FOR ALL WEB PLATES AND BOTTOM FLANGE PLATES OF THE GIRDERS (INCLUDING FIELD SPLICE PLATES).
6. THE FOUR INTERMEDIATE TRANSVERSE STIFFENERS IN THE MIDDLE SECTION BETWEEN FIELD SPLICES ARE REQUIRED BY AASHTO FOR EFFICIENT HANDLING, FABRICATION AND ERECTION OF THE GIRDERS. AT THE CONTRACTORS OPTION, THESE STIFFENERS MAY BE REPLACED BY AN ADDITIONAL LINE OF CROSS FRAMES SUCH THAT THE MAXIMUM CROSS FRAME SPACING IS 23'-9".
7. FOR SIGNAL AND SIGN ATTACHMENT DETAILS, SEE SHEET B-24.

FRAMING PLAN

4.3/4

REVISIONS					
Date	By	Description	Date	By	Description

	Name	Date
Drawn by	DCW	10/97
Checked by	MM	10/97
Designed by	MM	10/97
Checked by	MSE	10/97
Approved by	MARK S. EICHOLTZ	

ENGINEER OF RECORD: URS Greiner, Inc. P.O. BOX 164, 748 WEST COURTNEY CAMPBELL CAUSEWAY TAMPA, FLORIDA 33607-2410

LOGO: URS Greiner

SEAL: Mark S. Eicholtz 3/2/98

FLORIDA DEPARTMENT OF TRANSPORTATION
STRUCTURES DESIGN OFFICE

STATE NO.	COUNTY	PROJECT NO.
SR 414	SEMINOLE	77002-3505

SHEET TITLE: FRAMING PLAN

PROJECT NAME: S.R. 414 OVER S.R. 434

Drawing No.

Index No.

FED. ROAD DIV. NO.	STATE	PROJECT NO.	FOLD NO.	SHEET NO.
3	FLA.	—		B-80

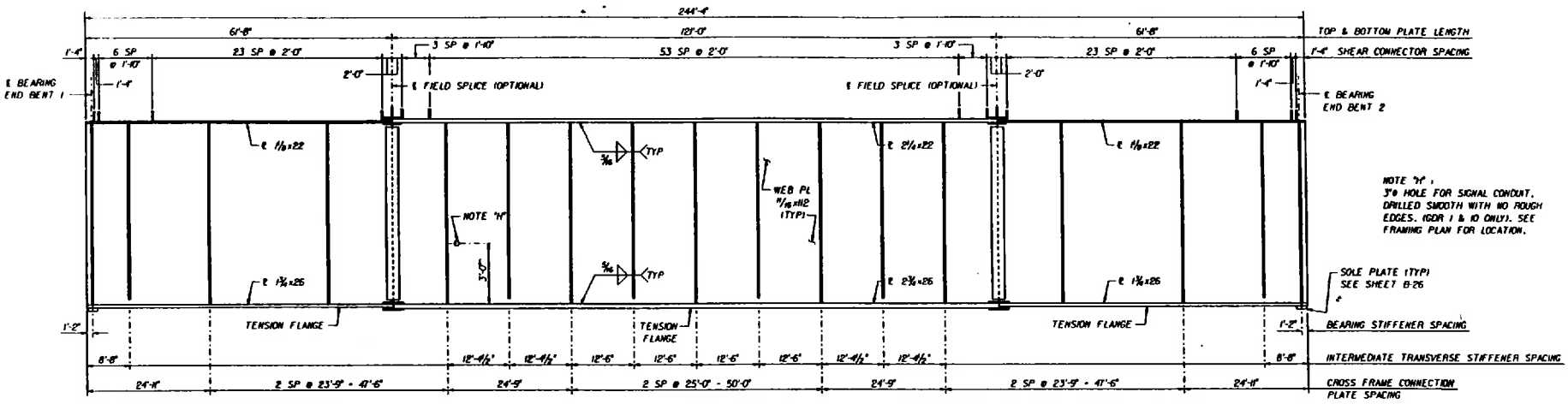

NOTE "H":
3" ø HOLE FOR SIGNAL CONDUIT. DRILLED SMOOTH WITH NO ROUGH EDGES. (GDR 1 & 10 ONLY). SEE FRAMING PLAN FOR LOCATION.

GIRDER ELEVATION

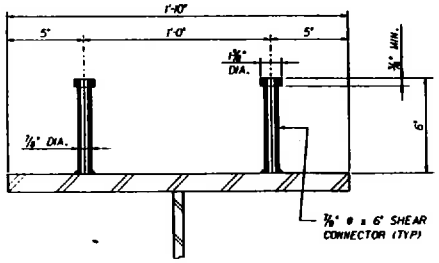

SHEAR CONNECTOR DETAIL

4.3/5

REVISIONS					
Date	By	Description	Date	By	Description

	Name	Date
Drawn by	DCW	10/97
Checked by	MH	10/97
Designed by	MH	10/97
Checked by	MSE	10/97
Approved by	MARK S. EICHOLTZ	

ENGINEER OF RECORD:
URS Greiner, Inc.
P.O. BOX 2846, 7400 WEST
COURTNEY CAMPBELL CAUSEWAY
TAMPA, FLORIDA 33607-1462

LOGO: URS Greiner

SEAL: Mark S. Eicholtz 3/2/98

FLORIDA DEPARTMENT OF TRANSPORTATION
STRUCTURES DESIGN OFFICE

ROAD NO.	COUNTY	PROJECT NO.
SR 414	SEMINOLE	77002-3505

SHEET TITLE: GIRDER ELEVATION

PROJECT NAME: S.R. 414 OVER S.R. 434

Drawing No.

Index No.

BORENBOI.FOBJ WATTLAND.C.P. BIRDIAG

Received 1/22/98
4.3/6

AASHTO BARS™

An AASHTOWARE™ Product

Bridge Analysis and Rating System

DATA PREPARATION INSTRUCTIONS

MANUAL 2

1/98 FDOT #21.36

THIRD EDITION
AUGUST, 1993

REVISED
JUNE, 1994

*AASHTOWARE and BARS are trademarks of the American Association of State Highway and Transportation Officials (AASHTO).
©Copyright 1987-1993 by American Association of State Highway and Transportation Officials, Inc.
All Rights Reserved.

BRIDGE ANALYSIS AND RATING SYSTEM
INPUT DATA FORM CARD TYPE 01

CARD TYPE		DATE M	DATE D	DATE Y	RATING ANALYST IDENTIFICATION	RATING TYPE EXCEPTIONS I	O	P	INV. LOAD NAME	OPERATING LOAD NAME	OPERATING ALLOWABLE STRESS RATIO (I / I (INV.))	POSTING VEH. 1 LOAD NAME	POSTING VEH. 2 LOAD NAME	POSTING VEH. 3 LOAD NAME	POSTING ALLOWABLE STRESS RATIO (I / I (INV))	SPEC. ALLOWABLE STRESS RATIO (I / I (INV))	BATCH PROCESS CONTROL		POST RATING		TIMINGS	TABLES
1-2	3-8	9-10	11-12	13-14	15-30	31	32	33	34-37	38-41	42-45	46-49	50-53	54-57	58-61	62-65	66-69	70-73	74-77	78	79	80
01		01	22	98	ANDREW D SAFKO	A	A	A									*LF*		POST			2

Check : TMM 4/24/98
Check : MSE 4/30/98

4.3/7

BRIDGE ANALYSIS AND RATING SYSTEM
INPUT DATA FORM CARD TYPES 02, 05 AND 06

STRUCTURE HEADER AND DESCRIPTION

CARD TYPE	STRUCTURE GROUP ID	STRUCTURE NO.	RATING ANALYST IDENTIFICATION	ENGR. ATTN.	OVERRULE BATCH RAT. EXCEPT'S	OVERRULE FILE REQUESTS AND OUTPUT DATA EXCEPT'S	F.L. BM.	CURB DIST. "X" In.	STRUCTURE TYPE	YEAR OF CONSTRUCTION	STRUCTURE LENGTH F	Feet	In	1/16	ROADWAY WIDTH F	Feet	In	1/16	NUMBER OF SPANS	P=NEGATE SPEC	LIVE LOAD TRUCK DESIGNATION INV.	OPER.
02	001	001						24		98	X	X	245	00	00	X	X	114	9000	01		HS20 HS20

STRUCTURE LOCATION AND PERMANENT IDENTIFICATION FACTORS

CARD TYPE	STRUCTURE GROUP ID	STRUCTURE NO.	BRIDGE NUMBER	DISTRICT	COUNTY	CONSTRUCTION ROUTE	SECTION	STATION	MICROFILM REEL NUMBER DESIGN PLANS	COMPUTATIONS	CORRESPONDENCE	KEY ROUTE ID	MARKED ROUTE
05	001	001	770083	5	SEM	SR414		184+470					SR414

COMMENTS

CARD TYPE	STRUCTURE GROUP ID	STRUCTURE NO.	SEQ	ANALYST REMARKS TO BE DUPLICATED IN FORM AND CONTENT ON SUMMARY OF RATING CALCULATIONS
06	001	001	1	MAITLAND BLVD. (SR414) OVER SR434 - PLATE GIRDER
06			2	
06			3	
06			4	
06			5	
06			6	

4.3/8

BRIDGE ANALYSIS AND RATING SYSTEM
INPUT DATA FORM CARD TYPE 08

MEMBER DESCRIPTION SPECIFICATIONS – GIRDER, STRINGER, FLOOR BEAM

CARD TYPE	STRUCTURE GROUP ID	STRUCTURE NO.	MEMBER ID GI SI NO.	CONTINUE	TOTAL NO. OF SPANS	CANTIL. FLR. BM.	ANALYSIS CNTRL	SYMMETRICAL	SPAN 1,4,7,10,13,16 Fill	Feet	In	1/16	SPAN 2,5,8,11,14,17 Fill	Feet	In	1/16	SPAN 3,6,9,12,15,18 Fill	Feet	In	1/16	CRC SS RC CSC PSC CPS TMB	ALLOWABLE STRESS F_y psi	f'_b psi	f_b, f'_c, f''_c lbs/sq. in.	LIVE LOAD DISTRIB. FACTOR "E" or "S" in Feet	END FLOOR BEAM	THROUGH	MAXIMUM IMPACT FACTOR XXX INV	OP	POST	SPEC	STIFFENER CODE	END FIXITY L	R
08	001	001	001		1				XX	242	00	00									CSC	50000		4500	2.182							X	
08																																	
08																																	
08																																	
08																																	
08																																	
08																																	
08																																	
08																																	
08																																	
08																																	
08																																	
08																																	
08																																	
08																																	
08																																	
08																																	
08																																	
08																																	
08																																	
08																																	

4.3/9

BRIDGE ANALYSIS AND RATING SYSTEM
INPUT DATA FORM CARD TYPE 09

(5)* (7)*

RATING POSITION SPECIFICATIONS

CARD TYPE	STRUCTURE GROUP ID	STRUCTURE NO.	MEMBER ID G/S/B NO.	SP PP	RATING POSITION LOCATION — DISTANCE FROM LEFT SUPPORT F	I	Feet	In	1/16	MVB	MOM. IN FT-KIPS / SHEAR IN KIPS — SECTION CAPACITY	CAPACITY REDUCT. DUE TO DL	SP PP	RATING POSITION LOCATION — DISTANCE FROM LEFT SUPPORT F	I	Feet	In	1/16	MVB	MOM. IN FT-KIPS / SHEAR IN KIPS — SECTION CAPACITY	CAPACITY REDUCT. DUE TO DL
0,9	001	001	G01			X	60	06	00	B				X	X	181	06	00	B		
0,9																					
0,9																					
0,9																					
0,9																					
0,9																					
0,9																					
0,9																					
0,9																					
0,9																					
0,9																					
0,9																					
0,9																					
0,9																					
0,9																					
0,9																					
0,9																					
0,9																					
0,9																					
0,9																					

* So Program will use lighter section

4.3/10

F_{WS} = 15 PSF (12) = 180 PLF

SIP Forms = 20 PSF (12) = 240 PLF 203

$\left[12 - \left(\frac{22''}{12}\right)\right]$

(Top Flange) Move to Card 14

MEDIAN: $[(19' \cdot 0.5') - (0.75 \cdot 0.25')]\ 150\ lb/ft^3$

$= \frac{1396.875}{10\ \text{Girders}} = 139.687\ lb/ft$

BARRIER: $\frac{418\ lb/ft \cdot 2\ ea}{10\ \text{Girders}} = 83.6\ lb/ft$

$= 223.287\ lb/ft$

BRIDGE ANALYSIS AND RATING SYSTEM
INPUT DATA FORM CARD TYPE 10

On Composite Section (See Card 14 for Non Composite SDL).

Chk: gm

Date - 5-7-98

SUPERIMPOSED DEAD LOADS - GIRDERS, STRINGERS, FLOOR BEAMS

	Card Type (1-2)	Structure Group ID (3-5)	Structure No. (6-8)	Member ID G/S/B No. (9-11)	Symmetrical (12)	Span No. (13-14)		Distance From Left Support in Span: Feet (22-27)	Distance From Left Support in Span: In 1/16 (28-30)	Load Type (32)	Distributed or Concentrated Load "P" in Kips "W" in Lbs/Ft: P or W_L (33-38)	Distributed or Concentrated Load: W_R (39-44)	Length (Distributed): Feet (45-50)	Length (Distributed): In 1/16 (51-53)
FWS	1.0	001	001	G01		01		XX	0 0 0	W	15.0		XX	24.5 00 00
BARRIER & MEDIAN	1.0	001	001	G01		01		XX	0 0 0	W	23.3		XX	24.5 00 00
SIP Forms	1.0	001	001	G01		01		XX	0 0 0	W	20.0		XX	24.5 00 00
	1.0													
	1.0													
	1.0													
	1.0													
	1.0													
	1.0													
	1.0													
	1.0													
	1.0													
	1.0													
	1.0													
	1.0													
	1.0													
	1.0													
	1.0													
	1.0													

180

203

Move to Card 14

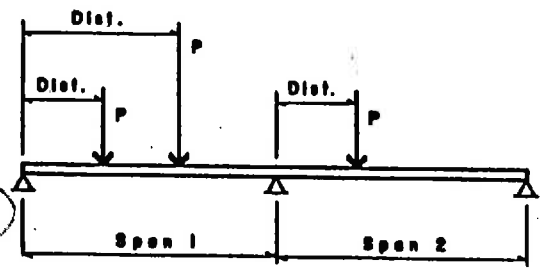

CONCENTRATED LOADS

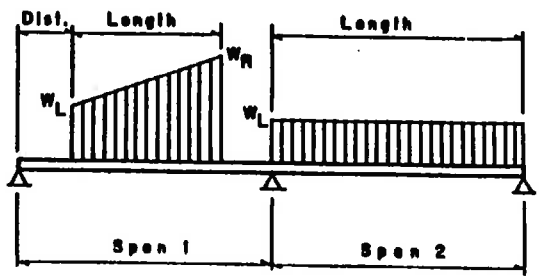

DISTRIBUTED LOADS

4.3/11

BRIDGE ANALYSIS AND RATING SYSTEM
INPUT DATA FORM CARD TYPE II

SECTION RANGE SPECIFICATIONS

CARD TYPE	STRUCTURE GROUP ID	STRUCTURE NO.	MEMBER ID (G1 S1 B1 NO.)	SYMMETRICAL	SPAN NO.	SECTION RANGE: RANGE NO.	RANGE LENGTH: Ft.	Feet	In	1/16	SEC NO.: Lt.	Rt.	SEC VAR: STYLE	TAB	CODE	HINGE LOCATION: FIRST HINGE DISTANCE FROM LEFT: Ft.	Feet	In	1/16	SECOND HINGE DISTANCE FROM LEFT: Ft.	Feet	In	1/16	HYBRID GIRDER: YIELD STRENGTH: BASE SECTION: AB	F_y (psi)	EXCEPTION: TWB	F_y (psi)
1	0 0 1	0 0 1	G 0 1		0 1	0 1	X X	60	0 6	0 0	0 1																
1	0 0 1	0 0 1	G 0 1		0 1	0 2	X X	1 2 1	0 0	0 0	0 2																
1	0 0 1	0 0 1	G 0 1		0 1	0 3	X X	1 8 1	0 6	0 0	0 3																

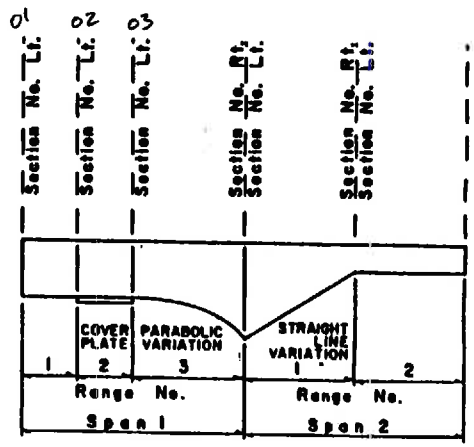

SECTION RANGE

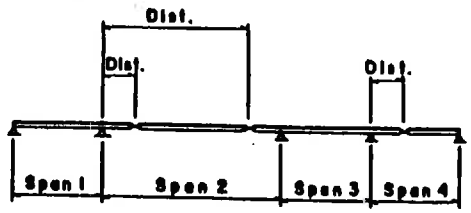

INTERMEDIATE HINGES

4.3/12

Chk gm 5-7-98

BRIDGE ANALYSIS AND RATING SYSTEM
INPUT DATA FORM CARD TYPE 12

SECTION PROPERTIES (STEEL OR TIMBER) - GIRDERS, STRINGERS, FLOOR BEAMS

CARD TYPE	STRUCTURE GROUP ID	STRUCTURE NO.	MEMBER ID		SECTION NO.	NON-DETAILED DESCRIPTION A in.^{2}	I in.^{4}	S in.^{3}		CODE	DETAILED DESCRIPTION SECTION NO.	SAME EXCEPT	h in.	I	A_1 or X_1 in.^{2} or in.	I_{x_1} or Y_1 in.^{4} or in.	d_y in.	d_x in.
1,2	001	001	001							X	01		14.88	01	22.00 P	126	14.31	
1,2	001	001	001						*	X	01			02	68.75	12.00	57.75	
1,2	001	001	001							X	01			03	26.00	126	0.875	
1,2	001	001	001							X	02		17.00	01	22.00 P	2.25	15.88	
1,2	001	001	001						*	X	02			02	68.75	12.00	56.75	
1,2	001	001	001							X	02			03	26.00	2.75	0.375	
1,2	001	001	001							X	03		14.88	01	22.00 P	126	14.31	
1,2	001	001	001						*	X	03			02	68.75	12.00	57.75	
1,2	001	001	001							X	03			03	26.00	2.75	0.875	
1,2																		
1,2																		
1,2																		
1,2																		
1,2																		
1,2																		
1,2																		
1,2																		
1,2																		
1,2																		
1,2																		

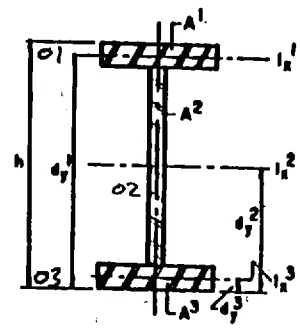

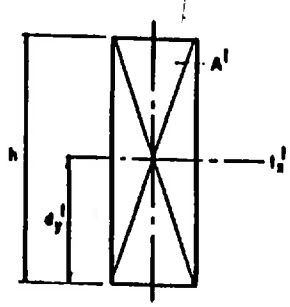

DETAILED DESCRIPTION

* Deleted - Ignored By Program.

4.3/13

Eff. Width: $\frac{245'}{4} = 61.25'$

Girder Spacing $= 12'$

$\frac{12 \cdot 8''}{12 \text{ in/ft}} = 8'$ *

Chk'd 9m
Date 5-7-98

Add Non-Composite SDL to Slab Width

1. Steel Details Factor

$\frac{201,725 \text{ lbs}}{10 \text{ Girders} \times 245''} = 82.3 \text{ lb/ft}$ ← See 4.23/4A

2. S.I.P. Forms

$20 \text{ psf} \times \left[12' - \left(\frac{22''}{12}\right)\right] = 203 \text{ lb/ft}$

Bm Spa — Top Flange

BRIDGE ANALYSIS AND RATING SYSTEM
INPUT DATA FORM CARD TYPE 14

Equiv Slab Width $W = [82.3 \text{ lb/ft} / (\frac{8''\text{Slab}}{12} \times 150 \text{ lb/ft}^3)] \times 12 \text{ in/ft} = 9.88''$ $W = [203 \text{ lb/ft} / (\frac{8}{12} \times 150)] \times 12 = 24.36''$

SECTION PROPERTIES (COMPOSITE REINFORCED CONCRETE SLAB WITH STEEL, REINFORCED CONCRETE OR PRESTRESSED CONCRETE)

Card Type	Structure Group ID	Structure No	Member ID	Symmetrical	Span No	Range No	Range Length Feet	Range Length In.	Composite Code	Value of "n"	Section No.	Same Except	Composite Section Description: Concrete Slab Width In.	Thick In.	Fillet Width In.	Fillet Thick In.	Effect. Width In.	Effect Thick In.	Dist. to Top of Beam Sec In.	Slab Reinforcement $(A_s)_s$ In.²	$(d_s)_s$ In.	F_y psi
14	001	001	001		01	01	XX	60 06 00	C		01		144.0	8.0	18.0	3.0	96.0	8.0	5.88	4.7	4.0	60000
14	001	001	001		01	02	XX	12 00 00	C		02		144.0	8.0	18.0	3.0	96.0	8.0	4.75	4.7	4.0	60000
14	001	001	001		01	03	XX	60 06 00	C		03		144.0	8.0	18.0	3.0	96.0	8.0	5.88	4.7	4.0	60000

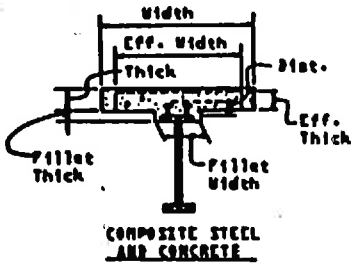

COMPOSITE STEEL AND CONCRETE

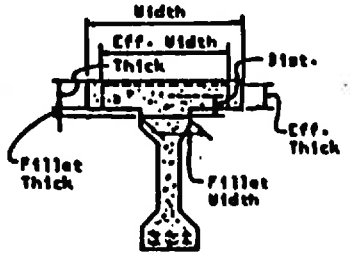

COMPOSITE PRESTRESSED CONCRETE

144" (Actual Slab) + 9.88 (Steel Details) + 24.36 (SIP) = 178.24 in.

(Changed to 30 to match Dwg B-17.)

Area of Steel (Effective Width)

8 Bars 454 = 8 · 0.20 = 1.6 in²
10 Bars 552 = 10 · 0.31 = 3.1 in²
4.7 in²

4.3/14

Chk 9m
Date 5-7-98

BRIDGE ANALYSIS AND RATING SYSTEM
INPUT DATA FORM CARD TYPE 16

SPECIFICATIONS FOR LATERAL BRACING POINTS (L_b) AND STIFFENER SPACING

CARD TYPE	STRUCTURE GROUP ID	STRUCTURE NO.	MEMBER ID GI SI BI	MEMBER ID NO.	SYMMETRICAL	SPAN NO.	T B	SECTION RANGE: RANGE NO.	RANGE LENGTH Ft	RANGE LENGTH Feet	RANGE LENGTH In	RANGE LENGTH 1/16	SUPPORT CODE LT	SUPPORT CODE RT	SPACING OF EQUALLY SPACED POINTS WITHIN RANGE: NO. OF SPACING	SPACING (LENGTH) Ft	SPACING (LENGTH) Feet	SPACING (LENGTH) In	SPACING (LENGTH) 1/16	MAX. STIFFENER SPACING WITHIN RANGE Ft	MAX. STIFFENER SPACING WITHIN RANGE Feet	MAX. STIFFENER SPACING WITHIN RANGE In	MAX. STIFFENER SPACING WITHIN RANGE 1/16
1,6	0,0,1	0,0,1	G 0,1		0,1	T	0,1	XX		24	2	0,0,0											
1,6	0,0,1	0,0,1	G 0,1		0,1	B	0,1	XX		24	2	0,0,0	SP	SP						XX	25	0	0
1,6																							
1,6																							
1,6	0,0,1	0,0,1	G 0,1		0,1	T	0,1	XX		24	2	0,0,0	G										
1,6	0,0,1	0,0,1	G 0,1		0,1	B	0,1	XX		7	6	0,0	SP	NF						XX		7	6
1,6	0,0,1	0,0,1	G 0,1		0,1	B	0,2	XX		16	3	0,0	NF	SP						XX		16	3
1,6	0,0,1	0,0,1	G 0,1		0,1	B	0,3	XX		47	6	0,0	SP	SP	0,2	XX		23	0,9	XX		23	9
1,6	0,0,1	0,0,1	G 0,1		0,1	B	0,4	XX		24	9	0,0	SP	SP						XX		12	4 8
1,6	0,0,1	0,0,1	G 0,1		0,1	B	0,5	XX		50	0,0	0,0	SP	SP	2	XX		25	0	XX		12	4
1,6	0,0,1	0,0,1	G 0,1		0,1	B	0,6	XX		24	0,9	0,0	SP	SP						XX		12	4 8
1,6	0,0,1	0,0,1	G 0,1		0,1	B	0,7	XX		47	6		SP	SP	0,2	XX		23	0,9	XX		23	9
1,6	0,0,1	0,0,1	G 0,1		0,1	B	0,8	XX		16	3	0,0	SP	NF						XX		16	3
1,6	0,0,1	0,0,1	G 0,1		0,1	B	0,9	XX		7	6	0,0	NF	SP						XX		7	6
1,6																							
1,6																							
1,6																							
1,6																							
1,6																							
1,6																							

4 3/5

*AASHTO*AASHTO*AASHTO*AASHTO*AASHTO*AASHTO*AASHTO*AASHTO*AASHTO*AASHTO*AASHTO*AASHTO*AASHTO*AASHTO*AASHTO*AASHTO*

5/6/98

AMERICAN ASSOCIATION OF STATE HIGHWAY
AND TRANSPORTATION OFFICIALS

A PROPRIETARY COMPUTER SOFTWARE PRODUCT

OUTPUT FILES

TITLE.LIS
LISTA.LIS
RATEZ.LIS
SUMARY.LIS
ERRSUM.LIS
REPORT.LIS
~~[illegible]~~
NOFLEX.LIS
NOTRK.LIS

```
AASHTOWAREtm   BBBBBBBBBBBB        AAAAAAA        RRRRRRRRRRR        SSSSSSSSSSSSSS
               BBBBBBBBBBBBB      AAAAAAAAA       RRRRRRRRRRRR       SSSSSSSSSSSSSSS
               BBB        BBB    AA       AA     RRR       RRR      SSSS       SSSS
               BBB        BBB   AAA       AAA    RRR       RRR      SSS
               BBB        BBB   AAA       AAA    RRR       RRR      SSSS
               BBBBBBBBBBBB     AAA       AAA     RRRRRRRRRRRR       SSSSSSSSSSSSSS
               BBBBBBBBBBBBB    AAA       AAA     RRRRRRRRRRR          SSSSSSSSSSSSSS
               BBB        BBB   AAAAAAAAAAAAA     RRR     RRR                  SSSS
               BBB        BBB   AAAAAAAAAAAAA     RRR      RRR                 SSS
               BBB        BBB   AAA       AAA     RRR       RRR      SSSS      SSSS
               BBBBBBBBBBBBB    AAA       AAA     RRR        RRR      SSSSSSSSSSSSSS
               BBBBBBBBBBBB     AAA       AAA     RRR         RRR      SSSSSSSSSSSS
```

BRIDGE ANALYSIS AND RATING SYSTEM

(C) COPYRIGHT 1994 BY THE AMERICAN ASSOCIATION OF STATE
HIGHWAY AND TRANSPORTATION OFFICIALS, INC.
444 NORTH CAPITOL STREET, N.W., SUITE 249
WASHINGTON, D.C. 20001 U.S.A.
(202) 624-5800

RELEASE 5.5 - MOD 3.0

JUNE 30, 1995

*AASHTO*AASHTO*AASHTO*AASHTO*AASHTO*AASHTO*AASHTO*AASHTO*AASHTO*AASHTO*AASHTO*AASHTO*AASHTO*AASHTO*AASHTO*AASHTO*

4.3/10

TITLE.LIS

BARS-PC R5.5-MOD 3.0

```
                                   RECORD                                                                   REC.NO.
01      012298Andrew D. Safko AAA                                                *LF*    POST  2              100
02001001                                  24      98XX 2450000XX 114000001 HS20HS20                          100
05001001  7700835SEM   SR414             1844470                                  SR414                     200
06001001 1MAITLAND BLVD. (SR414) OVER SR434 - PLATE GIRDER                                                    300
08001001G01 01   XX 2420000                      CSC50000 45002.182          X                                400
09001001G01  XX  600500B                 XX 1810700B                                                         500
10001001G01 01       XX   0 0 0 W180.0'    XX 2450000'                                                        600
10001001G01 01       XX   0 0 0 W223.3'    XX 2450000'                                                        700
11001001G01 0101XX  60060001                                                                                  800
11001001G01 0102XX 121000002                                                                                  900
11001001G01 0103XX  60060003                                                                                 1000
12001001G01                              X01   114.880122.00P 1.125114.31                                    1100
12001001G01                               01         02.6875 112.00 57.75                                    1200
12001001G01                               01         0326.00   1.75 0.875                                    1300
12001001G01                              X02   117.000122.00P  2.25115.88                                    1400
12001001G01                               02         02.6875 112.00 58.75                                    1500
12001001G01                               02         0326.00   2.75 1.375                                    1600
12001001G01                              X03   114.880122.00P 1.125114.31                                    1700
12001001G01                               03         02.6875 112.00 57.75                                    1800
12001001G01                               03         0326.00   1.75 0.875                                    1900
14001001G01 0101XX  600600C  01  '178.2 8.030.0 3.0 96.0 8.0 5.88  4.7 4.060000                              2000
14001001G01 0102XX 1210000C  02  '178.2 8.030.0 3.0 96.0 8.0 4.75  4.7 4.060000                              2100
14001001G01 0103XX  600600C  03  '178.2 8.030.0 3.0 96.0 8.0 5.88  4.7 4.060000                              2200
16001001G01 01T01XX 2420000C                                                                                  2300
16001001G01 01B01XX   7 6  SPNP              XX   7 6                                                         2400
16001001G01 01B02XX  16 3  NPSP              XX  16 3                                                         2500
16001001G01 01B03XX  47 6  SPSP 2XX  23 9    XX  23 9                                                         2600
16001001G01 01B04XX  24 9  SPSP              XX  12 4 8                                                       2700
16001001G01 01B05XX  50 0  SPSP 2XX  25 0    XX  12 6                                                         2800
16001001G01 01B06XX  24 9  SPSP              XX  12 4 8                                                       2900
16001001G01 01B07XX  47 6  SPSP 2XX  23 9    XX  23 9                                                         3000
16001001G01 01B08XX  16 3  SPNP              XX  16 3                                                         3100
16001001G01 01B09XX   7 6  NPSP              XX   7 6                                                         3200
```

THE FOLLOWING STRUCTURES WERE SELECTED

001001

CHK: MSE 5/6/98
CHK: JM 5-7-98

4.3/17

LISTA.LIS

STRUCTURE I.D. = 001-001

****
*
STRUCTURE HEADER AND DESCRIPTION
****

100-- 2 EA/I/O/P = FILE REQUESTS AND OUTPUT DATA EXCEPTIONS
TYPE = YEAR = 98 LEN = 245.00 FT. WIDTH = 114.00 FT. 1 SPANS SP.LOAD =
INV.LL.TRK.= HS20 OP.LL.TRK.= HS20

****
*
STRUCTURE LOCATION AND PERMANENT IDENTIFICATION FACTORS
****

200-- 5 BRIDGE= 770083 DIST./CO.= 5 SEM CONST. ROUTE = SR414 CONST. SECT.= CONST. STA.= 184+44.70
MICROFILM REEL NO. DESIGN PLANS= COMPUTATIONS= CORRESPONDENCE=
ROUTE I.D.= MARKED ROUTE = SR414

****
*
COMMENTS
****

300-- 6 1 MAITLAND BLVD. (SR414) OVER SR434 - PLATE GIRDER

****
*
MEMBER SPECIFICATIONS AND REQUIRED ANALYSIS-GIRDER,STRINGER AND FLOOR BEAM
****

	MEMBER ID	SPANS SYMM	STIFF. CODE	SPAN 1 (SPAN 4)	SPAN 2 (SPAN 5)	SPAN 3 (SPAN 6)	MATL CODE	ALLOWABLE STRESS FY	FB FC*	FC**	LL DIST. FACTOR	END FL.BM	THRU DECK	MAX INV	IMPACT OP.	POST	FACTOR SPEC
400-- 8	G 1	1	X	242.000	.000	.000	CSC	50000.00	4500.00		2.182			.00	.00	.00	.00

****
*
MEMBER DESCRIPTION-GIRDER STRINGER AND FLOOR BEAM
****

	MEMBER ID	SPAN CP.	DISTANCE	M V	MOMENT OR SHEAR CAP.	RED.	SPAN CP.	DISTANCE	M YR	MOMENT OR SHEAR CAP.	RED.
500-- 9	G 1	0	60.42FT	B	.00	.00	0	181.58	B	.00	.00

****
*
SUPERIMPOSED DEAD LOADS-GIRDERS,STRINGERS AND FLOOR BEAMS
****

MEMBER	SYMM.	SPAN	DISTANCE	FR.	LOAD	LOAD	LENGTH

4.3/18

RATE2.LIS

Chk 9th 5-7-98

	ID	NO.	LEFT SUPP.	TYPE	P OR W(L)	W(R)	
600--10	G 1	1	.000FT.	W	180.0	.0	245.000FT.
700--10	G 1	1	.000FT.	W	223.3	.0	245.000FT.

****

SECTION RANGE SPECIFICATIONS

****

MEMBER ID	SYMM.	SPAN NO.	RANGE NO.	RANGE LENGTH	SECTION NO. LEFT	SECTION NO. RIGHT	SEC. VAR.	HINGE CODE	HINGE 1 DIST.	HINGE 2 DIST.	HYBRID GIRDER CODE	HYBRID GIRDER FY	CODE	FY
800--11	G 1	1	1	60.500FT.	1	0			.000FT.	.000FT.		0.		0.
900--11	G 1	1	2	121.000FT.	2	0			.000FT.	.000FT.		0.		0.
1000--11	G 1	1	3	60.500FT.	3	0			.000FT.	.000FT.		0.		0.

****

SECTION PROPERTIES (STEEL OR TIMBER) - GIRDERS STRINGERS, FLOOR BEAMS

****

MEMBER ID	SEC.	A	I	S	CODE	SAME	ADR	H	ELE	A	IX	DY	DX
		NON-DETAILED DESCRIPTION				DETAILED DESCRIPTION							
1100--12	G 1	0	.00	.0	.0	X	1	0	114.88	1	22.00P	1.1	114.3	.0
1200--12	G 1	0	.00	.0	.0		1	0	.00	2	.69	112.0	57.8	.0
1300--12	G 1	0	.00	.0	.0		1	0	.00	3	26.00	1.8	.9	.0
1400--12	G 1	0	.00	.0	.0	X	2	0	117.00	1	22.00P	2.3	115.9	.0
1500--12	G 1	0	.00	.0	.0		2	0	.00	2	.69	112.0	58.8	.0
1600--12	G 1	0	.00	.0	.0		2	0	.00	3	26.00	2.8	1.4	.0
1700--12	G 1	0	.00	.0	.0	X	3	0	114.88	1	22.00P	1.1	114.3	.0
1800--12	G 1	0	.00	.0	.0		3	0	.00	2	.69	112.0	57.8	.0
1900--12	G 1	0	.00	.0	.0		3	0	.00	3	26.00	1.8	.9	.0

SEE Bars manual P8-1

Requested Compact Code, but program uses Braced Non-Compact (See NUFLEX.LIS)

****

SECTION PROPERTIES (COMPOSITE) - GIRDERS, STRINGERS, FLOOR BEAMS

****

MEMBER ID	SYMM	SPAN RANGE		RANGE LENGTH	COMP CODE	N	SECT	A SAME	R	WIDTH	THICK -NESS	FILLET WIDTH	FILLET THICK.	EFFECT. WIDTH	EFFECT. THICK.	DIST TO TOP SECT.
2000--14	G 1	1	1	60.500FT.	C	0	1	0		178.20	8.00	30.00	3.00	96.00	8.00	5.88
2100--14	G 1	1	2	121.000FT.	C	0	2	0		178.20	8.00	30.00	3.00	96.00	8.00	4.75
2200--14	G 1	1	3	60.500FT.	C	0	3	0		178.20	8.00	30.00	3.00	96.00	8.00	5.88

****

BRACING LENGTH SPECIFICATIONS - LOAD FACTOR ANALYSIS

****

MEMBER ID	SYMM	SPAN RANGE T/B			RANGE LENGTH	SUPPORT COND. LEFT	SUPPORT COND. RIGHT	SPACES	SPACING DISTANCE	STIFF SPACING
2300--16	G 1	1	T	1	242.000FT.C			0	.000FT.	.000IN.
2400--16	G 1	1	B	1	7.500FT.SP	NP		0	.000FT.	90.000IN.
2500--16	G 1	1	B	2	16.250FT.NP	SP		0	.000FT.	195.000IN.
2600--16	G 1	1	B	3	47.500FT.SP	SP		2	23.750FT.	285.000IN.
2700--16	G 1	1	B	4	24.750FT.SP	SP		0	.000FT.	148.500IN.
2800--16	G 1	1	B	5	50.000FT.SP	SP		2	25.000FT.	150.000IN.
2900--16	G 1	1	B	6	24.750FT.SP	SP		0	.000FT.	148.500IN.

Since Program does not use Compact, the Capacities are incorrect. Correct Capacities and Ratings by hand.

MSE 5/6/98

4.3/19

3000--16	G	1	1	B	7	47.500FT.SP	SP	2	23.750FT.	285.000IN.
3100--16	G	1	1	B	8	16.250FT.SP	NP	0	.000FT.	195.000IN.
3200--16	G	1	1	B	9	7.500FT.NP	SP	0	.000FT.	90.000IN.

4.3/20

SUMMARY OF RATING CALCULATIONS------STRUCTURE MEMBER G 1 BARS-PC RELEASE 5.5
INVENTORY AND/OR OPERATING ANALYSIS

INPUT CODING -- STRUCTURE 770083 D/P STR. I.D.-- 001-001

DATE 1/22/98
BY Andrew D. Safko

INVENTORY LIVE LOAD	INVENTORY RATING	OPERATING LIVE LOAD	OPERATING RATING
HS20	HS ~~10.30~~ 34.89	HS20	HS ~~17.49~~ 58.25

STRUCTURE DESCRIPTION --

IDENTIFICATION	770083
TYPE	
YEAR OF CONSTR.	1998
LENGTH	245.00 FEET
ROADWAY WIDTH	114.00 FEET
NUMBER OF SPANS	1

LOCATION --

DISTRICT	5
COUNTY	SEM
CONSTR. RTE.	SR414
CONSTR. SEC.	
CONSTR. STA.	184+44.70
KEY RTE.	
MARKED RTE.	SR414

MICROFILM REEL NUMBERS --

DESIGN PLANS
COMPUTATIONS
CORRESPONDENCE

ANALYST REMARKS --

MAITLAND BLVD. (SR414) OVER SR434 - PLATE GIRDER

INVENTORY RATING SUMMARY --

MEMBER ID.	G 1
SPAN	1
CRITICAL C.P. DIST.	181.6 FEET
LIVE LOAD DESIGNATION	HS20

	~~SHEAR (KIPS)~~ Moment (Kip-ft)	
MEMBER CAPACITY	~~20615.8~~ 38,833.	See 4.2.3/17 (Compact/Plastic)
DL EFFECT	14251.9	See 4.2.3/10.
CAPACITY FOR (LL+I)	~~2814.7~~ 9,372.	
ACTUAL (LL+I)	5363.4	See 4.2.3/10
INVENTORY RATING	HS ~~10.30~~ 34.89 → 34.94	

OPERATING RATING SUMMARY --

MEMBER ID.	G 1
SPAN	1
CRITICAL C.P. DIST.	181.6 FEET
LIVE LOAD DESIGNATION	HS20

	~~SHEAR (KIPS)~~ Moment (Kip-ft)	
MEMBER CAPACITY	~~31026.4~~ 38,833.	
DL EFFECT	14251.9	
CAPACITY FOR (LL+I)	~~4691.2~~ 15,620.	
ACTUAL (LL+I)	5363.4	
OPERATING RATING	HS ~~17.49~~ 58.25.	

$$\text{Inv Rating} = \left(\frac{9,372}{5,363.4}\right) \times 20$$

$$\text{Cap}(LL+I) = \frac{38,833^{k\text{-}ft} - 1.3(14,251.9)^{k\text{-}ft}}{2.1667}$$

$$\text{Cap}(LL+I) = \frac{38,833 - 1.3(14,251.9)}{1.3}$$

AASHTO Manual for Condition Evaluation of Bridges - Section 6.5

DSN: MSE 5/6/98
CHK: JPM 5-7-98

4.3/21

SUMMARY OF RATING CALCULATIONS------STRUCTURE MEMBER G 1 BARS-PC RELEASE 5.5
POSTING ANALYSIS

INPUT CODING -- STRUCTURE 770083 D/P STR. I.D.-- 001-001

DATE 1/22/98
BY Andrew D. Safko

INVENTORY LIVE LOAD	INVENTORY RATING	OPERATING LIVE LOAD	OPERATING RATING	TRUCK TYPE	POSTING GROSS TONS
HS20	HS ~~10.50~~ • HS34.87	HS20	HS ~~17.49~~ • HS 58.25	VEH. SU2	~~42.09~~ 142.6
				VEH. SU4	~~43.37~~ 144.4
				VEH. C4	~~44.89~~ 149.4

STRUCTURE DESCRIPTION --

IDENTIFICATION	770083
TYPE	
YEAR OF CONSTR.	1998
LENGTH	245.00 FEET
ROADWAY WIDTH	114.00 FEET
NUMBER OF SPANS	1

LOCATION --

DISTRICT	5
COUNTY	SEM
CONSTR. RTE.	SR414
CONSTR. SEC.	
CONSTR. STA.	184+44.70
KEY RTE.	
MARKED RTE.	SR414

MICROFILM REEL NUMBERS --

DESIGN PLANS
COMPUTATIONS
CORRESPONDENCE

ANALYST REMARKS --

MAITLAND BLVD. (SR414) OVER SR434 - PLATE GIRDER

FDOT Bridge Load Rating Manual. Topic No.: 850-010-035-a

TRUCK TYPE VEH. SU2 (17 Tons).	TRUCK TYPE VEH. SU4 (35 Tons).	TRUCK TYPE VEH. C4 (36.65 Tons).
MEMBER ID. G 1	MEMBER ID. G 1	MEMBER ID. G 1
SPAN 1	SPAN 1	SPAN 1
CRITICAL C.P. DIST. 181.6 FEET	CRITICAL C.P. DIST. 181.6 FEET	CRITICAL C.P. DIST. 181.6 FEET

	Moment (K-FT) ~~SHEAR (KIPS)~~		~~SHEAR (KIPS)~~		~~SHEAR (KIPS)~~
MEMBER CAPACITY	~~51026.4~~ 38,833 •	MEMBER CAPACITY	~~51026.4~~ 38,833 •	MEMBER CAPACITY	~~51026.4~~ 38,833 •
DL EFFECT	14251.9 •	DL EFFECT	14251.9	DL EFFECT	14251.9
CAPACITY FOR (LL+I)	~~4691.2~~ 15,620 •	CAPACITY FOR (LL+I)	~~4691.2~~ 15,620 •	CAPACITY FOR (LL+I)	~~4691.2~~ 15,620 •
ACTUAL (LL+I)	1862.4	ACTUAL (LL+I)	3786.2	ACTUAL (LL+I)	3832.5
POSTING GROSS TONNAGE	~~42.8~~ 142.6	POSTING GROSS TONNAGE	~~43.4~~ 144.4.	POSTING GROSS TONNAGE	~~44.9~~ 149.4 •

$\frac{15,620}{1,862.4} * 17^{Tons}$

DSN: MSE 5/6/98
CHK: TM 5-7-98

4.3/22

SUMMARY OF RATING ANALYSIS --- D/P STRUCTURE I.D. 001-001 BARS-PC R5.5 PAGE 1

****

RATING TYPE = INVENTORY

FLEXURAL MEMBERS — LIVE LOAD DESIGNATION = HS20

MEMBER I.D.	C.P. LOC.	MEMB. CAP. (FT-K)	D.L. EFFECT (FT-K)	AVAL. LL+I (FT-K)		ACT. LL+I (FT-K)	R.F.	S. LD. CAP. (TONS)			ACT. LL+I (FT-K)	R.F.	S. LD. CAP. (TONS)			ACT. LL+I (FT-K)	R.F.	S. LD. CAP. (TONS)	
						INV.					INV. 2		INS2			INV. 3		INS3	
G 1	1.75	~~30615.8~~ 38,833.	14251.9	~~3815.~~ .7372		5363.4	~~525~~ .1.747	~~18.9~~ 62.9.	M		3838.2	~~735~~ 2.442	~~26.4~~ 87.9	M		2878.7	~~870~~ 3.256	~~26.4~~ 87.9	M
						INV. 4		INS4			INV. 5		INS5			INV. 6		INS6	
G 1	1.75					2213.2	~~1.272~~ 4.235	~~25.4~~ 84.7	M		1659.9	~~1.696~~ 5.646	~~25.4~~ 84.7	M		1106.6	~~2.544~~ 8.469	~~25.4~~ 84.7	M

****

RATING TYPE = OPERATING

FDOT Bridge Load Rating Manual

FLEXURAL MEMBERS — LIVE LOAD DESIGNATION = HS20 (36 Tons)

MEMBER I.D.	C.P. LOC.	MEMB. CAP. (FT-K)	D.L. EFFECT (FT-K)	AVAL. LL+I (FT-K)		ACT. LL+I (FT-K)	R.F.	S. LD. CAP. (TONS)			ACT. LL+I (FT-K)	R.F.	S. LD. CAP. (TONS)	
						OPER.					OPER. 2		ST5 (40 Tons)	
G 1	1.75	~~51020.4~~ 38,833.	14251.9	~~4691.~~ 15,620		5363.4	~~.875~~ 2.912	~~31.5~~ 104.8.	M		3960.6	~~1.184~~ 3.944	~~47.4~~ 157.8	M

****

RATING TYPE = POSTING

FLEXURAL MEMBERS — LIVE LOAD DESIGNATION = SU2 (17 Tons) · SU4 (35 Tons) · C4 (36.65 Tons) ·

MEMBER I.D.	C.P. LOC.	MEMB. CAP. (FT-K)	D.L. EFFECT (FT-K)	AVAL. LL+I (FT-K)		ACT. LL+I (FT-K)	R.F.	S. LD. CAP. (TONS)			ACT. LL+I (FT-K)	R.F.	S. LD. CAP. (TONS)			ACT. LL+I (FT-K)	R.F.	S. LD. CAP. (TONS)	
						POST. 1					POST. 2					POST. 3			
G 1	1.75	~~51020.4~~ 38,833.	14251.9	~~4691.~~ 15,620		1862.4	~~2.519~~ .8,387	~~42.8~~ 142.6.	M		3786.2	~~1.239~~ .4.126	~~43.4~~ 144.4.	M		3832.5	~~1.224~~ .4,076	~~44.9~~ 149.4.	M
						POST. 4	SU3 (33 Tons) ·				POST. 5	C3 (28 Tons) ·				POST. 6	C5 (36.60 Tons) Since > 53.3'		
G 1	1.75					3577.4	~~1.311~~ .4.366	~~43.3~~ 144.1.	M		2899.4	~~1.618~~ .5,387	~~45.3~~ 150.8.	M		4173.9	~~1.124~~ .3.742	~~45.0~~ 137.0.	M

****

KEY:

C.P. LOC. = CHECK POINT LOCATION

MEMB. CAP. (FT-K) = MEMBER CAPACITY (FOOT-KIPS)

D.L. EFFECT (FT-K) = DEAD LOAD EFFECT (FOOT-KIPS)

AVAL. LL+I (FT-K) = AVAILABLE LIVE LOAD + IMPACT (FOOT-KIPS)

ACT. LL+I (FT-K) = ACTUAL LIVE LOAD + IMPACT (FOOT-KIPS)

R.F. = RATING FACTOR

S. LD CAP. = SAFE LOAD CAPACITY (TONS)

M = MOMENT
M-V = MOMENT/SHEAR INTERACTION
C = COMPRESSION
S = SERVICEABILITY
V = SHEAR
T = TENSION

DSN: MSE 5/6/98 4.3/23
CHK: 9m 5-7-98

SUMMARY.LIS

1 .COMPOSITE PRESTRESSED CONCRETE N=3N (LFSW (4))

THE RATIO OF 3N (WHERE N = 1.25) IS USED BY DEFAULT.

ANSWER: (YES)

2. PSC TRANSFORMATION OF PRESTRESSING STEEL (LFSW (5))

THE DEFAULT VALUE IS AS(N-1).

ANSWER: (YES)

3. PSC APPLICATION OF LOWER TENDON LIMIT (LFSW (6))

THE DEFAULT VALUE HERE IS 'YES'.

ANSWER: (NO)

4. PSC OVERIDE OF APPLICATION OF LOWER TENDON LIMIT (LFSW (7))

THE DEFAULT VALUE HERE IS 'YES'.

ANSWER: (YES)

5. PSC RELATIVE HUMIDITY, RH

VALUE: (75.00) PERCENT

6.PSC AND CPS EVALUATION OF THREE CRITERIA (LFSW (11))

THE DEFAULT VALUE HERE IS 'NO '.

ANSWER: (NO)

7. PSC CALCULATION OF FCDS (LFSW (13))

4.3/24

ERRSUM.LIS

THE DEFAULT VALUE HERE IS 'YES'.

ANSWER: (YES)

8. PSC MODIFY MU BASED ON CHECK OF REINFORCEMENT INDEX (LFSW (15))

THE DEFAULT VALUE HERE IS 'NO'.

ANSWER: (NO)

9. CPS CALCULATION OF EG/ES (LFSW (16))

THE DEFAULT VALUE HERE IS 'NO '.

ANSWER: (NO)

10. SS AND CSC REDUCTION OF FLANGE FOR B'/T (LFSW (9))

THE DEFAULT VALUE HERE IS 'YES'.

ANSWER: (YES)

11. SS AND CSC HYBRID FLANGE CHECK (LFSW (12))

THE DEFAULT VALUE HERE IS 'YES'.

ANSWER: (NO) We don't have hybrid flange say doesn't matter

MSE
5/6/98

12. TRUSS COMPUTATION OF TENSION CAPACITY (LFSW (14))

THE DEFAULT VALUE HERE IS 'NO '.

ANSWER: (NO)

TABLE J-1

BLOCK DATA NAME	DEFAULT VALUE IN STANDARD VERSION	CUSTOMIZATION OPTIONS	DESCRIPTION
OPCT	(0.75)	0.XXXX (.7500)	OPERATING - PERCENT OF ALLOWABLE STRESS
PPCT	(0.75)	0.XXXX (.7500)	POSTING - PERCENT OF ALLOWABLE STRESS
JPASS	0	X=0 OR 1 (0)	POST ACCORDING TO NPASS CRITERIA -OR- POST ALWAYS (X=1)
NPASS	2	X=1 OR 2 (2)	POST IF RATING DOES NOT PASS INVENTORY LEVEL (X=1) -OR- POST IF RATING DOES NOT PASS OPERATING LEVEL (X=2)
LLD2	0	X=0 OR 1 (0)	PROVIDES ONE LL DISTRIBUTION FACTOR FOR ALL RATING TYPES(X=0) -OR- PROVIDES FOR ONE LL, DISTRIBUTION FACTOR FOR INVENTORY RATING AND ANOTHER FOR ALL OTHER (X=1) RATINGS (2 - CT08'S REQUIRED)
NAMEX	(4HHS20)	XXXX (HS20)	NAME OF SPECIAL VEHICLE FOR OPERATING RATING
NWSWW	0	X=0 OR 1 (0)	USE OLD SECANT FORMULA FOR COMPRESSION MEMBERS (X=0) -OR- USE NEW COMPRESSION FORMULA(X=1)
			EFFECTIVE LENGTH FACTOR K VALUE FOR MEMBERS HAVING LATERAL SUPPORT IN BOTH DIRECTIONS AT ITS ENDS:
PINK	(.875)	.XXXX (.8750)	K VALUE FOR PINNED ENDS IN KL/R TERM
RIVK	(.750)	(.7500)	K VALUE FOR RIVETED ENDS IN KL/R TERM
ESEC	(1.25)	X.XXX (1.210)	RATIO OF THE MODULUS OF ELASTICITY OF PRESTRESSED CONCRETE TO THE MODULUS OF ELASTICITY OF THE COMPOSITE CAST-IN-PLACE SLAB.
BVAR	(6.0)	X.XXXX (8.2500)	"B" VARIABLE CONSTANT IN THE ELASTIC ANALYSIS EQUATION FOR OPERATING RATING ANALYSIS FOR PRESTRESSED CONCRETE MEMBERS

APPENDIX A

YEAR OF CONSTRUCTION - CUSTOM ALLOWABLE BENDING STRESS TABLE
(ALL IN PSI)

MATERIAL	YEAR OF CONSTRUCTION	FY / F'C (PSI)	TYPE OF RATING		
			INVENTORY	OPERATING	POSTING
	XXXX	XXXXX.X	XXXXX.X	XXXXX.X	XXXXX.X
STRUCTURAL STEEL (SS), (CSC)	PRIOR TO (1905)	(26000.0)	(14300.0)	(19500.0)	(19500.0)
	(1906) TO (1936)	(30000.0)	(16500.0)	(22500.0)	(22500.0)
UP TO 10 DIFFERENT VALUES OF DATE AND STRESS AMOUNTS CAN BE SPECIFIED	(1937) TO (1963)	(33000.0)	(18150.0)	(24750.0)	(24750.0)
	(1964) TO (2000)	(36000.0)	(19800.0)	(27000.0)	(27000.0)
	(0) TO (0)	(.0)	(.0)	(.0)	(.0)
	(0) TO (0)	(.0)	(.0)	(.0)	(.0)
	(0) TO (0)	(.0)	(.0)	(.0)	(.0)
	(0) TO (0)	(.0)	(.0)	(.0)	(.0)
	(0) TO (0)	(.0)	(.0)	(.0)	(.0)
	(0) TO (0)	(.0)	(.0)	(.0)	(.0)
REINFORCED STEEL (RC)	PRIOR TO (1954)	(33000.0)	(18000.0)	(25000.0)	(25000.0)
	(1955) TO (1972)	(40000.0)	(20000.0)	(28000.0)	(28000.0)
	(1973) TO (2000)	(60000.0)	(24000.0)	(36000.0)	(36000.0)
	(0) TO (0)	(.0)	(.0)	(.0)	(.0)
	(0) TO (0)	(.0)	(.0)	(.0)	(.0)
	(0) TO (0)	(.0)	(.0)	(.0)	(.0)
	(0) TO (0)	(.0)	(.0)	(.0)	(.0)
	(0) TO (0)	(.0)	(.0)	(.0)	(.0)
	(0) TO (0)	(.0)	(.0)	(.0)	(.0)
	(0) TO (0)	(.0)	(.0)	(.0)	(.0)

APPENDIX A (CONTINUED)

YEAR OF CONSTRUCTION - CUSTOM ALLOWABLE BENDING STRESS TABLE
(ALL IN PSI)

CAST-IN-PLACE CONCRETE (RC), (CSC)	PRIOR (0) TO XXXX (2000)	XXXXX.X (3000.0)	XXXXX.X (1360.0)	XXXXX.X (1870.0)	XXXXX.X (1870.0)
	(0) TO (0)	(.0)	(.0)	(.0)	(.0)
	(0) TO (0)	(.0)	(.0)	(.0)	(.0)
	(0) TO (0)	(.0)	(.0)	(.0)	(.0)
	(0) TO (0)	(.0)	(.0)	(.0)	(.0)
	(0) TO (0)	(.0)	(.0)	(.0)	(.0)
	(0) TO (0)	(.0)	(.0)	(.0)	(.0)
	(0) TO (0)	(.0)	(.0)	(.0)	(.0)
	(0) TO (0)	(.0)	(.0)	(.0)	(.0)
	(0) TO (0)	(.0)	(.0)	(.0)	(.0)

PRESTRESSED CONCRETE (PSC), (CPS)	ALL YEARS	XXXX.XX F"C=(5000.00)
CAST-IN-PLACE SLAB FOR PRESTRESSED CONCRETE (CPS)	ALL YEARS	XXXX.XX F'C=(3500.00)
PRESTRESSING STEEL STRANDS (CPS), (PSC)	ALL YEARS	F'S = (248000.00)

NOTE: THE PRECEDING ALLOWABLE STRESSES ARE APPROXIMATELY THOSE SUGGESTED FOR USE IN THE AASHTO BRIDGE RATING SPECIFICATIONS.

APPENDIX A (CONTINUED)

YEAR OF CONSTRUCTION - CUSTOM ALLOWABLE SHEAR STRESS TABLE
(ALL IN PSI)

MATERIAL	YEAR OF CONSTRUCTION	FY / F'C (PSI)	TYPE OF RATING		
			INVENTORY	OPERATING	POSTING
	XXXX	XXXXX.X	XXXXX.X	XXXXX.X	XXXXX.X
STRUCTURAL STEEL (SS), (CSC)	PRIOR TO (1905)	(26000.0)	(8500.0)	(11500.0)	(11500.0)
	(1906) TO (1936)	(30000.0)	(9500.0)	(13500.0)	(13500.0)
UP TO 10 DIFFERENT VALUES OF DATE AND STRESS AMOUNTS CAN BE SPECIFIED	(1937) TO (1963)	(33000.0)	(11000.0)	(15000.0)	(15000.0)
	(1964) TO (2000)	(36000.0)	(12000.0)	(16000.0)	(16000.0)
	(0) TO (0)	(.0)	(.0)	(.0)	(.0)
	(0) TO (0)	(.0)	(.0)	(.0)	(.0)
	(0) TO (0)	(.0)	(.0)	(.0)	(.0)
	(0) TO (0)	(.0)	(.0)	(.0)	(.0)
	(0) TO (0)	(.0)	(.0)	(.0)	(.0)
	(0) TO (0)	(.0)	(.0)	(.0)	(.0)
REINFORCED STEEL (RC)	PRIOR TO (1954)	(33000.0)	(18000.0)	(25000.0)	(25000.0)
	(1955) TO (1971)	(40000.0)	(20000.0)	(28000.0)	(28000.0)
	(1972) TO (2000)	(60000.0)	(24000.0)	(36000.0)	(36000.0)
	(0) TO (0)	(.0)	(.0)	(.0)	(.0)
	(0) TO (0)	(.0)	(.0)	(.0)	(.0)
	(0) TO (0)	(.0)	(.0)	(.0)	(.0)
	(0) TO (0)	(.0)	(.0)	(.0)	(.0)
	(0) TO (0)	(.0)	(.0)	(.0)	(.0)
	(0) TO (0)	(.0)	(.0)	(.0)	(.0)
	(0) TO (0)	(.0)	(.0)	(.0)	(.0)

NOTE: THE PRECEDING ALLOWABLE STRESSES ARE APPROXIMATELY THOSE SUGGESTED FOR USE IN THE AASHTO BRIDGE RATING SPECIFICATIONS.

APPENDIX A

YEAR OF CONSTRUCTION - CUSTOM ALLOWABLE BENDING STRESS TABLE
(ALL IN PSI)

MATERIAL	YEAR OF CONSTRUCTION	FY / F'C (PSI)	TYPE OF RATING		
			INVENTORY	OPERATING	POSTING
	XXXX	XXXXX.X	XXXXX.X	XXXXX.X	XXXXX.X
TIMBER HORIZONTAL SHEAR STRESS CUSTOM VALUES: (TMB) VALUES:	PRIOR TO (2000)	(90.0)	(90.0)	(120.0)	(120.0)
	(0) TO (0)	(.0)	(.0)	(.0)	(.0)
	(0) TO (0)	(.0)	(.0)	(.0)	(.0)
	(0) TO (0)	(.0)	(.0)	(.0)	(.0)
	(0) TO (0)	(.0)	(.0)	(.0)	(.0)
	(0) TO (0)	(.0)	(.0)	(.0)	(.0)
	(0) TO (0)	(.0)	(.0)	(.0)	(.0)
	(0) TO (0)	(.0)	(.0)	(.0)	(.0)
	(0) TO (0)	(.0)	(.0)	(.0)	(.0)
	(0) TO (0)	(.0)	(.0)	(.0)	(.0)
	XXXX	XXXXX.X	XXXXX.X	XXXXX.X	XXXXX.X
TIMBER BENDING STRESS CUSTOM VALUES:	PRIOR TO (2000)	(1400.0)	(1400.0)	(1860.0)	(1860.0)
	(0) TO (0)	(.0)	(.0)	(.0)	(.0)
	(0) TO (0)	(.0)	(.0)	(.0)	(.0)
	(0) TO (0)	(.0)	(.0)	(.0)	(.0)
	(0) TO (0)	(.0)	(.0)	(.0)	(.0)
	(0) TO (0)	(.0)	(.0)	(.0)	(.0)
	(0) TO (0)	(.0)	(.0)	(.0)	(.0)
	(0) TO (0)	(.0)	(.0)	(.0)	(.0)
	(0) TO (0)	(.0)	(.0)	(.0)	(.0)

APPENDIX A (CONTINUED)

YEAR OF CONSTRUCTION - CUSTOM ALLOWABLE BENDING STRESS TABLE
(ALL IN PSI)

	XXXX	XXXXX.X	XXXXX.X	XXXXX.X	XXXXX.X
CAST-IN-PLACE SLAB FOR COMPOSITE REINFORCED CONCRETE CUSTOM BENDING STRESS VALUES	PRIOR TO (2000)	(3000.0)	(1360.0)	(1870.0)	(1870.0)
	(0) TO (0)	(.0)	(.0)	(.0)	(.0)
	(0) TO (0)	(.0)	(.0)	(.0)	(.0)
	(0) TO (0)	(.0)	(.0)	(.0)	(.0)
	(0) TO (0)	(.0)	(.0)	(.0)	(.0)
	(0) TO (0)	(.0)	(.0)	(.0)	(.0)
	(0) TO (0)	(.0)	(.0)	(.0)	(.0)
	(0) TO (0)	(.0)	(.0)	(.0)	(.0)
	(0) TO (0)	(.0)	(.0)	(.0)	(.0)
	(0) TO (0)	(.0)	(.0)	(.0)	(.0)

NOTE: THE PRECEDING ALLOWABLE STRESSES ARE APPROXIMATELY THOSE SUGGESTED FOR USE IN THE AASHTO BRIDGE RATING SPECIFICATIONS.

TABLE J-2 AND TABLE J-3

ROADWAY WIDTH LATERAL DISTRIBUTION FOR

TRUSSES AND FLOOR BEAMS

MINIMUM DIMENSION "A" (FT)	MINIMUM ROAD WIDTH TO ALLOW TWO VEHICLES ON A BRIDGE (FT)
X.X (1.5)	XX.X XRDWY = (18.0)

STORED AASHTO TRUCK NAMES WITH ASSIGNED LANE LOADS

			XXXX	XXXX		XXXX	XXXX		XXXX	XXXX
HS20	HS15	H20	[H 20]	[H20]	H15	[H 15]	[H15]	H10	[H 10]	[H10]

INVENTORY AND OPERATING
LEGAL LOAD DESCRIPTION TABLE

MAX.20 AXLES	LEGAL LOAD TYPE: INVENTORY NAME: (HS20)		OPERATING NAME: (HS20)	
AXLE NO.	AXLE LOAD (POUNDS)	SPACING (INCH)	AXLE LOAD (POUNDS)	SPACING (INCH)
1	(8000.0)		(8000.0)	
		(168.00)		(168.00)
2	(32000.0)		(32000.0)	
		(336.00)		(336.00)
3	(32000.0)		(32000.0)	
		(.00)		(.00)
4	(.0)		(.0)	
		(.00)		(.00)
5	(.0)		(.0)	
		(.00)		(.00)
6	(.0)		(.0)	
		(.00)		(.00)
7	(.0)		(.0)	
		(.00)		(.00)
8	(.0)		(.0)	
		(.00)		(.00)
9	(.0)		(.0)	
		(.00)		(.00)
10	(.0)		(.0)	
		(.00)		(.00)
11	(.0)		(.0)	
		(.00)		(.00)
12	(.0)		(.0)	
		(.00)		(.00)
13	(.0)		(.0)	
		(.00)		(.00)
14	(.0)		(.0)	
		(.00)		(.00)
15	(.0)		(.0)	
		(.00)		(.00)
16	(.0)		(.0)	
		(.00)		(.00)
17	(.0)		(.0)	
		(.00)		(.00)
18	(.0)		(.0)	
		(.00)		(.00)
19	(.0)		(.0)	
		(.00)		(.00)
20	(.0)		(.0)	

INVENTORY AND OPERATING
TRUCK GROSS WEIGHT (LBS) (SUM OF AXLE LOADS)

	(72000.0)	(72000.0)

Spacings measured from left reaction.
Appears okay since output correct

4.3/32

INVENTORY AND/OR OPERATING LANE LOAD TABLE

INVENTORY LANE LOAD NAME : (HS20)	OPERATING LANE LOAD NAME : (HS20)
UNIFORM LOAD	UNIFORM LOAD
(LBS. PER LINEAR IN. OF LOAD LANE) XX.XXXX = (.0000)	(LBS. PER LINEAR IN. OF LOAD LANE) XX.XXXX = (.0000)
CONCENTRATED LOAD =	CONCENTRATED LOAD =
FOR MOMENT: XXXXXXX.XX (.00) LBS.	FOR MOMENT: XXXXXXX.XX (.00) LBS.
FOR SHEAR: XXXXXXX.XX (.00) LBS.	FOR SHEAR: XXXXXXX.XX (.00) LBS.

53.3333

18,000

26,000

? Output still gives correct HS20 Lane Loading results

4.3/33

CUSTOM
POSTING LEGAL LOAD DESCRIPTION TABLE

MAX.20 AXLES	POSTING LEGAL LOAD VEHICLE TYPES					
	VEHICLE 1		VEHICLE 2		VEHICLE 3	
	NAME: (SU2)		NAME: (SU4)		NAME: (C4)	
AXLE NO.	AXLE LOAD (POUNDS)	SPACING (INCH)	AXLE LOAD (POUNDS)	SPACING (INCH)	AXLE LOAD (POUNDS)	SPACING (INCH)
1	(12000.0)		(13900.0)		(7300.0)	
		(156.00)		(110.00)		(120.00)
2	(22000.0)		(18700.0)		(22000.0)	
		(.00)		(160.00)		(382.00)
3	(.0)		(18700.0)		(22000.0)	
		(.00)		(210.00)		(432.00)
4	(.0)		(18700.0)		(22000.0)	
		(.00)		(.00)		(.00)
5	(.0)		(.0)		(.0)	
		(.00)		(.00)		(.00)
6	(.0)		(.0)		(.0)	
		(.00)		(.00)		(.00)
7	(.0)		(.0)		(.0)	
		(.00)		(.00)		(.00)
8	(.0)		(.0)		(.0)	
		(.00)		(.00)		(.00)
9	(.0)		(.0)		(.0)	
		(.00)		(.00)		(.00)
10	(.0)		(.0)		(.0)	
		(.00)		(.00)		(.00)
11	(.0)		(.0)		(.0)	
		(.00)		(.00)		(.00)
12	(.0)		(.0)		(.0)	
		(.00)		(.00)		(.00)
13	(.0)		(.0)		(.0)	
		(.00)		(.00)		(.00)
14	(.0)		(.0)		(.0)	
		(.00)		(.00)		(.00)
15	(.0)		(.0)		(.0)	
		(.00)		(.00)		(.00)
16	(.0)		(.0)		(.0)	
		(.00)		(.00)		(.00)
17	(.0)		(.0)		(.0)	
		(.00)		(.00)		(.00)
18	(.0)		(.0)		(.0)	
		(.00)		(.00)		(.00)
19	(.0)		(.0)		(.0)	
		(.00)		(.00)		(.00)
20	(.0)		(.0)		(.0)	

TABLE J-4 -- POSTING TRUCK GROSS WEIGHT (POUNDS) (SUM OF AXLE LOADS)

POST	(34000.0)	(70000.0)	(73300.0)

4.3/34

13 CUSTOM LIVE LOAD DESCRIPTIONS TABLE

MAX.20 CUSTOM AXLES	LIVE LOAD TYPE - INVENTORY RATING					
	VEHICLE 1		VEHICLE 2		VEHICLE 3	
	NAME: (INS2)		NAME: (INS3)		NAME: (INS4)	
AXLE NO.	AXLE LOAD (LBS)	SPACING (INCH)	AXLE LOAD (LBS)	SPACING (INCH)	AXLE LOAD (LBS)	SPACING (INCH)
1	(8000.0)		(6000.0)		(8000.0)	
		(168.00)		(168.00)		(168.00)
2	(32000.0)		(24000.0)		(32000.0)	
		(336.00)		(336.00)		(.00)
3	(32000.0)		(24000.0)		(.0)	
		(.00)		(.00)		(.00)
4	(.0)		(.0)		(.0)	
		(.00)		(.00)		(.00)
5	(.0)		(.0)		(.0)	
		(.00)		(.00)		(.00)
6	(.0)		(.0)		(.0)	
		(.00)		(.00)		(.00)
7	(.0)		(.0)		(.0)	
		(.00)		(.00)		(.00)
8	(.0)		(.0)		(.0)	
		(.00)		(.00)		(.00)
9	(.0)		(.0)		(.0)	
		(.00)		(.00)		(.00)
10	(.0)		(.0)		(.0)	
		(.00)		(.00)		(.00)
11	(.0)		(.0)		(.0)	
		(.00)		(.00)		(.00)
12	(.0)		(.0)		(.0)	
		(.00)		(.00)		(.00)
13	(.0)		(.0)		(.0)	
		(.00)		(.00)		(.00)
14	(.0)		(.0)		(.0)	
		(.00)		(.00)		(.00)
15	(.0)		(.0)		(.0)	
		(.00)		(.00)		(.00)
16	(.0)		(.0)		(.0)	
		(.00)		(.00)		(.00)
17	(.0)		(.0)		(.0)	
		(.00)		(.00)		(.00)
18	(.0)		(.0)		(.0)	
		(.00)		(.00)		(.00)
19	(.0)		(.0)		(.0)	
		(.00)		(.00)		(.00)

TABLE J-5 --CUSTOM INVENTORY TRUCK GROSS WEIGHT (POUNDS)

	(72000.0)	(54000.0)	(40000.0)

INVENTORY LANE LOAD TABLE FOR 13 CUSTOM VEHICLES

INVENTORY VEHICLE 1 LANE LOAD NAME: (INS2)	INVENTORY VEHICLE 2 LANE LOAD NAME: (INS3)	INVENTORY VEHICLE 3 LANE LOAD NAME: (INS4)
UNIFORM LOAD	UNIFORM LOAD	UNIFORM LOAD
(LBS. PER LINEAR IN. OF LOAD LANE) XX.XXXX = (.0000)	(LBS. PER LINEAR IN. OF LOAD LANE) XX.XXXX = (.0000)	(LBS. PER LINEAR IN. OF LOAD LANE) XX.XXXX = (.0000)
CONCENTRATED LOAD =	CONCENTRATED LOAD =	CONCENTRATED LOAD =
FOR MOMENT: XXXXXXX.XX (.00) LBS.	FOR MOMENT: XXXXXXX.XX (.00) LBS.	FOR MOMENT: XXXXXXX.XX (.00) LBS.
FOR SHEAR: XXXXXXX.XX (.00) LBS.	FOR SHEAR: XXXXXXX.XX (.00) LBS.	FOR SHEAR: XXXXXXX.XX (.00) LBS.

13 CUSTOM LIVE LOAD DESCRIPTIONS TABLE (CONTINUED)

MAX.20 CUSTOM AXLES	LIVE LOAD TYPE - INVENTORY RATING				OPERATING RATING	
	VEHICLE 4		VEHICLE 5		VEHICLE 6	
	NAME: (INS5)		NAME: (INS6)		NAME: (ST5)	
AXLE NO.	AXLE LOAD (LBS)	SPACING (INCH)	AXLE LOAD (LBS)	SPACING (INCH)	AXLE LOAD (LBS)	SPACING (INCH)
1	(6000.0)		(4000.0)		(8000.0)	
		(168.00)		(168.00)		(324.00)
2	(24000.0)		(16000.0)		(18000.0)	
		(.00)		(.00)		(372.00)
3	(.0)		(.0)		(18000.0)	
		(.00)		(.00)		(516.00)
4	(.0)		(.0)		(18000.0)	
		(.00)		(.00)		(804.00)
5	(.0)		(.0)		(18000.0)	
		(.00)		(.00)		(.00)
6	(.0)		(.0)		(.0)	
		(.00)		(.00)		(.00)
7	(.0)		(.0)		(.0)	
		(.00)		(.00)		(.00)
8	(.0)		(.0)		(.0)	
		(.00)		(.00)		(.00)
9	(.0)		(.0)		(.0)	
		(.00)		(.00)		(.00)
10	(.0)		(.0)		(.0)	
		(.00)		(.00)		(.00)
11	(.0)		(.0)		(.0)	
		(.00)		(.00)		(.00)
12	(.0)		(.0)		(.0)	
		(.00)		(.00)		(.00)
13	(.0)		(.0)		(.0)	
		(.00)		(.00)		(.00)
14	(.0)		(.0)		(.0)	
		(.00)		(.00)		(.00)
15	(.0)		(.0)		(.0)	
		(.00)		(.00)		(.00)
16	(.0)		(.0)		(.0)	
		(.00)		(.00)		(.00)
17	(.0)		(.0)		(.0)	
		(.00)		(.00)		(.00)
18	(.0)		(.0)		(.0)	
		(.00)		(.00)		(.00)
19	(.0)		(.0)		(.0)	
		(.00)		(.00)		(.00)
20	(.0)		(.0)		(.0)	

TABLE J-6 -- CUSTOM INVENTORY & OPERATING TRUCK GROSS WEIGHT (CONTINUED)

	(30000.0)	(20000.0)	(80000.0)

INVENTORY AND/OR OPERATING LANE LOAD TABLE

INVENTORY VEHICLE 4 LANE LOAD NAME: (INS5)	INVENTORY VEHICLE 5 LANE LOAD NAME: (INS6)	OPERATING VEHICLE 6 LANE LOAD NAME: (ST5)
UNIFORM LOAD (LBS. PER LINEAR IN. OF LOAD LANE) XX.XXXX = (.0000) CONCENTRATED LOAD = FOR MOMENT: XXXXXXX.XX (.00) LBS. FOR SHEAR: XXXXXXX.XX (.00) LBS.	UNIFORM LOAD (LBS. PER LINEAR IN. OF LOAD LANE) XX.XXXX = (.0000) CONCENTRATED LOAD = FOR MOMENT: XXXXXXX.XX (.00) LBS. FOR SHEAR: XXXXXXX.XX (.00) LBS.	UNIFORM LOAD (LBS. PER LINEAR IN. OF LOAD LANE) XX.XXXX = (.0000) CONCENTRATED LOAD = FOR MOMENT: XXXXXXX.XX (.00) LBS. FOR SHEAR: XXXXXXX.XX (.00) LBS.

13 CUSTOM LIVE LOAD DESCRIPTIONS TABLE

MAX.20 CUSTOM AXLES	POSTING 1 RATING		POSTING 2 RATING		POSTING 3 RATING	
	VEHICLE 7		VEHICLE 8		VEHICLE 9	
	NAME: (SU3)		NAME: (C3)		NAME: (C5)	
AXLE NO.	AXLE LOAD (LBS)	SPACING (INCH)	AXLE LOAD (LBS)	SPACING (INCH)	AXLE LOAD (LBS)	SPACING (INCH)
1	(22000.0)		(12000.0)		(8000.0)	
2	(22000.0)	(132.00)	(22000.0)	(120.00)	(14000.0)	(120.00)
3	(22000.0)	(182.00)	(22000.0)	(360.00)	(14000.0)	(178.00)
4	(.0)	(.00)	(.0)	(.00)	(22000.0)	(382.00)
5	(.0)	(.00)	(.0)	(.00)	(22000.0)	(432.00)
6	(.0)	(.00)	(.0)	(.00)	(.0)	(.00)
7	(.0)	(.00)	(.0)	(.00)	(.0)	(.00)
8	(.0)	(.00)	(.0)	(.00)	(.0)	(.00)
9	(.0)	(.00)	(.0)	(.00)	(.0)	(.00)
10	(.0)	(.00)	(.0)	(.00)	(.0)	(.00)
11	(.0)	(.00)	(.0)	(.00)	(.0)	(.00)
12	(.0)	(.00)	(.0)	(.00)	(.0)	(.00)
13	(.0)	(.00)	(.0)	(.00)	(.0)	(.00)
14	(.0)	(.00)	(.0)	(.00)	(.0)	(.00)
15	(.0)	(.00)	(.0)	(.00)	(.0)	(.00)
16	(.0)	(.00)	(.0)	(.00)	(.0)	(.00)
17	(.0)	(.00)	(.0)	(.00)	(.0)	(.00)
18	(.0)	(.00)	(.0)	(.00)	(.0)	(.00)
19	(.0)	(.00)	(.0)	(.00)	(.0)	(.00)
20	(.0)	(.00)	(.0)	(.00)	(.0)	(.00)

TABLE J-7 --CUSTOM POSTING TRUCK GROSS WEIGHT (POUNDS) (SUM OF AXLE LOADS)

POST	(66000.0)	(56000.0)	(80000.0)

MAIN -- NEW STRUCTURE I.D.= 001-001

Should be 170"

From FDOT Bridge Load Rating Manual

For Spans >53.3', should be

8,800
16,100
16,100
16,100
16,100
73,200

Say okay since R.F. >>1.0

MSE
5/6/98

4.3/39

```
SRATE1 -- MEMBER I.D.=    G 1

*** WARNING 12400600 ***  STRUCTURE ID  001-001
                          MEMBER ID        G 1
                          THE NON-COMPOSITE DC VALUE FOR A STIFFENED COMPOSITE GIRDER FAILS THE DC/TW
                          CRITERIA ESTABLISHED BY AASHTO 10.49.2 OR 10.49.3.2.  THE BARS SYSTEM WILL
                          AUTOMATICALLY CALCULATE THE COMPOSITE DC VALUE AND RETEST THE AASHTO CRITERIA.
                          (INFORMATIVE)
```

This is okay

```
*** WARNING 12400100 ***  STRUCTURE ID  001-001
                          MEMBER ID        G 1
                          A STIFFENED GIRDER FAILS AT LEAST ONE LOAD FACTOR METHOD ANALYSIS TEST OF
                          DEPTH VS. WEB THICKNESS.  (SEE AASHTO STANDARD SPECIFICATION FOR HIGHWAY
                          BRIDGES, SECTIONS 10.48.5.1, 10.48.6.1, 10.49.2 AND 10.49.3.2 (A) AND (B).
                          (INFORMATIVE)
```

Fails This for Non-Composite, but when using Composite Dc, this is okay.

DETAIL DATA FOR FLEXURAL MEMBER

DATE 01/22/98

NO. SPANS = 1
NOT SYMMETRICAL

D/P STRUCTURE I.D. 001-001
MEMBER I.D.--G01
MATERIAL--CSC
LL DIST. FACT. = 2.182

SPAN NO.	LENGTH FT.	RNG. NO.	LENGTH FT.	SEC.NO. LT	SEC.NO. RT	VAR CODE S T P	VAR CODE T B	DL DUE TO MEM. WEIGHT W(LT) LBS/FT	DL DUE TO MEM. WEIGHT W(RT) LBS/FT
1	242.000	1	60.500	01	01			501.1	501.1
		2	121.000	02	02			673.8	673.8
		3	60.500	03	03			501.1	501.1

SUPERIMPOSED DISTRIBUTED DL(S)
LENGTH DISTRIBUTED**********
DIST. FROM LT SUPPORT***

SPAN NO.	W(LT) LBS/FT	W(RT) LBS/FT	* FT.	* FT.	STIFF TRANS.	LONG.
1	180.0	180.0	.000	245.000	T	
1	223.3	223.3	.000	245.000		

SUPERIMPOSED CONCENTRATED DL(S)
DIST. FROM LT SUPPORT****

SPAN NO.	P KIPS	* FT.

CHECK POINTS RATED--

SPAN NO.	DIS FRM LT SPRT FT.	FUNC M	VL	VR
1	.000	X		X
1	121.000	X	X	X
1	242.000	X	X	
1	60.417	X	X	X
1	181.583	X	X	X

SPAN NO.	DIS FRM LT SPRT FT.	FUNC M	VL	VR

4.3/41

REPORT.11<

DATE 1/22/98

DETAIL DATA AT MOMENT CHECK POINT FOR
COMPOSITE STEEL AND CONCRETE FLEXURAL MEMBER - LOAD FACTOR RATING

BARS-PC RELEASE 5.5

CLR.Tm

D/P STRUCTURE I.D. = 001-001
MEMBER I.D. -- G 1
C.P. LOCATION - 1.00

***** SECTION PROPERTIES IN COMPOSITE RANGE 1 OF SPAN 1 ******

PAGE 1

-- STRUCTURAL STEEL PROPERTIES --

H (IN.)	Tweb (IN.)	H/Tweb	D (IN.)	D/Tweb	- B' (IN) - TOP	BOT	- B'/t - TOP	BOT	Lb (FT) TOP	BOT	Ry (IN) TOP	BOT	- Lb / Ry TOP	BOT	HYBRID RATIO, R +BEND	-BEND
114.88	.69	167.10	112.00	162.91	10.66	12.66	9.47	7.23	CONT	7.50	6.35	7.51	.00	11.99	1.0000	1.0000

-- COMPOSITE CONCRETE PROPERTIES --

EFF.WIDTH (IN.)	EFF.THICK. (IN.)	VALUE N	(AS)C (SQ.IN.)	(DS)C (IN.)	VALUE a	VALUE Y	Atf (SQ.IN.)	Abf (SQ.IN.)	Aw (SQ.IN.)
96.0	8.0	8	4.70	4.00	8.00	25.4	24.75	45.50	77.00

-- SECTION PROPERTIES --

	GROSS AREA SQ.IN.	NET AREA +BEND SQ.IN.	NET AREA -BEND SQ.IN.	IX +BEND IN.**4	IX -BEND IN.**4	C (BOT) IN.	SECTION MODULUS TOP +BEND IN.**3	TOP -BEND IN.**3	BOTT +BEND IN.**3	BOTT -BEND IN.**3	PLASTIC SECTION MODULUS TOP +BEND IN.**3	TOP -BEND+ IN.**3	BOTT +BEND IN.**3	BOTT -BEND IN.**3
NON-COM	147.25	147.25	147.25	297278.9	297278.9	49.68	4559.7	4559.7	5983.6	5983.6	6021.24	6021.24	6021.24	6021.24
COM(N=N)				591379.4	.0	77.73	15920.2	13099.1	7607.8	7607.8				
COM(N=3N)				430253.7	.0	62.37	8193.9	7110.6	6898.3	6898.3				

-- ULTIMATE STRENGTH --

Fy (PSI) STEEL	f'c (PSI) CONC.	Fy (PSI) REBAR	2055/(SQRT Fy) TOP FLANGE	BOT FLANGE	2200/(SQRT Fy) TOP FLANGE	BOT FLANGE
50000.	4500.	60000.	9.19	9.19	9.84	9.84

-- YIELD STRESS, Fy (PSI) --

BOT FLANGE	TOP FLANGE	WEB
50000.	50000.	50000.

***** SECTION QUALIFICATION *****

	STIFFENED LONG	STIFFENED TRANV	UNSTIFFENED	COMPACT	BRACED NON-COMPACT	UNBRACED NON-COMPACT	REDUCTION FACTOR	SYMMETRICAL	UNSYMMETRICAL
+BEND		X			X		1.0000		
-BEND							1.0000		X

Section is COMPACT at COMPOSITE ∴ MU is incorrect
See B6060 output (sheet 4.2.3/17) for correct MU (Typical)

***** SECTION CAPACITY *****

+BEND ML = .00 FT-KIPS, MR = .00 FT-KIPS
-BEND ML = .00 FT-KIPS, MR = .00 FT-KIPS

	--- NON-COMPOSITE MOMENT CAPACITY (FT-KIPS) --- TOP +BEND	TOP -BEND	BOTT +BEND	BOTT -BEND	MU	-- COMPOSITE MOMENT CAPACITY (FT-KIPS) -- MAX. CAP. STEEL	MAX. CAP. CONC.	MU	-- SHEAR CAPACITY (KIPS) -- VU LEFT	VU RIGHT
INV.	30615.83	.00	14630.33	.00	.00	6021.24	11360.57	30615.83	1824.92	.00
OPER.	51026.38	.00	24383.88	.00	.00	6021.24	11360.57	51026.38	1824.92	.00
POST1	51026.38	.00	24383.88	.00	.00	6021.24	11360.57	51026.38	1824.92	.00
POST2	51026.38	.00	24383.88	.00	.00	6021.24	11360.57	51026.38	1824.92	.00
POST3	51026.38	.00	24383.88	.00	.00	6021.24	11360.57	51026.38	1824.92	.00

Capacity of Braced Non-Compact Section

***** MOMENT (FT-KIPS) AND SHEAR (KIPS) *****

-- DEAD LOAD --

M (DL)	M (SDL)	REDIS. M-(DL)	REDIS. M-(SDL)	V (DL)	V (SDL)
.00	.00	.00	.00	262.10	48.80

310.9

MU CAPACITY OF BRACED NON-COMPACT SECTION

4.3/42

DATE 1/22/98

DETAIL DATA AT MOMENT CHECK POINT FOR
COMPOSITE STEEL AND CONCRETE FLEXURAL MEMBER - LOAD FACTOR RATING

D/P STRUCTURE I.D. = 001-001
MEMBER I.D. -- G 1
C.P. LOCATION -- 1.00

***** LIVE LOAD CALCULATIONS (IMPACT FACTOR = .136 FOR +BEND AND = .136 FOR -BEND)

	LIVE LOAD		-- LIVE LOAD -- TRUCK MOMENT REDIS LL+I FT-KIPS	LL+IMP FT-KIPS	LL FT-KIPS	LOC.NO. 1 WHEEL FT.	DIR	LANE MOMENT LL+IMP FT-KIPS	LL FT-KIPS	LOC.CONC. LOAD #1 FT.	LOC.CONC. LOAD #2 FT.	FIXED SHEAR +V KIPS	FIXED SHEAR -V KIPS	MAX SHEAR +V KIPS	MAX SHEAR -V KIPS
INV.	HS20	+BEND	.00	.0	.0	.000	L	.0	.0	.000	.000	.00	.00		
		-BEND	.00	.0	.0	.000	L	.0	.0	.000	.000	.00	.00		
OPER.	HS20	+BEND	.00	.0	.0	181.584	L	.0	.0	.000	.000	.00	.00	.00	128.23
		-BEND	.00	.0	.0	.000	L	.0	.0	.000	.000	.00	.00		
POST 1	SU2	+BEND	.00	.0	.0	181.585	L					.00	.00	.00	128.23
		-BEND	.00	.0	.0	.000	L					.00	.00		
POST 2	SU4	+BEND	.00	.0	.0	181.584	L					.00	.00	.00	41.35
		-BEND	.00	.0	.0	.000	L					.00	.00		
POST 3	C4	+BEND	.00	.0	.0	181.584	L					.00	.00	.00	84.33
		-BEND	.00	.0	.0	.000	L					.00	.00		
														.00	86.12

***** ORDINATES OF AND AREAS UNDER MOMENT INFLUENCE LINE (CONTINUOUS SPAN) *****

	SPAN 0	SPAN 1	SPAN 2	SPAN 3	SPAN 4	SPAN 5
T 0	.000	.000	.000	.000	.000	.000
E 1	.000	.000	.000	.000	.000	.000
N 2	.000	.000	.000	.000	.000	.000
T 3	.000	.000	.000	.000	.000	.000
H 4	.000	.000	.000	.000	.000	.000
5	.000	.000	.000	.000	.000	.000
P 6	.000	.000	.000	.000	.000	.000
O 7	.000	.000	.000	.000	.000	.000
I 8	.000	.000	.000	.000	.000	.000
N 9	.000	.000	.000	.000	.000	.000
T 0	.000	.000	.000	.000	.000	.000

***** MOMENT INFLUENCE LINE (SIMPLE SPAN)

X-DIST (FT.)	.00	.00	242.00	POS AREA =	.00
Y-ORDINATE	.00	.00	.00		

4.3/43

DATE 1/22/98

DETAIL DATA AT MOMENT CHECK POINT FOR
COMPOSITE STEEL AND CONCRETE FLEXURAL MEMBER - LOAD FACTOR RATING

D/P STRUCTURE I.D. = 001-001
MEMBER I.D. -- G 1
C.P. LOCATION -- 1.00

***** RATING FACTOR *****

-- RATING FACTOR FOR MOMENT --

		AVAILABLE (LL+I) CAPACITY (FT-KIPS) TOP +BEND	TOP -BEND	BOTT +BEND	BOTT -BEND	RATING FACTOR - MOMENT TOP +BEND	TOP -BEND	BOTT +BEND	BOTT -BEND	RATING VALUE	SAFE LOAD CAP. (TONS)
INV.	HS20	30615.8	.0	14630.3	.0	999.0000	999.0000	999.0000	999.0000		
OPER.	HS20	51026.4	.0	24383.9	.0	999.0000	999.0000	999.0000	999.0000		
POST 1	SU2	51026.4	.0	24383.9	.0	999.0000	999.0000	999.0000	999.0000		
POST 2	SU4	51026.4	.0	24383.9	.0	999.0000	999.0000	999.0000	999.0000		
POST 3	C4	51026.4	.0	24383.9	.0	999.0000	999.0000	999.0000	999.0000		

-- RATING FACTOR FOR SERVICEABILITY --

		AVAILABLE (LL+I) CAPACITY (FT-KIPS) TOP +BEND	TOP -BEND	BOTT +BEND	BOTT -BEND	RATING FACTOR -SERVICEABILITY TOP +BEND	TOP -BEND	BOTT +BEND	BOTT -BEND	RATING VALUE	SAFE LOAD CAP. (TONS)
INV.	HS20	37810.5	.0	18068.5	.0	999.0000	999.0000	999.0000	999.0000		
OPER.	HS20	63017.6	.0	30114.1	.0	999.0000	999.0000	999.0000	999.0000		
POST 1	SU2	63017.6	.0	30114.1	.0	999.0000	999.0000	999.0000	999.0000		
POST 2	SU4	63017.6	.0	30114.1	.0	999.0000	999.0000	999.0000	999.0000		
POST 3	C4	63017.6	.0	30114.1	.0	999.0000	999.0000	999.0000	999.0000		

-- RATING FACTOR FOR SHEAR --

		AVAILABLE CAPACITY (KIPS) LEFT	RIGHT	RATING FACTOR - SHEAR LEFT	RIGHT	RATING VALUE	SAFE LOAD
INV.	HS20	.00	655.73	5.1138	5.1138	HS102.3	184.1
OPER.	HS20	.00	1092.88	8.5229	8.5229	HS170.5	306.8
POST 1	SU2	.00	1092.88	26.4309	26.4309		449.3
POST 2	SU4	.00	1092.88	12.9594	12.9594		453.6
POST 3	C4	.00	1092.88	12.6902	12.6902		465.1

4.3/44

DATE 1/22/98

DETAIL DATA AT MOMENT CHECK POINT FOR
COMPOSITE STEEL AND CONCRETE FLEXURAL MEMBER - LOAD FACTOR RATING

BARS-PC RELEASE 5.5

D/P STRUCTURE I.D. = 001-001
MEMBER I.D. -- G 1
C.P. LOCATION - 1.25

***** SECTION PROPERTIES IN COMPOSITE RANGE 1 OF SPAN 1 ******

-- STRUCTURAL STEEL PROPERTIES --

H (IN.)	Tweb (IN.)	H/Tweb	D (IN.)	D/Tweb	- B' (IN) - TOP	BOT	- B'/t - TOP	BOT	Lb (FT) TOP	BOT	Ry (IN) TOP	BOT	- Lb / Ry TOP	BOT	HYBRID RATIO, R +BEND	-BEND
114.88	.69	167.10	112.00	162.91	10.66	12.66	9.47	7.23	CONT	23.75	6.35	7.51	.00	37.97	1.0000	1.0000

-- COMPOSITE CONCRETE PROPERTIES --

EFF.WIDTH (IN.)	EFF.THICK. (IN.)	VALUE N	(AS)C (SQ.IN.)	(DS)C (IN.)	VALUE a	VALUE Y	Atf (SQ.IN.)	Abf (SQ.IN.)	Aw (SQ.IN.)
96.0	8.0	8	4.70	4.00	8.00	25.4	24.75	45.50	77.00

-- SECTION PROPERTIES --

	GROSS AREA SQ.IN.	NET AREA +BEND SQ.IN.	NET AREA -BEND SQ.IN.	IX +BEND IN.**4	IX -BEND IN.**4	C (BOT) IN.	SECTION MODULUS TOP +BEND IN.**3	TOP -BEND IN.**3	BOTT +BEND IN.**3	BOTT -BEND IN.**3	PLASTIC SECTION MODULUS TOP +BEND IN.**3	TOP -BEND+ IN.**3	BOTT +BEND IN.**3	BOTT -BEND IN.**3
NON-COM	147.25	147.25	147.25	297278.9	297278.9	49.68	4559.7	4559.7	5983.6	5983.6	6021.24	6021.24	6021.24	6021.24
COM(N=N)				591379.4	.0	77.73	15920.2	13099.1	7607.8	7607.8				
COM(N=3N)				430253.7	.0	62.37	8193.9	7110.6	6898.3	6898.3				

-- ULTIMATE STRENGTH --

Fy (PSI) STEEL	f'c (PSI) CONC.	Fy (PSI) REBAR	2055/(SQRT Fy) TOP FLANGE	BOT FLANGE	2200/(SQRT Fy) TOP FLANGE	BOT FLANGE	-- YIELD STRESS, Fy (PSI) -- BOT FLANGE	TOP FLANGE	WEB
50000.	4500.	60000.	9.19	9.19	9.84	9.84	50000.	50000.	50000.

***** SECTION QUALIFICATION *****

	STIFFENED LONG	STIFFENED TRANV	UNSTIFFENED	COMPACT	BRACED NON-COMPACT	UNBRACED NON-COMPACT	REDUCTION FACTOR	SYMMETRICAL	UNSYMMETRICAL
+BEND		X					1.0000		
-BEND					X		1.0000		X

***** SECTION CAPACITY *****

+BEND ML = .00 FT-KIPS, MR = .00 FT-KIPS
-BEND ML = .00 FT-KIPS, MR = .00 FT-KIPS

	--- NON-COMPOSITE MOMENT CAPACITY (FT-KIPS) --- TOP +BEND	TOP -BEND	BOTT +BEND	BOTT -BEND	MU	-- COMPOSITE MOMENT CAPACITY (FT-KIPS) -- MAX. CAP. STEEL	MAX. CAP. CONC.	MU	-- SHEAR CAPACITY (KIPS) -- VU LEFT	VU RIGHT
INV.	30615.83	.00	14630.33	.00	.00	6021.24	11360.57	30615.83	1008.56	.00
OPER.	51026.38	.00	24383.88	.00	.00	6021.24	11360.57	51026.38	1008.56	.00
POST1	51026.38	.00	24383.88	.00	.00	6021.24	11360.57	51026.38	1008.56	.00
POST2	51026.38	.00	24383.88	.00	.00	6021.24	11360.57	51026.38	1008.56	.00
POST3	51026.38	.00	24383.88	.00	.00	6021.24	11360.57	51026.38	1008.56	.00

***** MOMENT (FT-KIPS) AND SHEAR (KIPS) *****

-- DEAD LOAD --

M (DL)	M (SDL)	REDIS. M-(DL)	REDIS. M-(SDL)	V (DL)	V (SDL)
12039.66	2212.23	.00	.00	136.45	24.43

PER B6060 DATED 156.5' ✓OK

4.3/45

DATE 1/22/98

DETAIL DATA AT MOMENT CHECK POINT FOR
COMPOSITE STEEL AND CONCRETE FLEXURAL MEMBER - LOAD FACTOR RATING

D/P STRUCTURE I.D. = 001-001
MEMBER I.D. -- G 1
C.P. LOCATION -- 41.25

***** LIVE LOAD CALCULATIONS (IMPACT FACTOR = .136 FOR +BEND AND = .136 FOR -BEND)

-- LIVE LOAD --

	LIVE LOAD		TRUCK MOMENT REDIS LL+I FT-KIPS	TRUCK MOMENT LL+IMP FT-KIPS	TRUCK MOMENT LL FT-KIPS	TRUCK MOMENT LOC.NO. 1 WHEEL FT.	DIR	LANE MOMENT LL+IMP FT-KIPS	LANE MOMENT LL FT-KIPS	LANE MOMENT LOC.CONC. LOAD #1 FT.	LANE MOMENT LOC.CONC. LOAD #2 FT.	FIXED SHEAR +V KIPS	FIXED SHEAR -V KIPS	MAX SHEAR +V KIPS	MAX SHEAR -V KIPS
INV.	HS20	+BEND	.00	3838.2	3378.0	88.417	R	*5363.4	*4720.3	60.417	.000	64.81	42.49		
		-BEND	.00	.0	.0	.000	L	.0	.0	.000	.000	48.06	.00		
OPER.	HS20	+BEND	.00	3838.2	3378.0	88.417	R	5363.4	4720.3	60.417	.000	64.81	42.49	87.42	80.08
		-BEND	.00	.0	.0	.000	L	.0	.0	.000	.000	48.06	.00		
POST 1	SU2	+BEND	.00	1862.4	1639.1	73.417	R							87.42	80.08
		-BEND	.00	.0	.0	.000	L					30.83	3.55		
												1.47	.00		
POST 2	SU4	+BEND	.00	3786.2	3332.2	77.917	R							34.45	31.55
		-BEND	.00	.0	.0	.000	L					62.67	39.49		
												3.83	.00		
POST 3	C4	+BEND	.00	3832.5	3373.0	96.417	R							70.03	64.15
		-BEND	.00	.0	.0	.000	L					63.43	36.16		
												8.77	.00		
														70.88	64.93

***** ORDINATES OF AND AREAS UNDER MOMENT INFLUENCE LINE (CONTINUOUS SPAN) *****

	SPAN 0	SPAN 1	SPAN 2	SPAN 3	SPAN 4	SPAN 5
T 0	.000	.000	.000	.000	.000	.000
E 1	.000	.000	.000	.000	.000	.000
N 2	.000	.000	.000	.000	.000	.000
T 3	.000	.000	.000	.000	.000	.000
H 4	.000	.000	.000	.000	.000	.000
5	.000	.000	.000	.000	.000	.000
P 6	.000	.000	.000	.000	.000	.000
O 7	.000	.000	.000	.000	.000	.000
I 8	.000	.000	.000	.000	.000	.000
N 9	.000	.000	.000	.000	.000	.000
T 0	.000	.000	.000	.000	.000	.000

***** MOMENT INFLUENCE LINE (SIMPLE SPAN)

X-DIST (FT.)	.00	60.50	242.00	POS AREA = 5485.33
Y-ORDINATE	.00	45.33	.00	

F. 3/46

DETAIL DATA AT MOMENT CHECK POINT FOR
COMPOSITE STEEL AND CONCRETE FLEXURAL MEMBER - LOAD FACTOR RATING

DATE 1/22/98

D/P STRUCTURE I.D. = 001-001
MEMBER I.D. -- G 1
C.P. LOCATION -- 1.25

***** RATING FACTOR *****

-- RATING FACTOR FOR MOMENT --

		AVAILABLE (LL+I) CAPACITY (FT-KIPS)				RATING FACTOR - MOMENT				RATING VALUE	SAFE LOAD CAP. (TONS)
		TOP +BEND	TOP -BEND	BOTT +BEND	BOTT -BEND	TOP +BEND	TOP -BEND	BOTT +BEND	BOTT -BEND		
INV.	HS20	2814.7	.0	3981.8	.0	.5248	999.0000	.7424	999.0000	HS 10.5	18.9
OPER.	HS20	4691.2	.0	6636.4	.0	.8747	999.0000	1.2373	999.0000	HS 17.5	31.5
POST 1	SU2	4691.2	.0	6636.4	.0	2.5189	999.0000	3.5633	999.0000		42.8
POST 2	SU4	4691.2	.0	6636.4	.0	1.2390	999.0000	1.7528	999.0000		43.4
POST 3	C4	4691.2	.0	6636.4	.0	1.2241	999.0000	1.7316	999.0000		44.9

BARS M_u Capacity Incorrect. See 4.3/23

-- RATING FACTOR FOR SERVICEABILITY --

		AVAILABLE (LL+I) CAPACITY (FT-KIPS)				RATING FACTOR -SERVICEABILITY				RATING VALUE	SAFE LOAD CAP. (TONS)
		TOP +BEND	TOP -BEND	BOTT +BEND	BOTT -BEND	TOP +BEND	TOP -BEND	BOTT +BEND	BOTT -BEND		
INV.	HS20	10009.5	.0	7420.0	.0	1.8662	999.0000	1.3834	999.0000		
OPER.	HS20	16682.4	.0	12366.6	.0	3.1104	999.0000	2.3057	999.0000		
POST 1	SU2	16682.4	.0	12366.6	.0	8.9574	999.0000	6.6401	999.0000		
POST 2	SU4	16682.4	.0	12366.6	.0	4.4062	999.0000	3.2663	999.0000		
POST 3	C4	16682.4	.0	12366.6	.0	4.3529	999.0000	3.2268	999.0000		

-- RATING FACTOR FOR SHEAR --

		AVAILABLE CAPACITY (KIPS)		RATING FACTOR - SHEAR		RATING VALUE	SAFE LOAD
		LEFT	RIGHT	LEFT	RIGHT		
INV.	HS20	368.96	368.96	4.2206	4.2206		
OPER.	HS20	614.94	614.94	7.0344	7.0344		
POST 1	SU2	614.94	614.94	17.8522	17.8522		
POST 2	SU4	614.94	614.94	8.7815	8.7815		
POST 3	C4	614.94	614.94	8.6753	8.6753		

4.3/47

DATE 1/22/98

DETAIL DATA AT MOMENT CHECK POINT FOR
COMPOSITE STEEL AND CONCRETE FLEXURAL MEMBER - LOAD FACTOR RATING

BARS-PC RELEASE 5.5

D/P STRUCTURE I.D. = 001-001
MEMBER I.D. -- G 1
C.P. LOCATION - 1.50

***** SECTION PROPERTIES IN COMPOSITE RANGE 2 OF SPAN 1 ******

-- STRUCTURAL STEEL PROPERTIES --

H (IN.)	Tweb (IN.)	H/Tweb	D (IN.)	D/Tweb	- B' (IN) - TOP	BOT	- B'/t - TOP	BOT	Lb (FT) TOP	BOT	Ry (IN) TOP	BOT	- Lb / Ry TOP	BOT	HYBRID RATIO, R +BEND	-BEND
117.00	.69	170.18	112.00	162.91	10.66	12.66	4.74	4.60	CONT	25.00	6.35	7.51	.00	39.97	1.0000	1.0000

-- COMPOSITE CONCRETE PROPERTIES --

EFF.WIDTH (IN.)	EFF.THICK. (IN.)	VALUE N	(AS)C (SQ.IN.)	(DS)C (IN.)	VALUE a	VALUE Y	Atf (SQ.IN.)	Abf (SQ.IN.)	Aw (SQ.IN.)
96.0	8.0	8	4.70	4.00	8.00	27.4	49.50	71.50	77.00

-- SECTION PROPERTIES --

	GROSS AREA SQ.IN.	NET AREA +BEND SQ.IN.	NET AREA -BEND SQ.IN.	IX +BEND IN.**4	IX -BEND IN.**4	C (BOT) IN.	SECTION MODULUS TOP +BEND IN.**3	TOP -BEND IN.**3	BOTT +BEND IN.**3	BOTT -BEND IN.**3	PLASTIC SECTION MODULUS TOP +BEND IN.**3	TOP -BEND+ IN.**3	BOTT +BEND IN.**3	BOTT -BEND IN.**3
NON-COM	198.00	198.00	198.00	469284.5	469284.5	52.31	7254.8	7254.8	8970.6	8970.6	8973.13	8973.13	8973.13	8973.13
COM(N=N)				781514.3	.0	74.99	18601.6	15626.2	10422.0	10422.0				
COM(N=3N)				602274.1	.0	61.97	10945.4	9556.0	9718.1	9718.1				

-- ULTIMATE STRENGTH --

Fy (PSI) STEEL	f'c (PSI) CONC.	Fy (PSI) REBAR	2055/(SQRT Fy) TOP FLANGE	BOT FLANGE	2200/(SQRT Fy) TOP FLANGE	BOT FLANGE	-- YIELD STRESS, Fy (PSI) -- BOT FLANGE	TOP FLANGE	WEB
50000.	4500.	60000.	9.19	9.19	9.84	9.84	50000.	50000.	50000.

***** SECTION QUALIFICATION *****

	STIFFENED LONG	STIFFENED TRANV	UNSTIFFENED	COMPACT	BRACED NON-COMPACT	UNBRACED NON-COMPACT	REDUCTION FACTOR	SYMMETRICAL	UNSYMMETRICAL
+BEND		X			X		1.0000		
-BEND							1.0000		X

***** SECTION CAPACITY *****

+BEND ML = .00 FT-KIPS, MR = .00 FT-KIPS
-BEND ML = .00 FT-KIPS, MR = .00 FT-KIPS

	--- NON-COMPOSITE MOMENT CAPACITY (FT-KIPS) --- TOP +BEND	TOP -BEND	BOTT +BEND	BOTT -BEND	MU	-- COMPOSITE MOMENT CAPACITY (FT-KIPS) -- MAX. CAP. STEEL	MAX. CAP. CONC.	MU	-- SHEAR CAPACITY (KIPS) -- VU LEFT	VU RIGHT
INV.	35772.39	.00	20042.36	.00	.00	8973.13	11346.86	35772.39	1445.06	.00
OPER.	59620.65	.00	33403.92	.00	.00	8973.13	11346.86	59620.65	1445.06	.00
POST1	59620.65	.00	33403.92	.00	.00	8973.13	11346.86	59620.65	1445.06	.00
POST2	59620.65	.00	33403.92	.00	.00	8973.13	11346.86	59620.65	1445.06	.00
POST3	59620.65	.00	33403.92	.00	.00	8973.13	11346.86	59620.65	1445.06	.00

***** MOMENT (FT-KIPS) AND SHEAR (KIPS) *****

-- DEAD LOAD --

M (DL)	M (SDL)	REDIS. M-(DL)	REDIS. M-(SDL)	V (DL)	V (SDL)
16173.38	2952.36	.00	.00	.00	.00

4.3/48

DETAIL DATA AT MOMENT CHECK POINT FOR
COMPOSITE STEEL AND CONCRETE FLEXURAL MEMBER - LOAD FACTOR RATING

DATE 1/22/98

D/P STRUCTURE I.D. = 001-001
MEMBER I.D. -- G 1
C.P. LOCATION -- [illegible]

***** LIVE LOAD CALCULATIONS (IMPACT FACTOR = .136 FOR +BEND AND = .136 FOR -BEND)

-- LIVE LOAD --

LIVE LOAD			TRUCK MOMENT REDIS LL+I FT-KIPS	TRUCK MOMENT LL+IMP FT-KIPS	TRUCK MOMENT LL FT-KIPS	TRUCK MOMENT LOC.NO. 1 WHEEL FT.	DIR	LANE MOMENT LL+IMP FT-KIPS	LANE MOMENT LL FT-KIPS	LANE MOMENT LOC.CONC. LOAD #1 FT.	LANE MOMENT LOC.CONC. LOAD #2 FT.	FIXED SHEAR +V KIPS	FIXED SHEAR -V KIPS	MAX SHEAR +V KIPS	MAX SHEAR -V KIPS
INV.	HS20	+BEND	.00	5052.8	4446.9	107.000	L	7157.8	6299.6	121.000	.000	11.16	11.16		
		-BEND	.00	.0	.0	.000	L	.0	.0	.000	.000	.00	.00		
OPER.	HS20	+BEND	.00	5052.8	4446.9	107.000	L	7157.8	6299.6	121.000	.000	11.16	11.16	43.61	43.61
		-BEND	.00	.0	.0	.000	L	.0	.0	.000	.000	.00	.00		
POST 1	SU2	+BEND	.00	2453.2	2159.1	108.000	L					7.00	-20.27	43.61	43.61
		-BEND	.00	.0	.0	.000	L					1.47	.00		
POST 2	SU4	+BEND	.00	5038.4	4434.3	107.667	L					3.92	-19.26	21.47	21.47
		-BEND	.00	.0	.0	.000	L					3.83	.00		
POST 3	C4	+BEND	.00	4998.8	4399.4	89.167	L					12.29	-14.98	43.36	43.36
		-BEND	.00	.0	.0	.000	L					8.77	.00		
														43.09	43.09

***** ORDINATES OF AND AREAS UNDER MOMENT INFLUENCE LINE (CONTINUOUS SPAN) *****

	SPAN 0	SPAN 1	SPAN 2	SPAN 3	SPAN 4	SPAN 5
T 0	.000	.000	.000	.000	.000	.000
E 1	.000	.000	.000	.000	.000	.000
N 2	.000	.000	.000	.000	.000	.000
T 3	.000	.000	.000	.000	.000	.000
H 4	.000	.000	.000	.000	.000	.000
5	.000	.000	.000	.000	.000	.000
P 6	.000	.000	.000	.000	.000	.000
O 7	.000	.000	.000	.000	.000	.000
I 8	.000	.000	.000	.000	.000	.000
N 9	.000	.000	.000	.000	.000	.000
T 0	.000	.000	.000	.000	.000	.000

***** MOMENT INFLUENCE LINE (SIMPLE SPAN)

X-DIST (FT.)	.00	121.00	242.00	POS AREA = 7320.50
Y-ORDINATE	.00	60.50	.00	

4.3/49

DETAIL DATA AT MOMENT CHECK POINT FOR
COMPOSITE STEEL AND CONCRETE FLEXURAL MEMBER - LOAD FACTOR RATING

DATE 1/22/98

D/P STRUCTURE I.D. = 001-001
MEMBER I.D. -- G1
C.P. LOCATION -- 1.50

***** RATING FACTOR *****

-- RATING FACTOR FOR MOMENT --

		AVAILABLE (LL+I) CAPACITY (FT-KIPS) TOP +BEND	TOP -BEND	BOTT +BEND	BOTT -BEND	RATING FACTOR - MOMENT TOP +BEND	TOP -BEND	BOTT +BEND	BOTT -BEND	RATING VALUE	SAFE LOAD CAP. (TONS)
INV.	HS20	7880.2	.0	6868.5	.0	1.1009	999.0000	.9596	999.0000	HS 19.2	34.5
OPER.	HS20	13133.7	.0	11447.5	.0	1.8349	999.0000	1.5993	999.0000	HS 32.0	57.6
POST 1	SU2	13133.7	.0	11447.5	.0	5.3536	999.0000	4.6663	999.0000		79.3
POST 2	SU4	13133.7	.0	11447.5	.0	2.6067	999.0000	2.2720	999.0000		79.5
POST 3	C4	13133.7	.0	11447.5	.0	2.6274	999.0000	2.2900	999.0000		83.9

BARS Mu Capacity Incorrect. This location doesn't control.

-- RATING FACTOR FOR SERVICEABILITY --

		AVAILABLE (LL+I) CAPACITY (FT-KIPS) TOP +BEND	TOP -BEND	BOTT +BEND	BOTT -BEND	RATING FACTOR -SERVICEABILITY TOP +BEND	TOP -BEND	BOTT +BEND	BOTT -BEND	RATING VALUE	SAFE LOAD CAP. (TONS)
INV.	HS20	16286.7	.0	11578.4	.0	2.2754	999.0000	1.6176	999.0000		
OPER.	HS20	27144.5	.0	19297.4	.0	3.7923	999.0000	2.6960	999.0000		
POST 1	SU2	27144.5	.0	19297.4	.0	11.0648	999.0000	7.8661	999.0000		
POST 2	SU4	27144.5	.0	19297.4	.0	5.3875	999.0000	3.8301	999.0000		
POST 3	C4	27144.5	.0	19297.4	.0	5.4302	999.0000	3.8604	999.0000		

-- RATING FACTOR FOR SHEAR --

		AVAILABLE CAPACITY (KIPS) LEFT	RIGHT	RATING FACTOR - SHEAR LEFT	RIGHT	RATING VALUE	SAFE LOAD
INV.	HS20	666.95	666.95	15.2923	15.2923		
OPER.	HS20	1111.59	1111.59	25.4872	25.4872		
POST 1	SU2	1111.59	1111.59	51.7728	51.7728		
POST 2	SU4	1111.59	1111.59	25.6370	25.6370		
POST 3	C4	1111.59	1111.59	25.7990	25.7990		

4.3/50

DETAIL DATA AT MOMENT CHECK POINT FOR
COMPOSITE STEEL AND CONCRETE FLEXURAL MEMBER - LOAD FACTOR RATING

BARS-PC RELEASE 5.5

DATE 1/22/98

D/P STRUCTURE I.D. = 001-001
MEMBER I.D. -- G 1
C.P. LOCATION - 1.75

***** SECTION PROPERTIES IN COMPOSITE RANGE 3 OF SPAN 1 ******

-- STRUCTURAL STEEL PROPERTIES --

H (IN.)	Tweb (IN.)	H/Tweb	D (IN.)	D/Tweb	- B' (IN) - TOP	BOT	- B'/t - TOP	BOT	Lb (FT) TOP	BOT	Ry (IN) TOP	BOT	- Lb / Ry TOP	BOT	HYBRID RATIO, R +BEND	-BEND
114.88	.69	167.10	112.00	162.91	10.66	12.66	9.47	7.23	CONT	23.75	6.35	7.51	.00	37.97	1.0000	1.0000

-- COMPOSITE CONCRETE PROPERTIES --

EFF.WIDTH (IN.)	EFF.THICK. (IN.)	VALUE N	(AS)C (SQ.IN.)	(DS)C (IN.)	VALUE a	VALUE Y	Atf (SQ.IN.)	Abf (SQ.IN.)	Aw (SQ.IN.)
96.0	8.0	8	4.70	4.00	8.00	25.4	24.75	45.50	77.00

-- SECTION PROPERTIES --

	GROSS AREA SQ.IN.	NET AREA +BEND SQ.IN.	NET AREA -BEND SQ.IN.	IX +BEND IN.**4	IX -BEND IN.**4	C (BOT) IN.	SECTION MODULUS TOP +BEND IN.**3	TOP -BEND IN.**3	BOTT +BEND IN.**3	BOTT -BEND IN.**3	PLASTIC SECTION MODULUS TOP +BEND IN.**3	TOP -BEND+ IN.**3	BOTT +BEND IN.**3	BOTT -BEND IN.**3
NON-COM	147.25	147.25	147.25	297278.9	297278.9	49.68	4559.7	4559.7	5983.6	5983.6	6021.24	6021.24	6021.24	6021.24
COM(N=N)				591379.4	.0	77.73	15920.2	13099.1	7607.8	7607.8				
COM(N=3N)				430253.7	.0	62.37	8193.9	7110.6	6898.3	6898.3				

-- ULTIMATE STRENGTH --

Fy (PSI) STEEL	f'c (PSI) CONC.	Fy (PSI) REBAR	2055/(SQRT Fy) TOP FLANGE	BOT FLANGE	2200/(SQRT Fy) TOP FLANGE	BOT FLANGE	-- YIELD STRESS, Fy (PSI) -- BOT FLANGE	TOP FLANGE	WEB
50000.	4500.	60000.	9.19	9.19	9.84	9.84	50000.	50000.	50000.

***** SECTION QUALIFICATION *****

	STIFFENED LONG	STIFFENED TRANV	UNSTIFFENED	COMPACT	BRACED NON-COMPACT	UNBRACED NON-COMPACT	REDUCTION FACTOR	SYMMETRICAL	UNSYMMETRICAL
+BEND		X			X		1.0000		
-BEND							1.0000		X

***** SECTION CAPACITY *****

+BEND ML = .00 FT-KIPS, MR = .00 FT-KIPS
-BEND ML = .00 FT-KIPS, MR = .00 FT-KIPS

	--- NON-COMPOSITE MOMENT CAPACITY (FT-KIPS) --- TOP +BEND	TOP -BEND	BOTT +BEND	BOTT -BEND	MU	-- COMPOSITE MOMENT CAPACITY (FT-KIPS) -- MAX. CAP. STEEL	MAX. CAP. CONC.	MU	-- SHEAR CAPACITY (KIPS) -- VU LEFT	VU RIGHT
INV.	30615.83	.00	14630.33	.00	.00	6021.24	11360.57	30615.83	1008.56	.00
OPER.	51026.38	.00	24383.88	.00	.00	6021.24	11360.57	51026.38	1008.56	.00
POST1	51026.38	.00	24383.88	.00	.00	6021.24	11360.57	51026.38	1008.56	.00
POST2	51026.38	.00	24383.88	.00	.00	6021.24	11360.57	51026.38	1008.56	.00
POST3	51026.38	.00	24383.88	.00	.00	6021.24	11360.57	51026.38	1008.56	.00

***** MOMENT (FT-KIPS) AND SHEAR (KIPS) *****

-- DEAD LOAD --

M (DL)	M (SDL)	REDIS. M-(DL)	REDIS. M-(SDL)	V (DL)	V (SDL)
12039.67	2212.23	12039.67	2212.23	-136.45	-24.43

4.3/51

DETAIL DATA AT MOMENT CHECK POINT FOR
COMPOSITE STEEL AND CONCRETE FLEXURAL MEMBER - LOAD FACTOR RATING

DATE 1/22/98

D/P STRUCTURE I.D. = 001-001
MEMBER I.D. -- G 1
C.P. LOCATION -- 1.75

***** LIVE LOAD CALCULATIONS (IMPACT FACTOR = .136 FOR +BEND AND = .136 FOR -BEND)

-- LIVE LOAD --

LIVE LOAD			TRUCK MOMENT REDIS LL+I FT-KIPS	TRUCK MOMENT LL+IMP FT-KIPS	TRUCK MOMENT LL FT-KIPS	TRUCK MOMENT LOC.NO. 1 WHEEL FT.	TRUCK MOMENT DIR	LANE MOMENT LL+IMP FT-KIPS	LANE MOMENT LL FT-KIPS	LANE MOMENT LOC.CONC. LOAD #1 FT.	LANE MOMENT LOC.CONC. LOAD #2 FT.	FIXED SHEAR +V KIPS	FIXED SHEAR -V KIPS	MAX SHEAR +V KIPS	MAX SHEAR -V KIPS
INV.	HS20	+BEND	.00	3838.2	3378.0	153.583	L	5363.4	4720.3	181.583	.000	42.49	64.81		
		-BEND	.00	.0	.0	.000	L	.0	.0	.000	.000	48.06	.00		
														80.08	87.42
OPER.	HS20	+BEND	.00	3838.2	3378.0	153.583	L	5363.4	4720.3	181.583	.000	42.49	64.81		
		-BEND	.00	.0	.0	.000	L	.0	.0	.000	.000	48.06	.00		
														80.08	87.42
POST 1	SU2	+BEND	.00	1862.4	1639.1	168.583	L					-3.55	-30.83		
		-BEND	.00	.0	.0	.000	L					1.47	.00		
														31.55	34.45
POST 2	SU4	+BEND	.00	3786.2	3332.2	164.083	L					-39.49	-62.67		
		-BEND	.00	.0	.0	.000	L					3.83	.00		
														64.15	70.03
POST 3	C4	+BEND	.00	3832.5	3373.0	145.583	L					-36.16	-63.43		
		-BEND	.00	.0	.0	.000	L					8.77	.00		
														64.93	70.88

***** ORDINATES OF AND AREAS UNDER MOMENT INFLUENCE LINE (CONTINUOUS SPAN) *****

	SPAN 0	SPAN 1	SPAN 2	SPAN 3	SPAN 4	SPAN 5
T 0	.000	.000	.000	.000	.000	.000
E 1	.000	.000	.000	.000	.000	.000
N 2	.000	.000	.000	.000	.000	.000
T 3	.000	.000	.000	.000	.000	.000
H 4	.000	.000	.000	.000	.000	.000
5	.000	.000	.000	.000	.000	.000
P 6	.000	.000	.000	.000	.000	.000
O 7	.000	.000	.000	.000	.000	.000
I 8	.000	.000	.000	.000	.000	.000
N 9	.000	.000	.000	.000	.000	.000
T 0	.000	.000	.000	.000	.000	.000

***** MOMENT INFLUENCE LINE (SIMPLE SPAN)

X-DIST (FT.)	.00	181.50	242.00	POS AREA = 5485.33
Y-ORDINATE	.00	45.33	.00	

4.3/52

DETAIL DATA AT MOMENT CHECK POINT FOR
COMPOSITE STEEL AND CONCRETE FLEXURAL MEMBER - LOAD FACTOR RATING

DATE 1/22/98

D/P STRUCTURE I.D. = 001-001
MEMBER I.D. -- G 1
C.P. LOCATION -- 1.75

***** RATING FACTOR *****

-- RATING FACTOR FOR MOMENT --

		AVAILABLE (LL+I) CAPACITY (FT-KIPS)				RATING FACTOR - MOMENT				RATING VALUE	SAFE LOAD CAP. (TONS)
		TOP +BEND	TOP -BEND	BOTT +BEND	BOTT -BEND	TOP +BEND	TOP -BEND	BOTT +BEND	BOTT -BEND		
INV.	HS20	2814.7	.0	3981.8	.0	.5248	999.0000	.7424	999.0000	HS 10.5	18.9
OPER.	HS20	4691.2	.0	6636.4	.0	.8747	999.0000	1.2373	999.0000	HS 17.5	31.5
POST 1	SU2	4691.2	.0	6636.4	.0	2.5189	999.0000	3.5633	999.0000		42.8
POST 2	SU4	4691.2	.0	6636.4	.0	1.2390	999.0000	1.7528	999.0000		43.4
POST 3	C4	4691.2	.0	6636.4	.0	1.2241	999.0000	1.7316	999.0000		44.9

BARS Mu Capacity Incorrect. See 4.3/23

-- RATING FACTOR FOR SERVICEABILITY --

		AVAILABLE (LL+I) CAPACITY (FT-KIPS)				RATING FACTOR -SERVICEABILITY				RATING VALUE	SAFE LOAD CAP. (TONS)
		TOP +BEND	TOP -BEND	BOTT +BEND	BOTT -BEND	TOP +BEND	TOP -BEND	BOTT +BEND	BOTT -BEND		
INV.	HS20	10009.5	.0	7420.0	.0	1.8662	999.0000	1.3834	999.0000		
OPER.	HS20	16682.4	.0	12366.6	.0	3.1104	999.0000	2.3057	999.0000		
POST 1	SU2	16682.4	.0	12366.6	.0	8.9574	999.0000	6.6401	999.0000		
POST 2	SU4	16682.4	.0	12366.6	.0	4.4062	999.0000	3.2663	999.0000		
POST 3	C4	16682.4	.0	12366.6	.0	4.3529	999.0000	3.2268	999.0000		

-- RATING FACTOR FOR SHEAR --

		AVAILABLE CAPACITY (KIPS)		RATING FACTOR - SHEAR		RATING VALUE	SAFE LOAD
		LEFT	RIGHT	LEFT	RIGHT		
INV.	HS20	368.96	368.96	4.2206	4.2206		
OPER.	HS20	614.94	614.94	7.0344	7.0344		
POST 1	SU2	614.94	614.94	17.8522	17.8522		
POST 2	SU4	614.94	614.94	8.7815	8.7815		
POST 3	C4	614.94	614.94	8.6753	8.6753		

4.3/53

DETAIL DATA AT MOMENT CHECK POINT FOR
COMPOSITE STEEL AND CONCRETE FLEXURAL MEMBER - LOAD FACTOR RATING

BARS-PC RELEASE 5.5

DATE 1/22/98

D/P STRUCTURE I.D. = 001-001
MEMBER I.D. -- G 1
C.P. LOCATION - 2.00

***** SECTION PROPERTIES IN COMPOSITE RANGE 3 OF SPAN 1 ******

-- STRUCTURAL STEEL PROPERTIES --

H (IN.)	Tweb (IN.)	H/Tweb	D (IN.)	D/Tweb	- B' (IN) - TOP	BOT	- B'/t - TOP	BOT	Lb (FT) TOP	BOT	Ry (IN) TOP	BOT	- Lb / Ry TOP	BOT	HYBRID RATIO, R +BEND	-BEND
114.88	.69	167.10	112.00	162.91	10.66	12.66	9.47	7.23	CONT	7.50	6.35	7.51	.00	11.99	1.0000	1.0000

-- COMPOSITE CONCRETE PROPERTIES --

EFF.WIDTH (IN.)	EFF.THICK. (IN.)	VALUE N	(AS)C (SQ.IN.)	(DS)C (IN.)	VALUE a	VALUE Y	Atf (SQ.IN.)	Abf (SQ.IN.)	Aw (SQ.IN.)
96.0	8.0	8	4.70	4.00	8.00	25.4	24.75	45.50	77.00

-- SECTION PROPERTIES --

	GROSS AREA SQ.IN.	NET AREA +BEND SQ.IN.	NET AREA -BEND SQ.IN.	IX +BEND IN.**4	IX -BEND IN.**4	C (BOT) IN.	SECTION MODULUS TOP +BEND IN.**3	TOP -BEND IN.**3	BOTT +BEND IN.**3	BOTT -BEND IN.**3	PLASTIC SECTION MODULUS TOP +BEND IN.**3	TOP -BEND+ IN.**3	BOTT +BEND IN.**3	BOTT -BEND IN.**3
NON-COM	147.25	147.25	147.25	297278.9	297278.9	49.68	4559.7	4559.7	5983.6	5983.6	6021.24	6021.24	6021.24	6021.24
COM(N=N)				591379.4	.0	77.73	15920.2	13099.1	7607.8	7607.8				
COM(N=3N)				430253.7	.0	62.37	8193.9	7110.6	6898.3	6898.3				

-- ULTIMATE STRENGTH --

Fy (PSI) STEEL	f'c (PSI) CONC.	Fy (PSI) REBAR	2055/(SQRT Fy) TOP FLANGE	BOT FLANGE	2200/(SQRT Fy) TOP FLANGE	BOT FLANGE	-- YIELD STRESS, Fy (PSI) -- BOT FLANGE	TOP FLANGE	WEB
50000.	4500.	60000.	9.19	9.19	9.84	9.84	50000.	50000.	50000.

***** SECTION QUALIFICATION *****

	STIFFENED LONG	STIFFENED TRANV	UNSTIFFENED	COMPACT	BRACED NON-COMPACT	UNBRACED NON-COMPACT	REDUCTION FACTOR	SYMMETRICAL	UNSYMMETRICAL
+BEND		X			X		1.0000		
-BEND							1.0000		X

***** SECTION CAPACITY *****

+BEND ML = .00 FT-KIPS, MR = .00 FT-KIPS
-BEND ML = .00 FT-KIPS, MR = .00 FT-KIPS

	--- NON-COMPOSITE MOMENT CAPACITY (FT-KIPS) --- TOP +BEND	TOP -BEND	BOTT +BEND	BOTT -BEND	MU	-- COMPOSITE MOMENT CAPACITY (FT-KIPS) -- MAX. CAP. STEEL	MAX. CAP. CONC.	MU	-- SHEAR CAPACITY (KIPS) -- VU LEFT	VU RIGHT
INV.	30615.83	.00	14630.33	.00	.00	6021.24	11360.57	30615.83	1824.92	.00
OPER.	51026.38	.00	24383.88	.00	.00	6021.24	11360.57	51026.38	1824.92	.00
POST1	51026.38	.00	24383.88	.00	.00	6021.24	11360.57	51026.38	1824.92	.00
POST2	51026.38	.00	24383.88	.00	.00	6021.24	11360.57	51026.38	1824.92	.00
POST3	51026.38	.00	24383.88	.00	.00	6021.24	11360.57	51026.38	1824.92	.00

***** MOMENT (FT-KIPS) AND SHEAR (KIPS) *****

-- DEAD LOAD --

M (DL)	M (SDL)	REDIS. M-(DL)	REDIS. M-(SDL)	V (DL)	V (SDL)
.00	.00	.00	.00	-262.10	-48.80

DETAIL DATA AT MOMENT CHECK POINT FOR
COMPOSITE STEEL AND CONCRETE FLEXURAL MEMBER - LOAD FACTOR RATING

DATE 1/22/98

D/P STRUCTURE I.D. = 001-001
MEMBER I.D. -- G 1
C.P. LOCATION -- 2.00

***** LIVE LOAD CALCULATIONS (IMPACT FACTOR = .136 FOR +BEND AND = .136 FOR -BEND)

-- LIVE LOAD --

LIVE LOAD			TRUCK MOMENT REDIS LL+I FT-KIPS	TRUCK MOMENT LL+IMP FT-KIPS	TRUCK MOMENT LL FT-KIPS	TRUCK MOMENT LOC.NO. 1 WHEEL FT.	DIR	LANE MOMENT LL+IMP FT-KIPS	LANE MOMENT LL FT-KIPS	LANE MOMENT LOC.CONC. LOAD #1 FT.	LANE MOMENT LOC.CONC. LOAD #2 FT.	FIXED SHEAR +V KIPS	FIXED SHEAR -V KIPS	MAX SHEAR +V KIPS	MAX SHEAR -V KIPS
INV.	HS20	+BEND	.00	.0	.0	153.583	L	.0	.0	.000	.000	63.53	63.53		
		-BEND	.00	.0	.0	.000	L	.0	.0	.000	.000	16.80	.00	128.23	146.71
OPER.	HS20	+BEND	.00	.0	.0	153.583	L	.0	.0	.000	.000	63.53	63.53		
		-BEND	.00	.0	.0	.000	L	.0	.0	.000	.000	16.80	.00	128.23	146.71
POST 1	SU2	+BEND	.00	.0	.0	168.583	L					-30.83	-30.83		
		-BEND	.00	.0	.0	.000	L					16.34	.00	41.35	47.31
POST 2	SU4	+BEND	.00	.0	.0	164.083	L					-62.67	-62.67		
		-BEND	.00	.0	.0	.000	L					21.06	.00	84.33	96.49
POST 3	C4	+BEND	.00	.0	.0	145.583	L					-63.43	-63.43		
		-BEND	.00	.0	.0	.000	L					17.82	.00	86.12	98.53

***** ORDINATES OF AND AREAS UNDER MOMENT INFLUENCE LINE (CONTINUOUS SPAN) *****

	SPAN 0	SPAN 1	SPAN 2	SPAN 3	SPAN 4	SPAN 5
T 0	.000	.000	.000	.000	.000	.000
E 1	.000	.000	.000	.000	.000	.000
N 2	.000	.000	.000	.000	.000	.000
T 3	.000	.000	.000	.000	.000	.000
H 4	.000	.000	.000	.000	.000	.000
5	.000	.000	.000	.000	.000	.000
P 6	.000	.000	.000	.000	.000	.000
O 7	.000	.000	.000	.000	.000	.000
I 8	.000	.000	.000	.000	.000	.000
N 9	.000	.000	.000	.000	.000	.000
T 0	.000	.000	.000	.000	.000	.000

***** MOMENT INFLUENCE LINE (SIMPLE SPAN)

X-DIST (FT.)	.00	242.00	242.00	POS AREA = .00
Y-ORDINATE	.00	.00	.00	

4.3/55

DETAIL DATA AT MOMENT CHECK POINT FOR
COMPOSITE STEEL AND CONCRETE FLEXURAL MEMBER - LOAD FACTOR RATING

DATE 1/22/98

D/P STRUCTURE I.D. = 001-001
MEMBER I.D. -- G 1
C.P. LOCATION -- .00

***** RATING FACTOR *****

-- RATING FACTOR FOR MOMENT --

		AVAILABLE (LL+I) CAPACITY (FT-KIPS)				RATING FACTOR - MOMENT				RATING VALUE	SAFE LOAD CAP. (TONS)
		TOP +BEND	TOP -BEND	BOTT +BEND	BOTT -BEND	TOP +BEND	TOP -BEND	BOTT +BEND	BOTT -BEND		
INV.	HS20	30615.8	.0	14630.3	.0	999.0000	999.0000	999.0000	999.0000		
OPER.	HS20	51026.4	.0	24383.9	.0	999.0000	999.0000	999.0000	999.0000		
POST 1	SU2	51026.4	.0	24383.9	.0	999.0000	999.0000	999.0000	999.0000		
POST 2	SU4	51026.4	.0	24383.9	.0	999.0000	999.0000	999.0000	999.0000		
POST 3	C4	51026.4	.0	24383.9	.0	999.0000	999.0000	999.0000	999.0000		

-- RATING FACTOR FOR SERVICEABILITY --

		AVAILABLE (LL+I) CAPACITY (FT-KIPS)				RATING FACTOR -SERVICEABILITY				RATING VALUE	SAFE LOAD CAP. (TONS)
		TOP +BEND	TOP -BEND	BOTT +BEND	BOTT -BEND	TOP +BEND	TOP -BEND	BOTT +BEND	BOTT -BEND		
INV.	HS20	37810.5	.0	18068.5	.0	999.0000	999.0000	999.0000	999.0000		
OPER.	HS20	63017.6	.0	30114.1	.0	999.0000	999.0000	999.0000	999.0000		
POST 1	SU2	63017.6	.0	30114.1	.0	999.0000	999.0000	999.0000	999.0000		
POST 2	SU4	63017.6	.0	30114.1	.0	999.0000	999.0000	999.0000	999.0000		
POST 3	C4	63017.6	.0	30114.1	.0	999.0000	999.0000	999.0000	999.0000		

-- RATING FACTOR FOR SHEAR --

		AVAILABLE CAPACITY (KIPS)		RATING FACTOR - SHEAR		RATING VALUE	SAFE LOAD
		LEFT	RIGHT	LEFT	RIGHT		
INV.	HS20	655.73	.00	4.4696	4.4696	HS 89.4	160.9
OPER.	HS20	1092.88	.00	7.4493	7.4493	HS149.0	268.2
POST 1	SU2	1092.88	.00	23.1014	23.1014		392.7
POST 2	SU4	1092.88	.00	11.3269	11.3269		396.4
POST 3	C4	1092.88	.00	11.0917	11.0917		406.5

4.3/56

DATE 1/22/98

SUMMARY OF SHEAR ANALYSIS

D/P STRUCTURE I.D. 001-001

MEMB. ID	MATL	SPAN NO.	DIS FRM LT SPRT FT.	L R	DL SHEAR KIPS	SDL SHEAR KIPS	---INVENTORY---- LL+I MAX.V KIPS	T L	LL+I MIN.V KIPS	T L	---OPERATING---- LL+I MAX.V KIPS	T L	LL+I MIN.V KIPS	T L	--VEH. LL+I MAX.V KIPS	1 -- LL+I MIN.V KIPS	--VEH. LL+I MAX.V KIPS	2 -- LL+I MIN.V KIPS	--VEH. LL+I MAX.V KIPS	3 -- LL+I MIN.V KIPS	--SPECIAL--- LL+I MAX.V KIPS	LL+I MIN.V KIPS
G 1	CSC	1	.000	L	262.1	48.8	128.2	L	.0	T	128.2	L	.0	T	41.3	.0	84.3	.0	86.1	.0	.0	.0
		1	60.417	L	136.4	24.4	87.4	L	21.1	T	87.4	L	21.1	T	34.4	10.9	70.0	21.5	70.9	20.0	.0	.0
		1	121.000	L	.0	.0	43.6	T	43.6	T	43.6	T	43.6	T	21.5	21.5	43.4	43.4	43.1	43.1	.0	.0
		1	181.583	L	136.4	24.4	21.1	T	87.4	L	21.1	T	87.4	L	10.9	34.4	21.5	70.0	20.0	70.9	.0	.0
		1	242.000	L	262.1	48.8	.0	T	146.7	L	.0	T	146.7	L	.0	47.3	.0	96.5	.0	98.5	.0	.0

4.3/57

DATE 1/22/98

LIVE LOAD DATA AT MOMENT CHECK POINT FOR
COMPOSITE STEEL AND CONCRETE FLEXURAL MEMBER - LOAD FACTOR RATING

D/P STRUCTURE I.D. = 001-001
MEMBER I.D. -- G 1
C.P. LOCATION -- 1.00

***** LIVE LOAD CALCULATIONS (IMPACT FACTOR = .136 FOR +BEND AND = .136 FOR -BEND)

-- LIVE LOAD --

LIVE LOAD		REDIS LL+I FT-KIPS	TRUCK MOMENT LL+IMP FT-KIPS	TRUCK MOMENT LL FT-KIPS	LOC.NO. 1 WHEEL FT.	DIR	LANE MOMENT LL+IMP FT-KIPS	LANE MOMENT LL FT-KIPS	LOC.CONC. LOAD #1 FT.	LOC.CONC. LOAD #2 FT.	FIXED SHEAR +V KIPS	FIXED SHEAR -V KIPS	SHEAR LEFT KIPS	SHEAR RIGHT KIPS
INV. HS20	+BEND	.00	.0	.0	.000	L	.0	.0	.000	.000	.00	.00	.00	128.23
	-BEND	.00	.0	.0	.000	L	.0	.0	.000	.000	.00	.00		
INV. 2 INS2	+BEND	.00	.0	.0	181.584	L	.0	.0	.000	.000	.00	.00	.00	85.81
	-BEND	.00	.0	.0	.000	L	.0	.0	.000	.000	.00	.00		
INV. 3 INS3	+BEND	.00	.0	.0	181.584	L	.0	.0	.000	.000	.00	.00	.00	64.36
	-BEND	.00	.0	.0	.000	L	.0	.0	.000	.000	.00	.00		
INV. 4 INS4	+BEND	.00	.0	.0	181.584	L	.0	.0	.000	.000	.00	.00	.00	49.01
	-BEND	.00	.0	.0	.000	L	.0	.0	.000	.000	.00	.00		
INV. 5 INS5	+BEND	.00	.0	.0	181.584	L	.0	.0	.000	.000	.00	.00	.00	36.76
	-BEND	.00	.0	.0	.000	L	.0	.0	.000	.000	.00	.00		
INV. 6 INS6	+BEND	.00	.0	.0	181.584	L	.0	.0	.000	.000	.00	.00	.00	24.51
	-BEND	.00	.0	.0	.000	L	.0	.0	.000	.000	.00	.00		
OPER HS20	+BEND	.00	.0	.0	181.584	L	.0	.0	.000	.000	.00	.00	.00	128.23
	-BEND	.00	.0	.0	.000	L	.0	.0	.000	.000	.00	.00		
OPER 2 ST5	+BEND	.00	.0	.0	181.584	L	.0	.0	.000	.000	.00	.00	.00	86.68
	-BEND	.00	.0	.0	.000	L	.0	.0	.000	.000	.00	.00		
POST 1 SU2	+BEND	.00	.0	.0	181.585	L					.00	.00	.00	41.35
	-BEND	.00	.0	.0	.000	L					.00	.00		
POST 4 SU3	+BEND	.00	.0	.0	181.584	L					.00	.00	.00	79.64
	-BEND	.00	.0	.0	.000	L					.00	.00		
POST 2 SU4	+BEND	.00	.0	.0	181.584	L					.00	.00	.00	84.33
	-BEND	.00	.0	.0	.000	L					.00	.00		
POST 5 C3	+BEND	.00	.0	.0	181.584	L					.00	.00	.00	65.32
	-BEND	.00	.0	.0	.000	L					.00	.00		
POST 3 C4	+BEND	.00	.0	.0	181.584	L					.00	.00	.00	86.12
	-BEND	.00	.0	.0	.000	L					.00	.00		
POST 6 C5	+BEND	.00	.0	.0	181.584	L					.00	.00	.00	93.84
	-BEND	.00	.0	.0	.000	L					.00	.00		

4.3/58

NVTRK.LIS

LIVE LOAD DATA AT MOMENT CHECK POINT FOR
COMPOSITE STEEL AND CONCRETE FLEXURAL MEMBER - LOAD FACTOR RATING

DATE 1/22/98

D/P STRUCTURE I.D. = 001-001
MEMBER I.D. -- G 1
C.P. LOCATION -- 4.00

***** RATING FACTOR *****

		-- RATING FACTOR FOR -- MOMENT				-- RATING FACTOR FOR -- SERVICEABILITY				-- RATING FACTOR FOR -- SHEAR			
		TOP		BOTT		TOP		BOTT				RATING	SAFE
		+BEND	-BEND	+BEND	-BEND	+BEND	-BEND	+BEND	-BEND	LEFT	RIGHT	VALUE	LOAD CAP.(TONS)
INV.	HS20	999.000	999.000	999.000	999.000	999.000	999.000	999.000	999.000	5.114	5.114	HS102.3	184.1
INV. 2	INS2	999.000	999.000	999.000	999.000	999.000	999.000	999.000	999.000	999.000	7.641	.0	275.1
INV. 3	INS3	999.000	999.000	999.000	999.000	999.000	999.000	999.000	999.000	999.000	10.189	.0	275.1
INV. 4	INS4	999.000	999.000	999.000	999.000	999.000	999.000	999.000	999.000	999.000	13.379	.0	267.6
INV. 5	INS5	999.000	999.000	999.000	999.000	999.000	999.000	999.000	999.000	999.000	17.839	.0	267.6
INV. 6	INS6	999.000	999.000	999.000	999.000	999.000	999.000	999.000	999.000	999.000	26.758	.0	267.6
OPER	HS20	999.000	999.000	999.000	999.000	999.000	999.000	999.000	999.000	8.523	8.523	HS170.5	306.8
OPER 2	ST5	999.000	999.000	999.000	999.000	999.000	999.000	999.000	999.000	999.000	12.608	.0	504.3
POST 1	SU2	999.000	999.000	999.000	999.000	999.000	999.000	999.000	999.000	26.431	26.431		449.3
POST 4	SU3	999.000	999.000	999.000	999.000	999.000	999.000	999.000	999.000	999.000	13.723		452.9
POST 2	SU4	999.000	999.000	999.000	999.000	999.000	999.000	999.000	999.000	12.959	12.959		453.6
POST 5	C3	999.000	999.000	999.000	999.000	999.000	999.000	999.000	999.000	999.000	16.731		468.5
POST 3	C4	999.000	999.000	999.000	999.000	999.000	999.000	999.000	999.000	12.690	12.690		465.1
POST 6	C5	999.000	999.000	999.000	999.000	999.000	999.000	999.000	999.000	999.000	11.646		465.8

4.3/59

DATE 1/22/98

LIVE LOAD DATA AT MOMENT CHECK POINT FOR
COMPOSITE STEEL AND CONCRETE FLEXURAL MEMBER - LOAD FACTOR RATING

D/P STRUCTURE I.D. = 001-001
MEMBER I.D. -- G 1
C.P. LOCATION -- 1.25

***** LIVE LOAD CALCULATIONS (IMPACT FACTOR = .136 FOR +BEND AND = .136 FOR -BEND)

LIVE LOAD			-- LIVE LOAD -- TRUCK MOMENT REDIS LL+I FT-KIPS	LL+IMP FT-KIPS	LL FT-KIPS	LOC.NO. 1 WHEEL FT.	DIR	LANE MOMENT LL+IMP FT-KIPS	LL FT-KIPS	LOC.CONC. LOAD #1 FT.	LOC.CONC. LOAD #2 FT.	FIXED SHEAR +V KIPS	-V KIPS	SHEAR LEFT KIPS	RIGHT KIPS
INV.	HS20	+BEND	.00	3838.2	3378.0	88.417	R	5363.4	4720.3	60.417	.000	64.81	42.49	87.42	80.08
		-BEND	.00	.0	.0	.000	L	.0	.0	.000	.000	48.06	.00		
INV. 2	INS2	+BEND	.00	3838.2	3378.0	88.417	R	.0	.0	.000	.000	63.53	23.86	70.99	65.03
		-BEND	.00	.0	.0	.000	L	.0	.0	.000	.000	-6.88	.00		
INV. 3	INS3	+BEND	.00	2878.7	2533.5	88.417	R	.0	.0	.000	.000	47.65	17.90	53.24	48.77
		-BEND	.00	.0	.0	.000	L	.0	.0	.000	.000	-5.16	.00		
INV. 4	INS4	+BEND	.00	2213.2	1947.8	74.417	R	.0	.0	.000	.000	36.63	-3.04	40.93	37.50
		-BEND	.00	.0	.0	.000	L	.0	.0	.000	.000	-2.29	.00		
INV. 5	INS5	+BEND	.00	1659.9	1460.9	74.417	R	.0	.0	.000	.000	27.47	-2.28	30.70	28.12
		-BEND	.00	.0	.0	.000	L	.0	.0	.000	.000	-1.72	.00		
INV. 6	INS6	+BEND	.00	1106.6	973.9	74.417	R	.0	.0	.000	.000	18.32	-1.52	20.47	18.75
		-BEND	.00	.0	.0	.000	L	.0	.0	.000	.000	-1.15	.00		
OPER	HS20	+BEND	.00	3838.2	3378.0	88.417	R	5363.4	4720.3	60.417	.000	64.81	42.49	87.42	80.08
		-BEND	.00	.0	.0	.000	L	.0	.0	.000	.000	48.06	.00		
OPER 2	ST5	+BEND	.00	3960.6	3485.7	33.417	R	.0	.0	.000	.000	60.07	37.76	69.78	63.92
		-BEND	.00	.0	.0	.000	L	.0	.0	.000	.000	6.82	.00		
POST 1	SU2	+BEND	.00	1862.4	1639.1	73.417	R					30.83	3.55	34.45	31.55
		-BEND	.00	.0	.0	.000	L					-1.47	.00		
POST 4	SU3	+BEND	.00	3577.4	3148.4	75.583	R					59.21	31.94	66.16	60.61
		-BEND	.00	.0	.0	.000	L					-2.95	.00		
POST 2	SU4	+BEND	.00	3786.2	3332.2	77.917	R					62.67	39.49	70.03	64.15
		-BEND	.00	.0	.0	.000	L					-3.83	.00		
POST 5	C3	+BEND	.00	2899.4	2551.8	90.417	R					47.99	20.72	53.63	49.12
		-BEND	.00	.0	.0	.000	L					-4.51	.00		
POST 3	C4	+BEND	.00	3832.5	3373.0	96.417	R					63.43	36.16	70.88	64.93
		-BEND	.00	.0	.0	.000	L					-8.77	.00		
POST 6	C5	+BEND	.00	4173.9	3673.4	96.417	R					69.09	41.81	77.20	70.72
		-BEND	.00	.0	.0	.000	L					-9.43	.00		

4.3/60

DATE 1/22/98

LIVE LOAD DATA AT MOMENT CHECK POINT FOR
COMPOSITE STEEL AND CONCRETE FLEXURAL MEMBER - LOAD FACTOR RATING

D/P STRUCTURE I.D. = 001-001
MEMBER I.D. -- G 1
C.P. LOCATION -- 1.25

***** RATING FACTOR *****

		-- RATING FACTOR FOR -- MOMENT				-- RATING FACTOR FOR -- SERVICEABILITY				-- RATING FACTOR FOR -- SHEAR		RATING VALUE	SAFE LOAD CAP. (TONS)
		TOP		BOTT		TOP		BOTT					
		+BEND	-BEND	+BEND	-BEND	+BEND	-BEND	+BEND	-BEND	LEFT	RIGHT		
INV.	HS20	.525	999.000	.742	999.000	1.866	999.000	1.383	999.000	4.221	4.221	HS 10.5	18.9
INV. 2	INS2	.733	999.000	1.037	999.000	2.608	999.000	1.933	999.000	5.197	5.197	.0	26.4
INV. 3	INS3	.978	999.000	1.383	999.000	3.477	999.000	2.578	999.000	6.930	6.930	.0	26.4
INV. 4	INS4	1.272	999.000	1.799	999.000	4.523	999.000	3.353	999.000	9.014	9.014	.0	25.4
INV. 5	INS5	1.696	999.000	2.399	999.000	6.030	999.000	4.470	999.000	12.018	12.018	.0	25.4
INV. 6	INS6	2.544	999.000	3.598	999.000	9.045	999.000	6.705	999.000	18.027	18.027	.0	25.4
OPER	HS20	.875	999.000	1.237	999.000	3.110	999.000	2.306	999.000	7.034	7.034	HS 17.5	31.5
OPER 2	ST5	1.184	999.000	1.676	999.000	4.212	999.000	3.122	999.000	8.813	8.813	.0	47.4
POST 1	SU2	2.519	999.000	3.563	999.000	8.957	999.000	6.640	999.000	17.852	17.852		42.8
POST 4	SU3	1.311	999.000	1.855	999.000	4.663	999.000	3.457	999.000	9.294	9.294		43.3
POST 2	SU4	1.239	999.000	1.753	999.000	4.406	999.000	3.266	999.000	8.782	8.782		43.4
POST 5	C3	1.618	999.000	2.289	999.000	5.754	999.000	4.265	999.000	11.467	11.467		45.3
POST 3	C4	1.224	999.000	1.732	999.000	4.353	999.000	3.227	999.000	8.675	8.675		44.9
POST 6	C5	1.124	999.000	1.590	999.000	3.997	999.000	2.963	999.000	7.966	7.966		45.0

BARS M_u Capacity Incorrect.

See 4.3/23

4.3/61

DATE 1/22/98

LIVE LOAD DATA AT MOMENT CHECK POINT FOR
COMPOSITE STEEL AND CONCRETE FLEXURAL MEMBER - LOAD FACTOR RATING

D/P STRUCTURE I.D. = 001-001
MEMBER I.D. -- G 1
C.P. LOCATION -- [redacted]

***** LIVE LOAD CALCULATIONS (IMPACT FACTOR = .136 FOR +BEND AND = .136 FOR -BEND)

-- LIVE LOAD --

LIVE LOAD		TRUCK MOMENT REDIS LL+I FT-KIPS	TRUCK MOMENT LL+IMP FT-KIPS	TRUCK MOMENT LL FT-KIPS	TRUCK MOMENT LOC.NO. 1 WHEEL FT.	DIR	LANE MOMENT LL+IMP FT-KIPS	LANE MOMENT LL FT-KIPS	LANE MOMENT LOC.CONC. LOAD #1 FT.	LANE MOMENT LOC.CONC. LOAD #2 FT.	FIXED SHEAR +V KIPS	FIXED SHEAR -V KIPS	SHEAR LEFT KIPS	SHEAR RIGHT KIPS
INV. HS20	+BEND	.00	5052.8	4446.9	107.000	L	7157.8	6299.6	121.000	.000	11.16	-11.16	43.61	43.61
	-BEND	.00	.0	.0	.000	L	.0	.0	.000	.000	.00	.00		
INV. 2 INS2	+BEND	.00	5052.8	4446.9	107.000	L	.0	.0	.000	.000	32.99	-6.68	43.61	43.61
	-BEND	.00	.0	.0	.000	L	.0	.0	.000	.000	-6.88	.00		
INV. 3 INS3	+BEND	.00	3789.6	3335.2	107.000	L	.0	.0	.000	.000	24.74	-5.01	32.71	32.71
	-BEND	.00	.0	.0	.000	L	.0	.0	.000	.000	-5.16	.00		
INV. 4 INS4	+BEND	.00	2930.5	2579.1	107.000	L	.0	.0	.000	.000	15.45	-24.22	25.65	25.65
	-BEND	.00	.0	.0	.000	L	.0	.0	.000	.000	-2.29	.00		
INV. 5 INS5	+BEND	.00	2197.9	1934.3	107.000	L	.0	.0	.000	.000	11.59	-18.16	19.24	19.24
	-BEND	.00	.0	.0	.000	L	.0	.0	.000	.000	-1.72	.00		
INV. 6 INS6	+BEND	.00	1465.3	1289.6	107.000	L	.0	.0	.000	.000	7.72	-12.11	12.82	12.82
	-BEND	.00	.0	.0	.000	L	.0	.0	.000	.000	-1.15	.00		
OPER HS20	+BEND	.00	5052.8	4446.9	107.000	L	7157.8	6299.6	121.000	.000	11.16	-11.16	43.61	43.61
	-BEND	.00	.0	.0	.000	L	.0	.0	.000	.000	.00	.00		
OPER 2 ST5	+BEND	.00	5266.0	4634.6	90.000	L	.0	.0	.000	.000	14.57	-7.75	39.84	39.84
	-BEND	.00	.0	.0	.000	L	.0	.0	.000	.000	-15.49	.00		
POST 1 SU2	+BEND	.00	2453.2	2159.1	108.000	L					7.00	-20.27	21.47	21.47
	-BEND	.00	.0	.0	.000	L					-1.47	.00		
POST 4 SU3	+BEND	.00	4743.1	4174.3	110.000	L					14.41	-12.87	41.01	41.01
	-BEND	.00	.0	.0	.000	L					-2.95	.00		
POST 2 SU4	+BEND	.00	5038.4	4434.3	107.667	L					3.92	-19.26	43.36	43.36
	-BEND	.00	.0	.0	.000	L					-3.83	.00		
POST 5 C3	+BEND	.00	3852.8	3390.8	111.000	L					18.20	-9.08	32.42	32.42
	-BEND	.00	.0	.0	.000	L					-4.51	.00		
POST 3 C4	+BEND	.00	4998.8	4399.4	89.167	L					12.29	-14.98	43.09	43.09
	-BEND	.00	.0	.0	.000	L					-8.77	.00		
POST 6 C5	+BEND	.00	5448.2	4794.9	89.167	L					8.58	-18.69	46.87	46.87
	-BEND	.00	.0	.0	.000	L					-9.43	.00		

4.3/62

LIVE LOAD DATA AT MOMENT CHECK POINT FOR
COMPOSITE STEEL AND CONCRETE FLEXURAL MEMBER - LOAD FACTOR RATING

DATE 1/22/98

D/P STRUCTURE I.D. = 001-001
MEMBER I.D. -- G 1
C.P. LOCATION -- 1.50

***** RATING FACTOR *****

		-- RATING FACTOR FOR -- MOMENT				-- RATING FACTOR FOR -- SERVICEABILITY				-- RATING FACTOR FOR -- SHEAR		RATING VALUE	SAFE LOAD CAP. (TONS)
		TOP		BOTT		TOP		BOTT		LEFT	RIGHT		
		+BEND	-BEND	+BEND	-BEND	+BEND	-BEND	+BEND	-BEND				
INV.	HS20	1.101	999.000	.960	999.000	2.275	999.000	1.618	999.000	15.292	15.292	HS 19.2	34.5
INV. 2	INS2	1.560	999.000	1.359	999.000	3.223	999.000	2.292	999.000	15.292	15.292	.0	48.9
INV. 3	INS3	2.079	999.000	1.812	999.000	4.298	999.000	3.055	999.000	20.390	20.390	.0	48.9
INV. 4	INS4	2.689	999.000	2.344	999.000	5.558	999.000	3.951	999.000	26.005	26.005	.0	46.9
INV. 5	INS5	3.585	999.000	3.125	999.000	7.410	999.000	5.268	999.000	34.673	34.673	.0	46.9
INV. 6	INS6	5.378	999.000	4.688	999.000	11.115	999.000	7.902	999.000	52.009	52.009	.0	46.9
OPER	HS20	1.835	999.000	1.599	999.000	3.792	999.000	2.696	999.000	25.487	25.487	HS 32.0	57.6
OPER 2	ST5	2.494	999.000	2.174	999.000	5.155	999.000	3.665	999.000	27.903	27.903	.0	87.0
POST 1	SU2	5.354	999.000	4.666	999.000	11.065	999.000	7.866	999.000	51.773	51.773		79.3
POST 4	SU3	2.769	999.000	2.414	999.000	5.723	999.000	4.069	999.000	27.103	27.103		79.6
POST 2	SU4	2.607	999.000	2.272	999.000	5.388	999.000	3.830	999.000	25.637	25.637		79.5
POST 5	C3	3.409	999.000	2.971	999.000	7.045	999.000	5.009	999.000	34.290	34.290		83.2
POST 3	C4	2.627	999.000	2.290	999.000	5.430	999.000	3.860	999.000	25.799	25.799		83.9
POST 6	C5	2.411	999.000	2.101	999.000	4.982	999.000	3.542	999.000	23.717	23.717		84.0

BARS M_u Capacity Incorrect. Does not control anyway

4.3/63

DATE 1/22/98

LIVE LOAD DATA AT MOMENT CHECK POINT FOR
COMPOSITE STEEL AND CONCRETE FLEXURAL MEMBER - LOAD FACTOR RATING

D/P STRUCTURE I.D. = 001-001
MEMBER I.D. -- G 1
C.P. LOCATION -- 41.75

***** LIVE LOAD CALCULATIONS (IMPACT FACTOR = .136 FOR +BEND AND = .136 FOR -BEND)

LIVE LOAD		-- LIVE LOAD -- TRUCK MOMENT REDIS LL+I FT-KIPS	LL+IMP FT-KIPS	LL FT-KIPS	LOC.NO. 1 WHEEL FT.	DIR	LANE MOMENT LL+IMP FT-KIPS	LL FT-KIPS	LOC.CONC. LOAD #1 FT.	LOC.CONC. LOAD #2 FT.	FIXED SHEAR +V KIPS	-V KIPS	SHEAR LEFT KIPS	RIGHT KIPS
INV. HS20	+BEND	.00	3838.2	3378.0	153.583	L	5363.4	4720.3	181.583	.000	-42.49	-64.81	80.08	87.42
	-BEND	.00	.0	.0	.000	L	.0	.0	.000	.000	-48.06	.00		
INV. 2 INS2	+BEND	.00	3838.2	3378.0	153.583	L	.0	.0	.000	.000	-23.86	-63.53	-65.03	-70.99
	-BEND	.00	.0	.0	.000	L	.0	.0	.000	.000	-6.88	.00		
INV. 3 INS3	+BEND	.00	2878.7	2533.5	153.583	L	.0	.0	.000	.000	-17.90	-47.65	-48.77	-53.24
	-BEND	.00	.0	.0	.000	L	.0	.0	.000	.000	-5.16	.00		
INV. 4 INS4	+BEND	.00	2213.2	1947.8	167.583	L	.0	.0	.000	.000	3.04	-36.63	-37.50	-40.93
	-BEND	.00	.0	.0	.000	L	.0	.0	.000	.000	-2.29	.00		
INV. 5 INS5	+BEND	.00	1659.9	1460.9	167.583	L	.0	.0	.000	.000	2.28	-27.47	-28.12	-30.70
	-BEND	.00	.0	.0	.000	L	.0	.0	.000	.000	-1.72	.00		
INV. 6 INS6	+BEND	.00	1106.6	973.9	167.583	L	.0	.0	.000	.000	1.52	-18.32	-18.75	-20.47
	-BEND	.00	.0	.0	.000	L	.0	.0	.000	.000	-1.15	.00		
OPER HS20	+BEND	.00	3838.2	3378.0	153.583	L	5363.4	4720.3	181.583	.000	-42.49	-64.81	80.08	87.42
	-BEND	.00	.0	.0	.000	L	.0	.0	.000	.000	-48.06	.00		
OPER 2 ST5	+BEND	.00	3960.6	3485.7	208.583	L	.0	.0	.000	.000	-37.76	-60.07	-63.92	-69.78
	-BEND	.00	.0	.0	.000	L	.0	.0	.000	.000	-15.49	.00		
POST 1 SU2	+BEND	.00	1862.4	1639.1	168.583	L					-3.55	-30.83	31.55	34.45
	-BEND	.00	.0	.0	.000	L					-1.47	.00		
POST 4 SU3	+BEND	.00	3577.4	3148.4	166.417	L					-31.94	-59.21	-60.61	-66.16
	-BEND	.00	.0	.0	.000	L					-2.95	.00		
POST 2 SU4	+BEND	.00	3786.2	3332.2	164.083	L					-39.49	-62.67	64.15	70.03
	-BEND	.00	.0	.0	.000	L					-3.83	.00		
POST 5 C3	+BEND	.00	2899.4	2551.8	151.583	L					-20.72	-47.99	-49.12	-53.63
	-BEND	.00	.0	.0	.000	L					-4.51	.00		
POST 3 C4	+BEND	.00	3832.5	3373.0	145.583	L					-36.16	-63.43	64.93	70.88
	-BEND	.00	.0	.0	.000	L					-8.77	.00		
POST 6 C5	+BEND	.00	4173.9	3673.4	145.583	L					-41.81	-69.09	-70.72	-77.20
	-BEND	.00	.0	.0	.000	L					-9.43	.00		

4.3/64

LIVE LOAD DATA AT MOMENT CHECK POINT FOR
COMPOSITE STEEL AND CONCRETE FLEXURAL MEMBER - LOAD FACTOR RATING

DATE 1/22/98

D/P STRUCTURE I.D. = 001-001
MEMBER I.D. -- G 1
C.P. LOCATION -- 1.75

***** RATING FACTOR *****

		-- RATING FACTOR FOR -- MOMENT				-- RATING FACTOR FOR -- SERVICEABILITY				-- RATING FACTOR FOR -- SHEAR		RATING VALUE	SAFE LOAD CAP. (TONS)
		TOP		BOTT		TOP		BOTT					
		+BEND	-BEND	+BEND	-BEND	+BEND	-BEND	+BEND	-BEND	LEFT	RIGHT		
INV.	HS20	.525	999.000	.742	999.000	1.866	999.000	1.383	999.000	4.221	4.221	HS 10.5	18.9
INV. 2	INS2	.000	.000	.000	2814.0	2904.0	.000	.000	.000	.000	.000	.0	26.4
INV. 3	INS3	.000	.000	.000	2814.0	2904.0	.000	.000	.000	.000	.000	.0	26.4
INV. 4	INS4	.000	.000	.000	2814.0	2904.0	.000	.000	.000	.000	.000	.0	25.4
INV. 5	INS5	.000	.000	.000	2814.0	2904.0	.000	.000	.000	.000	.000	.0	25.4
INV. 6	INS6	.000	.000	.000	2814.0	2904.0	.000	.000	.000	.000	.000	.0	25.4
OPER	HS20	.875	999.000	1.237	999.000	3.110	999.000	2.306	999.000	7.034	7.034	HS 17.5	31.5
OPER 2	ST5	.000	.000	.000	2814.0	2904.0	.000	.000	.000	.000	.000	.0	47.4
POST 1	SU2	2.519	999.000	3.563	999.000	8.957	999.000	6.640	999.000	17.852	17.852		42.8
POST 4	SU3	.000	.000	.000	2814.0	2904.0	.000	.000	.000	.000	.000		43.3
POST 2	SU4	1.239	999.000	1.753	999.000	4.406	999.000	3.266	999.000	8.782	8.782		43.4
POST 5	C3	.000	.000	.000	2814.0	2904.0	.000	.000	.000	.000	.000		45.3
POST 3	C4	1.224	999.000	1.732	999.000	4.353	999.000	3.227	999.000	8.675	8.675		44.9
POST 6	C5	.000	.000	.000	2814.0	2904.0	.000	.000	.000	.000	.000		45.0

← BARS M_u Capacity Incorrect

See 4.3/23

4.3/65

LIVE LOAD DATA AT MOMENT CHECK POINT FOR
COMPOSITE STEEL AND CONCRETE FLEXURAL MEMBER - LOAD FACTOR RATING

DATE 1/22/98

D/P STRUCTURE I.D. = 001-001
MEMBER I.D. -- G 1
C.P. LOCATION -- 2.00

***** LIVE LOAD CALCULATIONS (IMPACT FACTOR = .136 FOR +BEND AND = .136 FOR -BEND)

LIVE LOAD		-- LIVE LOAD -- TRUCK MOMENT REDIS LL+I FT-KIPS	LL+IMP FT-KIPS	LL FT-KIPS	LOC.NO. 1 WHEEL FT.	DIR	LANE MOMENT LL+IMP FT-KIPS	LL FT-KIPS	LOC.CONC. LOAD #1 FT.	LOC.CONC. LOAD #2 FT.	FIXED SHEAR +V KIPS	-V KIPS	SHEAR LEFT KIPS	RIGHT KIPS
INV. HS20	+BEND	.00	.0	.0	153.583	L	.0	.0	.000	.000	-63.53	-63.53	128.23	146.71
	-BEND	.00	.0	.0	.000	L	.0	.0	.000	.000	-16.80	.00		
INV. 2 INS2	+BEND	.00	.0	.0	153.583	L	.0	.0	.000	.000	-63.53	-63.53	-85.81	-98.18
	-BEND	.00	.0	.0	.000	L	.0	.0	.000	.000	-16.80	.00		
INV. 3 INS3	+BEND	.00	.0	.0	153.583	L	.0	.0	.000	.000	-47.65	-47.65	-64.36	-73.63
	-BEND	.00	.0	.0	.000	L	.0	.0	.000	.000	-12.60	.00		
INV. 4 INS4	+BEND	.00	.0	.0	167.583	L	.0	.0	.000	.000	-36.63	-36.63	-49.01	-56.08
	-BEND	.00	.0	.0	.000	L	.0	.0	.000	.000	-12.21	.00		
INV. 5 INS5	+BEND	.00	.0	.0	167.583	L	.0	.0	.000	.000	-27.47	-27.47	-36.76	-42.06
	-BEND	.00	.0	.0	.000	L	.0	.0	.000	.000	-9.16	.00		
INV. 6 INS6	+BEND	.00	.0	.0	167.583	L	.0	.0	.000	.000	-18.32	-18.32	-24.51	-28.04
	-BEND	.00	.0	.0	.000	L	.0	.0	.000	.000	-6.11	.00		
OPER HS20	+BEND	.00	.0	.0	153.583	L	.0	.0	.000	.000	-63.53	-63.53	128.23	146.71
	-BEND	.00	.0	.0	.000	L	.0	.0	.000	.000	-16.80	.00		
OPER 2 ST5	+BEND	.00	.0	.0	138.583	L	.0	.0	.000	.000	-72.28	-72.28	-87.20	-99.77
	-BEND	.00	.0	.0	.000	L	.0	.0	.000	.000	-25.41	.00		
POST 1 SU2	+BEND	.00	.0	.0	168.583	L					-30.83	-30.83	41.35	47.31
	-BEND	.00	.0	.0	.000	L					-16.34	.00		
POST 4 SU3	+BEND	.00	.0	.0	166.417	L					-59.21	-59.21	-79.64	-91.12
	-BEND	.00	.0	.0	.000	L					-30.22	.00		
POST 2 SU4	+BEND	.00	.0	.0	164.083	L					-62.67	-62.67	84.33	96.49
	-BEND	.00	.0	.0	.000	L					-21.06	.00		
POST 5 C3	+BEND	.00	.0	.0	151.583	L					-47.99	-47.99	-65.32	-74.74
	-BEND	.00	.0	.0	.000	L					-19.38	.00		
POST 3 C4	+BEND	.00	.0	.0	145.583	L					-63.43	-63.43	86.12	98.53
	-BEND	.00	.0	.0	.000	L					-17.82	.00		
POST 6 C5	+BEND	.00	.0	.0	145.583	L					-69.09	-69.09	-93.84	-107.37
	-BEND	.00	.0	.0	.000	L					-19.34	.00		

4.3/66

LIVE LOAD DATA AT MOMENT CHECK POINT FOR
COMPOSITE STEEL AND CONCRETE FLEXURAL MEMBER - LOAD FACTOR RATING

DATE 1/22/98

D/P STRUCTURE I.D. = 001-001
MEMBER I.D. -- G 1
C.P. LOCATION -- 2.00

***** RATING FACTOR *****

		-- RATING FACTOR FOR -- MOMENT				-- RATING FACTOR FOR -- SERVICEABILITY				-- RATING FACTOR FOR -- SHEAR		RATING VALUE	SAFE LOAD CAP.(TONS)
		TOP		BOTT		TOP		BOTT					
		+BEND	-BEND	+BEND	-BEND	+BEND	-BEND	+BEND	-BEND	LEFT	RIGHT		
INV.	HS20	999.000	999.000	999.000	999.000	999.000	999.000	999.000	999.000	4.470	4.470	HS 89.4	160.9
INV. 2	INS2	999.000	999.000	999.000	999.000	999.000	999.000	999.000	999.000	6.679	999.000	.0	240.4
INV. 3	INS3	999.000	999.000	999.000	999.000	999.000	999.000	999.000	999.000	8.905	999.000	.0	240.4
INV. 4	INS4	999.000	999.000	999.000	999.000	999.000	999.000	999.000	999.000	11.694	999.000	.0	233.9
INV. 5	INS5	999.000	999.000	999.000	999.000	999.000	999.000	999.000	999.000	15.592	999.000	.0	233.9
INV. 6	INS6	999.000	999.000	999.000	999.000	999.000	999.000	999.000	999.000	23.387	999.000	.0	233.9
OPER	HS20	999.000	999.000	999.000	999.000	999.000	999.000	999.000	999.000	7.449	7.449	HS149.0	268.2
OPER 2	ST5	999.000	999.000	999.000	999.000	999.000	999.000	999.000	999.000	10.954	999.000	.0	438.1
POST 1	SU2	999.000	999.000	999.000	999.000	999.000	999.000	999.000	999.000	23.101	23.101		392.7
POST 4	SU3	999.000	999.000	999.000	999.000	999.000	999.000	999.000	999.000	11.994	999.000		395.8
POST 2	SU4	999.000	999.000	999.000	999.000	999.000	999.000	999.000	999.000	11.327	11.327		396.4
POST 5	C3	999.000	999.000	999.000	999.000	999.000	999.000	999.000	999.000	14.623	999.000		409.4
POST 3	C4	999.000	999.000	999.000	999.000	999.000	999.000	999.000	999.000	11.092	11.092		406.5
POST 6	C5	999.000	999.000	999.000	999.000	999.000	999.000	999.000	999.000	10.179	999.000		407.1

4.3/67

METRIC D: LOAD CAPACITY INFORMATION METRIC 4.3/68

1. **BRIDGE DATA:**
Bridge Number 770083
STR Type Main [BID Item B1(43)] 3020010
Date May 6, 1998
STR Type APR [BID Item B2(44)] 0000000

2. **POSTING DATA:**
Posted NO If yes, Existing
Restrictions
BID Item H8(41) G
Posting Needed NO If Yes, Proposed
Restrictions
BID Item H11(70) 5
BID Item H7(31) 5

3. **ANALYSIS DATA:**

A. Method of Analysis:
- X Load Factor
- ___ Working Stress

B. Analysis System:
- X BARS
- ___ SALOD
- ___ BRUFEM
- ___ Load Test
- X Other See Comments Below

C. Analysis Based On:
- X Design Drawings
- ___ As-Built Record Plans
- ___ Shop Drawings
- ___ Field Measurement
- ___ Catalogs
- ___ Sample Testing
- ___ Other

D. Data Stored:
- X District Office
- ___ Central Office
- ___ Microfilm
- ___ Bridge Owner
- ___ Materials Test Lab
- ___ Other

E. Controlling Member Analyzed:

Material:
- 1 Steel
- ___ Concrete
  - ___ Cast in Place
  - ___ Precast
  - ___ Prestressed
  - ___ Post Tensioned
- ___ Timber
- ___ Other

Function:
- ___ Slab
- ___ Stringer
- ___ Floor Beam
- 1 Girder
- ___ Culvert
- ___ Truss

Substructure:
- ___ Bent Construction
  - ___ Piling
  - ___ Cap
- ___ Pier Construction
  - ___ Piling
  - ___ Footing
  - ___ Column
  - ___ Cap

Span:
- 1 Simple
- ___ Continuous
- ___ Frame

Slab:
- ___ Non-Composite
- 1 Composite

Shape:
- ___ Rolled
- 1 Built-up Welded
- ___ Built-up Riveted
- ___ Box Shape
- ___ AASHTO Girders
- ___ Other

Impact Factor: 0.136

B.I.D. Item H2B 1
B.I.D. Item H9A 1
B.I.D. Item H10A 1

4. **Load Rating Summary Table:**

LOAD RATING SUMMARY FOR OPERATING RATING (GROSS TONS)

VEHICLE TYPE Metric Tons (U.S. Tons)	METRIC RATING	U.S. RATING	RATING FACTOR	SPAN NO.	SPAN LENGTH	CONTR. MEMBER	M OR V	LLDF
SU2 - 15.4(17.0)		142.6	8.387	1	242	1	M	2.182
SU3 - 29.9 (33.0)		144.1	4.366	1	242	1	M	2.182
SU4 - 31.8 (35.0)		144.4	4.126	1	242	1	M	2.182
C3 - 25.4 (28.0)		150.8	5.387	1	242	1	M	2.182
C4 - 33.2 (36.6)		149.4	4.076	1	242	1	M	2.182
C5 - 36.3 (~~40.0~~ 36.6)		137.0	3.742	1	242	1	M	2.182
ST5 - 36.3 (40.0)		157.8	3.944	1	242	1	M	2.182
HS20 - 32.7 (36.0)		104.8	2.912	1	242	1	M	2.182
HS20 - Inventory Rating		62.9	1.747					

t = Metric Ton = 1,000 kg T = U.S. Ton = 2,000 pounds Mass

5. **Comments:**
BARS Program could not calculate Moment Capacity for a Composite Compact Section. Therefore BARS output was corrected using Moment Capacity from Consultant's Design Program.

6. **Computations:**
Performed By A. Safko Date May 6, 1998
Checked By T. Menke Date May 7, 1998
Reviewed By M. Ercholtz Date May 7, 1998

7. **Responsible Engineer:**
P.E. # 36078 Mark A. Ercholtz Date May 7, 1998

URS Greiner

LETTER OF TRANSMITTAL

To:	From: Mark Eicholtz	Date: May 27, 1998
Mr. Ying Sujjavanich **Florida Department of Transportation** Structures and Facilities 1650 North Kepler Road Deland, Florida 32724 (904) 736-5426	**URS Greiner, Inc.** P.O. Box 31646 (33631-3416) 7650 West Courtney Campbell Causeway Tampa, Florida 33607-1462 (813) 286-1711	**Attention:** Mr.Ying Sujjavanich **Job Number:** V100334.00 **Re:** Maitland Blvd. over S.R. 434

The following items are being sent: __X__ attached _____ under separate cover by_____

_____ Shop Drawings _____ Prints ____ Plans _____ Samples _____ Specifications __X__ Bridge Load Rating

Copies	Date or Number	Description
1	May 27, 1998	Bridge Load Rating (Signed and Sealed)
1	May 27, 1998	Supporting Calculations - Sections 4.2.3 and 4.2.5 from the Design Calculation Book

#770083

Transmittals for reasons checked

_____ **For Approval** _____ **No Exceptions Taken** _____ **Resubmit** _____**copies for approval**

__X__ **For Your Use** _____ **Make Corrections Noted** _____ **Submit** _____**copies for distribution**

__X__ **As Required in Scope** _____ **Amend and Resubmit** _____ **Return** _____**corrected prints**

_____ **For Review and Comment** _____ _____

Remarks

As discussed on the phone, we are enclosing calculations from the design book that support the load rating calculations. Section 4.2.3 contains our in-house computer program output, and section 4.2.5 contains hand calculations checking the girder for the non-composite dead loads and for composite compact criteria. Pages 4.2.5/1 & 5 show that the girder is not compact under the non-composite loadings. Pages 4.2.5/8-11 go through the equations showing that the girder is compact when composite. The section capacities used in the load ratings are output on 4.2.3/17. When we checked the section capacities by hand (see pages 4.2.5/12-21), it was found that our in-house program values were incorrect. We therefore revised the load rating calculations. Only pages 4.3/21, 22, 23 and 68 changed, but we have resubmitted a new signed and sealed set of load rating calculations. If you have any questions, please don't hesitate to call.

D.O.T
RECEIVED
MAY 29 1998
STRUCT &
FACILITIES

Copies
Richard Bell - FDOT Project Manager (Transmittal Only)
Neil Kenis - FDOT (Transmittal Only)
Steve Noppinger -URS Greiner (Transmittal Only)

If enclosures are not as noted, kindly notify us at once.

Signed Mark Eicholtz

Equal Opportunity Employer M/F

C1_171(mse)\\C:\WPWIN61\WPDOCS\PROJECTS\MAIT-434\FINAL\TRAN-YS.WPD

BRIDGE NO. 770083

S.R 414 (MAITLAND BLVD.) INTERCHANGE
AT
S.R. 434 (FOREST CITY RD.)

SPN: 77002-3505
WPI NO.: 5117764
SEMINOLE COUNTY

4.3 LOAD RATINGS	Pages
Bridge and Girder Layout	1 - 5
BARS Input	6 - 15
BARS Output	
TITLE. LIS	16
LISTA. LIS	17
RATE2. LIS	18 - 22
SUMARY. LIS	23
ERRSUM. LIS	24 - 40
REPORT . LIS	41
NUFLEX. LIS	42 - 57
NVTRK. LIS	58 - 67
Load Capacity Information Sheet	68

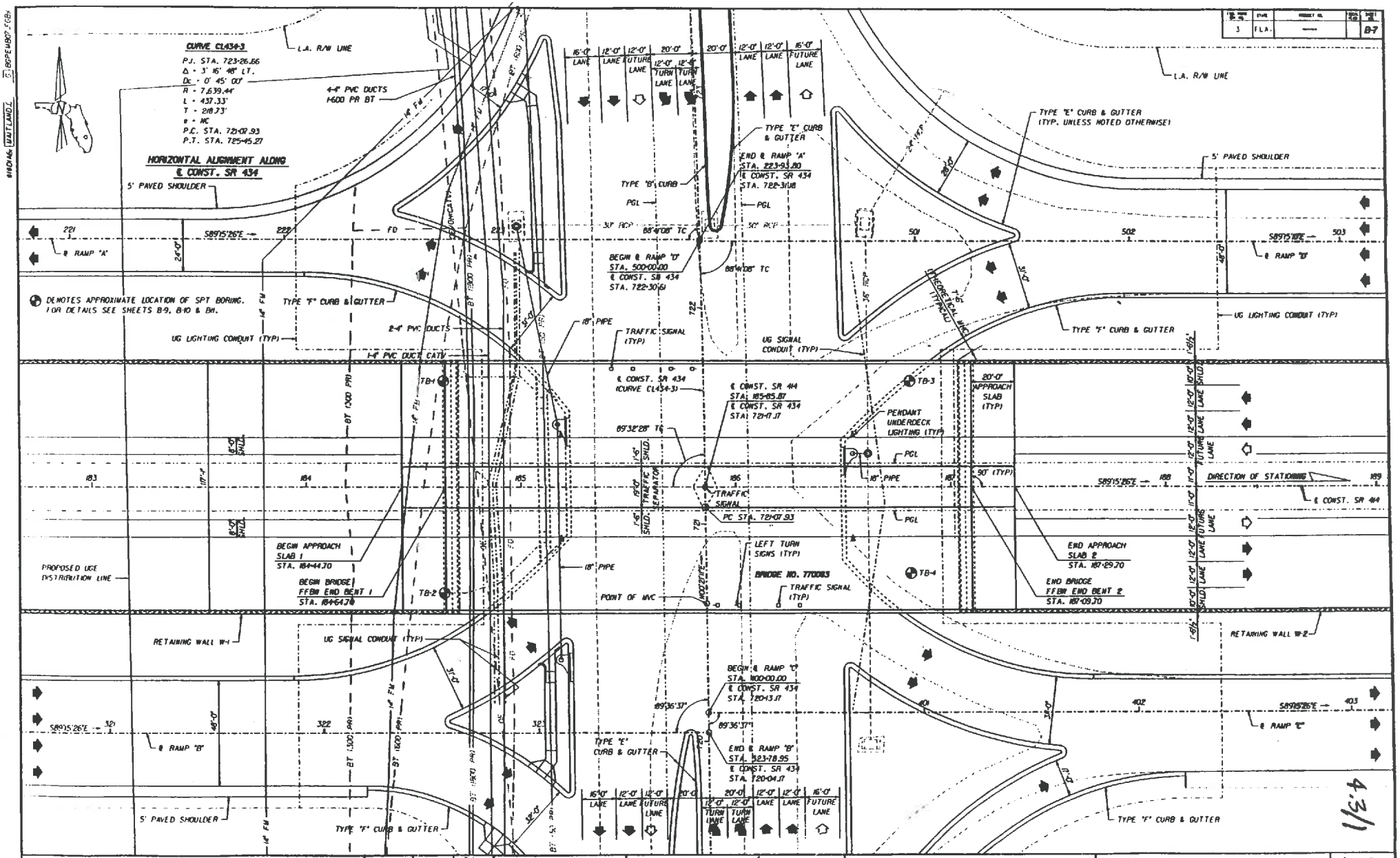

REVISIONS					
Date	By	Description	Date	By	Description

	Name	Date
Drawn by	JLS	8/97
Checked by	MH	8/97
Designed by	MH	8/97
Checked by	MSE	8/97
Approved by	MARK S. EICHOLTZ	

ENGINEER OF RECORD:
URS Greiner, Inc.
P.O. BOX 3545, 7410 WEST
COURTNEY CAMPBELL CAUSEWAY
TAMPA, FLORIDA 33607-1462

LOGO: URS Greiner

SEAL: Mark S. Eicholtz 3/2/98

FLORIDA DEPARTMENT OF TRANSPORTATION
STRUCTURES DESIGN OFFICE

ROAD NO.	COUNTY	PROJECT NO.
SR 414	SEMINOLE	77002-3505

SHEET TITLE: PLAN - BRIDGE NO. 770083

PROJECT NAME: S.R. 414 OVER S.R. 434

Drawing No.

Index No.

FED. ROAD DIV. NO.	STATE	SHEET NO.	REVISED	SHEET NO.
3	FLA.	—		8-8

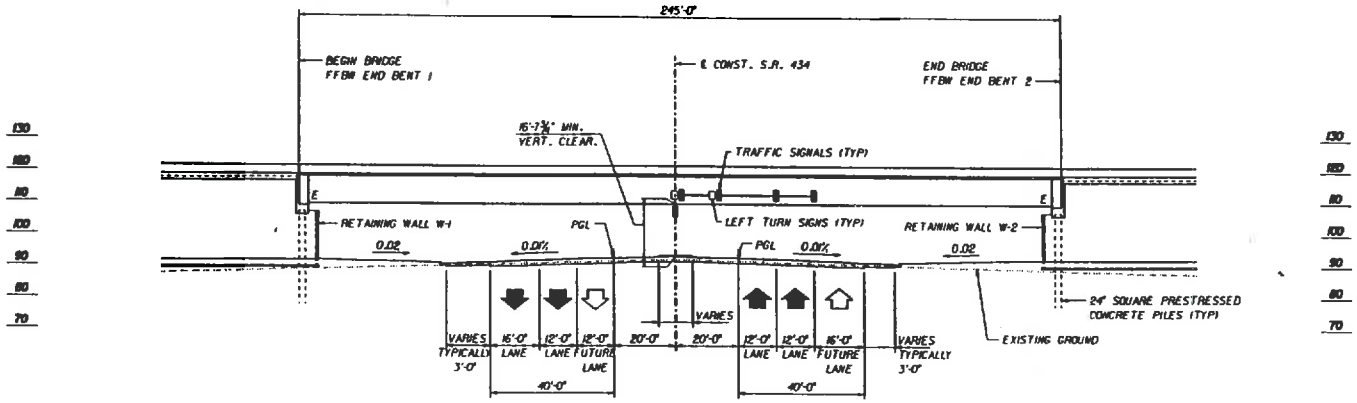

ELEVATION

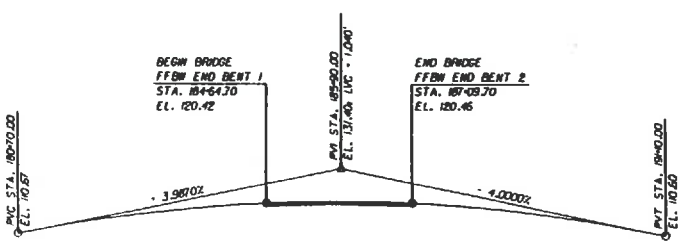

VERTICAL ALIGNMENT ALONG P.G.L. SR 414

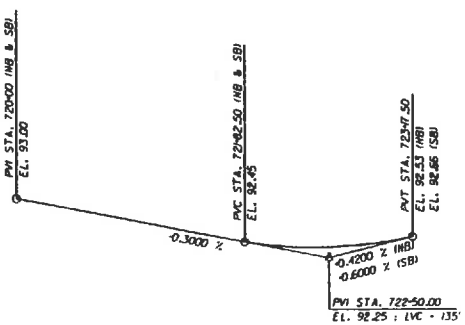

VERTICAL ALIGNMENT ALONG P.G.L. SR 434

TRAFFIC DATA				
ROADWAY	ADT YEAR 2002	ADT YEAR 2022	DESIGN SPEED	% TRUCKS
S.R.414 (MAITLAND BLVD.)	50,600	68,100	45 MPH	3.0
S.R. 434 (FOREST CITY RD.)	54,100	73,400	45 MPH	3.0
K = 8.9%			D = 55.1%	

4.3/2

REVISIONS					
Date	By	Description	Date	By	Description

	Name	Date
Drawn by	KAC	8/97
Checked by	MH	8/97
Designed by	MH	8/97
Checked by	MSE	8/97
Approved by	MARK S. EICHOLTZ	

ENGINEER OF RECORD:
URS Greiner, Inc.
P.O. BOX 31-6, 7420 WEST
COURTNEY CAMPBELL CAUSEWAY
TAMPA, FLORIDA 33607-1462

LOGO: URS Greiner

SEAL: Mark S. Eicholtz 3/2/98

FLORIDA DEPARTMENT OF TRANSPORTATION
STRUCTURES DESIGN OFFICE

ROAD NO.	COUNTY	PROJECT NO.
SR 414	SEMINOLE	77002-3505

SHEET TITLE: ELEVATION - BRIDGE NO. 770083

PROJECT NAME: S.R. 414 OVER S.R. 434

Drawing No.

Index No.

FED. ROAD DIV. NO.	STATE	PROJECT NO.	SHEET NO.
3	FLA.	—	B-17

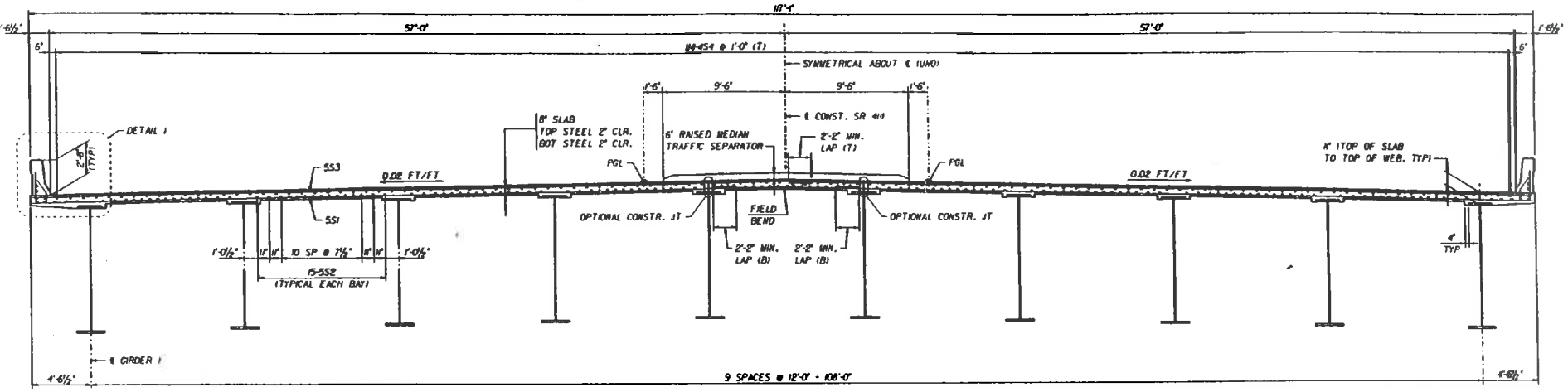

TYPICAL SECTION

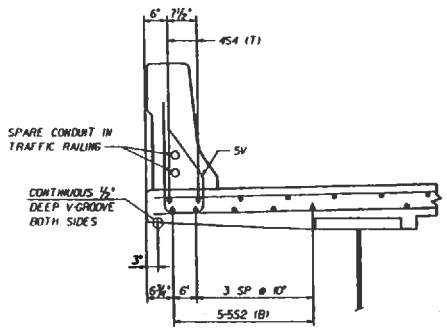

DETAIL I

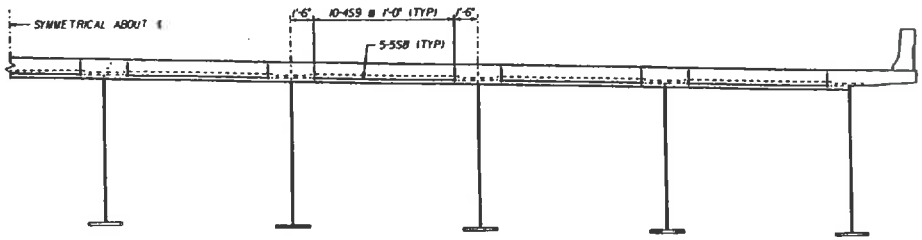

HALF SECTION AT END OF SPAN

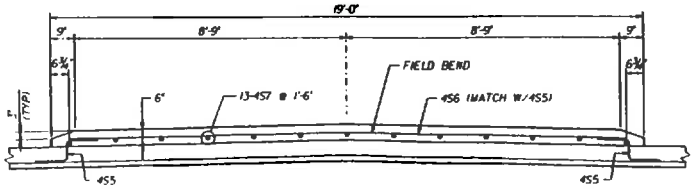

SECTION THRU TRAFFIC SEPARATOR

ESTIMATED QUANTITIES			
ITEM		UNIT	QUANTITY
CLASS II CONCRETE (BRIDGE DECK)	SLAB #	CU. YD.	802.1
	HAUNCH		40.7
	TOTAL		842.8
REINFORCING STEEL (SUPERSTRUCTURE)		LBS.	212,001

INCLUDES 84.4 CU. YD. FOR TRAFFIC SEPARATOR

4.3/3

WORK THIS SHEET WITH SHEETS B-16 & B-18.

REVISIONS					
Date	By	Description	Date	By	Description

	Name	Date
Drawn by	DCW	10/97
Checked by	MH	10/97
Designed by	MH	10/97
Checked by	ADS	10/97
Approved by	MARK S. EICHOLTZ	

ENGINEER OF RECORD:
URS Greiner, Inc.
P.O. BOX 3545, 2nd WEST
COURTNEY CAMPBELL CAUSEWAY
TAMPA, FLORIDA 33601-3545

LOGO: URS Greiner

SEAL: Mark S. Eicholtz 3/2/98

FLORIDA DEPARTMENT OF TRANSPORTATION
STRUCTURES DESIGN OFFICE

ROAD NO.	COUNTY	PROJECT NO.
SR 414	SEMINOLE	77002-3505

SHEET TITLE: SUPERSTRUCTURE SECTION

PROJECT NAME: S.R. 414 OVER S.R. 434

Drawing No.

Index No.

BDECW808.FGM
WINDING: WATLAND.C

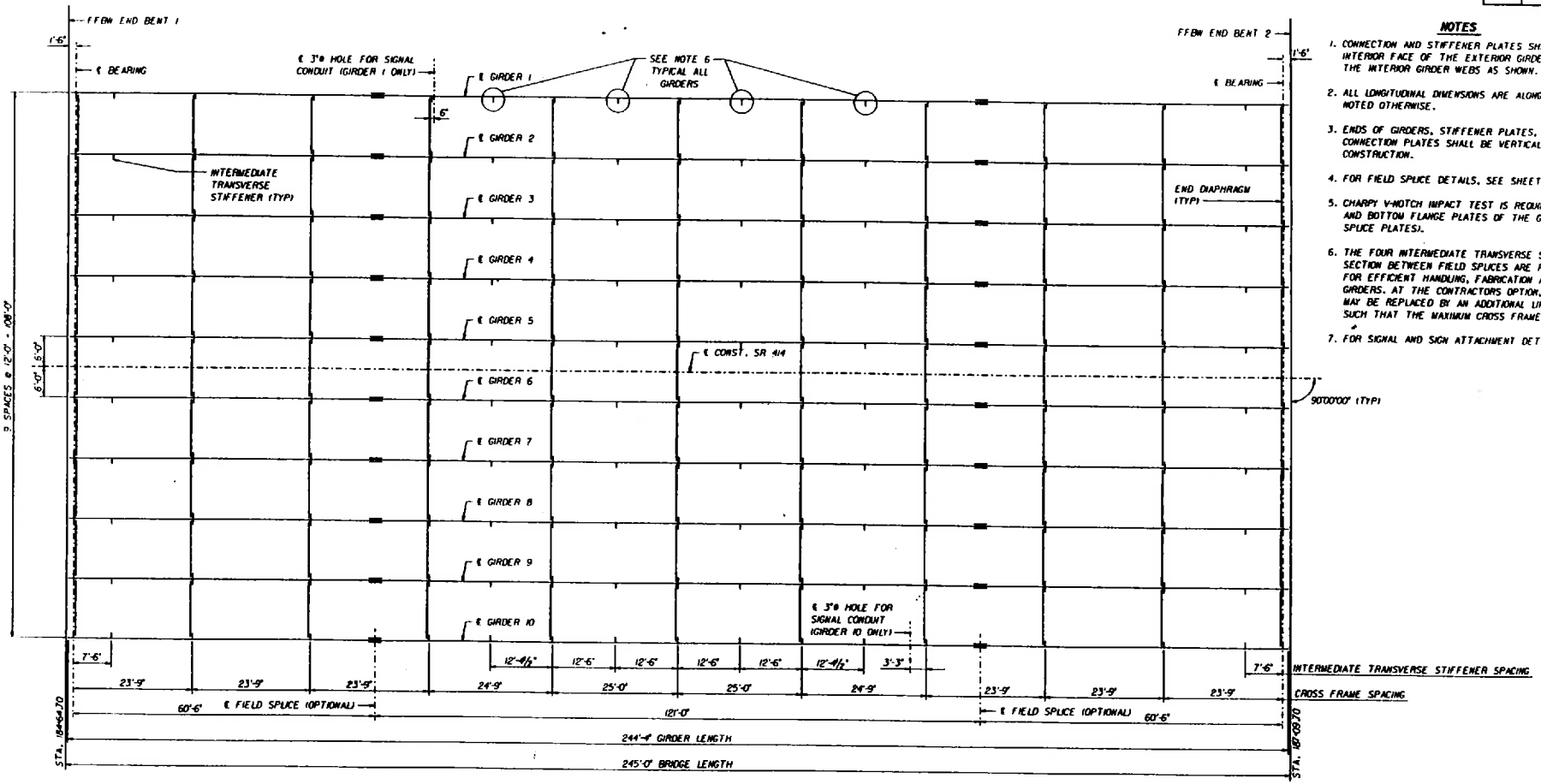

FRAMING PLAN

NOTES

1. CONNECTION AND STIFFENER PLATES SHALL BE LOCATED ON THE INTERIOR FACE OF THE EXTERIOR GIRDER WEBS AND LOCATED ON THE INTERIOR GIRDER WEBS AS SHOWN.
2. ALL LONGITUDINAL DIMENSIONS ARE ALONG ℄ GIRDER, UNLESS NOTED OTHERWISE.
3. ENDS OF GIRDERS, STIFFENER PLATES, BEARING STIFFENERS AND CONNECTION PLATES SHALL BE VERTICAL UPON COMPLETION OF CONSTRUCTION.
4. FOR FIELD SPLICE DETAILS, SEE SHEET B-22.
5. CHARPY V-NOTCH IMPACT TEST IS REQUIRED FOR ALL WEB PLATES AND BOTTOM FLANGE PLATES OF THE GIRDERS (INCLUDING FIELD SPLICE PLATES).
6. THE FOUR INTERMEDIATE TRANSVERSE STIFFENERS IN THE MIDDLE SECTION BETWEEN FIELD SPLICES ARE REQUIRED BY AASHTO FOR EFFICIENT HANDLING, FABRICATION AND ERECTION OF THE GIRDERS. AT THE CONTRACTORS OPTION, THESE STIFFENERS MAY BE REPLACED BY AN ADDITIONAL LINE OF CROSS FRAMES SUCH THAT THE MAXIMUM CROSS FRAME SPACING IS 23'-9".
7. FOR SIGNAL AND SIGN ATTACHMENT DETAILS, SEE SHEET B-24.

4.3/4

REVISIONS

Date	By	Description	Date	By	Description

	Name	Date
Drawn by	DCW	10/97
Checked by	MH	10/97
Designed by	MH	10/97
Checked by	WSE	10/97
Approved by	MARK S. EICHOLTZ	

ENGINEER OF RECORD: URS Greiner, Inc. P.O. BOX 3646, 708 WEST COURTNEY CAMPBELL CAUSEWAY TAMPA, FLORIDA 33607-146

LOGO: URS Greiner

SEAL: Mark S. Eicholtz 3/2/98

FLORIDA DEPARTMENT OF TRANSPORTATION
STRUCTURES DESIGN OFFICE

ROAD NO.	COUNTY	PROJECT NO.
SR 414	SEMINOLE	77002-3505

SHEET TITLE: FRAMING PLAN

PROJECT NAME: S.R. 414 OVER S.R. 434

Drawing No.

Index No.

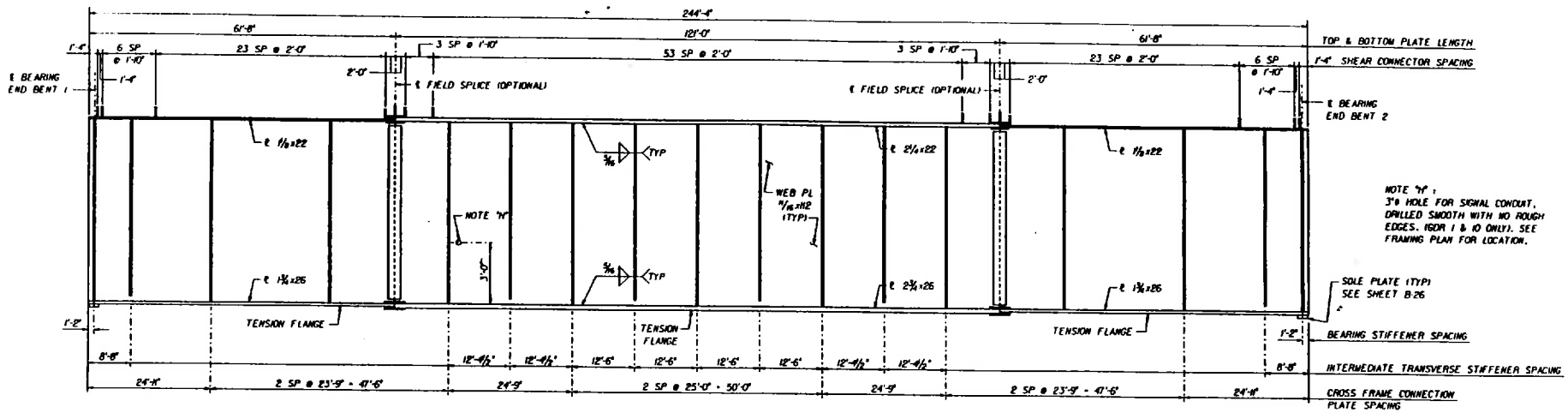

NOTE "H":
3" ø HOLE FOR SIGNAL CONDUIT, DRILLED SMOOTH WITH NO ROUGH EDGES. (GDR 1 & 10 ONLY). SEE FRAMING PLAN FOR LOCATION.

GIRDER ELEVATION

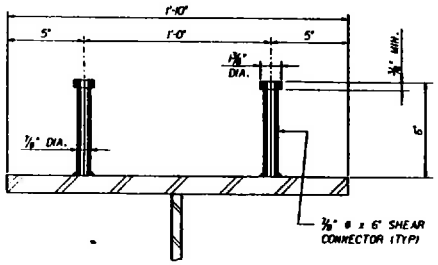

SHEAR CONNECTOR DETAIL

4.3/5

REVISIONS					
Date	By	Description	Date	By	Description

	Name	Date
Drawn by	DCW	10/97
Checked by	MH	10/97
Designed by	MH	10/97
Checked by	MSE	10/97
Approved by	MARK S. FRIEDLITZ	

ENGINEER OF RECORD
URS Greiner, Inc.
P.O. BOX 3545, 748 WEST
COURTNEY CAMPBELL CAUSEWAY
TAMPA, FLORIDA 33607-1461

LOGO: URS Greiner

SEAL: Mark S. Friedlitz 3/2/98

FLORIDA DEPARTMENT OF TRANSPORTATION
STRUCTURES DESIGN OFFICE

ROAD NO.	COUNTY	PROJECT NO.
SR 414	SEMINOLE	77002-3505

SHEET TITLE: GIRDER ELEVATION

PROJECT NAME: S.R. 414 OVER S.R. 434

Drawing No.

Index No.

STATE OF FLORIDA DEPARTMENT OF TRANSPORTATION

METRIC D: LOAD CAPACITY INFORMATION METRIC 4.3/68

FORM 850-010-06 MAINTENANCE - 09/95

1. **BRIDGE DATA:**
Bridge Number 770083
STR Type Main [BID Item B1(43)] 3020010
Date May 26, 1998
STR Type APR [BID Item B2(44)] 0000000

2. **POSTING DATA:**
Posted NO If yes, Existing
Restrictions
BID Item H8(41) G
Posting Needed NO If Yes, Proposed
Restrictions
BID Item H11(70) 5
BID Item H7(31) 5

3. **ANALYSIS DATA:**

A. Method of Analysis:
- X Load Factor
- ___ Working Stress

B. Analysis System:
- X BARS
- ___ SALOD
- ___ BRUFEM
- ___ Load Test
- X Other See Comments Below

C. Analysis Based On:
- X Design Drawings
- ___ As-Built Record Plans
- ___ Shop Drawings
- ___ Field Measurement
- ___ Catalogs
- ___ Sample Testing
- ___ Other

D. Data Stored:
- X District Office
- ___ Central Office
- ___ Microfilm
- ___ Bridge Owner
- ___ Materials Test Lab
- ___ Other

E. Controlling Member Analyzed:

Material:
- 1 Steel
- ___ Concrete
  - ___ Cast in Place
  - ___ Precast
  - ___ Prestressed
  - ___ Post Tensioned
- ___ Timber
- ___ Other

Function:
- ___ Slab
- ___ Stringer
- ___ Floor Beam
- 1 Girder
- ___ Culvert
- ___ Truss

Substructure:
- ___ Bent Construction
  - ___ Piling
  - ___ Cap
- ___ Pier Construction
  - ___ Piling
  - ___ Footing
  - ___ Column
  - ___ Cap

Span:
- 1 Simple
- ___ Continuous
- ___ Frame

Slab:
- ___ Non-Composite
- 1 Composite

Shape:
- ___ Rolled
- 1 Built-up Welded
- ___ Built-up Riveted
- ___ Box Shape
- ___ AASHTO Girders
- ___ Other

Impact Factor: 0.136

B.I.D. Item H2B 1
B.I.D. Item H9A 1
B.I.D. Item H10A 1

4. Load Rating Summary Table:

LOAD RATING SUMMARY FOR OPERATING RATING (GROSS TONS)

VEHICLE TYPE Metric Tons (U.S. Tons)	METRIC RATING	U.S. RATING	RATING FACTOR	SPAN NO.	SPAN LENGTH	CONTR. MEMBER	M OR V	LLDF
SU2 - 15.4(17.0)		89.4	5.256	1	242	1	M	2.182
SU3 - 29.9 (33.0)		90.3	2.736	1	242	1	M	2.182
SU4 - 31.8 (35.0)		90.5	2.585	1	242	1	M	2.182
C3 - 25.4 (28.0)		94.5	3.376	1	242	1	M	2.182
C4 - 33.2 (~~36.6~~) (36.65)		93.6	2.554	1	242	1	M	2.182
C5 - 36.3 (~~40.0~~) (36.6)		85.8	2.345	1	242	1	M	2.182
ST5 - 36.3 (40.0)		98.9	2.471	1	242	1	M	2.182
HS20 - 32.7 (36.0)		65.7	1.825	1	242	1	M	2.182
HS20 - Inventory Rating		39.4	1.095					

t = Metric Ton = 1,000 kg T = U.S. Ton = 2,000 pounds Mass

5. Comments:
BARS Program could not calculate Moment Capacity for a Composite Compact Section. Therefore BARS output was corrected using Moment Capacity from Consultant's Design Program and Hand calculations

6. Computations:
Performed By A. Safko Date May 26, 1998
Checked By T. Menke Date May 27, 1998
Reviewed By M. Ercholtz Date May 27, 1998

7. Responsible Engineer:
P.E. # 36078 Mark D. Ercholtz Date May 27, 1998

URS Greiner

JOB SR 414 (Maitland Blvd.) over SR 434 SHEET __ OF __ PROJ. NO V100334.00
DESCRIPTION COMPUTED BY MH DATE 8/15/97
CHECKED BY ADS DATE 1/13/98

Girder Design

The Following Loads will be used in the B600GO Program Run.

Dead Load

Non-Composite

Haunch - Program will Calculate

SIP Forms - Program will Calculate

Slab - Program will Calculate

Detail Factor - Use 1.15

Composite Dead load

Future Wearing Surface = Program will Calculate.

Traffic barrier Load = (2 x 0.418 K/ft) = 0.836 K/ft

Median barrier = $\left[\left(19' \times .5' - \cancel{0.5} \times \frac{2''}{12} \times 2 \times \frac{1}{2}\right) \times 0.15\right]$ = 1.4125 K/ft

O.K., THIS DESIGN IS CONSERVATIVE

2.2485 K/ft

Use 2,248.5 #/ft as input in the Program.

```
SSSSSSSSSS  6666666666666666666666666666666666666666666666666666666666666666666666666666666666666666666666666666666666666666  SSSSSSSSSS
SSSSSSSSSS  66666666666666666666  Digital Equipment Corporation - OpenVMS AXP Version V6.1  66666666666666666666  SSSSSSSSSS
SSSSSSSSSS  6666666666666666666666666666666666666666666666666666666666666666666666666666666666666666666666666666666666666666  SSSSSSSSSS
```

```
 GGGG   III   TTTTT   AAA
G        I      T    A   A
G        I      T    A   A
G        I      T    A   A
G GGG    I      T    AAAAA
G   G    I      T    A   A
 GGG    III     T    A   A
```

```
TTTTTTTTTT   IIIIII   TTTTTTTTTT  LL          EEEEEEEEEE  FFFFFFFFFF   IIIIII   LL          EEEEEEEEEE
TTTTTTTTTT   IIIIII   TTTTTTTTTT  LL          EEEEEEEEEE  FFFFFFFFFF   IIIIII   LL          EEEEEEEEEE
   TT          II        TT      LL          EE          FF             II      LL          EE
   TT          II        TT      LL          EE          FF             II      LL          EE
   TT          II        TT      LL          EE          FF             II      LL          EE
   TT          II        TT      LL          EE          FF             II      LL          EE
   TT          II        TT      LL          EEEEEEEE    FFFFFFFF       II      LL          EEEEEEEE
   TT          II        TT      LL          EEEEEEEE    FFFFFFFF       II      LL          EEEEEEEE
   TT          II        TT      LL          EE          FF             II      LL          EE
   TT          II        TT      LL          EE          FF             II      LL          EE
   TT          II        TT      LL          EE          FF             II      LL          EE
   TT          II        TT      LL          EE          FF             II      LL          EE
   TT       IIIIII       TT      LLLLLLLLLL  EEEEEEEEEE  FF           IIIIII   LLLLLLLLLL  EEEEEEEEEE
   TT       IIIIII       TT      LLLLLLLLLL  EEEEEEEEEE  FF           IIIIII   LLLLLLLLLL  EEEEEEEEEE
```

```
        DDDDDDDD     AAAAAA    TTTTTTTTTT    ;;;;     222222
        DDDDDDDD     AAAAAA    TTTTTTTTTT    ;;;;     222222
        DD     DD  AA     AA     TT         ;;;;   22      22
        DD     DD  AA     AA     TT         ;;;;   22      22
        DD     DD  AA     AA     TT                        22
        DD     DD  AA     AA     TT                        22
        DD     DD  AA     AA     TT         ;;;;        22
        DD     DD  AA     AA     TT         ;;;;        22
        DD     DD  AAAAAAAAAA    TT         ;;;;      22
        DD     DD  AAAAAAAAAA    TT         ;;;;      22
....    DD     DD  AA     AA     TT           ;;    22
....    DD     DD  AA     AA     TT           ;;    22
....    DDDDDDDD   AA     AA     TT         ;;    2222222222
....    DDDDDDDD   AA     AA     TT         ;;    2222222222
```

File _2DRA2:[GITA]TITLEFILE.DAT;2 (44836,15,0), last revised on 18-AUG-1997 11:46, is a 4 block sequential file owned by UIC [ACC,GITA]. The records are variable length with FORTRAN (FTN) carriage control. The longest record is 67 bytes.

Job TITLEFILE (269) queued to HPQ25 on 18-AUG-1997 11:47 by user GITA, UIC [ACC,GITA], under account 20200836 at priority 100, started on printer LTA606: on 18-AUG-1997 11:47 from queue HPQ25.

```
SSSSSSSSSS  6666666666666666666666666666666666666666666666666666666666666666666666666666666666666666666666666666666666666666  SSSSSSSSSS
SSSSSSSSSS  66666666666666666666  Digital Equipment Corporation - OpenVMS AXP Version V6.1  66666666666666666666  SSSSSSSSSS
SSSSSSSSSS  6666666666666666666666666666666666666666666666666666666666666666666666666666666666666666666666666666666666666666  SSSSSSSSSS
```

4.2.3/4

URS GREINER

PROGRAM
B6060
~~V4.5~~

00 0 0 MAITLAND BLVD. DES MH 15AUG97 CHK ADS ~~15AUG97~~ 1-14-98

SR 414 OVER SR434 INTERIOR GIRDER DESIGN

PAGE 1
(ENGLISH UNITS)

INPUT VERIFICATION
****

PROGRAM OPTIONS

NO. OF INTER	SERV-1 L.F.-2	ANAL-1,DES-2 RATING-3	TF SUP BY SLAB	ISEC-1 BOX -2	STRUC SETUP COMP-1, NON-2,	STRESS COMPU COMP THRU-3
20.	2.	1.	1.	1.	1.	1.

OUTPUT NO-0, YES-1

SEC PROP	M/V	DEFL	STRESSES DL	LL	TOT	FAT	M/V FILE
1.	1.	1.	1.	1.	1.	1.	0.

STRUCTURAL CONFIGURATION

SPAN LENGTHS (FT) :

242.00

BEAM SPACINGS (FT) :

20 12.0

STRUCTURAL DETAILS

NO. OF BEAMS	INT. BM OR EXT.	DES SLAB DEPTH(IN)	INTEGRAL WS (IN)	HAUNCH(IN) D	W	WS (LBS/SQ FT)	BM DETAIL FACTOR
10	0.	8.00	0.00	3.00	24.00	15.00	1.15

DEAD LOAD (LBS/LF)	PERM. FORM (LBS/SF)	S.D.L. (LBS/LF)	WIDTH BWTN CURBS (FT)	OVERHANG WIDTH(FT)	EDGE OF SLAB TO CURB (FT)
0.00	20.00	2248.50	114.00	4.54	1.54

CONCRETE PROPERTIES

N1=24.00 N2= 8.00 UNIT WT OF CONC.= 150.00 LBS/CU FT

LIVE LOADING

LOADING TYPE HS-20 INTERSTATE CODE=1 DISTRIBUTION CODE=0

Note
1. Haunch width was based on the Assumption of 18" Top Flange. It should be 28" for Final Des. Top Flange but since we are conservative other loads are ok (See note)
2. Since we have a Median Barrier, the load due to Future Wearing Surface will be less than what the program [illegible]. Also Perm. Form load should be calculated as beam spacing minus Top Flange multiplied by the intensity of the load. The Prog. used beam spacing for this Calc. which is conservative.

URS Greiner

P.O. Box 31646
Tampa, FL 33630
(813) 286-1711

4.2.3/4A

JOB Maitland Blvd
DESCRIPTION

SHEET 1 OF 1 PROJ. NO. V100334.00
COMPUTED BY ADS DATE 1-14-98
CHECKED BY MSE DATE 1-30-98

BEAM DETAIL FACTOR

See Quantity Book 1,433,209

GIRDER & GIRDER SPLICE weight : 1433209 + ~~45,016.978~~ = 1,478,226 lb

DIAPHRAGMS STUDS, BOLTS, SOLE PLATES, & STIFFENERS :

19,401 +
11,002.313 + 27,690 + 10,616.667 + 45,017 = ~~149,308.98~~ lb 201,725

$$\% = \frac{201,725}{\cancel{149,308.98}\ \text{lb}} \cdot 100 = \cancel{10.1}\ 14.1\ \% < 15\% \text{ ok!}$$

1,478,226 lb
1,433,209

B6060 Input

INPUT VERIFICATION
****

DEFINITION OF STEEL SECTIONS

SEC NO.	SECTION	WEB DEPTH	WEB THICK	TOP PLATE WIDTH	TOP PLATE THICK	BOT PLATE WIDTH	BOT PLATE THICK	DECK REINF
1	0.0	112.00	0.6875	22.00	1.1250	26.00	1.7500	0.0
2	0.0	112.00	0.6875	22.00	2.2500	26.00	2.7500	0.0

DEFINITION OF CHANGES OF SECTION PER SPAN

SPAN NO	SEC NO	DIST	SEC NO	DIST	SEC NO	DIST	SEC NO	DIST	SEC NO	DIST	SEC NO	DIST	SEC NO	DIST	SEC NO	DIST
1	1	60.50	2	181.50	1	0.00	0	0.00	0	0.00	0	0.00	0	0.00	0	0.00

URS GREINER

PROGRAM
B6060
V4.5

CHK: ADS 1/14/98

4 OVER SR434 INTERIOR GIRDER DESIGN

(ENGLISH UNITS)

INPUT VERIFICATION
****

FATIGUE DATA		SHEAR CONNECTOR DATA		LOAD FACTOR DATA	
TYPE OF ROAD CASE 1, 2 OR 3	SHEAR CONN IN NEG MOM AREA 1-YES	NO SHEAR CONN PER TRANS SEC	SHEAR CONNECTOR DIAMETER	MOMENT REDIST 1-YES	LOAD FACTOR GAMA
2.	0.	3.	0.875	0.	1.300

Was used to match DRMP Calc. but further Calc. indicates 2 studs will work.

MATERIAL DATA

28-DAY CONCRETE STRENGTH	DIST FT	FY KSI	DIST FT	FY KSI	DIST FT	FY KSI	DIST FT	FY KSI	DIST FT	FY KSI	DIST FT	FY KSI
			DEFINITION OF CHANGE OF MATERIAL (STEEL)									
4.50	242.0	50.	0.0	0.	0.0	0.	0.0	0.	0.0	0.	0.0	0.

BEAM ANALYSIS AND DESIGN
B6060 PROGRAM OUTPUT
****

DEAD LOAD INFORMATION

SPAN NUMBER	SLAB+FORMS (K/FT)	STEEL (K/FT)	TOTAL D.L. (K/FT)	TOTAL S.D.L. (K/FT)
1	1.5150	0.6755	2.1905	0.3959

LIVE LOAD DISTRIBUTION FACTORS (LANE)

1.0909

LIVE LOAD DISTRIBUTION FACTORS (TRUCK)

09

CHK: ADS DATE: 1/14/98

SECTION PROPERTIES
****

SP NO	IN NO	SEC DEPTH (IN)	Bare Beam N=INFINITY I (IN4)	C(BOT) (IN)	N=24 I (IN4)	C(BOT) (IN)	N= 8 I (IN4)	C(BOT) (IN)	Q/I (1/IN)	N=NEG MOM I (IN4)	C(BOT) (IN)	Q/I (1/IN)
1	0	114.9	297273.	49.7	435756.	62.9	599621.	78.6	0.007	297273.	49.7	0.000
1	1	114.9	297273.	49.7	435756.	62.9	599621.	78.6	0.007	297273.	49.7	0.000
1	2	114.9	297273.	49.7	435756.	62.9	599621.	78.6	0.007	297273.	49.7	0.000
1	3	114.9	297273.	49.7	435756.	62.9	599621.	78.6	0.007	297273.	49.7	0.000
1	4	114.9	297273.	49.7	435756.	62.9	599621.	78.6	0.007	297273.	49.7	0.000
1	5	114.9	297273.	49.7	435756.	62.9	599621.	78.6	0.007	297273.	49.7	0.000
1	6	117.0	469187.	52.3	605018.	62.2	786367.	75.4	0.006	469187.	52.3	0.000
1	7	117.0	469187.	52.3	605018.	62.2	786367.	75.4	0.006	469187.	52.3	0.000
1	8	117.0	469187.	52.3	605018.	62.2	786367.	75.4	0.006	469187.	52.3	0.000
1	9	117.0	469187.	52.3	605018.	62.2	786367.	75.4	0.006	469187.	52.3	0.000
1	10	117.0	469187.	52.3	605018.	62.2	786367.	75.4	0.006	469187.	52.3	0.000
1	11	117.0	469187.	52.3	605018.	62.2	786367.	75.4	0.006	469187.	52.3	0.000
		117.0	469187.	52.3	605018.	62.2	786367.	75.4	0.006	469187.	52.3	0.000
		117.0	469187.	52.3	605018.	62.2	786367.	75.4	0.006	469187.	52.3	0.000
1	14	117.0	469187.	52.3	605018.	62.2	786367.	75.4	0.006	469187.	52.3	0.000
1	15	114.9	297273.	49.7	435756.	62.9	599621.	78.6	0.007	297273.	49.7	0.000
1	16	114.9	297273.	49.7	435756.	62.9	599621.	78.6	0.007	297273.	49.7	0.000
1	17	114.9	297273.	49.7	435756.	62.9	599621.	78.6	0.007	297273.	49.7	0.000
1	18	114.9	297273.	49.7	435756.	62.9	599621.	78.6	0.007	297273.	49.7	0.000
1	19	114.9	297273.	49.7	435756.	62.9	599621.	78.6	0.007	297273.	49.7	0.000
1	20	114.9	297273.	49.7	435756.	62.9	599621.	78.6	0.007	297273.	49.7	0.000

D_c = 65.175

94.8

URS GREINER

PROGRAM
B6060
V4.5

.4 OVER SR434 INTERIOR GIRDER DESIGN

PAGE 6
(ENGLISH UNITS)

CHK: ADS DATE: 1/14/98

LIVE LOAD MOMENTS (K-FT)
****

SPAN NO	INCR NO	DIST FROM L SUP.(FT)	LANE POS	LANE NEG	TRUCK POS	TRUCK NEG	INTERSTATE POS	INTERSTATE NEG
1	0	0.00	0.0	0.0	0.0	0.0	0.0	0.0
1	1	12.10	1359.9	0.0	984.2	0.0	678.0	0.0
1	2	24.20	2576.6	0.0	1860.5	0.0	1284.0	0.0
1	3	36.30	3650.2	0.0	2628.8	0.0	1818.0	0.0
1	4	48.40	4580.6	0.0	3289.0	0.0	2279.9	0.0
1	5	60.50	5367.9	0.0	3837.8	0.0	2670.0	0.0
1	6	72.60	6012.1	0.0	4285.6	0.0	2988.0	0.0
1	7	84.70	6513.1	0.0	4634.1	0.0	3234.0	0.0
1	8	96.80	6870.9	0.0	4878.0	0.0	3408.0	0.0
1	9	108.90	7085.6	0.0	5008.8	0.0	3507.1	0.0
1	10	121.00	7157.2	0.0	5052.3	0.0	3540.1	0.0
1	11	133.10	7085.6	0.0	5008.8	0.0	3507.1	0.0
1	12	145.20	6870.9	0.0	4878.0	0.0	3408.0	0.0
1	13	157.30	6513.1	0.0	4634.1	0.0	3234.0	0.0
	14	169.40	6012.1	0.0	4285.6	0.0	2988.0	0.0
	15	181.50	5367.9	0.0	3837.8	0.0	2670.0	0.0
1	16	193.60	4580.6	0.0	3289.0	0.0	2279.9	0.0
1	17	205.70	3650.2	0.0	2628.8	0.0	1818.0	0.0
1	18	217.80	2576.6	0.0	1860.5	0.0	1284.0	0.0
1	19	229.90	1359.9	0.0	984.2	0.0	678.0	0.0
1	20	242.00	0.0	0.0	0.0	0.0	0.0	0.0

MOMENT SUMMARY (K-FT)
****

SPAN NO	INCR NO	DIST FROM L SUP.(FT)	DL MOM	SDL MOM	LL+I MAX POS	LOAD TYPE	LL+I MAX NEG	LOAD TYPE
1	0	0.00	0.0	0.0	0.0	L	0.0	L
1	1	12.10	3046.8	550.6	1359.9	L	0.0	L
1	2	24.20	5772.8	1043.2	2576.6	L	0.0	L
1	3	36.30	8178.2	1477.9	3650.2	L	0.0	L
1	4	48.40	10262.8	1854.6	4580.6	L	0.0	L
1	5	60.50	12026.7	2173.4	5367.9	L	0.0	L
1	6	72.60	13470.0	2434.2	6012.1	L	0.0	L
1	7	84.70	14592.5	2637.0	6513.1	L	0.0	L
1	8	96.80	15394.2	2781.9	6870.9	L	0.0	L
1	9	108.90	15875.3	2868.8	7085.6	L	0.0	L
1	10	121.00	16035.7	2897.8	7157.2	L	0.0	L
1	11	133.10	15875.3	2868.8	7085.6	L	0.0	L
1	12	145.20	15394.2	2781.9	6870.9	L	0.0	L
1	13	157.30	14592.5	2637.0	6513.1	L	0.0	L
1	14	169.40	13470.0	2434.2	6012.1	L	0.0	L
	15	181.50	12026.7	2173.4	5367.9	L	0.0	L
	16	193.60	10262.8	1854.6	4580.6	L	0.0	L
1	17	205.70	8178.2	1477.9	3650.2	L	0.0	L
1	18	217.80	5772.8	1043.2	2576.6	L	0.0	L
1	19	229.90	3046.8	550.6	1359.9	L	0.0	L
1	20	242.00	0.0	0.0	0.0	L	0.0	L

CHK: ADS DATE 1/14/99

LIVE LOAD SHEARS (K)
****

SPAN NO	INCR NO	DIST FROM L SUP.(FT)	LANE POS	LANE NEG	TRUCK POS	TRUCK NEG	INTERSTATE POS	INTERSTATE NEG
1	0	0.00	128.2	0.0	85.8	0.0	59.0	0.0
1	1	12.10	117.7	-2.1	81.7	-2.8	56.3	-3.1
1	2	24.20	107.7	-4.8	77.5	-6.4	53.5	-6.2
1	3	36.30	98.0	-8.0	73.4	-11.5	50.7	-9.6
1	4	48.40	88.8	-11.7	69.2	-16.3	48.0	-12.9
1	5	60.50	80.0	-15.7	65.0	-21.1	45.2	-16.1
1	6	72.60	71.7	-20.2	60.8	-25.7	42.4	-19.1
1	7	84.70	63.7	-25.1	56.5	-30.3	39.6	-22.2
1	8	96.80	56.2	-30.5	52.3	-34.8	36.7	-25.1
1	9	108.90	49.1	-36.3	48.0	-39.2	33.9	-28.1
1	10	121.00	42.5	-42.5	43.6	-43.6	31.0	-31.0
1	11	133.10	36.3	-49.1	39.2	-48.0	28.1	-33.9
1	12	145.20	30.5	-56.2	34.8	-52.3	25.1	-36.7
1	13	157.30	25.1	-63.7	30.3	-56.5	22.2	-39.6
	14	169.40	20.2	-71.7	25.7	-60.8	19.1	-42.4
	15	181.50	15.7	-80.0	21.1	-65.0	16.1	-45.2
1	16	193.60	11.7	-88.8	16.3	-69.2	12.9	-48.0
1	17	205.70	8.0	-98.0	11.5	-73.4	9.6	-50.7
1	18	217.80	4.8	-107.7	6.4	-77.5	6.2	-53.5
1	19	229.90	2.1	-117.7	2.8	-81.7	3.1	-56.3
1	20	242.00	0.0	-128.2	0.0	-85.8	0.0	-59.0

CHK: ADS DATE 1/14/98

(COMPOSITE)
SHEAR SUMMARY (K)
****

SPAN NO	INCR. NO	DIST FROM L.SUP.(FT)	DL +SDL	LL+I MAX POS	LOAD TYPE	LL+I MAX NEG	LOAD TYPE	RANGE
1	0	0.00	313.0	128.2	L	0.0	L	128.22
1	1	12.10	281.7	117.7	L	-3.1	I	120.79
1	2	24.20	250.4	107.7	L	-6.4	HS	114.11
1	3	36.30	219.1	98.0	L	-11.5	HS	109.47
1	4	48.40	187.8	88.8	L	-16.3	HS	105.13
1	5	60.50	156.5	80.0	L	-21.1	HS	101.08
1	6	72.60	125.2	71.7	L	-25.7	HS	97.38
1	7	84.70	93.9	63.7	L	-30.3	HS	94.00
1	8	96.80	62.6	56.2	L	-34.8	HS	90.99
1	9	108.90	31.3	49.1	L	-39.2	HS	88.34
1	10	121.00	0.0	43.6	HS	-43.6	HS	87.21
1	11	133.10	-31.3	39.2	HS	-49.1	L	88.34
1	12	145.20	-62.6	34.8	HS	-56.2	L	90.99
1	13	157.30	-93.9	30.3	HS	-63.7	L	94.00
1	14	169.40	-125.2	25.7	HS	-71.7	L	97.38
1	15	181.50	-156.5	21.1	HS	-80.0	L	101.08
1	16	193.60	-187.8	16.3	HS	-88.8	L	105.13
1	17	205.70	-219.1	11.5	HS	-98.0	L	109.47
1	18	217.80	-250.4	6.4	HS	-107.7	L	114.11
1	19	229.90	-281.7	3.1	I	-117.7	L	120.79
1	20	242.00	-313.0	0.0	L	-128.2	L	128.22

REACTIONS (KIPS)
****

SUPP NO	D LOAD (1)	LIVE LOAD MAX LOAD (2)	TYPE	MIN LOAD (3)	TYPE	MAX+I (4)	MIN+I (5)	TOTAL (1+2)	TOTAL (1+4)	TOTAL (1+5)
1	313.0	112.8	L	0.0	L	128.2	0.0	425.8	441.2	313.0
2	313.0	112.8	L	0.0	L	128.2	0.0	425.8	441.2	313.0

CHK: ADS DATE: 1/14/98

DEAD LOAD DEFLECTIONS
****

SPAN NO	INCR. NO	DIST FROM L.SUP.(FT)	DEAD LOAD DEFLECTION (INCHES) STEEL	SLAB	SDL	TOTAL
1	0	0.00	0.0000	0.0000	0.0000	0.0000
1	1	12.10	-0.7191	-1.6127	-0.3105	-2.6422
1	2	24.20	-1.4108	-3.1640	-0.6101	-5.1848
1	3	36.30	-2.0505	-4.5987	-0.8888	-7.5381
1	4	48.40	-2.6165	-5.8680	-1.1381	-9.6226
1	5	60.50	-3.0898	-6.9295	-1.3504	-11.3697
1	6	72.60	-3.4753	-7.7941	-1.5256	-12.7949
1	7	84.70	-3.7837	-8.4858	-1.6657	-13.9352
1	8	96.80	-4.0086	-8.9901	-1.7679	-14.7666
1	9	108.90	-4.1453	-9.2969	-1.8301	-15.2723
1	10	121.00	-4.1912	-9.3998	-1.8509	-15.4420
1	11	133.10	-4.1453	-9.2969	-1.8301	-15.2723
1	12	145.20	-4.0086	-8.9901	-1.7679	-14.7666
1	13	157.30	-3.7837	-8.4858	-1.6657	-13.9352
	14	169.40	-3.4753	-7.7941	-1.5256	-12.7949
	15	181.50	-3.0898	-6.9295	-1.3504	-11.3697
1	16	193.60	-2.6165	-5.8680	-1.1381	-9.6226
1	17	205.70	-2.0505	-4.5987	-0.8888	-7.5381
1	18	217.80	-1.4108	-3.1640	-0.6101	-5.1848
1	19	229.90	-0.7191	-1.6127	-0.3105	-2.6422
1	20	242.00	0.0000	0.0000	0.0000	0.0000

(COMPOSITE)
MAXIMUM LIVE LOAD DEFLECTIONS
****

SPAN NO	DIST FROM L.SUPPORT (FT)	LL + I DEFLECTION (IN)	LOAD TYPE	1/800 OF SPAN LENGTH (IN)
1	121.00	-3.3389	L	3.63

STEEL STRESSES
****

CHK ADS DATE 1/11/7

A. DEAD LOAD

SPAN NO	INCR. NO	DIST FROM L.SUP.(FT)	DEAD LOAD STRESSES(KSI) TOP FLANGE	BOTTOM FLANGE
1	0	0.00	0.00	0.00
1	1	12.10	-8.02	6.11
1	2	24.20	-15.19	11.58
1	3	36.30	-21.52	16.40
1	4	48.40	-27.01	20.58
1	5	60.50	-31.65	24.12
1	6	72.60	-22.29	18.02
1	7	84.70	-24.14	19.52
1	8	96.80	-25.47	20.60
1	9	108.90	-26.27	21.24
1	10	121.00	-26.53	21.45
1	11	133.10	-26.27	21.24
1	12	145.20	-25.47	20.60
1	13	157.30	-24.14	19.52
1	14	169.40	-22.29	18.02
1	15	181.50	-31.65	24.12
1	16	193.60	-27.01	20.58
1	17	205.70	-21.52	16.40
1	18	217.80	-15.19	11.58
1	19	229.90	-8.02	6.11
1	20	242.00	0.00	0.00

CHK : ADS DATE : 1/14/9

B. SUPERIMPOSED DEAD LOAD

SPAN NO	INCR. NO	DIST FROM L.SUPPORT (FT)	SUPERIMPOSED DEAD LOAD STRESSES(KSI) COMPOSITE TOP FLG	COMPOSITE BOT FLG	NEG MOMENT TOP FLG	NEG MOMENT BOT FLG
1	0	0.00	0.00	0.00	0.00	0.00
1	1	12.10	-0.79	0.95	-1.45	1.10
1	2	24.20	-1.49	1.81	-2.75	2.09
1	3	36.30	-2.11	2.56	-3.89	2.96
1	4	48.40	-2.65	3.22	-4.88	3.72
1	5	60.50	-3.11	3.77	-5.72	4.36
1	6	72.60	-2.65	3.00	-4.03	3.26
1	7	84.70	-2.87	3.25	-4.36	3.53
1	8	96.80	-3.02	3.43	-4.60	3.72
1	9	108.90	-3.12	3.54	-4.75	3.84
1	10	121.00	-3.15	3.57	-4.79	3.88
1	11	133.10	-3.12	3.54	-4.75	3.84
1	12	145.20	-3.02	3.43	-4.60	3.72
1	13	157.30	-2.87	3.25	-4.36	3.53
1	14	169.40	-2.65	3.00	-4.03	3.26
	15	181.50	-3.11	3.77	-5.72	4.36
1	16	193.60	-2.65	3.22	-4.88	3.72
1	17	205.70	-2.11	2.56	-3.89	2.96
1	18	217.80	-1.49	1.81	-2.75	2.09
1	19	229.90	-0.79	0.95	-1.45	1.10
1	20	242.00	0.00	0.00	0.00	0.00

CHK: ADS DATE: 1/14/98

C. LIVE LOAD

SPAN NO	INCR. NO	DIST FROM L.SUPPORT (FT)	LIVE LOAD STRESSES(KSI) MAX POSITIVE TOP FLG	MAX POSITIVE BOT FLG	MAX NEGATIVE TOP FLG	MAX NEGATIVE BOT FLG
1	0	0.00	0.00	0.00	0.00	0.00
1	1	12.10	-0.99	2.14	0.00	0.00
1	2	24.20	-1.87	4.05	0.00	0.00
1	3	36.30	-2.65	5.74	0.00	0.00
1	4	48.40	-3.32	7.21	0.00	0.00
1	5	60.50	-3.89	8.45	0.00	0.00
1	6	72.60	-3.82	6.92	0.00	0.00
1	7	84.70	-4.14	7.49	0.00	0.00
1	8	96.80	-4.36	7.90	0.00	0.00
1	9	108.90	-4.50	8.15	0.00	0.00
1	10	121.00	-4.55	8.23	0.00	0.00
1	11	133.10	-4.50	8.15	0.00	0.00
1	12	145.20	-4.36	7.90	0.00	0.00
1	13	157.30	-4.14	7.49	0.00	0.00
1	14	169.40	-3.82	6.92	0.00	0.00
	15	181.50	-3.89	8.45	0.00	0.00
1	16	193.60	-3.32	7.21	0.00	0.00
1	17	205.70	-2.65	5.74	0.00	0.00
1	18	217.80	-1.87	4.05	0.00	0.00
1	19	229.90	-0.99	2.14	0.00	0.00
1	20	242.00	0.00	0.00	0.00	0.00

4.2.3/17

URS GREINER

PROGRAM
B6060
V4.5

CHK ADS MSE 5/26/98

14 OVER SR434 INTERIOR GIRDER DESIGN

PAGE 14
(ENGLISH UNITS)

MAXIMUM STRENGTH

SP NO	INCR NO	DIST FR L. SUPP (FT)	FACTORED MOMENT (K-FT)	SEC	SECTION CAPACITY (K-FT)	OLD	FACTORED STRESS T. FLG (KSI)	FACTORED STRESS B. FLG (KSI)	YIELD STRESS (KSI)	M/M_U
1	0	0.00	0.	C	38833.		N/A	N/A	50.00	= 0
1	1	12.10	7623.	C	38833.		N/A	N/A	50.00	= 0.196
1	2	24.20	14444.	C	38833.		N/A	N/A	50.00	= 0.372
1	3	36.30	20462.	C	38833.		N/A	N/A	50.00	= 0.527
1	4	48.40	25677.	C	38833		N/A	N/A	50.00	= 0.661
1	5	60.50	30091.	C	38833.		N/A	N/A	50.00	= 0.775 > 0.75 reduce V_U
1	6	72.60	33702.	C	51234.		N/A	N/A	50.00	= 0.658
1	7	84.70	36510.	C	51234.		N/A	N/A	50.00	= 0.713
1	8	96.80	38516.	C	51234.		N/A	N/A	50.00	= 0.752
1	9	108.90	39720.	C	51234.		N/A	N/A	50.00	= 0.775
1	10	121.00	40121.	C	51234.		N/A	N/A	50.00	= 0.783 > 0.75 reduce V_U
1	11	133.10	39720.	C	51234.		N/A	N/A	50.00	= 0.775
1	12	145.20	38516.	C	51234.		N/A	N/A	50.00	= 0.752
1	13	157.30	36510.	C	51234.		N/A	N/A	50.00	
1	14	169.40	33702.	C	51234.		N/A	N/A	50.00	
1	15	181.50	30091.	C	38833.		N/A	N/A	50.00	
	16	193.60	25677.	C	38833.		N/A	N/A	50.00	
	17	205.70	20462.	C	38833.		N/A	N/A	50.00	
1	18	217.80	14444.	C	38833.		N/A	N/A	50.00	
1	19	229.90	7623.	C	38833.		N/A	N/A	50.00	
1	20	242.00	0.	C	38833.		N/A	N/A	50.00	

NOTES 1 SEC C=COMPACT T=TRANSITION B=NON-COMPACT BRACED U=UNBRACED
K=BUCKLING(BOX) D=AASHTO 10.50(d) FAILS
X=PROJECTING FLANGE RATIO EXCEEDS ALLOWABLE
2 OLD O=OVERLOAD CRITERIA FAILS (AASHTO 10.57)

42,563 K-FT (See 4.2.5/21)

31,252 K-FT (See 4.2.5/17)

CHK: ADS DATE 1/14/98

STRESS RANGES

SP NO	INCR NO	DIST FR L. SUPP (FT)	TOP FLANGE ACTUAL (KSI)	T Y P	ALLOW * (KSI)	ALLOW ** (KSI)	BOTTOM FLANGE ACTUAL (KSI)	T Y P	ALLOW * (KSI)	ALLOW ** (KSI)
1	0	0.00	0.00	T	49.00	49.00	0.00	C	49.00	49.00
1	1	12.10	0.71	C	29.00	29.00	1.55	T	29.00	29.00
1	2	24.20	1.35	C	29.00	29.00	2.93	T	29.00	29.00
1	3	36.30	1.91	C	29.00	29.00	4.14	T	29.00	29.00
1	4	48.40	2.39	C	29.00	29.00	5.18	T	29.00	29.00
1	5	60.50	2.78	C	29.00	29.00	6.04	T	29.00	29.00
1	6	72.60	2.72	C	29.00	29.00	4.93	T	29.00	29.00
1	7	84.70	2.94	C	29.00	29.00	5.33	T	29.00	29.00
1	8	96.80	3.10	C	29.00	29.00	5.61	T	29.00	29.00
1	9	108.90	3.18	C	29.00	29.00	5.76	T	29.00	29.00
1	10	121.00	3.21	C	29.00	29.00	5.81	T	29.00	29.00
1	11	133.10	3.18	C	29.00	29.00	5.76	T	29.00	29.00
1	12	145.20	3.10	C	29.00	29.00	5.61	T	29.00	29.00
1	13	157.30	2.94	C	29.00	29.00	5.33	T	29.00	29.00
1	14	169.40	2.72	C	29.00	29.00	4.93	T	29.00	29.00
[illegible]	5	181.50	2.78	C	29.00	29.00	6.04	T	29.00	29.00
[illegible]	[illegible]	193.60	2.39	C	29.00	29.00	5.18	T	29.00	29.00
1	17	205.70	1.91	C	29.00	29.00	4.14	T	29.00	29.00
1	18	217.80	1.35	C	29.00	29.00	2.93	T	29.00	29.00
1	19	229.90	0.71	C	29.00	29.00	1.55	T	29.00	29.00
1	20	242.00	0.00	T	49.00	49.00	0.00	C	49.00	49.00

NOTES 1 * ALLOWABLE FOR BASE METAL
2 ** ALLOWABLE FOR COVER PLATE CUT-OFF COMPUTATION

CHK: ADS DATE 1/14/98

ACTUAL STRESSES (KSI)
****

SP NO	INCR NO	DIST FROM L.SUP.(FT)	TOP FLANGE DL,SDL,+LL	TOP FLANGE DL,SDL,-LL	BOTTOM FLANGE DL,SDL,+LL	BOTTOM FLANGE DL,SDL,-LL
1	0	0.00	0.00	0.00	0.00	0.00
1	1	12.10	-9.79	-8.81	9.20	7.06
1	2	24.20	-18.55	-16.68	17.44	13.39
1	3	36.30	-26.28	-23.64	24.71	18.96
1	4	48.40	-32.98	-29.66	31.01	23.80
1	5	60.50	-38.65	-34.76	36.33	27.89
1	6	72.60	-28.75	-24.93	27.94	21.03
1	7	84.70	-31.15	-27.01	30.27	22.78
1	8	96.80	-32.86	-28.49	31.93	24.03
1	9	108.90	-33.88	-29.38	32.93	24.78
1	10	121.00	-34.23	-29.68	33.26	25.03
1	11	133.10	-33.88	-29.38	32.93	24.78
1	12	145.20	-32.86	-28.49	31.93	24.03
1	13	157.30	-31.15	-27.01	30.27	22.78
1	14	169.40	-28.75	-24.93	27.94	21.03
1	15	181.50	-38.65	-34.76	36.33	27.89
1	16	193.60	-32.98	-29.66	31.01	23.80
1	17	205.70	-26.28	-23.64	24.71	18.96
1	18	217.80	-18.55	-16.68	17.44	13.39
1	19	229.90	-9.79	-8.81	9.20	7.06
1	20	242.00	0.00	0.00	0.00	0.00

4 OVER SR434 INTERIOR GIRDER DESIGN

CHK. MDS DATE 1/14/98

SP NO	INCR NO	DIST FROM L.SUP.(FT)	MAXIMUM SHEAR CONNECTOR SPACING(FT)	MAXIMUM STIFFENER SPACING(FT)	MAXIMUM LATERAL BRACING SPACING(FT) TOP FLANGE	BOT FLANGE
1	0	0.00	2.00	10.33	0.00	0.00
1	1	12.10	2.00	~~28.00~~	25.00	25.00
1	2	24.20	2.00	~~28.00~~ *	25.00	25.00
1	3	36.30	2.00	~~28.00~~	25.00	25.00
1	4	48.40	2.00	23.77	25.00	25.00
1	5	60.50	2.00	23.77	25.00	25.00
1	6	72.60	2.00	23.77	25.00	25.00
1	7	84.70	2.00	23.77	25.00	25.00
1	8	96.80	2.00	23.77	25.00	25.00
1	9	108.90	2.00	23.77	25.00	25.00
1	10	121.00	2.00	23.77	25.00	25.00
1	11	133.10	2.00	23.77	25.00	25.00
1	12	145.20	2.00	23.77	25.00	25.00
1	13	157.30	2.00	23.77	25.00	25.00
1	14	169.40	2.00	23.77	25.00	25.00
1	15	181.50	2.00	23.77	25.00	25.00
	16	193.60	2.00	23.77	25.00	25.00
	[illegible]	205.70	2.00	~~28.00~~	25.00	25.00
1	18	217.80	2.00	~~28.00~~ *	25.00	25.00
1	19	229.90	2.00	~~28.00~~	25.00	25.00
1	20	242.00	2.00	10.33	0.00	0.00

* should be 23.77' also
MSE 2/24/98

NOTES 1 SHEAR CONNECTOR SPACINGS ARE FOR FATIGUE REQUIREMENTS
2 NEGATIVE STIFFENER SPACING INDICATES LONGITUDINAL STIFFENERS ARE REQUIRED
3 IF THE DISTANCE BETWEEN THE D.L. COUNTERFLEXURE POINT AND THE ADJACENT SUPPORT IS LESS THAN THE LATERAL BRACING SPACING THEN THAT DISTANCE IS USED AS THE UNSUPPORTED LENGTH OF THE COMPRESSION FLANGE

4.2.3/21

CHK: ADS DATE: 1/14/98

REQUIRED NUMBER OF
SHEAR CONNECTORS
ULTIMATE STRENGTH
****

SPAN NO	LEFT SUPPORT TO MAX POS MOMENT	MAX POS MOMENT TO RIGHT SUPPORT
1	83	83

URS Greiner

JOB SR414 (Maitland Blvd.) over SR434 SHEET __ OF __ PROJ. NO V100334.00
DESCRIPTION COMPUTED BY MH DATE 8-22-97
CHECKED BY ADS DATE 1-14-98

GIRDER STABILITY

The Contractor will be Responsible for Girder Stability During Transportation and Erection. The Girder Stability Needs to be Checked under Non-Comp. Dead Loads Assuming Cross Frames are in Place and Girder is Braced @ 24.2' intervals.

SECTION 1 : (L = 60.5)

Top Flange 22"x1.125" ; Web = 112x0.6875

Check AASHTO Sec. 10.48.1 (Compact Sections)

a) $\frac{b'}{t} \leq \frac{2055}{\sqrt{F_y}}$; $\frac{(22-0.6875)/2}{1.125} = 9.472 > 9.2$

b) $\frac{D}{t_w} \leq \frac{19230}{\sqrt{F_y}}$; $\frac{112}{.6875} = 162.9 > 86$

Section is not Compact Does not need to check Lateral [illegible]
when non-composite

Check AASHTO Sec. 10.48.2 (Braced Non Compact Sections)

a) $\frac{b'}{t} \leq \frac{2200}{\sqrt{F_y}}$; $9.472 < 9.8$

b) $\frac{D_c}{t_w} \leq \frac{15,400}{\sqrt{F_y}}$; $\frac{64.075}{.6875} = 93.2 > 68.9$ ✓

$D_c = 114.9 - 49.7 - 1.125 = 64.075$ ✓

c) $L_b \leq \frac{20,000,000 A_f}{F_y d}$

$24.2 > \frac{20,000,000 \times (22 \times 1.125)}{50,000 \times 114.9} = 86.2" = 7.18'$

URS Greiner

JOB SR414 (Maitland Blvd.) over SR434 SHEET __ OF __ PROJ. NO V100334.00
DESCRIPTION _____ COMPUTED BY MH DATE 8-22-97
CHECKED BY ADS DATE 1-14-98

Check Section 10.48.4 of AASHTO (unbraced section) since Sec. 10.48.2 did not meet the Criteria.

$M_o = M_1 R_b$

$R_b = 1 - 0.002\left(\frac{D_c t_w}{A_{fc}}\right)\left[\frac{D_c}{t_w} - \frac{\lambda}{\sqrt{\frac{M_r}{S_{xc}}}}\right] \leq 1.0$

$\lambda = 12{,}500$ for $A_{fc} < A_{ft}$

$\frac{D_c}{t_w} = 93.6$ (See Prev. Sh.)

$\frac{\lambda}{\sqrt{F_y}} = \frac{12{,}500}{\sqrt{50{,}000}} = 55.9$

$\frac{18{,}250}{\sqrt{F_y}} = \frac{18{,}250}{\sqrt{50{,}000}} = 81.62$

$\frac{D_c}{t_w} = 93.6 > 81.6 \Rightarrow$ Check AASHTO 10.50 (d)

$\frac{D}{t_w} < \frac{36500}{\sqrt{F_y}}$; $\frac{112}{.6875} = 162.9 < 163.2$ ok.

Since AASHTO 10.50 (d) Requirement is met the upper limit of $\frac{18{,}250}{\sqrt{F_y}}$ may be waived for Composite Girders.

$L_b = 24.20$

$L_p = 9500 r'/\sqrt{F_y}$ where r' = Radius of Gyration of Compression Flange about the vertical axis in the Plane of the web.

$L_p = 9500 \times 6.35''/\sqrt{50{,}000}$

$L_p = 269.8'' = 22.48$ $\quad r' = \sqrt{\frac{1/12(22)^3 \times 1.125}{22 \times 1.125}} = 6.35''$

$L_b = 24.2 > L_p = 22.48$

URS Greiner

JOB SR 414 (Maitland Blvd.) over SR 434 SHEET __ OF __ PROJ. NO V106334.00
DESCRIPTION _____ COMPUTED BY MH DATE 8-22-97
CHECKED BY MSE DATE 2-25-98

$$L_r = \left(\frac{572\times10^6\, I_{yc}\, d}{F_y S_{xc}}\right)^{1/2}$$

$$I_{yc} = \frac{1}{12}bh^3 = \frac{1}{12}\times 1.125\times 22^3 = 998.25 \text{ in}^4$$

$$S_{xc} = \frac{297273}{(114.9-49.7)} = 4{,}559.4 \text{ in}^3, \qquad M_y = S_{xc}\times F_y = 227{,}970 \text{ k-in} = 18{,}998 \text{ k-ft}$$

$$L_r = \left(\frac{572\times10^6\times998.25\times114.9}{50{,}000\times4{,}559.4}\right)^{1/2} = 536.5'' = 44.7 \text{ ft}$$

$$L_r = 44.7 > L_b = 24.2 > L_p = 22.48$$

$$M_r = C_b F_y S_{xc}\left[1-0.5\left(\frac{L_b-L_p}{L_r-L_p}\right)\right]$$

$$C_b = 1.75 + 1.05\left(\frac{M_1}{M_2}\right) + 0.3\left(\frac{M_1}{M_2}\right)^2 \le 2.3$$

$M_1 = 10{,}262.8$ ft-k (B6060 Page 7)

$M_2 = 13470.0$ ft-k (B6060 Page 7)

$$C_b = 1.75 + 1.05\left(\frac{-10{,}262.8}{13470.0}\right) + 0.3\left(\frac{-10{,}262.8}{13{,}470.0}\right)^2 = 1.124$$

$$M_r = 1.124\times50\times4{,}559.4\left[1-0.5\left(\frac{24.2-22.48}{44.7-22.48}\right)\right]\times\frac{1}{12} = 20{,}526.7 \text{ ft-k} > M_y$$

$\therefore M_r = 18{,}998$ k-ft

$$R_b = 1-0.002\left(\frac{D_c t_w}{A_{fc}}\right)\left[\frac{D_c}{t_w} - \frac{\lambda}{\sqrt{\frac{M_r}{S_{xc}}}}\right] \le 1.0$$

$$R_b = 1-0.002\left(\frac{64.075\times.6875}{22\times1.125}\right)\left[\frac{64.075}{.6875} - \frac{12{,}500}{\sqrt{\frac{20{,}526.7\times12000}{4559.4}}}\right] = 0.8597$$

$$M_u = R_b M_r = 0.8597\times \cancel{20{,}526.7}\ 18{,}998 = \cancel{17{,}646.2}\ 16{,}332 \text{ ft-k}$$

M_{DL} @ 60.5 $= 12{,}026.7$

$M_u = 1.3\times12{,}026.7 = 15{,}634.7$ ft-k $<$ ~~17,646.2~~ 16,332 ft-k OK. ✓

Note: Spacing has changed from 24.2' to 23.75' since the panels are placed closer. Section is OK.

Quarter Point

URS Greiner

JOB SR414 (Maitland Blvd.) Over SR434 SHEET __ OF __ PROJ. NO V100334.00
DESCRIPTION COMPUTED BY MH DATE 8/22/97
CHECKED BY ASE DATE 1/11/98

Plastic Section Modulus Z

SEC. @ Mid Span – Follow AASHTO APP. D

		Area
Top Flange	= 22x2.25	49.5
Web	= 112x.6875	77.0
Bot Flange	= 26x2.75	71.5
		198.0 in²

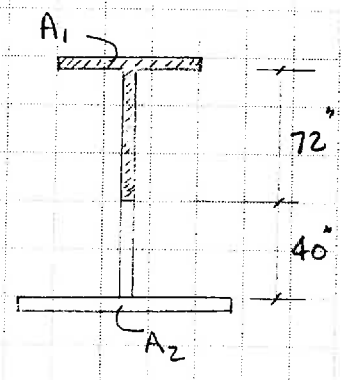

$A_1 = A_2 = \frac{A}{2} = \frac{198}{2} = 99.0 \text{ in}^2$

Portion of Web included in $A_1 = \frac{99.0 - 49.5}{.6875} = 72''$

Find Centroid of A_1 – Ref. line Top Flange

	Sec.	A	Y	AY
Top Flg	22x2.25	49.5	1.125	55.6875
Web	72x0.6875	49.5	38.25	1893.375
		99.0		1949.0625

$\bar{Y}_{TOP} = \frac{1949.0625}{99.0} = 19.6875$

FIND Centroid of A_2 – Ref. line Bot Flange

Sec.	A	Y	AY
26x2.75	71.5	1.375	98.3125
40x.6875	27.5	22.75	625.625
	99.0		723.9375

$\bar{Y}_{BOT} = \frac{723.9375}{99.0} = 7.3125''$

$a = 117.0 - 19.6875 - 7.3125 = 90''$

$Z = 99 \times 90 = 8{,}910 \text{ in}^3$

URS Greiner

JOB SR414 (Maitland Blvd.) over SR 434 SHEET __ OF __ PROJ. NO V100334.00
DESCRIPTION COMPUTED BY MH DATE 8-22-97
CHECKED BY ADS DATE 1-14-98

Check Sec. @ Midspan (L = 121.0)

Top Plate = 22 x 2.25 $A_F = 49.5\ in^2$
Web = 112 x 0.6875

Check AASHTO Sec. 10.48.1 (Compact Sections)

a) $\frac{b'}{t} \le \frac{2055}{\sqrt{F_Y}}$; $\frac{(22-.6875)/2}{2.25} = 4.74 < 9.2$.

b) $\frac{D}{t_w} \le \frac{19,230}{\sqrt{F_Y}}$; $\frac{112}{.6875} = 162.9 > 86$.

c) $\frac{L_b}{r_Y} \le \frac{[3.6 - 2.2(M_1/M_U)] \times 10^6}{F_Y}$

$r_Y = \sqrt{\frac{I}{A}} = \sqrt{\frac{1/12 \times 2.25 \times 22^3}{22 \times 2.25}} = 6.35$.

$M_1 = 15,394.2$ ft-k x 1.3 = 20,012.46 ft-k .

$M_U = F_Y Z = 50 \times 8,910 \times \frac{1}{12} = 37,125$ ft-k .

$\frac{25.0 \times 12}{6.35} = 47.24 < \frac{[3.6 - 2.2(\frac{20,012.46}{37,125})] \times 10^6}{50,000} = 48.28$.

Since $D/t_w > 86$ Section NOT Compact
when non-composite

Check AASHTO Sec. 10.48.2 (Braced Non Compact Section)

a) $\frac{b'}{t} \le \frac{2200}{\sqrt{F_Y}}$; $4.74 < 9.8$.

b) $\frac{D_c}{t_w} \le \frac{15400}{\sqrt{F_Y}}$; $\frac{64.7}{.6875} = 94.1 > 68.9$

$D_c = 117 - 52.3 = 64.7''$

c) $L_b \le \frac{20,000,000\ A_F}{F_Y d}$

$25.0' > \frac{20,000,000 \times 49.5}{50,000 \times 117} = 169.23'' = 14.1'$.

URS Greiner

JOB SR414 (Maitland Blvd.) over SR434 SHEET __ OF __ PROJ. NO V100334.00
DESCRIPTION COMPUTED BY MH DATE 8-22-97
CHECKED BY ADS DATE 1-14-98

Check ~~Station~~ SECTION 10.48.4 of AASHTO (unbraced Section) since sec. 10.48.2 did not meet the Criteria.

$M_u = M_r R_b$

$R_b = 1 - 0.002\left(\frac{D_c t_w}{A_{Fc}}\right)\left[\frac{D_c}{t_w} - \frac{\lambda}{\sqrt{\frac{M_r}{S_{xc}}}}\right] \leq 1.0$

$\lambda = 12,500$ for $A_{Fc} < A_{Ft}$

$\frac{D_c}{t_w} = 94.1$ (See Prev. Sh.).

$\frac{\lambda}{\sqrt{F_y}} = \frac{12,500}{\sqrt{50,000}} = 55.9$

$\frac{18,250}{\sqrt{F_y}} = \frac{18250}{\sqrt{50,000}} = 81.62$

$\frac{D_c}{t_w} = 94.1 > 81.6 \Rightarrow$ Check AASHTO 10.50(d)

$\frac{D}{t_w} < \frac{36500}{\sqrt{F_y}}$; $\frac{112}{.6875} = 162.9 < 163.2$ OK

Since AASHTO 1050(d) Requirement is not the upper limit of $\frac{18,250}{\sqrt{F_y}}$ may be waived for Composite Girders.

$L_b = 25.0$

$L_p = 9500\, r'/\sqrt{F_y}$ Where r' = Radius of gyration of Compression Flange about the vertical axis in the Plane of the Web.

$L_p = 9500 \times 6.35/\sqrt{50,000}$

$L_p = 269.8'' = 22.48'$. $r' = \sqrt{\frac{1/12\,(22)^3 \times 2.25}{49.5}} = 6.35$.

$L_b = 25.0 > L_p = 22.48'$.

URS Greiner

JOB SR414 (Maitland Blvd.) over SR434 SHEET __ OF __ PROJ. NO V100334.00
DESCRIPTION _____ COMPUTED BY MH DATE 8-22-97
CHECKED BY ADS DATE 1-14-98

$$L_r = \left(\frac{572\times10^6 I_{yc} d}{F_y S_{xc}}\right)^{1/2}$$

$$I_{yc} = \frac{1}{12} bh^3 = \frac{1}{12}\times 2.25\times 22^3 = 1{,}996.5 \text{ in}^4$$

$$S_{xc} = \frac{469187}{(117-52.3)} = 7{,}251.7 \text{ in}^3$$

$$L_r = \left(\frac{572\times10^6\times 1996.5\times 117.0}{50{,}000\times 7251.7}\right)^{1/2} = 607.0'' = 50.59'$$

$$L_r = 50.59' > L_b = 25.0' > L_p = 22.48'$$

$$M_r = C_b F_y S_{xc}\left[1-0.5\left(\frac{L_b-L_p}{L_r-L_p}\right)\right]$$

$$C_b = 1.75 + 1.05\left(\frac{M_1}{M_2}\right) + 0.3\left(\frac{M_1}{M_2}\right)^2 \le 2.3$$

$M_1 = 15{,}394.2$ ft-k (Sh.7 B6060)

$M_2 = 16{,}035.7$ ft-k

$$C_b = 1.75 + 1.05\left(\frac{-15{,}394.2}{16{,}035.7}\right) + 0.3\left(\frac{15{,}394.2}{16{,}035.7}\right)^2 = 1.018$$

$$M_r = 1.018\times 50\times 7{,}251.7\left[1-0.5\left(\frac{25.0-22.48}{50.59-22.48}\right)\right]\times\frac{1}{12} = 29{,}380.5$$

$$R_b = 1-0.002\left(\frac{D_c t_w}{A_{fc}}\right)\left[\frac{D_c}{t_w} - \frac{\lambda}{\sqrt{\frac{M_r}{S_{xc}}}}\right] \le 1.0$$

$$R_b = 1-0.002\left(\frac{64.7\times .6875}{49.5}\right)\left[\frac{64.7}{.6875} - \frac{12500}{\sqrt{\frac{29{,}380.5\times 12000}{7251.7}}}\right] = 0.933$$

$M_u = R_b M_r = 0.933\times 29{,}380.5 = 27{,}412.0$ ft-k

M_{DL} @ 121.0' from Support = 16035.7 ft-k

$M_u = 16035.7\times 1.3 = 20{,}846.4 < 27{,}412.0$ ft-k OK

SECTION IS OK.

Midspan

URS Greiner

JOB SR414 (Maitland Blvd.) over SR434 SHEET __ OF __ PROJ. NO V100334.00
DESCRIPTION _____ COMPUTED BY MH DATE 8-22-97
CHECKED BY ADS DATE

Composite Section – Section 60.5' From Support

Check AASHTO Sec. 10.50.1.1

TF = 22×1.125
Web = 112×.6875
BF = 26×1.75

a) 1. $C = 0.85 f'_c b t_s + (AF_y)_c$

$C = .85 \times 4.5 \times 96'' \times 8'' + 0 = 2{,}937.6^k$ ← Controls

2. $C = (AF_y)_{bf} + (AF_y)_{tf} + (AF_y)_w$

$C = (45.5 \times 50) + (24.75 \times 50) + (77.0 \times 50) = 7362.5^k$

b) $a = \dfrac{C - (AF_y)_c}{0.85 f'_c b} = \dfrac{2{,}937.6}{.85 \times 4.5 \times 96} = 8.0''$

c) $C' = \dfrac{\Sigma(AF_y) - C}{2}$

$C' = \dfrac{7362.5 - 2937.6}{2} = 2{,}212.5$

$(AF_y)_{TF} = 22 \times 1.125 \times 50 = 1237.5$

$C' = 2{,}212.5 > (AF_y)_{TF} = 1237.5$

$\bar{y} = t_{tf} + \dfrac{C' - (AF_y)_{tf}}{(AF_y)_w} D$

$\bar{y} = 1.125 + \dfrac{2{,}212.5 - 1237.5}{3850} \times 112 = 29.49''$

$\dfrac{2D_{cp}}{t_w} \leq \dfrac{19{,}230}{\sqrt{F_y}}$

$\dfrac{2 \times (29.49 - 1.125)}{0.6875} = 82.51 < 86.0$

$\dfrac{D_p}{D'} \leq 5$ (10-129a AASHTO)

$D' = \dfrac{\beta(d + t_s + t_h)}{7.5} = \dfrac{0.7(114.9 + 8 + 1.875)}{7.5} = 11.65$

URS Greiner

JOB SR414 (Maitland Blvd.) over SR434 SHEET __ OF __ PROJ. NO V100334.00
DESCRIPTION _____ COMPUTED BY MH DATE 8-22-97
CHECKED BY ADS DATE 1-15-98

Composite Section Check @ 60.5' From Support

$D_p = 8" + 1.875 + 29.49" = 39.37"$

$\frac{D_p}{D'} = \frac{39.37"}{11.65} = 3.38 < 5$, ∴ Section is Compact

(when composite

URS Greiner

JOB SR 414 (Maitland Blvd) over SR434 SHEET __ OF __ PROJ. NO V100334.00
DESCRIPTION COMPUTED BY MH DATE 8-22-97
CHECKED BY ADS DATE 1-15-98

Composite Section - Section @ Midspan

Check AASHTO Sec. 10.50.1.1

TF = 22 x 2.25
Web = 112 x .6875
BF = 26 x 2.75

a)

1. $C = 0.85 f'_c b t_s + (AF_y)_c$

$C = .85 \times 4.5 \times 96'' \times 8'' + 0 = 2{,}937.6$ ← Controls

2. $C = (AF_y)_{bf} + (AF_y)_{TF} + (AF_y)_w$

$C = (71.5 \times 50) + (49.5 \times 50) + (77 \times 50) = 9{,}900^k$

b) $a = \dfrac{C - (AF_y)_c}{.85 f'_c b} = \dfrac{2{,}937.6}{.85 \times 4.5 \times 96} = 8.0''$

c) $C' = \dfrac{\Sigma(AF_y) - C}{2}$

$C' = \dfrac{9{,}900 - 2{,}937.6}{2} = 3{,}481.2^k$

$(AF_y)_{tf} = 22 \times 2.25 \times 50 = 2475.0^k$

$C' = 3{,}481.2^k > (AF_y)_{tf} = 2{,}475^k$

$\bar{Y} = t_{tf} + \dfrac{C' - (AF_y)_{tf}}{(AF_y)_w} D$

$\bar{Y} = 2.25 + \dfrac{3{,}481.2 - (2475.0)}{3850} \times 112 = 31.52''$

$\dfrac{2 D_{cp}}{t_w} \leq \dfrac{19{,}230}{\sqrt{F_y}}$

$\dfrac{2 \times (31.52 - 2.25)}{.6875} = 85.15 < 86.0$

$\dfrac{D_p}{D'} \leq 5$ (AASHTO Eq. 10-129a)

URS Greiner

JOB SR414 (Maitland Blvd) over SR434 SHEET __ OF __ PROJ. NO V100334.00
DESCRIPTION COMPUTED BY MH DATE 8-22-97
CHECKED BY ADS DATE 1-15-98

Composite Section Check @ Midspan

$$D' = \frac{\beta(d+t_s+t_h)}{7.5} = \frac{0.7(117+8+0.75)}{7.5} = 11.74''$$

$$D_p = 8'' + 0.75'' + 31.52'' = 40.27''$$

$$\frac{D_p}{D'} = \frac{40.27}{11.74} = 3.43 < 5$$

∴ Section is Compact.

(when composite

4.2.5/12

1 of 7

(a) The maximum strength of any section shall not be less than the sum of the computed moments at that section multiplied by the appropriate load factors.
(b) The web of the steel section shall be designed to carry the total external shear and must satisfy the applicable provisions of Articles 10.48 and 10.49. In such application the value of D_c shall be taken as the clear distance between the neutral axis of the composite section for live loads and the compression flange.
(c) The ratio of the projecting top compression flange plate width to thickness shall not exceed the value determined by the formula:

$$\frac{b'}{t} = \frac{2{,}200}{\sqrt{1.3 f_{dtl}}} \qquad (10\text{-}122)$$

where f_{dtl} is the top-flange compressive stress due to noncomposite dead load.
(d) The maximum moment capacity of noncompact sections when considering noncomposite dead loads with a load factor of $\gamma = 1.3$ shall be computed by Article 10.48.4.1, except that D_c/t_w of the steel section may exceed $\frac{18{,}250}{\sqrt{F_y}}$ but D/t_w shall not exceed $\frac{36{,}500}{\sqrt{F_y}}$ for girders without longitudinal stiffeners. D_c/t_w of the steel section shall not exceed $\frac{36{,}500}{\sqrt{F_y}}$ for girders with longitudinal stiffeners.
(e) The maximum shear due to noncomposite dead load with a load factor of $\gamma = 1.3$ shall not exceed the shear buckling capacity of the web in Article 10.48.8.1 (Equation 10-~~112~~). 113
(f) The moment capacity at first yield shall be computed considering the application of the dead and live loads to the steel and composite sections.
(g) The casting or placing sequence for the composite concrete deck should be considered in meeting the requirements of Articles 10.50(c), 10.50(d), and 10.50(e).

Check B6060 Mu Capacity

10.50.1 Positive Moment Sections of Composite Beams and Girders

10.50.1.1 Compact Sections

The maximum strength, M_u, of compact composite beams and girders in the positive-moment regions shall be computed in accordance with Article 10.50.1.1.2. The stress-strain diagram of the steel shall exhibit a yield plateau followed by a strain-hardening range.

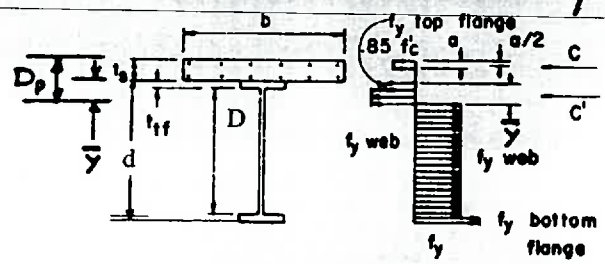

FIGURE 10.50A

Steels such as AASHTO M 270 Grades 36, 50, and 50W (ASTM A 709 Grades 36, 50, and 50W) meet these requirements.

10.50.1.1.1 The resultant moment of the fully plastic stress distribution (Figure 10.50A) may be computed as follows:

(a) The compressive force in the slab, C, is equal to the smallest of the values given by the following Equations:

(1) $$C = 0.85 f'_c\, b t_s + (AF_y)_c \qquad (10\text{-}123)$$

where b is the effective width of slab, specified in Article 10.38.3, t_s is the slab thickness, and $(AF_y)_c$ is the product of the area and yield point of that part of reinforcement which lies in the compression zone of the slab.

(2) $$C = (AF_y)_{bf} + (AF_y)_{tf} + (AF_y)_w \qquad (10\text{-}124)$$

where $(AF_y)_{bf}$ is the product of area and yield point for bottom flange of steel section (including cover plate if any), $(AF_y)_{tf}$ is the product of area and yield point for top flange of steel section, and $(AF_y)_w$ is the product of area and yield point for web of steel section.
(b) The depth of the stress block is computed from the compressive force in the slab.

$$a = \frac{C - (AF_y)_c}{0.85 f'_c b} \qquad (10\text{-}125)$$

(c) When the compressive force in the slab is less than the value given by Equation (10-123), the top portion of the steel section will be subjected to the compressive force on the next page:

$$C' = \frac{\Sigma(AF_y) - C}{2} \qquad (10\text{-}126)$$

(d) The location of the neutral axis within the steel section measured from the top of the steel section may be determined as follows:

for $C' < (AF_y)_{tf}$

$$\bar{y} = \frac{C'}{(AF_y)_{tf}} t_{tf} \qquad (10\text{-}127)$$

for $C' \geq (AF_y)_{tf}$

$$\bar{y} - t_{tf} + \frac{C' - (AF_y)_{tf}}{(AF_y)_w} D \qquad (10\text{-}128)$$

(e) The maximum strength of the section in bending is the first moment of all forces about the neutral axis, taking all forces and moment arms as positive quantities.

10.50.1.1.2 Composite beams and girders in positive-moment regions shall qualify as compact when the web of the steel section satisfies the following requirement:

$$\frac{2D_{cp}}{t_w} \leq \frac{19{,}230}{\sqrt{F_y}} \qquad (10\text{-}129)$$

where D_{cp} is the depth of the web in compression at the plastic moment calculated in accordance with Article 10.50.1.1.1, and t_w is the web thickness. Equation (10-129) is satisfied if the neutral axis at the plastic moment is located above the web; otherwise D_{cp} shall be computed as $\bar{y}$ from Equation (10-128) minus t_{tf}. Also, the distance from the top of the slab to the neutral axis at the plastic moment, D_p, shall satisfy:

$$\left(\frac{D_p}{D'}\right) \leq 5 \qquad (10\text{-}129a)$$

where:

$D' = \beta \dfrac{(d + t_s + t_h)}{7.5}$;

β = 0.9 for F_y = 36,000 psi;
= 0.7 for F_y = 50,000 psi;

d = depth of the steel beam or girder;

t_s = thickness of the slab;

t_h = thickness of the concrete haunch above the beam or girder top flange.

Equation (10-129a) need not be checked for sections where the maximum flange stress does not exceed the specified minimum flange yield stress.

The maximum bending strength, M_u, of compact composite beams and girders in simple spans or in the positive-moment regions of continuous spans with compact noncomposite or composite negative-moment pier sections shall be taken as:

for $D_p \leq D'$

$$M_u = M_p \qquad (10\text{-}129b)$$

for $D' < D_p \leq 5D'$

3/96

$$M_u = \frac{5M_p - 0.85M_y}{4} + \frac{0.85M_y - M_p}{4}\left(\frac{D_p}{D'}\right) \qquad (10\text{-}129c)$$

where:

M_p = plastic moment capacity of the composite positive moment section calculated in accordance with Article 10.50.1.1.1;

M_y = moment capacity at first yield of the composite positive moment section calculated as F_y times the section modulus with respect to the tension flange. The modular ratio, n, shall be used to compute the transformed section properties.

In continuous spans with compact composite positive-moment sections, but with noncompact noncomposite or composite negative-moment pier sections, the maximum bending strength, M_u, of the composite positive-moment sections shall be taken as either the moment capacity at first yield determined as specified in Article 10.50(f), or as:

$$M_u = M_y + A(M_u - M_s)_{pier} \qquad (10\text{-}129d)$$

where:

M_y = the moment capacity at first yield of the compact positive moment section calculated in accordance with Article 10.50(f);

$(M_u - M_s)_{Pier}$ = Moment capacity of the noncompact section at the pier, M_u, given by Article 10.48.2 or Article 10.48.4, minus the elastic moment at the pier, M_s, for the loading producing maximum positive bending in the span. Use the smaller value of the difference for the two-pier sections for interior spans;

A = 1 for interior spans;
= Distance from end support to the location of maximum positive moment divided by the span length for end spans.

M_u computed from Equation (10-129d) shall not exceed the applicable value of M_u computed from either Equation (10-129b) or Equation (10-129c).

For continuous spans where the maximum bending strength of the positive-moment sections is determined

URS Greiner

JOB SR 414 (Maitland Blvd.)
DESCRIPTION
SHEET 3 OF 7 PROJ. NO V100334.00
COMPUTED BY MSE DATE 5/21/98
CHECKED BY S.H DATE 5/26/98

Composite Moment Capacity at L= 60.5' (Quarter Pt)

4.2.5/9

39.37" 11.65"

Since $D_p > D'$ but $D' < D_p \leq 5D'$

$$M_u = \left(\frac{5M_p - 0.85M_y}{4}\right) + \left(\frac{0.85M_y - M_p}{4}\right)\left(\frac{D_p}{D'}\right) \quad (10\text{-}129c)$$

Where

$$M_y = 1.3(M_{DL} + M_{SDL}) + 2.17\left(50^{ksi} - \frac{1.3M_{DL}}{S_{oo}} - \frac{1.3M_{SDL}}{S_{3N}}\right)\frac{S_N}{2.17}$$

4.025 K-FT

4.2.3/10 4.2.3/8

$$= 1.3(12{,}026.1 + 2{,}173.4)^{K\text{-}FT}$$

$$+ 2.17\left[50^{ksi} - \left(\frac{1.3 * 12{,}026.7^{K\text{-}FT} * 49.7^{IN} * 12^{IN}/FT}{297{,}273^{IN^4}}\right) - \left(\frac{1.3 * 2{,}173.4^{K\text{-}FT} * 62.9^{IN} * 12^{IN}/FT}{435{,}756^{IN^4}}\right)\right]\left(\frac{599{,}621^{IN^4}}{2.17 * 78.6^{IN}}\right)\left(\frac{FT}{12^{IN}}\right)$$

$$M_y = 27{,}194^{K\text{-}FT}$$

Overall Structure Depth = 124.75"

4.2.5/7

$$M_p = \Big\{(A_{BF} * f_y)\, d_{NA\,BF} + [(D_{SD} - D_p - t_{BF}) * t_{web} * f_y]\, d_{NA,B,web}$$

$$+ [(D_p - t_s - t_{tf}) * t_{web} * f_y]\, d_{NA\,T.web}$$

$$+ (A_{TF} * f_y)\, d_{NA\,TF} + (.85 f'_c\, b\, a)\, d_{NA\,SLAB}\Big\} / 12^{IN}/FT$$

$$= \Big\{[(26" * 1.75" * 50^{ksi})](124.75" - \tfrac{1.75"}{2} - 39.37")$$ Bottom Flange

16,928.7

$$+ [(124.75" - 39.37" - 1.75") * \tfrac{11"}{16} * 50^{ksi}](83.63"/2)$$ Web below NA

83.63" 28.37" 16,917.4

$$+ [(39.37" - 11") * \tfrac{11"}{16} * 50^{ksi}](28.37"/2)$$ Web above NA

1,152.7

$$+ [(22" * 1\tfrac{1}{8}") * 50^{ksi}](39.37" - 11" + \tfrac{1\tfrac{1}{8}"}{2})$$ Top Flange

2,983.7

$$+ [(.85(4.5^{ksi}) * 96" * 8")(39.37" - \tfrac{8"}{2})\Big\} / 12^{IN}/FT$$ Concrete

8,638.7 4.2.5/8

$$M_p = 38{,}833^{K\text{-}FT}$$

B6060 M_u Value

URS Greiner

JOB SR 414 (Maitland Blvd) SHEET 4 OF 7 PROJ. NO V100334.00
DESCRIPTION
COMPUTED BY MSE DATE 5/21/98
CHECKED BY S. H DATE 5/26/98

Composite Moment Capacity at L=60.5'

42,762.5

$$M_u = \left(\frac{5.*38{,}833.^{K\text{-}FT} - 0.85.*27{,}194.^{K\text{-}FT}}{4.}\right) + \left(\frac{0.85.*27{,}194.^{K\text{-}FT} - 38{,}833.^{K\text{-}FT}}{4.}\right)\left(\frac{39.37''.}{11.65''.}\right)$$

$M_u = 29{,}483.^{K\text{-}FT} < 30{,}091.^{K\text{-}FT}$ N.G.

4.2.3/17

Since only 2% over recalculate M_p with the slab rebar included. This should increase M_u enough to be $> 30{,}091^{K\text{-}FT}$.

Could also increase M_y by including slab rebar in the elastic section properties, but should not be necessary if M_p increases enough.

Composite Mom. Cap. at L=60.5 including Rebar

Composite Section - SECTION 60.5' From Support

Check AASHTO Sec. 10.50.1.1

TF = 22×1.125
10#5's + 8#4's = 4.70 in²
Web = 112×.6875
BF = 26×1.75

a) 1. $C = 0.85 f'_c b t_s + (AF_y)_c$

$b_{eff} = 12 \times 8''$

$C = (.85 \times 4.5 \times 96'' \times 8'') + (4.70^{IN^2} \times 60^{KSI}) = 3{,}219.6$ ← Controls

2. $C = (AF_y)_{bf} + (AF_y)_{tf} + (AF_y)_w$

$C = (45.5 \times 50) + (24.75 \times 50) + (77.0 \times 50) = 7362.5^k$

b) $a = \dfrac{C - (AF_y)_c}{0.85 f'_c b} = \dfrac{3{,}219.6 - (4.70 \times 60)}{.85 \times 4.5 \times 96} = 8.0''$

c) $C' = \dfrac{\Sigma(AF_y) - C}{2}$

$C' = \dfrac{7362.5 - 3{,}219.6}{2} = 2{,}071.5$

$(AF_y)_{TF} = 22 \times 1.125 \times 50 = 1237.5$

$C' = 2{,}071.5 > (AF_y)_{TF} = 1237.5$

$\bar{Y} = t_{tf} + \dfrac{C' - (AF_y)_{tf}}{(AF_y)_w} D$

$\bar{Y} = 1.125 + \dfrac{2{,}071.5 - 1237.5}{3850} \times 112 = 25.39''$

$\dfrac{2D_{cp}}{t_w} \leq \dfrac{19{,}230}{\sqrt{F_y}}$

$\dfrac{2 \times (25.39 - 1.125)}{0.6875} = 70.59 < 86.0$

$\dfrac{D_p}{D'} \leq 5$ (10-129a AASHTO).

$D' = \dfrac{\beta(d + t_s + t_h)}{7.5} = \dfrac{0.7(114.9 + 8 + 1.875)}{7.5} = 11.65$

URS Greiner 4.2.5/17

JOB SR414 (Maitland Blvd.) over SR434 SHEET 6 OF 7 PROJ. NO V100334.00
DESCRIPTION COMPUTED BY MSE DATE 5/22/98
CHECKED BY S.H DATE 5/26/98

Composite Mom Cap at L=60.5' including Rebar

Composite Section Check @ 60.5' From support

$D_P = 8" + 1.875 + 25.39 = 35.27"$

$\frac{D_P}{D'} = \frac{35.27}{11.65} = 3.03 < 5$ ∴ Section is Compact

overall Structure Depth = 124.75'

$$M_P = \Big\{ (A_{BF} * f_y)\, d_{NA\,BF} + [(D_{SD} - D_P - t_{BF}) * t_{web} * f_y]\, d_{NA\,B.web} + [(D_P - \overbrace{t_s - t_{tf}}^{11"}) * t_{web} * f_y]\, d_{NA\,T.web} + (A_{TF} * f_y)\, d_{NA\,TF} + (.85 f'_c\, b\, a)\, d_{NA\,SLAB} \Big\} / 12^{IN}/FT$$

with Rebar

$$= \Big\{ \overbrace{[(26" * 1.75" * 50^{KSI})]}^{16,798.03} (124.75" - \tfrac{1.75"}{2} - \overbrace{35.27"}^{D_P}) \quad \text{Bottom Flange}$$

4.2.5/9

$$+ [\overbrace{(124.75" - 35.27" - 1.75")}^{87.73"} * \tfrac{11}{16}" * 50^{KSI})]\, (87.73./2) \quad \text{Web below NA}$$

$11,023.7$

$$+ [\overbrace{(35.27" - 11")}^{24.27"} * \tfrac{11}{16}" * 50^{KSI}]\, (24.27/2) \quad \text{Web above NA}$$

843.6

$$+ [(22" * 1\tfrac{1}{8}") * 50^{KSI}]\, (35.27. - 11" + \tfrac{1\frac{1}{8}"}{2}) \quad \text{Top Flange}$$

$2,561$

$$+ [(.85(4.5^{KSI}) * 96" * 8")(35.27" - \tfrac{8"}{2})] \quad \text{Concrete}$$

$7,654.9$ 4.2.5/8

$$+ [(4.70^{IN^2} * 60^{KSI})]\, (35.27" - \tfrac{8"}{2}) \Big\} / 12^{IN}/FT \quad \text{Rebar}$$

734.8

$M_P = 39,616.^{K-FT}$

$$\therefore M_u = \left(\frac{5 * 39,616^{K-FT} - 0.85 * 27,194^{K-FT}}{4} \right) + \left(\frac{0.85 * 27,194^{K-FT} - 39,616^{K-FT}}{4} \right) \left(\frac{35.27"}{11.65"} \right)$$

43,791

with Rebar

$M_u = 31,252.^{K-FT} > 30,091.^{K-FT}$ OK ✓

4.2.3/17

URS Greiner 4.2.5/18

JOB SR414 (Maitland Blvd) SHEET 7 OF 7 PROJ. NO
DESCRIPTION COMPUTED BY MSE DATE 5/21/98
CHECKED BY S.H DATE 5/26/98

Composite Moment Capacity at L=121 (Midspan) without rebar

Since $(D_p = 40.27'')$ $> (D' = 11.74'')$ but $D' < D_p \leq 5D'$

M_u = Eq. (10-129c)

Where

$$M_y = 1.3(M_{DL} + M_{SDL}) + 2.17\left(50^{KSI} - \frac{1.3 M_{DL}}{S_{\infty}} - \frac{1.3 M_{SDL}}{S_{3N}}\right)\frac{S_N}{2.17}$$

6,996.0

4.2.3/10

$$= 1.3\,(16{,}035.7 + 2{,}897.8)^{K\text{-}FT} + 2.17\left[50^{KSI} - \frac{1.3 * 16{,}035.7^{K\text{-}FT} * 52.3^{IN} * 12^{IN}}{469{,}187^{IN^4}} - \frac{1.3 * 2{,}897.8^{K\text{-}FT} * 62.2^{IN} * 12^{IN}}{605{,}018^{IN^4}}\right]\left(\frac{786{,}367^{IN^4}}{75.4^{IN}}\right)\left(\frac{1}{2.17}\right)\left(\frac{FT}{12^{IN}}\right)$$

$$M_y = 39{,}795^{K\text{-}FT}$$

M_p = (See Eq. on sheet 1 of 4)

$$= \Big\{ \underbrace{\left[(26'' * 2.75'' * 50^{KSI})\right]\left(125.75'' - \frac{2.75''}{2} - 40.27''\right)}_{25{,}056} \quad \text{Bottom Flr.}$$

Strut Depth D_p

$$+ \underbrace{\left[\left(\overbrace{125.75'' - 40.27 - 2.75''}^{82.73''}\right) * \tfrac{11}{16}'' * 50^{KSI}\right]\left(82.73''/2\right)}_{9{,}803} \quad \text{Web Below N.A.}$$

$$+ \underbrace{\left[\left(\overbrace{40.27'' - 11''}^{29.27''}\right) * \tfrac{11}{16}'' * 50^{KSI}\right]\left(29.27''/2\right)}_{1{,}227} \quad \text{Web Above N.A.}$$

$$+ \underbrace{\left[22'' * 2.25'' * 50^{KSI}\right]\left(40.27'' - 11'' + \frac{2.25''}{2}\right)}_{6{,}269} \quad \text{Top Flang}$$

$$+ \underbrace{\left[.85(4.5^{KSI}) * 96'' * 8''\right]\left(40.27'' - \frac{8''}{2}\right)}_{8{,}879} \Big\} / 12^{IN}/FT \quad \text{Conc.}$$

Could Increase if Rebar Included like at L=605', $M_p = 51{,}234^{K\text{-}FT}$ ~ 34060 M_u Value

$$M_u = \left(\frac{5 * 51{,}234^{K\text{-}FT} - 0.85 * 39{,}795^{K\text{-}FT}}{4}\right) + \left(\frac{0.85 * 39{,}795 - 51{,}234^{K\text{-}FT}}{4}\right)\left(\frac{40.27^{IN}}{11.74^{IN}}\right)$$

$$M_u = 40{,}658^{K\text{-}FT} > 40{,}121^{K\text{-}FT} \quad \text{OK}$$

4.2.3/17

URS Greiner

JOB SR 414 (Maitland Blvd) over SR434 SHEET __ OF __ PROJ. NO V100334.00
DESCRIPTION _____ COMPUTED BY MSE DATE 5/27/98
CHECKED BY _____ DATE _____

Composite Moment Capacity at LF121 (Midspan) / with Rebar

Composite Section - Section @ Midspan

Check AASHTO Sec. 10.50.1.1

TF = 22 x 2.25
Web = 112 x .6875
BF = 26 x 2.75

a)

1. $C = 0.85 f'_c b t_s + (AF_y)_c$

$C = (.85 \times 4.5 \times 96 \times 8) + (4.70 \times 60) = 3,219.6$ ← Controls

2. $C = (AF_y)_{bf} + (AF_y)_{tf} + (AF_y)_w$

$C = (71.5 \times 50) + (49.5 \times 50) + (77 \times 50) = 9,900^k$

b) $a = \frac{C - (AF_y)_c}{.85 f'_c b} = \frac{3,219.6 - (4.70 \times 60)}{.85 \times 4.5 \times 96} = 8.0''$

c) $C' = \frac{\Sigma(AF_y) - C}{2}$

$C' = \frac{9,900 - 3,219.6}{2} = 3,340.2^k$

$(AF_y)_{tf} = 22 \times 2.25 \times 50 = 2475.0^k$

$C' = 3,340.2^k > (AF_y)_{tf} = 2,475^k$

$\bar{Y} = t_{tf} + \frac{C' - (AF_y)_{tf}}{(AF_y)_w} D$

$\bar{Y} = 2.25 + \frac{3,340.2 - (2475.0)}{3850} \times 112 = 27.42''$

$\frac{2 D_{cp}}{t_w} \leq \frac{19,230}{\sqrt{f_y}}$

$\frac{2 \times (27.42 - 2.25)}{.6875} = 73.2 < 86.0$

$\frac{D_p}{D'} \leq 5$ (AASHTO Eq. 10-129a)

URS Greiner

JOB SR414 (Maitland Blvd) over SR434 SHEET __ OF __ PROJ. NO V100334.00
DESCRIPTION COMPUTED BY MSE DATE 5/27/98
CHECKED BY ____ DATE ____

Composite Moment Capacity at L=121 (Midspan) with Rebar

Composite Section Check @ Midspan

$$D' = \frac{\beta(d+t_s+t_h)}{7.5} = \frac{0.7(117+8+0.75)}{7.5} = 11.74''$$

$$D_p = 8'' + 0.75'' + 27.42'' = 36.17''$$

$$\frac{D_p}{D'} = \frac{36.17}{11.74} = 3.08 < 5 \quad \therefore \text{ Section is Compact.}$$

URS Greiner

JOB SR414 (Maitland Blvd) SHEET 7 OF 7 PROJ. NO
DESCRIPTION COMPUTED BY MSE DATE 5/27/98
CHECKED BY DATE

Composite Moment Capacity at L=121 (Midspan) with rebar

Since $(D_p = 36.17'') > (D' = 11.74'')$ but $D' < D_p \le 5D'$

M_u = Eq. (10-129c)

where

$$M_y = 1.3(M_{DL} + M_{SDL}) + 2.17\left(50^{KSI} - \frac{1.3 M_{DL}}{S_{DL}} - \frac{1.3 M_{SDL}}{S_{SN}}\right)\frac{S_N}{2.17}$$

$$= 1.3\,(\overset{4.2.3/10}{16{,}035.7} + \overset{6{,}996.0}{2{,}897.8})^{K\text{-}FT} + 2.17\left[50^{KSI} - \frac{1.3 * 16{,}035.7^{K\text{-}FT} * 52.3^{IN} * 12^{IN}/FT}{469{,}187^{IN^4}} - \frac{1.3 * 2{,}897.8^{K\text{-}FT} * 62.2^{IN} * 12^{IN}/FT}{605{,}018^{IN^4}}\right]\left(\frac{786{,}367^{IN^4}}{75.4^{IN}}\right)\left(\frac{1}{2.17}\right)\left(\frac{FT}{12^{IN}}\right)$$

$M_y = 39{,}795^{K\text{-}FT}$

M_p = (See Eq. on sheet 1 of 4)

$$= \Big\{ [(26'' * 2.75'' * 50^{KSI})](125.75'' - \tfrac{2.75''}{2} - 36.17'') \quad \text{Bottom Flan}$$
$$+ [(125.75'' - 36.17'' - 2.75'') * \tfrac{11}{16}'' * 50^{KSI}](86.83''/2) \quad \text{Web Below N}$$
$$+ [(36.17'' - 11'') * \tfrac{11}{16}'' * 50^{KSI}](25.17''/2) \quad \text{Web Above N.A}$$
$$+ [22'' * 2.25'' * 50^{KSI}](36.17'' - 11'' + \tfrac{2.25''}{2}) \quad \text{Top Flan}$$
$$+ [.85(4.5^{KSI}) * 96'' * 8''](36.17'' - \tfrac{8''}{2}) \quad \text{Conc}$$
$$+ [(4.70^{IN^2} * 60^{KSI})](36.17'' - \tfrac{8''}{2}) \Big\} / 12^{IN}/FT \quad \text{Rebar}$$

Strut Depth: 25,055; 9,303; 1,227; 6,269; 8,879

M_p = 52,038 $^{K\text{-}FT}$ ← B4060 M_u Value

$$M_u = \left(\frac{5 * 52{,}038^{K\text{-}FT} - 0.85 * 39{,}795^{K\text{-}FT}}{4}\right) + \left(\frac{0.85 * 39{,}795 - 52{,}038^{K\text{-}FT}}{4}\right)\left(\frac{36.17^{IN}}{11.74^{IN}}\right)$$

$M_u = 42{,}563^{K\text{-}FT} > 40{,}121^{K\text{-}FT}$ (4.2.3/17) OK

Appendix D
Load Rating Calculations

Appendix D: Load Rating Calculations

1. **SR 414 Eastbound Over Lake Bosse (Existing Bridge No. 770074)**
2. **SR 414 Westbound Over Lake Bosse (Existing Bridge No. 770074)**
3. **SR 414 Over Little Wekiva River (Existing Bridge No. 770075)**
4. **SR 414 Over SR 434 (Existing Bridge No. 770083)**

SR 414 Over Lake Bosse

CFX Project No 414-227

Existing Bridge No. 770074

(Future Eastbound Bridge)

Bridge Load Rating Calculations

August 2021

By

Base Consultants, Inc.

1214 East Concord Street

Orlando, FL 32803

Certificate of Authorization No. 27343

Ram Kozhikote, P.E., No. 44022

Table of Contents

1. Summary -Load Rating Summary Form
2. Narrative
3. Plans
4. Calculations
    a. LEAP Concrete Bridge Input – Span 1 and 2
    b. LEAP Concrete Bridge Output – Span 1 and 2
    c. LEAP Steel Bridge Input – Span 3
    d. LEAP Steel Bridge Output – Span 3
    e. LEAP Concrete Bridge Input – Span 4, 5 and 6
    f. LEAP Concrete Bridge Output – Span 4, 5 and 6

1. Summary - Load Rating Summary Form

Bridge No.	**770074**	**Analysis Method:**	**LRFR-LRFD**
Location	**SR 414 Over Lake Bosse (Future Eastbound Bridge)**		
Description	**Steel Plate Girder and Florida Bulb Tee - 6 Spans**		

FDOT Bridge Load Rating Summary Form (Page 1 of 1)

Rating Type	Rating Type	Gross Axle Weight (tons)	Moment/Shear/Service		Dead Load Factor	Live Load Factor	Live Load Distrib. Factor (axles)	Rating Factor	Span No. - Girder No., Interior/Exterior, %Span Length	RF·Weight (tons)
Level	**Vehicle**	**Weight**	**Member Type**	**Limit**	**DC**	**LL**	**LLDF**	**RF**	**Governing Location**	**RATING**
Inventory	HL93	36	Steel	Strength, Moment	1.25/0.90	1.75	NA	1.266	Span No. 3 - Girder No. 1, Exterior, 50%Span Length	45.6
Operating	HL93	36	Steel	Strength, Moment	1.25/0.90	1.35	NA	1.642	Span No. 3 - Girder No. 1, Exterior, 50%Span Length	59.1
Permit	FL120	60	Steel	Strength, Moment	1.25/0.90	1.35	NA	1.575	Span No. 3 - Girder No. 1, Exterior, 50%Span Length	94.5
Permit Max Span	FL120	60	Steel	Strength, Moment	1.25/0.90	1.35	NA	1.575	Span No. 3 - Girder No. 1, Exterior, 50%Span Length	94.5
Legal	SU2	17	Steel	NA	NA	NA				-1
	SU3	33	Steel	NA	NA	NA				-1
	SU4	35	Steel	NA	NA	NA				-1
	C3	28	Steel	NA	NA	NA				-1
	C4	36.7	Steel	NA	NA	NA				-1
	C5	40	Steel	NA	NA	NA				-1
	ST5	40	Steel	NA	NA	NA				-1
Emergency Vehicle (EV)	EV2	28.75	Steel	NA	NA	NA				-1
	EV3	43	Steel	NA	NA	NA				-1

Original Design Load	HS20 or HS20-S16-44		
Rating Type, *Analysis*	LRFR-LRFD		
Distribution Method	Refined analysis		
Impact Factor	33.0%	(axle loading)	
FL120 Gov. Span Length	210.0	(feet)	
Minimum Span Length	92.5	(feet)	
Recommended Posting	At/Above legal loads. Posting Not Required.		
Recommended SU Posting	99	(tons)	
Recommended C Posting	99	(tons)	
Recommended ST5 Posting	99	(tons)	
Owner	04 City or Municipal Highway Agency		
Location	Carries interstate traffic.		
EV Posting	No. EV posting is not recommended. The FAST Act does not apply		
Floor Beam Present?	No		
Segmental Bridge?	No		
Project No. & Reason	NA	Other	
Plans Status	Design or Construction		

Performed by:	Karan Vekariya	Date:	08/02/21
Checked by:	Ram Kozhikote, PE	Date:	08/02/21

This item has been digitally signed and sealed by

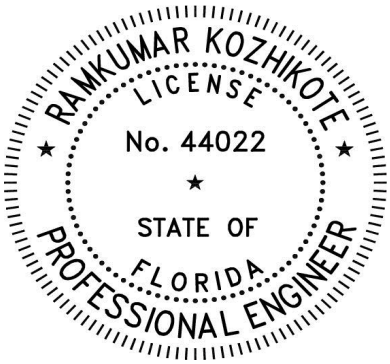

on the date adjacent to the seal. Printed copies of this document are not considered signed and sealed and the signature must be verified on any electronic copies.

Comments: Existing bridge is being modified by removing the raised median to allow for construction of a new viaduct to span overhead. This will separate the existing bridge into two bridge structures, one Eastbound and one Westbound. This report reviews the Eastbound structure.

This 01-01-2021 summary follows the FDOT Bridge Load Rating Manual (BLRM), and the FDOT BMS Coding Guide.
*Recommended SU Posting levels for Florida SU trucks adequately restricts AASHTO SU trucks; see BLRM Chapter 7.

fdot.gov/maintenance/LoadRating.shtm

2. Narrative

NARRATIVE

Bridge Arrangement

Bridge No. 770074 is an existing six span structure that carries SR414 over Lake Bosse. This bridge is 700'-0" long and 129'-0" wide, carrying both Eastbound and Westbound lanes with a raised median. Its superstructure consists of Florida Bulb Tee 72 beams, Steel Plate Girders and an 8-inch deck. This report is to determine the viability of separating the bridge into two structures, both 49'-10 1/8" wide, to allow for a proposed elevated Viaduct to span over the existing bridge. The supports of the proposed viaducts are to run parallel with the existing bridge structure where the current raised median and the two interior adjacent lanes are shown on existing plans. The interior lanes are not used under existing lane configuration and this portion is striped off. The proposed modification will eliminate the raised median and provide two bridges, each carrying one 11'-0" lane, one 12'-0" lane, a 6'-0" interior shoulder with a new barrier, an 8'-0" exterior shoulder, and a 5'-0" sidewalk protected by an existing barrier and a railing. The future Eastbound bridge structure will consist of the same superstructure beams and deck as the existing structure.

Methodology

The existing structure was originally designed in 1994. The proposed modifications shown in this report were designed with AASHTO LRFD (Load and Resistance Factor Design) criteria and subsequently rated with AASHTO LRFR (Load and Resistance Factor Rating).

Software

The beams have been Load Rated with LEAP Bridge Concrete/Steel Connect Version 21.

Beam Numbering

The beam numbering found in the FDOT Load Rating Summary Tables correspond with the Superstructure Plan/Section Sheet included in the Design Plans Section of this Report.

3. Plans

Existing Plans

GENERAL NOTES

A. SPECIFICATIONS

1. CONSTRUCTION:
   a) Florida Department Of Transportation Standard Specifications For Road And Bridge Construction, (1991 Edition) And Supplements Thereto.
2. DESIGN:
   a) AASHTO Standard Specifications For Highway Bridges, (1992 Edition), And Applicable Interims Through 1993.
   b) Florida Department Of Transportation Structures Design Guidelines, 1987, Through 1994 Revision.
   c) "INSITU Soil Improvement Techniques" AASHTO – AGC – ARTBA Task Force 27 Ground Modifications Techniques Janurary 1990.

B. DESIGN LOADINGS

1. DEAD LOADS:
   a) Unit Weight Of Reinforced Concrete: 150 PCF
   b) Future Wearing Surface: 15 PSF
   c) Traffic Railing: 418 PLF
   d) Pedestrian Railing: 200 PLF
   e) Stay In Place Forms: Design Includes An Allowance For 20 PSF Over The Projected Plan Area For The Unit Weight Of Metal Forms And Concrete Required To Fill The Form Flutes. Stay In Place Forms Shall Not Be Used For Cantilever Portions Of The Deck Slab.
2. LIVE LOADS:
   HS 20–44 With Impact (Prestressed Beams Designed For An Additional 5% Live Load). See Also Sheet B–3 For Crane Loads.
3. WIND LOADS:
   a) Basic Wind: In Accordance With AASHTO Specifications.
4. DESIGN TEMPERATURES:

SUPERSTRUCTURE:	MEAN	RISE FROM MEAN	FALL FROM MEAN	RANGE
–Concrete Beams	70°F	+25°F	–25°F	50°F
–Composite Steel Beams	70°F	+35°F	–35°F	70°F

   –Concrete Thermal Coefficient = 0.000005 Per Degree F
   (Based On Florida Limerock Aggregate)
   –Steel Thermal Coefficient = 0.0000065 Per Degree F
5. EARTHQUAKE:
   a) Seismic Performance Category B
      Acceleration Coefficient = 0.025
      Little Wekiva River – Per AASHTO 4.5 Of Division 1–A
      Lake Bosse – Category B
6. DISTRIBUTION VALUES:

	INTERIOR BEAMS	EXTERIOR BEAMS
a) Live Load (As Function Of Beam Spacing, S)	S/5.5	S/5.5
b) Traffic Barrier (PLF)	Per Structures Design Guidelines 10.12	

C. DESIGN METHOD

a) Strength Design Method (Load Factor Design) Except That The Design Of Prestressed Concrete Piles, Spread Footing And The Loads On Piles Have Been Computed For Service Loads. Prestressed Beams Are Service Load Design And Checked For Ultimate Capacity.

D. FOUNDATION

a) All Piles And Pile Driving Operations Shall Be In Accordance With F.D.O.T. Supplemental Specification Section 455.
b) Pile Loads:

Location	Pile Type	Adjusted Design Capacity	Design Service Load
Little Wekiva River	18"Sq. Prestressed Conc.	87 Tons	92 Tons
Lake Bosse	20"ø Steel Pipe (Conc. Filled)	115 Tons	130 Tons

c) Pile Design At Little Wekiva River Includes 5 Ton Per Pile Allowance Due To Negative Skin Friction.
   Pile Design At Lake Bosse Includes 15 Ton Per Pile Allowance Due To Negative Skin Friction.
d) Where MSE Walls Are To Be Used, End Bent Piles Shall Be Driven Prior To Placing The MSE Embankment.
e) The Portion Of The Piles Within The MSE Embankment (Above Existing Grade) Shall Be Wrapped With Two Independent Sheets Of 6 Mil Polyethylene In Accordance With F.D.O.T. Supplemental Specification 459.

E. DECK SEQUENCE POURING AND SCREEDING

a) Decks Shall Be Placed As Follows: After Pouring The First Unit Succeeding Pours Shall Begin At The End Away From And Proceed Toward The Previously Placed Unit.
b) The Riding Surface Of Bridge Deck Shall Be Screeded To Finish Grade With No Allowance For Permanent Camber.

F. END BENTS

a) All Exposed Edges Shall Be Chamfered 3/4" Unless Otherwise Noted.
b) Top Of Traffic Railing Shall Be Constructed Parallel To Grade.

G. MATERIALS

1. CONCRETE:
   Concrete Shall Be In Accordance With F.D.O.T. Supplemental Specification Section 346.
   a)

CLASS	Maximum Design Compressive Stress (psi)	Minimum 28–Day Compressive Strength (psi)	Design Unit Weight Incl. Reinforcing (pcf)	Modulus Of Elasticity (ksi)	Location Of Concrete In Structure
II (BRIDGE DECK)	fc = 1,800	f'c = 4,500	150	4,500	C.I.P. Conc. For Superstructure In Slightly Aggressive Environment Only
III	fc = 2000	f'c = 5000	150	3,700	MSE Walls
IV	fc = 2,200	f'c = 5,500	150	3,900	All C.I.P. Concrete In Extremely Aggressive Environment (Substructure)
IV	fc = 2,200	f'c = 5,500	150	3,900	Prestressed Conc. Beams @ Little Wekiva River
V	fc = 2,600	f'c = 6,500	150	4,200	Prestressed Conc. Beams @ Lake Bosse
V (SPECIAL)	fc = 2,400	f'c = 6,000	150	4,000	Prestressed Conc. Piles

   NOTE: Class V (Special) Concrete Shall Conform To All The Requirements Of Class V Concrete Except For The Minimum 28–Day Compressive Strength.
   b) Provide 3/4" Chamfers On All Exposed Edges Except As Otherwise Noted.
   c) Construction Joints Will Be Permitted Only At Location Indicated On Plans. Additional Construction Joints Or Alterations To Those Shown Shall Require Approval Of The Engineer.
2. REINFORCING STEEL:
   a) Prestressing Strands Used For Precast Beams Shall Be 270KSI, Low Relaxation, 1/2" Diameter Strands With With Nominal Steel Area Equal To 0.153 Sq. In. Prestressing Strands Used For Precast Piles Shall Be In Accordance With Index 600 (See Sheet A–4 & A–5).
   b) Reinforcement Shall Be ASTM A615, Grade 60, (f_s= 24,000 psi).
   c) All Dimensions Pertaining To The Location Of Reinforcing Are To The Centerline Of Bar Except Where The Clear Dimension Is Shown To Face Of Concrete.
   d) Reinforcement Detail Dimensions Are Out To Out Of Bars.
   e) E.F. Denotes "Each Face",
      N.F. Denotes "Near Face",
      F.F. Denotes "Far Face".
      F.F.B.W. Denotes "Front Face Of Back Wall".
   f) Concrete Cover For Reinforcement Shall Be:
      –Superstructure (CIP): 2"
      –Substructure (CIP): 4"
      –Precast, Pretensioned Piling: 3"
      –Concrete Cast Against Earth: 4 1/2"
   g) Concrete Covers Shown In The Plans Do Not Include Placement And Fabrication Tolerances Unless Shown As "Minimum Cover". See FDOT Standard Specifications For Allowable Tolerances.
3. STRUCTURAL STEEL:
   a) All Structural Steel Shall Be Made From ASTM A–709, Grade 50W (Weathering Steel).
   b) All Connection Bolts, Nuts And Washers Are To Be 7/8" Diameter, High Strength Bolts, ASTM A–325 (Type 3).
   c) All Anchor Bolts Shall Be In Accordance With AASHTO M 314 Grade 55. The Anchor Bolts, Nuts And Washers Shall Be Hot Dip Galvanized In Accordance With ASTM A–123 (For Plate) Or A–153 (For Hardware) Specifications.
   d) Contractor Is Responsable For Providing Proper Cross Bracing, Top Flange Bracing, etc. During All Phases Of Construction. Include The Method Of Bracing In The Shop Drawing Submittal.
4. PIPE PILES:
   a) See Foundation Layout Sheet For Details.

H. WELDING

a) Weld Details And The Welding Operation Shall Be In Accordance With The Current Edition Of The ANSI–AASHTO–AWS Bridge Welding Code. Welds Requiring Nondestructive Testing Shall Be Radiographically Inspected, Except Where The Geometry Of The Region Of The Weld Will Not Permit Satisfactory Information To Be Secured For Verification Of The Weld Quality. When Such Geometrical Conditions Exist, Other Inspection Procedures Or Combination Of Procedures Such As Ultrasonic Inspection, Dye Penetrant Inspection, And/Or Magnetic Particle Inspection May Be Required.

J. PREVENTION OF RUST STAINS FROM WEATHERING STEEL

a) Pier Cap No. 3 And 4 Shall Be Completely Wrapped With A Minimum Of Two Layers Of 6 Mil. Polyethylene Sheeting In Order To Provide A Watertight Seal. Joints In Sheeting Must Be Watertight. The Sheeting Shall Remain In Place, Without Tears Or Other Damage, Until All Construction Is Complete And Accepted. Only Then Shall The Contractor Remove The Sheeting.

K. CONSTRUCTION SEQUENCE

a) Phase Construction Is Required At Lake Bosse Bridge Only. See Construction Sequence Sheet For Details.

L. REMOVAL OF EXISTING BRIDGE

a) See Oranole Road Bridge Existing Bridge Plans.

M. ENVIRONMENT

1. Location – Inland
2. Description
   a) Superstructures: Slightly Aggressive For All Bridges.
   b) Substructure: Extremely Aggressive For All Bridges

N. JACKING LOAD NOTES

a) Jacking Loads Include Dead Load And Live Load Plus Impact. Jacking Equipment Is Not A Part Of This Contract And Does Not Need To Be Provided By The Bridge Contractor.
b) Jacks Shall Be Equipped With Locking Rings Which Will Prevent Movement In The Event Hydraulic Pressure Is Lost. Jacks Shall Be Locked Off Prior To Removal Of Any Bearing Assemblies.
c) Jacking Shall Continue Until Pads Can Be Freed, But the Amount Of Lift Shall Not Exceed 1/4 Inches.
d) Properly Sized Shim Plates Shall Be Provided To Limit The Ultimate Load Bearing Stressed On Concrete In Accordance With Article 8.16.7 Of AASHTO Standard Specifications.

O. DATUM

a) All Elevations Refer To NGVD 1929 Datum.

P. UTILITIES

a) Existing Utilities Shown At Approximate Locations. Exact Locations Shall Be Determined By The Contractor Prior To The Start Of Construction.
b) Contractor Shall Reference Utility Adjustment Plans In Roadway Set For Utility Relocation. Utility Relocations In Bridge Vicinity Not Shown In Bridge Plans.
c) Proposed Storm Sewer Utilities On Bridge:

Location:	Utility:
Little Wekiva River – Under Right Overhang	36"øD.I.P.
Lake Bosse – Under Left Overhang	30"øD.I.P.

   See Miscellaneous Detail Sheets.

Q. BRIDGE FLOOR GROOVING

All Roadway Riding Surfaces Of The Bridge Deck Slabs Shall Be Grooved In Accordance With The Requirements Of Class 4 Floor Finish In FDOT General Specification (Section 400–15.2.5)

R. STAY–IN–PLACE FORMS

All Embedded Items And Accessories Required For Stay–In–Place Forms Shall Be Included In The Shop Drawing Submittal.

S. SURFACE FINISH

The Top And Both Faces Of Traffic Railing (Barrier) And End Post, The Top And Both Faces Of The Sidewalk Parapet, And The Exterior Vertical Face Of The Bridge Deck Shall Recieve A "Class V Applied Finish Coating" In Accordance With The Specifications. See The "Surface Finish Details" On This Sheet.

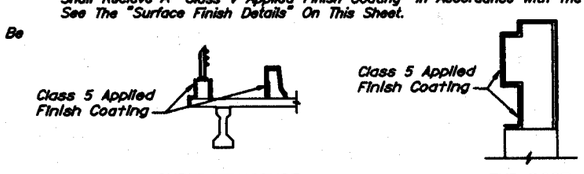

SUPERSTRUCTURE END POST

SURFACE FINISH DETAILS

BID ITEMS NOTES

1) Payment For Incidental Items Not Specifically Covered In The Individual Bid Items Shall Be Included In The Contract Prices For The Bid Items.
2) The Following Numbers Of Standard And Non–Standard Composite Neoprene Bearing Pads (Pay Item No. 400–147) Are Required:
   Little Wekiva River – 22 Type IV Composite Pads For A Total Volume Of 3.7 C.F.
   Lake Bosse – 110 Type V Composite Pads For A Total Volume Of 30.6 C.F.
   22 Non–Standard Composite Pads For A Total Volume Of 13.8 C.F.
   Neoporene Bearing Pads Shall Be Furnished And Installed By The Contractor.
3) Bid Item No. 400–7 Bridge Floor Grooving Shall Not Include Approach Slab Grooving. (See Roadway Plans) The Area Of Bridge Floor Grooving Shall Be Determined By Measurement Of Area Bounded By The Gutter Lines And The Beginning And End Of The Bridge Deck Slab.
4) The Total Plan Area Of Approach Slabs Required:
   Little Wekiva River – ____
   Lake Bosse – ____
   See Miscellaneous Bridge Details Sheet For Details. Additional Details Of Approach Slabs And Payment Are Included In The Roadway Plans.
5) The Removal Of The Existing Oranole Road Bridge Over The Little Wekiva River Shall Be Paid For Under Pay Item 110–3 Removal Of Existing Structures.

REVISIONS

Date	By	Description	Date	By	Description

	Names	Dates
Drawn by	JLA	9/94
Checked by	MKA	9/94
Designed by	MKA	9/94
Checked by	PM	9/94
Approved by	Peeter Mannik, P.E.	

ENGINEER OF RECORD: DYER, RIDDLE, MILLS AND PRECOURT, INC. 1505 EAST COLONIAL DRIVE ORLANDO, FLORIDA 32803

LOGO: DYER, RIDDLE, MILLS AND PRECOURT, INC. ENGINEERS - SURVEYORS 1505 EAST COLONIAL DRIVE ORLANDO, FLORIDA 32803

SEAL:

FLORIDA DEPARTMENT OF TRANSPORTATION
STRUCTURES DESIGN OFFICE

ROAD NO.	COUNTY	PROJECT NO.
SR414	SEMINOLE	77002–3503

SHEET TITLE: GENERAL NOTES

Drawing No.

PROJECT NAME: MAITLAND BOULEVARD

Index No.

FED. ROAD DIV. NO.	STATE	PROJECT NO.	FISCAL YEAR	SHEET NO.
3	FLA.		98	B-1

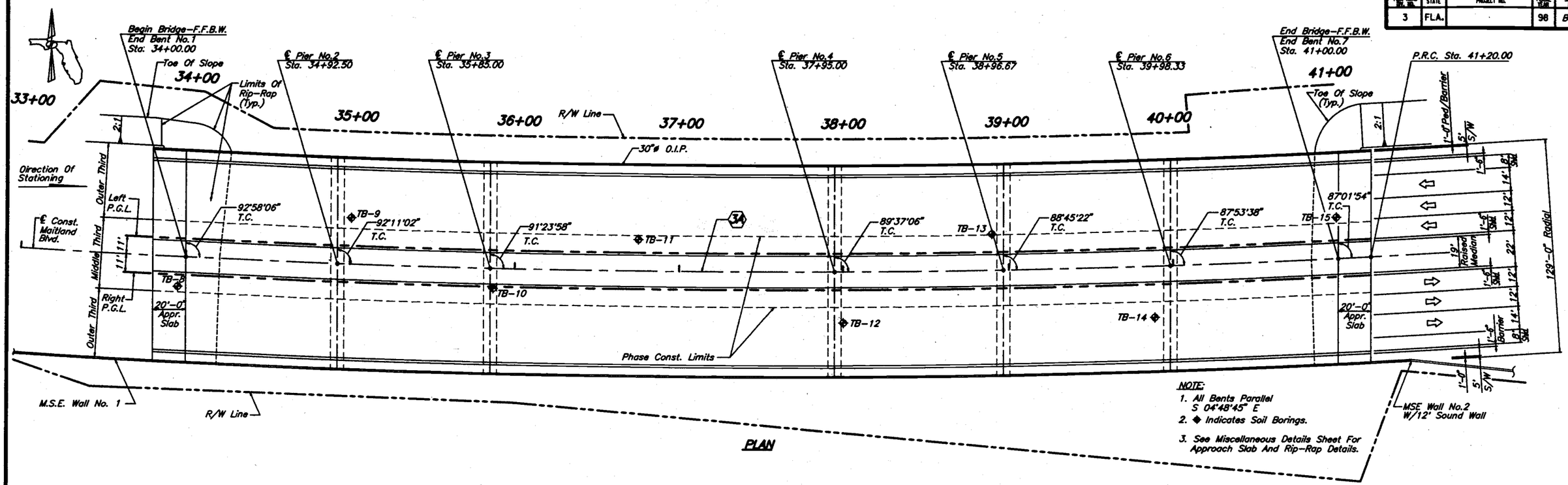

PLAN

NOTE:
1. All Bents Parallel S 04°48'45" E
2. ◆ Indicates Soil Borings.
3. See Miscellaneous Details Sheet For Approach Slab And Rip-Rap Details.

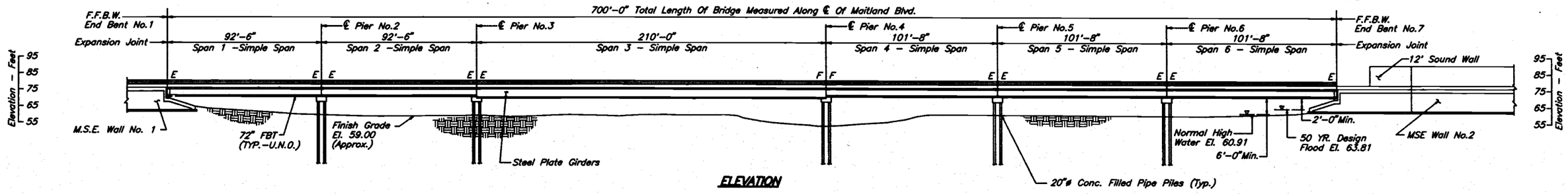

ELEVATION

CURVE DATA (3A)

Δ = 07°43'27" Lt.
D = 00°50'53"
T = 456.077'
L = 910.773'
R = 6755.800'
e = Normal/Crown
P.C. Sta. = 32+08.39 (Back)
32+09.23 (Ahead)
P.I. Sta. = 36+65.30
P.R.C. Sta. = 41+20.00

TRAFFIC DATA MAITLAND BLVD.

Est. 1998 2-Way ADT 34,818 EST
Est. 2008 2-Way ADT 37,952 EST
K = 9.0%
D = 55%
T = 5% (24 HR)
Design Speed = 45 MPH

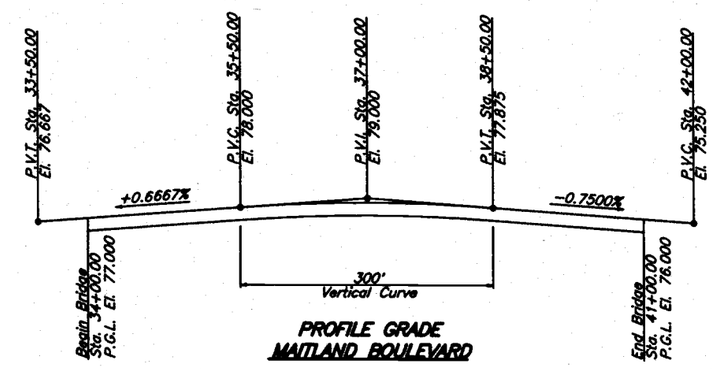

PROFILE GRADE MAITLAND BOULEVARD

REVISIONS

Date	By	Description	Date	By	Description

	Names	Dates
Drawn by	JLA	7/94
Checked by	MKA	7/94
Designed by	MKA	7/94
Checked by	PM	7/94
Approved by	Peeter Mannik, P.E.	

ENGINEER OF RECORD:
DYER, RIDDLE, MILLS AND PRECOURT, INC.
1505 EAST COLONIAL DRIVE
ORLANDO, FLORIDA 32803

LOGO:
DYER, RIDDLE, MILLS AND PRECOURT, INC.
ENGINEERS - SURVEYORS
1505 EAST COLONIAL DRIVE
ORLANDO, FLORIDA 32803

SEAL:

FLORIDA DEPARTMENT OF TRANSPORTATION
STRUCTURES DESIGN OFFICE

ROAD NO.	COUNTY	PROJECT NO.
SR414	SEMINOLE	77002-3503

SHEET TITLE: GENERAL PLAN AND ELEVATION

PROJECT NAME: MAITLAND BOULEVARD OVER LAKE BOSSE BRIDGE NO. 77002-3503

Drawing No.

Index No.

FED. ROAD DIST. NO.	STATE	PROJECT NO.	TOTAL SHEETS	SHEET NO.
3	FLA.		98	B-36

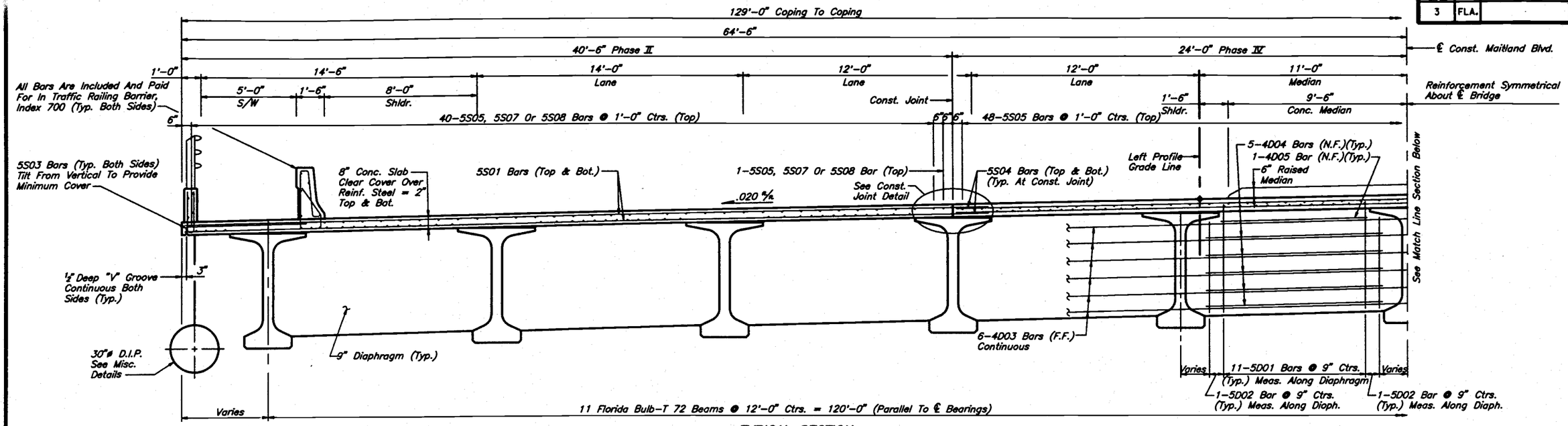

TYPICAL SECTION

NOTES:
1. All Dimensions Are Measured Radially Unless Noted Otherwise.
2. See Superstructure Details Sheet For Superstructure Notes And Details.

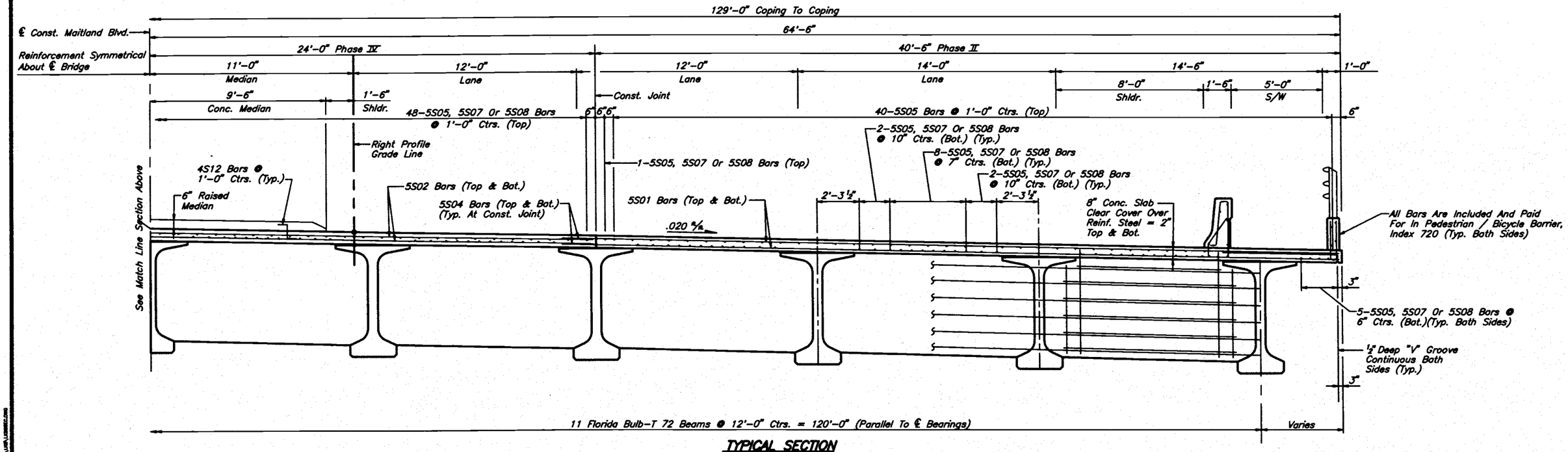

TYPICAL SECTION

SPANS 1, 2, 4, 5 AND 6

REVISIONS					
Date	By	Description	Date	By	Description

	Names	Dates
Drawn by	JJS	9/94
Checked by	MKA	9/94
Designed by	MKA	9/94
Checked by	PM	9/94
Approved by	Peeter Mannik, P.E.	

ENGINEER OF RECORD:
DYER, RIDDLE, MILLS AND PRECOURT, INC.
1505 EAST COLONIAL DRIVE
ORLANDO, FLORIDA 32803

LOGO: DYER, RIDDLE, MILLS AND PRECOURT, INC.

SEAL:

FLORIDA DEPARTMENT O

ROAD NO.	COUNTY	PROJECT NO.
SR414	SEMINOLE	77002-3503

SHEET TITLE: SUPERSTRUCTURE SECTION

PROJECT NAME: MAITLAND BOULEVARD OVER LAKE BOSSE

Drawing No.

Index No.

FED. ROAD DIV. NO.	STATE	PROJECT NO.	FISCAL YEAR	SHEET NO.
3	FLA.		98	B-29

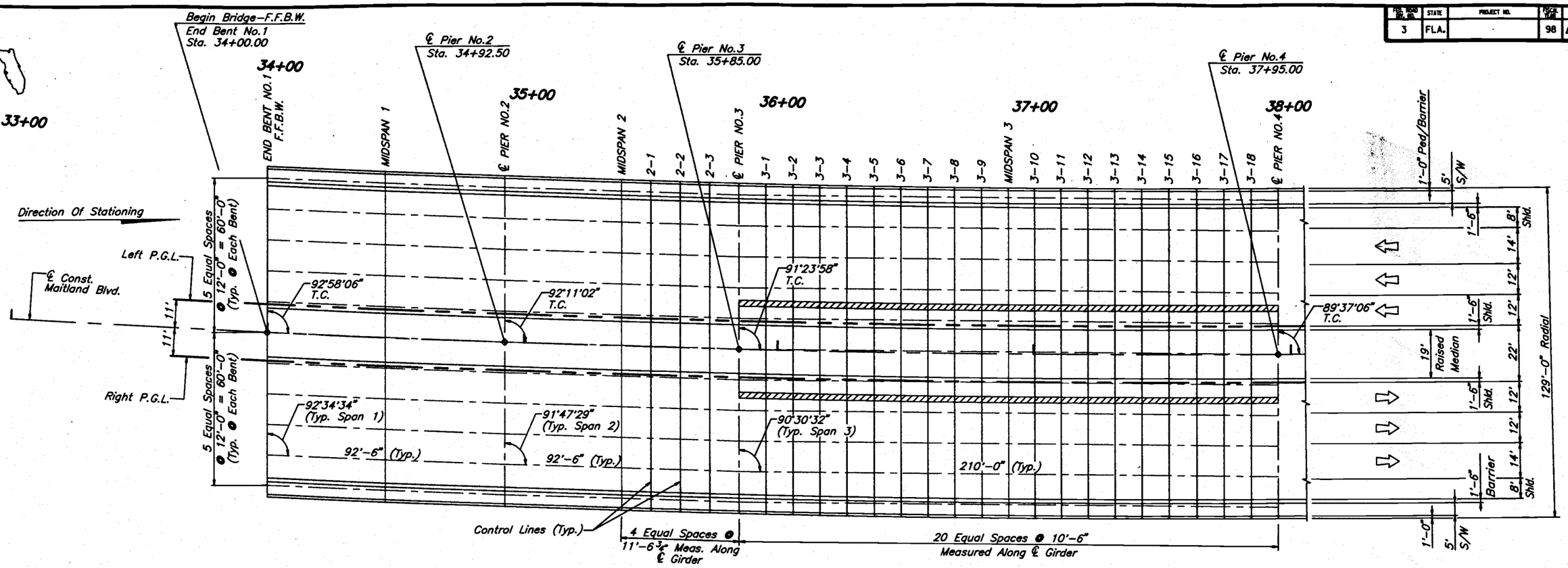

FRAMING PLAN & ROADWAY SURFACE ELEVATION GRID

NOTES:
1. ▽▽▽▽ Indicates 2'-4" Pour Cap.
2. Control Lines Are Parallel With Bents (S04°48'95"E).
3. For Deck Elevations See Finish Grade Elevations Sheet 3 of 3.

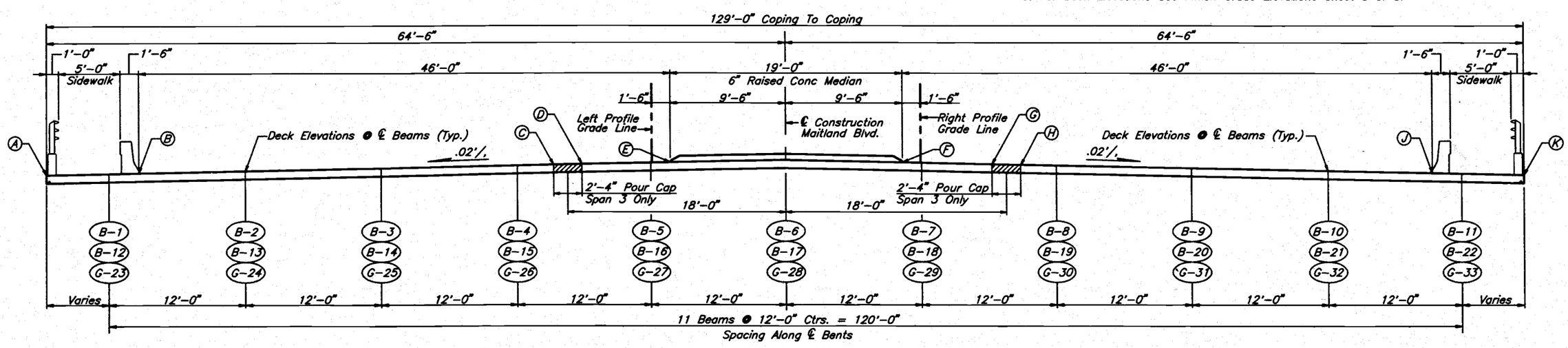

TYPICAL SECTION
Looking Up Station

REVISIONS

Date	By	Description	Date	By	Description

	Names	Dates
Drawn by	JLA	6/95
Checked by	MKA	6/95
Designed by	MKA	6/95
Checked by	PM	6/95
Approved by	Peeter Mannik, P.E.	

ENGINEER OF RECORD:
DYER, RIDDLE, MILLS AND PRECOURT, INC.
1505 EAST COLONIAL DRIVE
ORLANDO, FLORIDA 32803

LOGO:
DYER, RIDDLE, MILLS AND PRECOURT, INC.
ENGINEERS - SURVEYORS
1505 EAST COLONIAL DRIVE
ORLANDO, FLORIDA 32803

SEAL:

FLORIDA DEPARTMENT OF TRANSPORTATION
STRUCTURES DESIGN OFFICE

ROAD NO.	COUNTY	PROJECT NO.
SR414	SEMINOLE	77002-3503

SHEET TITLE: FINISH GRADE ELEVATIONS

PROJECT NAME: MAITLAND BOULEVARD OVER LAKE BOSSE

Drawing No. 1 of 3

Index No.

JOB 97/06/98 3:00PM C:\JOB\JLAPRECT.DGN

FED. ROAD DIST. NO.	STATE	PROJECT NO.	TOTAL SHEETS	SHEET NO.
3	FLA.		98	B-30

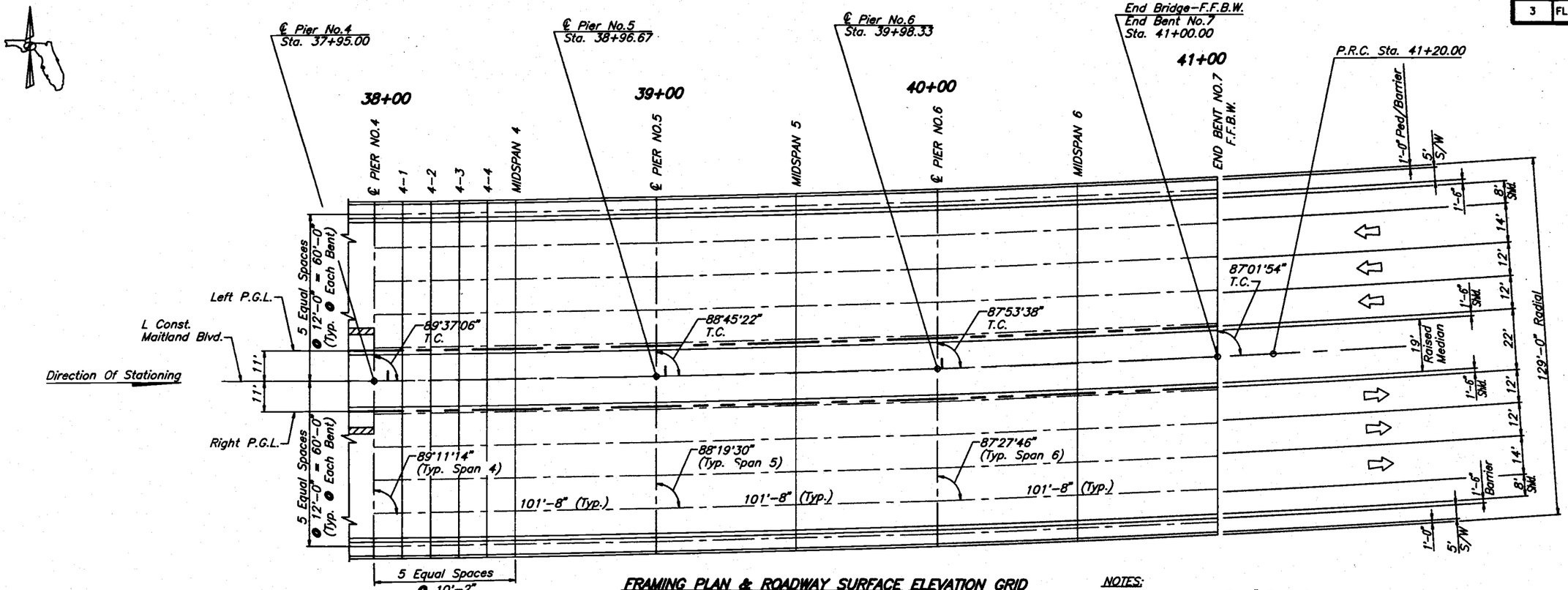

FRAMING PLAN & ROADWAY SURFACE ELEVATION GRID

NOTES:
1. ▨ Indicates 2'-4" Pour Cap.
2. Control Lines Are Parallel With Bents (S04°48'95"E).
3. For Deck Elevations See Finish Grade Elevations Sheet 3 of 3.

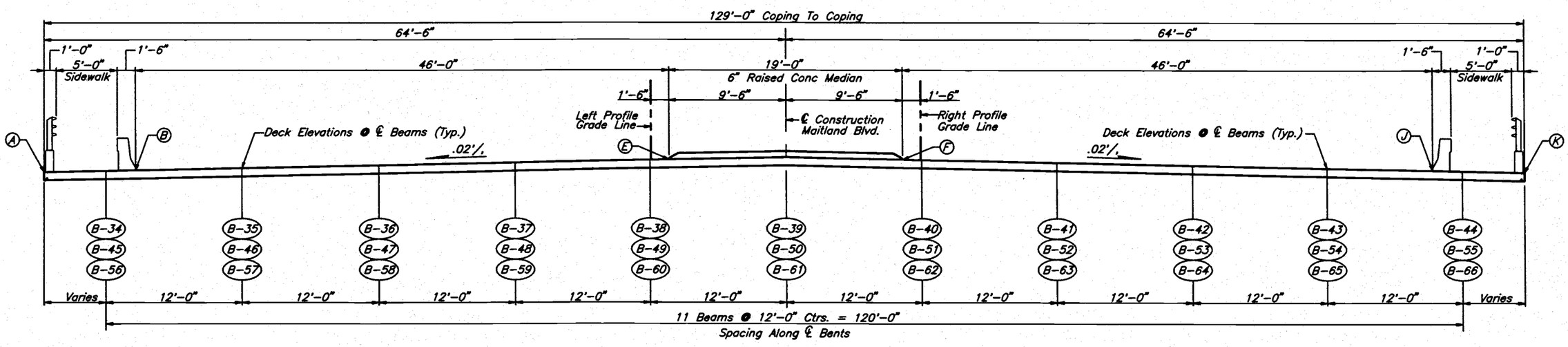

TYPICAL SECTION
Looking Up Station

REVISIONS					
Date	By	Description	Date	By	Description

	Names	Dates
Drawn by	JLA	6/95
Checked by	MKA	6/95
Designed by	MKA	6/95
Checked by	PM	6/95
Approved by	Peeter Mannik, P.E.	

ENGINEER OF RECORD:
DYER, RIDDLE, MILLS AND PRECOURT, INC.
1505 EAST COLONIAL DRIVE
ORLANDO, FLORIDA 32803

LOGO:
DYER, RIDDLE, MILLS AND PRECOURT, INC.
ENGINEERS - SURVEYORS
1505 EAST COLONIAL DRIVE
ORLANDO, FLORIDA 32803

SEAL:

FLORIDA DEPARTMENT OF TRANSPORTATION
STRUCTURES DESIGN OFFICE

ROAD NO.	COUNTY	PROJECT NO.
SR414	SEMINOLE	77002-3503

SHEET TITLE: FINISH GRADE ELEVATIONS

PROJECT NAME: MAITLAND BOULEVARD OVER LAKE BOSSE

Drawing No. 2 of 3

Index No.

FED. ROAD DIV. NO.	STATE	PROJECT NO.	FISCAL YEAR	SHEET NO.
3	FLA.		98	B-37

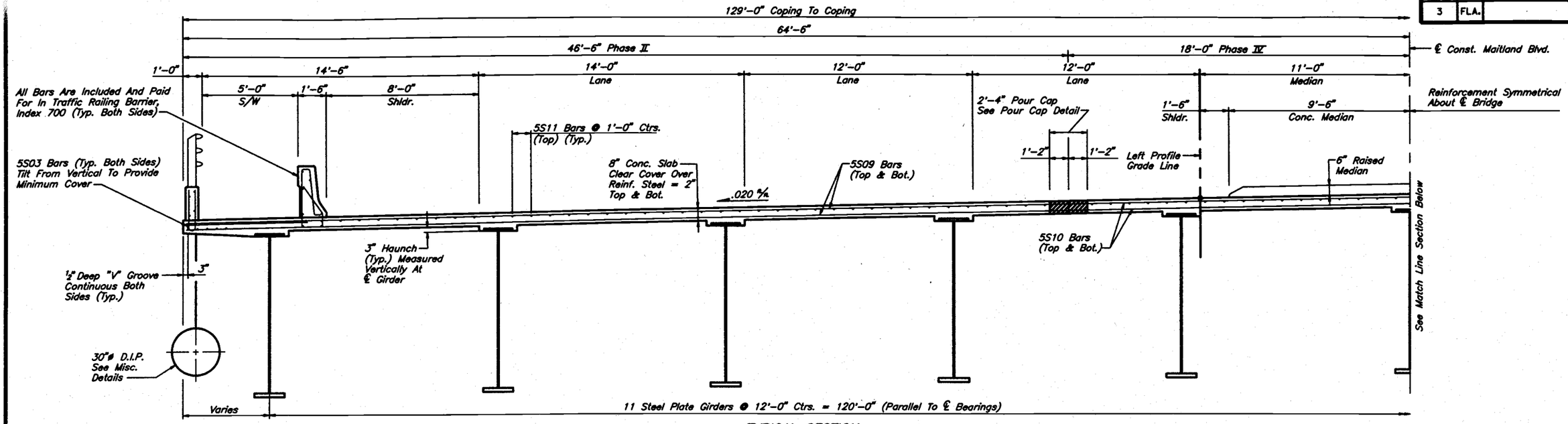

TYPICAL SECTION

NOTES:
1. All Dimensions Are Measured Radially Unless Noted Otherwise.
2. See Superstructure Details Sheet For Superstructure Notes And Details.
3. For Reinforcing Steel At Haunches, See Superstructure Details Sheet.

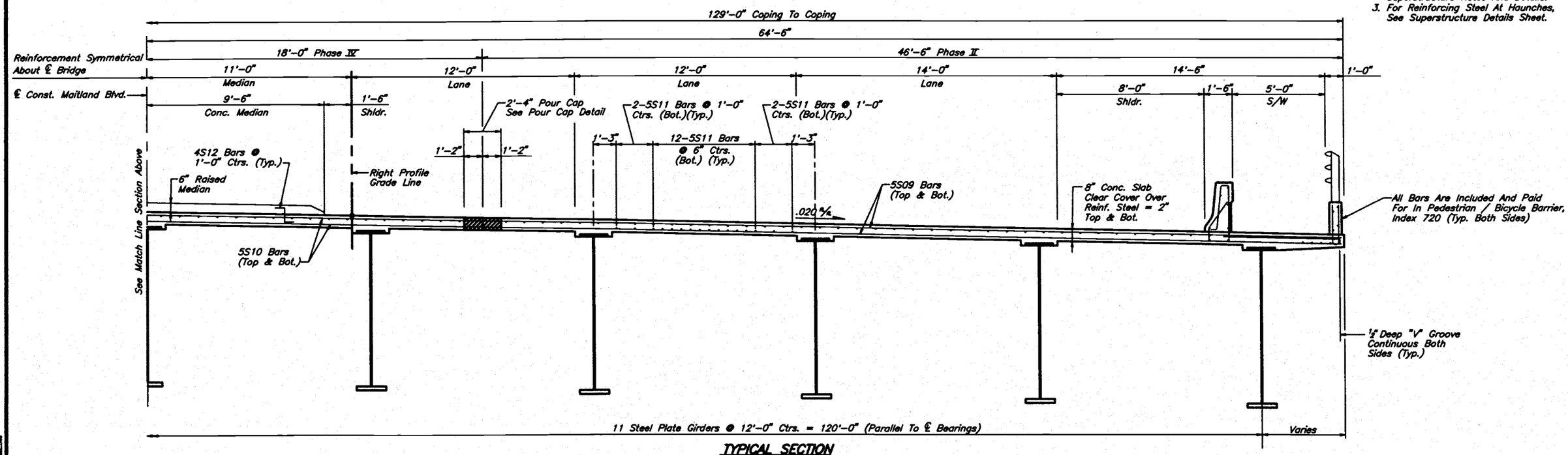

TYPICAL SECTION

SPAN NO. 3

REVISIONS					
Date	By	Description	Date	By	Description

	Names	Dates
Drawn by	JJS	9/94
Checked by	MKA	9/94
Designed by	MKA	9/94
Checked by	PM	9/94
Approved by	Peeter Mannik, P.E.	

ENGINEER OF RECORD:
DYER, RIDDLE, MILLS AND PRECOURT, INC.
1505 EAST COLONIAL DRIVE
ORLANDO, FLORIDA 32803

LOGO:
DYER, RIDDLE, MILLS AND PRECOURT, INC.
ENGINEERS - SURVEYORS
1505 EAST COLONIAL DRIVE
ORLANDO, FLORIDA 32803

SEAL:

FLORIDA DEPARTMENT OF TRANSPORTATION
STRUCTURES DESIGN OFFICE

ROAD NO.	COUNTY	PROJECT NO.
SR414	SEMINOLE	77002-3503

SHEET TITLE: SUPERSTRUCTURE SECTION

PROJECT NAME: MAITLAND BOULEVARD OVER LAKE BOSSE

Drawing No.

Index No.

JOB 07/21/98 11:18AM C:\JJS\JJSRSEC.DGN

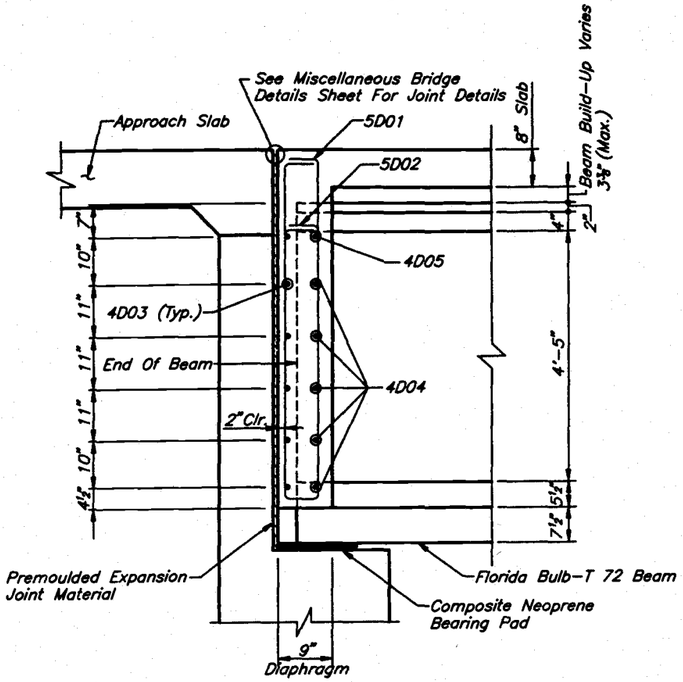

DIAPHRAGM SECTION AT END BENTS
(Concrete Beam Spans Only)

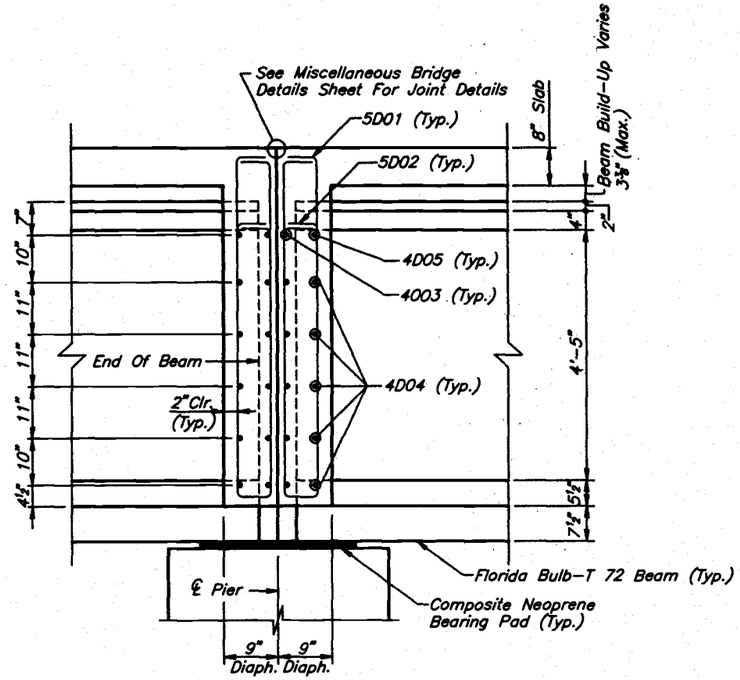

DIAPHRAGM SECTION AT PIERS
(Concrete Beam Spans Only)

NOTES

1. The Build-Up Dimensions Are Computed Assuming A Time To Release Of 24 Hours.
2. The Length Correction Dimension And The Build-Up Dimensions Assume A Period Of No More Than 120 Days Between The Casting Of The Beam And The Casting Of The Deck. These Values Are Also Calculated Assuming Transfer Of Prestress At The Indicated Release Concrete Strength (f'ci). Contractor Shall Submit Calculations Revising These Values To The Engineer For Approval Should The Contractor's Proposed Schedule Between Casting Of The Beam And Casting Of The Deck Adversely Affect These Time Dependent Values.
3. Dead Load Deflection During Pour Is The Anticipated Deflection Of Beam Due To Casting Of The Concrete Deck. Build-Up At Ends And Build-up At Midspan (See Detail This Sheet) Refer To The Build-Up At The Ends And Midspan Of The Beam Necessary To Achieve True Grade At The Top Of The Deck After Casting Of The Deck.
4. Slab Shall Be Screeded To Grade With No Allowance For Permanent Camber. For This Project Slabs Shall Be Screeded Longitudinally Between Bents Unless Otherwise Directed In Writing By The Engineer.
5. No Unit Shall Be Placed Adjacent To A Previously Placed Unit That Is Not A Minimum Of 72 Hours Old.
6. After Placement Of The First Unit, Succeeding Placements Shall Begin At The End Away From And Proceed Toward The Previously Placed Unit.
7. The Cost Of All Labor And Materials Required For Construction Of Deck Joint Shall Be Paid For In Bid Item No. 400-2-4 Class II Concrete (Superstructure).
8. All Or Part Of The Raised Median In Span 3 May Be Poured Prior To The Pour Caps In Order To Lower The Camber Of The Middle Section As Necessary.
9. The Pour Caps In Span 3 Must Be Complete Before Placement Of The Traffic Barriers And 30" D.I.P., And Before Completion Of The Raised Median (See Note 8).

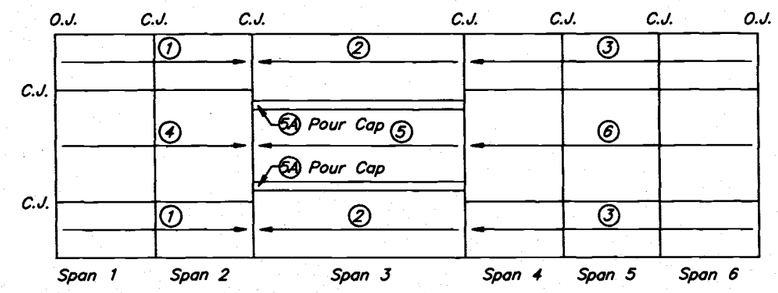

DECK POUR SEQUENCE
O.J. : Open Joint
C.J. : Construction Joint

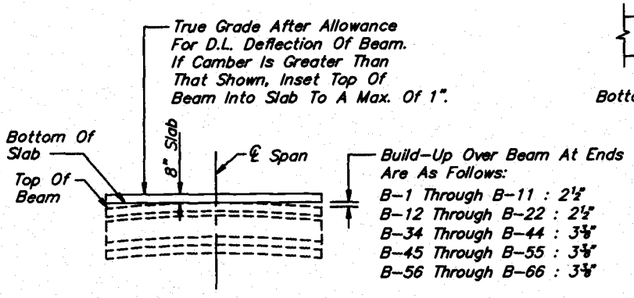

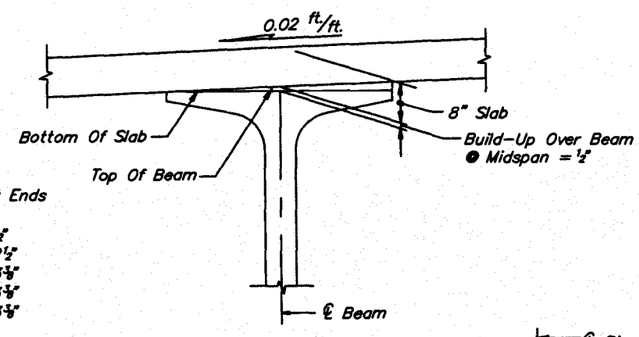

BUILD-UP OVER FLORIDA BULB-T BEAM

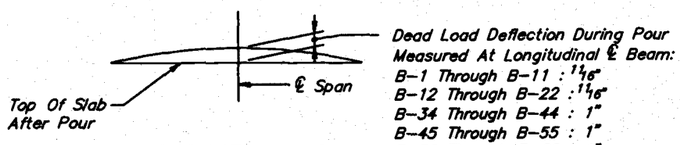

DEFLECTION DIAGRAM FOR FLORIDA BULB-T

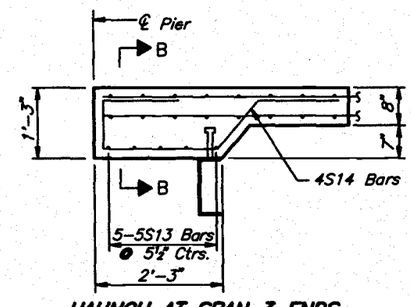

HAUNCH AT SPAN 3 ENDS

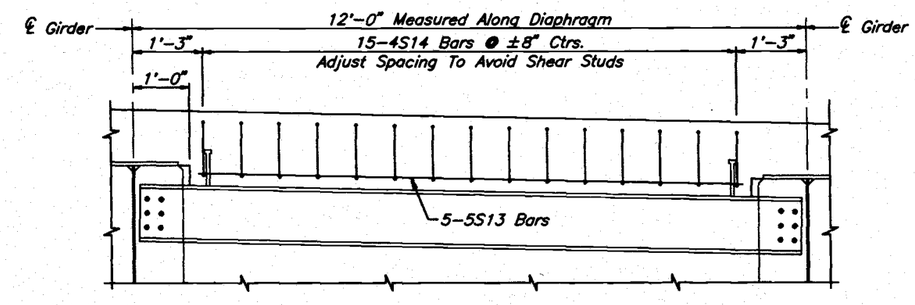

SECTION B-B

REVISIONS						
Date	By	Description	Date	By	Description	

	Names	Dates
Drawn by	JLA	7/94
Checked by	MKA	7/94
Designed by	MKA	7/94
Checked by	PM	7/94
Approved by	Peeter Mannik, P.E.	

ENGINEER OF RECORD: DYER, RIDDLE, MILLS AND PRECOURT, INC.
1505 EAST COLONIAL DRIVE
ORLANDO, FLORIDA 32803

LOGO: DYER, RIDDLE, MILLS AND PRECOURT, INC.
ENGINEERS - SURVEYORS
1505 EAST COLONIAL DRIVE
ORLANDO, FLORIDA 32803

SEAL:

FLORIDA DEPARTMENT OF TRANSPORTATION
STRUCTURES DESIGN OFFICE

ROAD NO.	COUNTY	PROJECT NO.
SR414	SEMINOLE	77002-3503

SHEET TITLE: SUPERSTRUCTURE DETAILS

PROJECT NAME: MAITLAND BOULEVARD OVER LAKE BOSSE

Drawing No.

Index No.

FED. ROAD DIV. NO.	STATE	PROJECT NO.	FISCAL YEAR	SHEET NO.
3	FLA.		98	B-39

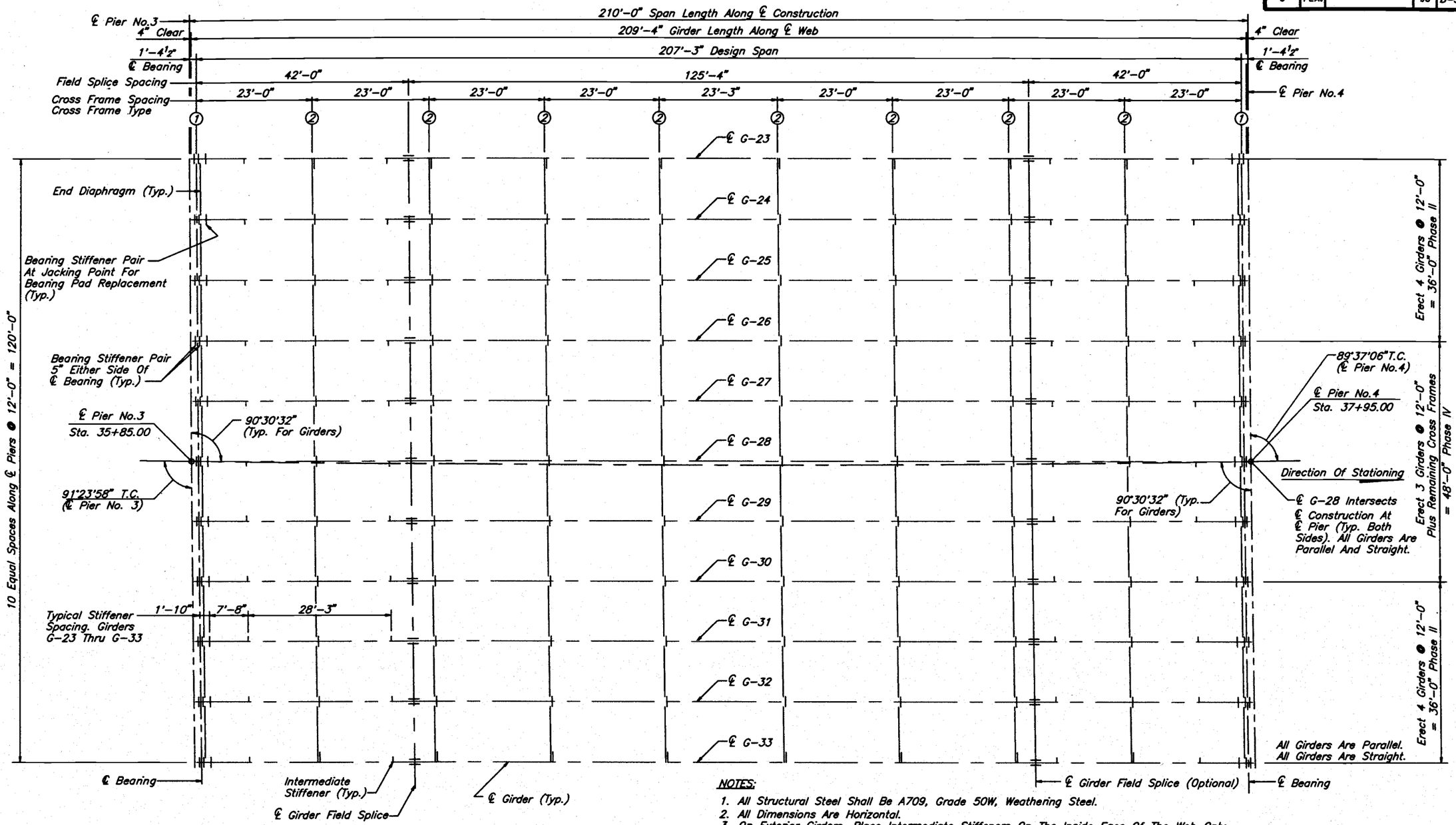

NOTES:

1. All Structural Steel Shall Be A709, Grade 50W, Weathering Steel.
2. All Dimensions Are Horizontal.
3. On Exterior Girders, Place Intermediate Stiffeners On The Inside Face Of The Web Only.
4. Ends Of Girders, Stiffener Plates, Bearing Stiffeners And Connection Plates Shall Be Vertical Upon Completion Of Construction.
5. All Cross Frames Shall Be Parallel To The ℄ Piers.
6. For Steel Girder Details, See Sheets B-40 Thru B-43.
7. For Additional Steel Girder Notes, See Sheet A-2.
8. For Field Splice Details, See Sheet B-42.
9. All Welding Design, Fabrication & Inspection Shall Be In Accordance With The Current AASHTO/AWS Bridge Welding Code.
10. Charpy V-Notch Impact Test Are Required For All Web Plates And Bottom Flange Plates Of The Girders.

REVISIONS

Date	By	Description	Date	By	Description

	Names	Dates
Drawn by	JJS	4/95
Checked by	MN	4/95
Designed by	MN	4/95
Checked by	PM	4/95
Approved by	Peeter Mannik, P.E.	

ENGINEER OF RECORD:
DYER, RIDDLE, MILLS AND PRECOURT, INC.
1505 EAST COLONIAL DRIVE
ORLANDO, FLORIDA 32803

LOGO:
DYER, RIDDLE, MILLS AND PRECOURT, INC.
ENGINEERS - SURVEYORS
1505 EAST COLONIAL DRIVE
ORLANDO, FLORIDA 32803

SEAL:

FLORIDA DEPARTMENT OF TRANSPORTATION
STRUCTURES DESIGN OFFICE

ROAD NO.	COUNTY	PROJECT NO.
SR414	SEMINOLE	F/002-3503

SHEET TITLE: FRAMING PLAN - SPAN 3

PROJECT NAME: MAITLAND BOULEVARD OVER LAKE BOSSE

Drawing No.

Index No.

FED. ROAD DIV. NO.	STATE	PROJECT NO.	TOTAL SHEETS	SHEET NO.
3	FLA.		98	B-40

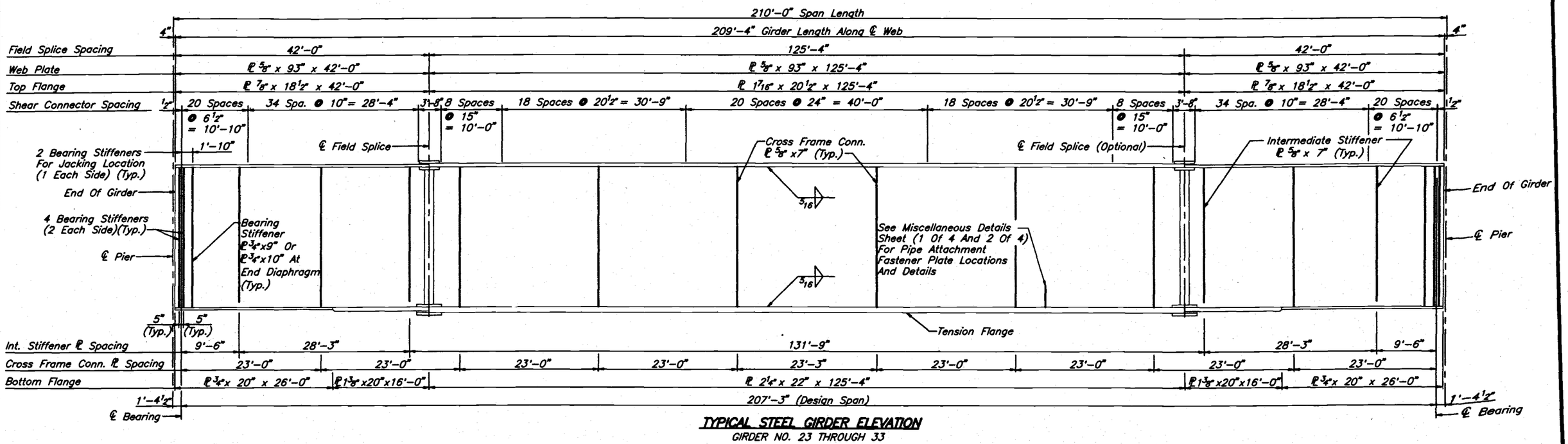

TYPICAL STEEL GIRDER ELEVATION

GIRDER NO. 23 THROUGH 33

Notes: 1. All Intermediate Stiffener Plates Are One Sided. All Cross Frame Connection Plates Are Two Sided Except At Exterior Beams. See The "FRAMING PLAN" For Locations.

2. The Web And The Bottom Flange Are Tension Members, And Shall Meet Zone 1 Of The Charpy V-Notch Toughness Requirements.

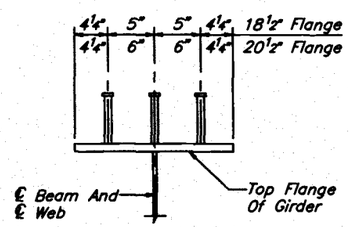

SECTION THRU GIRDER

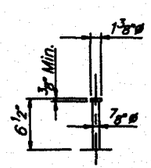

Typical Welded Stud (3 Per Row)

SHEAR CONNECTOR DETAILS

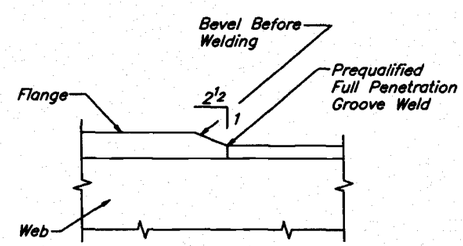

FLANGE THICKNESS TRANSITION

(Typ.- Except At Field Splice Locations)

REVISIONS					
Date	By	Description	Date	By	Description

	Names	Dates
Drawn by	JLA	9/94
Checked by	MN	9/94
Designed by	MN	9/94
Checked by	PM	9/94
Approved by	Peeter Mannik, P.E.	

ENGINEER OF RECORD: DYER, RIDDLE, MILLS AND PRECOURT, INC. 1505 EAST COLONIAL DRIVE ORLANDO, FLORIDA 32803

LOGO: DYER, RIDDLE, MILLS AND PRECOURT, INC. ENGINEERS - SURVEYORS 1505 EAST COLONIAL DRIVE ORLANDO, FLORIDA 32803

SEAL:

FLORIDA DEPARTMENT OF TRANSPORTATION
STRUCTURES DESIGN OFFICE

ROAD NO.	COUNTY	PROJECT NO.
SR414	SEMINOLE	77002-3503

SHEET TITLE: GIRDER ELEVATION

PROJECT NAME: MAITLAND BOULEVARD OVER LAKE BOSSE

Drawing No.

Index No.

JOB 07/21/98 11:18AM C:\USR\JLA\GIRDER1.DGN

FED. ROAD DIV. NO.	STATE	PROJECT NO.	FISCAL YEAR	SHEET NO.
3	FLA.		98	B-41

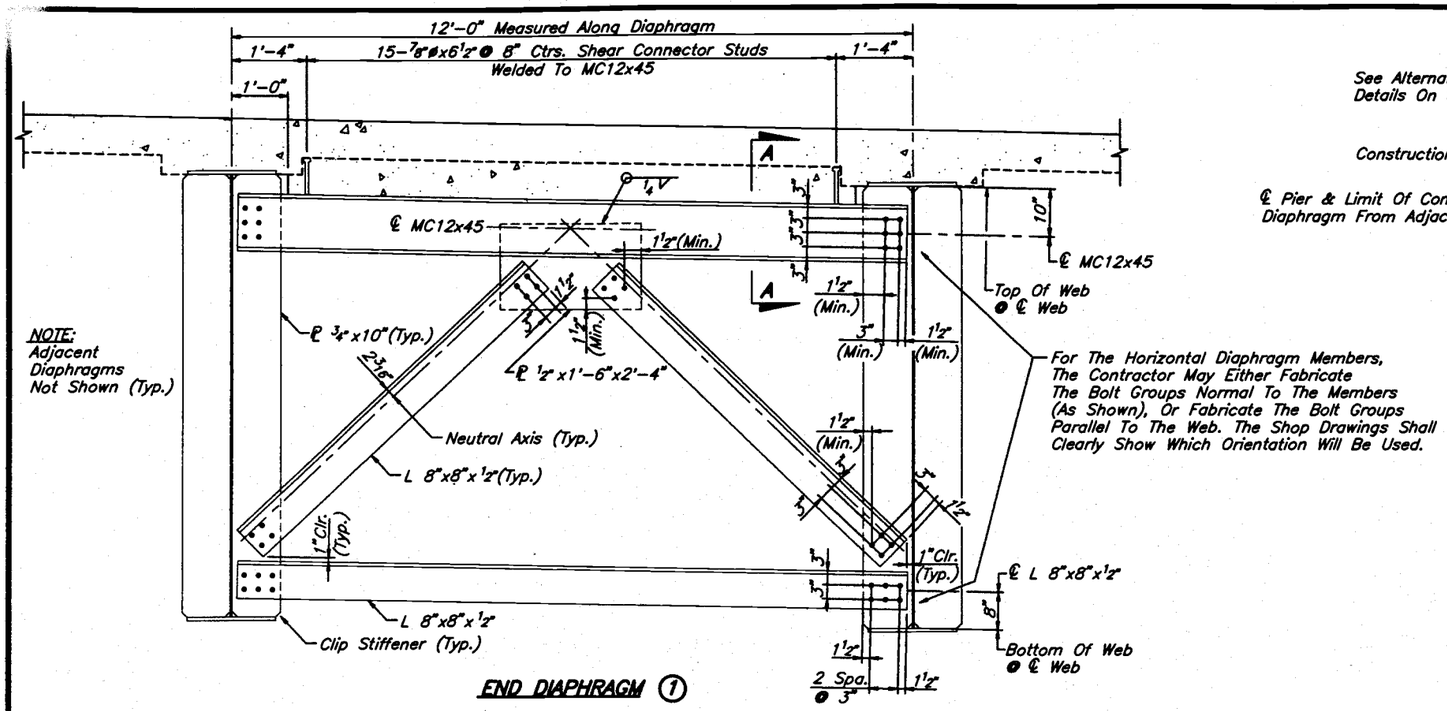

NOTE:
Adjacent Diaphragms Not Shown (Typ.)

For The Horizontal Diaphragm Members, The Contractor May Either Fabricate The Bolt Groups Normal To The Members (As Shown), Or Fabricate The Bolt Groups Parallel To The Web. The Shop Drawings Shall Clearly Show Which Orientation Will Be Used.

END DIAPHRAGM (1)

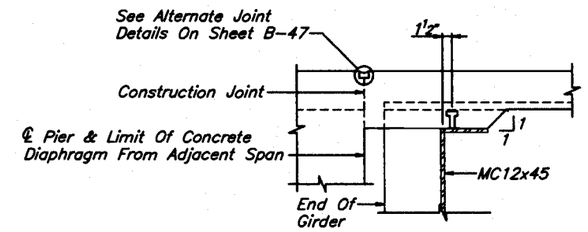

SECTION A-A

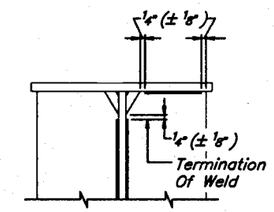

STIFFENER WELD TERMINATION DETAIL

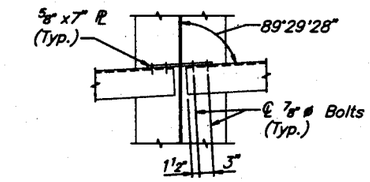

SECTION B-B

DIAPHRAGM AND CROSS FRAME NOTES:

1. Bolt Holes In Diaphragm And Cross Bracing Members Shall Be Oversized Holes (3/16" Larger Than The Bolt Diameter), Bolt Holes In The Connecting Stiffeners Shall Be Standard Holes.
2. All Bolts Shall Be 7/8"ø H.S. Bolts (Friction Type) Conforming To ASTM A325 (Type 3).
3. Diaphragms And Cross Bracing Located In The Beam Space Between Phases (Under The Pour Cap) Shall Not Be Installed Until The Pour Cap Is Complete.

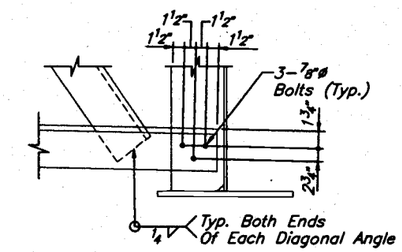

DETAIL "A"

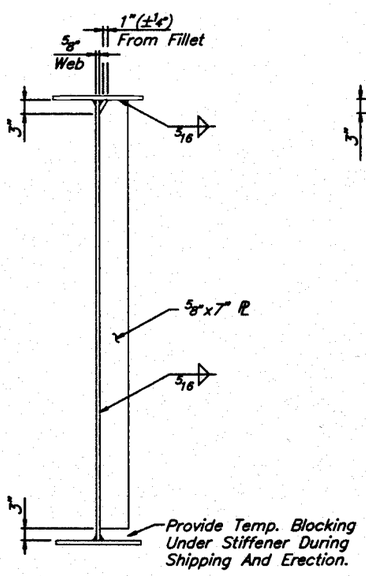

TRANSVERSE STIFFENER

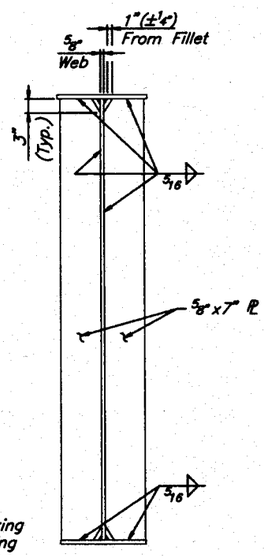

CROSS FRAME CONNECTION

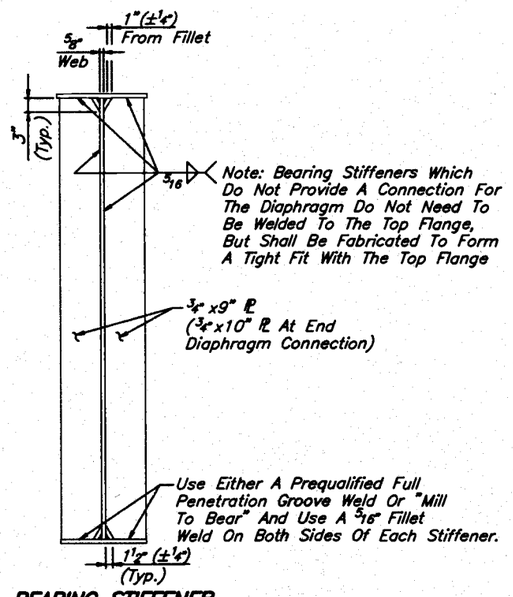

BEARING STIFFENER

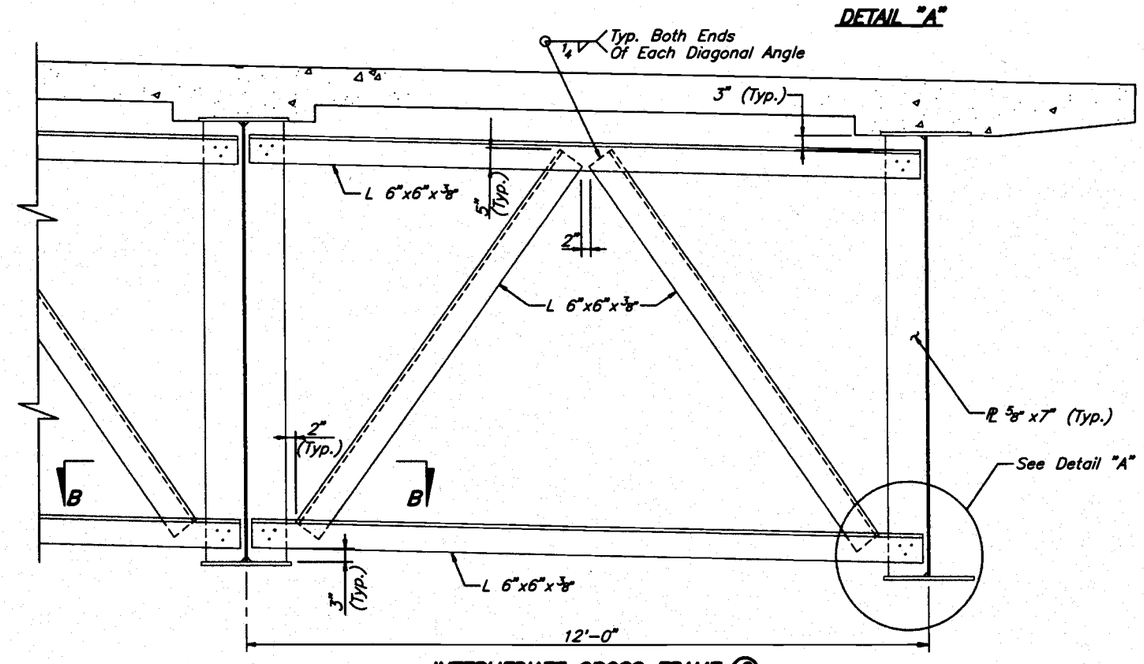

INTERMEDIATE CROSS FRAME (2)

REVISIONS					
Date	By	Description	Date	By	Description

	Names	Dates
Drawn by	JLA	5/94
Checked by	MN	5/94
Designed by	MN	5/94
Checked by	PM	5/94
Approved by	Peeter Mannik, P.E.	

ENGINEER OF RECORD:
DYER, RIDDLE, MILLS AND PRECOURT, INC.
1505 EAST COLONIAL DRIVE
ORLANDO, FLORIDA 32803

LOGO:
DYER, RIDDLE, MILLS AND PRECOURT, INC.
ENGINEERS - SURVEYORS
1505 EAST COLONIAL DRIVE
ORLANDO, FLORIDA 32803

SEAL:

FLORIDA DEPARTMENT OF TRANSPORTATION
STRUCTURES DESIGN OFFICE

ROAD NO.	COUNTY	PROJECT NO.
SR 414	SEMINOLE	77002-3503

SHEET TITLE: GIRDER DETAILS

PROJECT NAME: MAITLAND BOULEVARD OVER LAKE BOSSE

Drawing No. 1 OF 2

Index No.

J.L. 07/21/98 07:37AM C:\MRL\MRL\LAR\LABBRIDT.DWG

FED. ROAD DIV. NO.	STATE	PROJECT NO.	FISCAL YEAR	SHEET NO.
3	FLA.		98	B-42

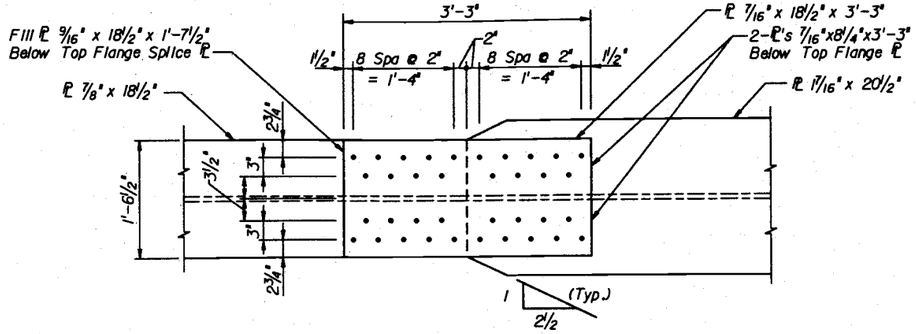

TOP FLANGE SPLICE

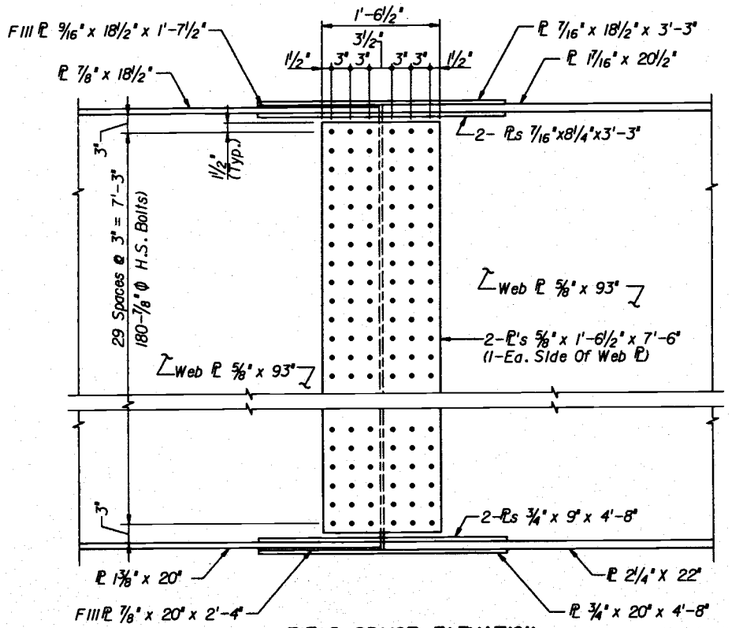

FIELD SPLICE ELEVATION

FIELD SPLICE NOTES:

1. All Splice Plates Shall Be In Accordance With A.S.T.M. Specification A-709 Steel (Grade 50W).
2. Charpy V-Notch Impact Properties Required For All Splice Plates. Impact Properties Shall Be In Accordance With Temperture Zone Designation 1.
3. All Parts Of Each Splice Shall Be Completely Shop Assembled Taking Into Account Their Relative Position In The Finished Structure Due To Grade, Camber, And Curvature Including Their Location Relative To The Shear Connectors. Sections Shall Be Matchmarked While So Assembled. General Reaming Of Holes For Each Field Splice Will Be Required While All Parts Are Completely Shop Assembled In The Correct Position.
4. All Bolts Shall Be 7/8"Ø High Strength Bolts (Friction Type). High Strength Bolts Shall Conform To The Requirements Of The ASTM A-325, Type 3. Girder Field Splices Shall Be Bolted Friction Type Connections Using Standard Size Holes (1/16" Larger Than Bolt Diameter). Bolts And Washers Shall Be Sized Such That The Threads Are Excluded From The Shear Planes A Distance Equal To Two Pitch Increments.

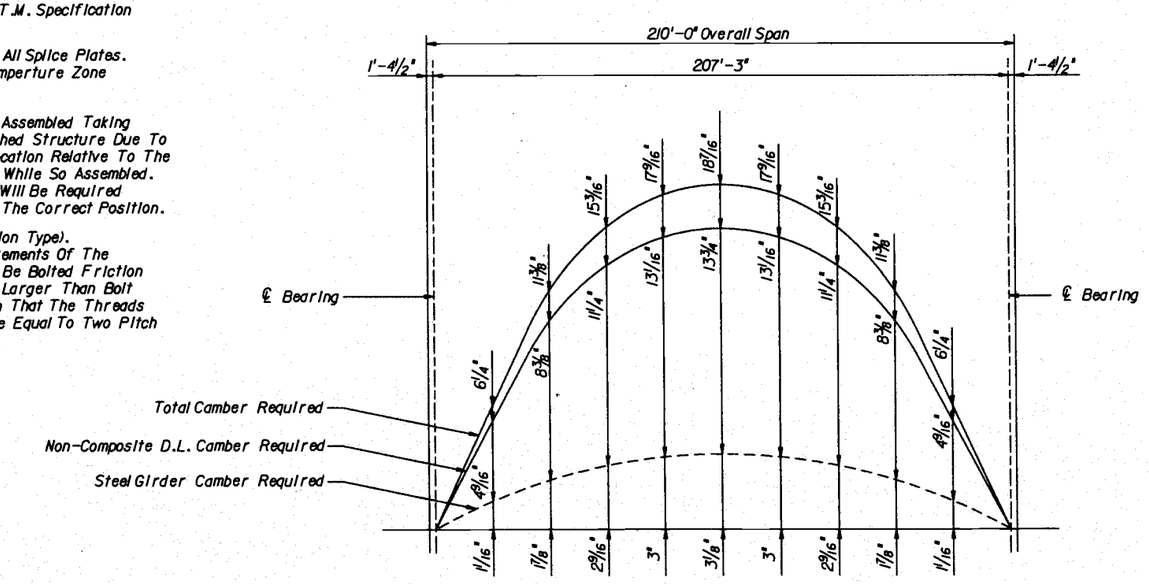

CAMBER DIAGRAM

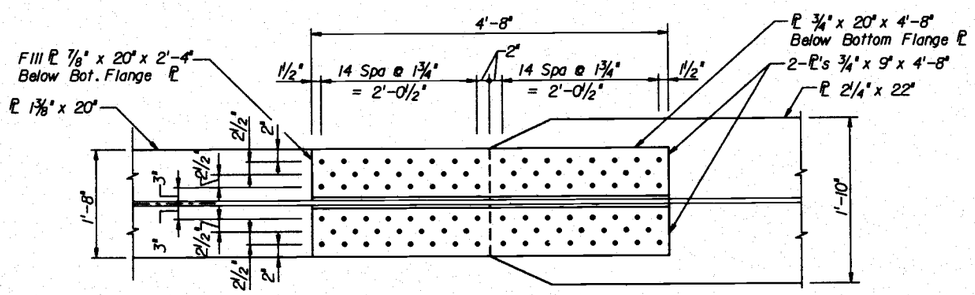

BOTTOM FLANGE SPLICE

CAMBER NOTES

1. Total Camber Includes Deflections Due To Steel Girder Dead Load, Total Concrete Dead Load Including Composite Dead Load And Vertical Curve.
2. Non-Composite Dead Load Camber Includes Dead Load Of Steel Girder And Concrete Deck Pour.
3. Steel Girder Camber Includes Deflections Due To Girder Self Weight Only.
4. Ordinates Computed Along ℄ Girders At Each 10 Equal Spaces Between ℄ Bearings.
5. Girders Shall Be Fabricated To Provide For The Total Dead Load Deflection And The Vertical Curve (Total Camber Required).

REVISIONS					
Date	By	Description	Date	By	Description

	Names	Dates
Drawn by	JJS	4/95
Checked by	MN	4/95
Designed by	MN	4/95
Checked by	PM	4/95
Approved by	Peeter Mannik, P.E.	

ENGINEER OF RECORD: DYER, RIDDLE, MILLS AND PRECOURT, INC. 1505 EAST COLONIAL DRIVE ORLANDO, FLORIDA 32803

LOGO: DYER, RIDDLE, MILLS AND PRECOURT, INC. ENGINEERS - SURVEYORS 1505 EAST COLONIAL DRIVE ORLANDO, FLORIDA 32803

SEAL:

FLORIDA DEPARTMENT OF TRANSPORTATION
STRUCTURES DESIGN OFFICE

ROAD NO.	COUNTY	PROJECT NO.
SR414	SEMINOLE	77002-3503

SHEET TITLE: GIRDER DETAILS

PROJECT NAME: MAITLAND BOULEVARD OVER LAKE BOSSE

Drawing No. 2 of 2

Index No.

LABSTDT.DGN

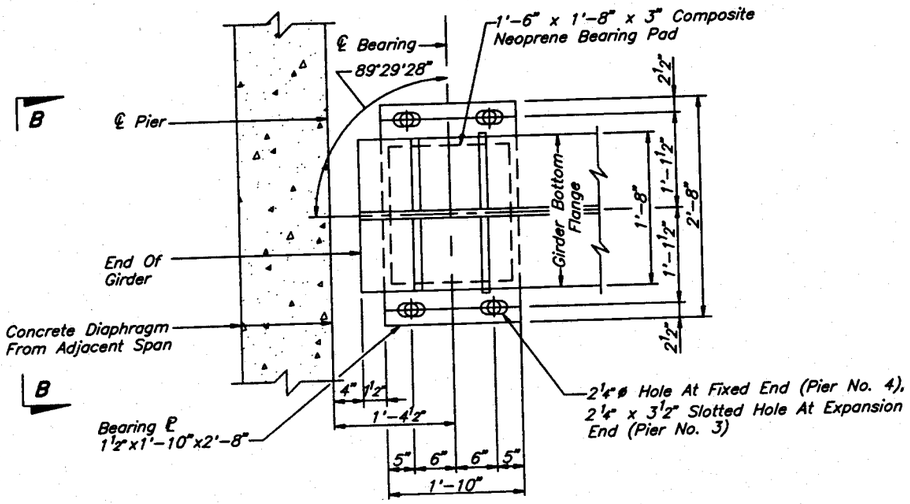

SECTION A-A

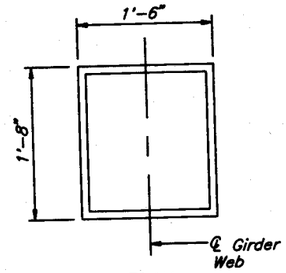

PLAN

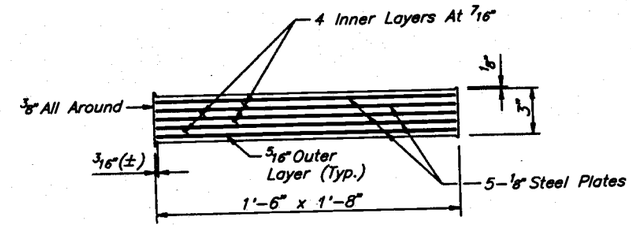

TYPICAL SECTION

NON - STANDARD COMPOSITE PAD

No. Req'd - 22 Units Total

COMPOSITE PAD NOTES

1. All Neoprene In Bearing Pads Shall Have A Grade 50 Durometer Hardness.
2. Steel Plates In Composite Bearing Pads Shall Conform To AASHTO M-251.
3. Variations In Pad Dimensions Will Be Allowed. Revised Pads Shall Meet The Current Specifications And Shall Be Approved By The Engineer.
4. Steel Bearing Plates, Anchor Bolts, Nuts And Washers Shall Be Hot Dip Galvanized In Accordance With A.S.T.M. Specification A-123. Payment For Steel Bearing Plate Assemblies Shall Be Included In The Contract Unit Price For Structural Steel.
5. Composite Neoprene Pads Shall Meet All Requirements Of The F.D.O.T. Specifications, Section 932-2.
6. The Contractor Shall Furnish All Neoprene Pads, And Shall Submit Shop Drawings For Approval Prior To Fabrication.

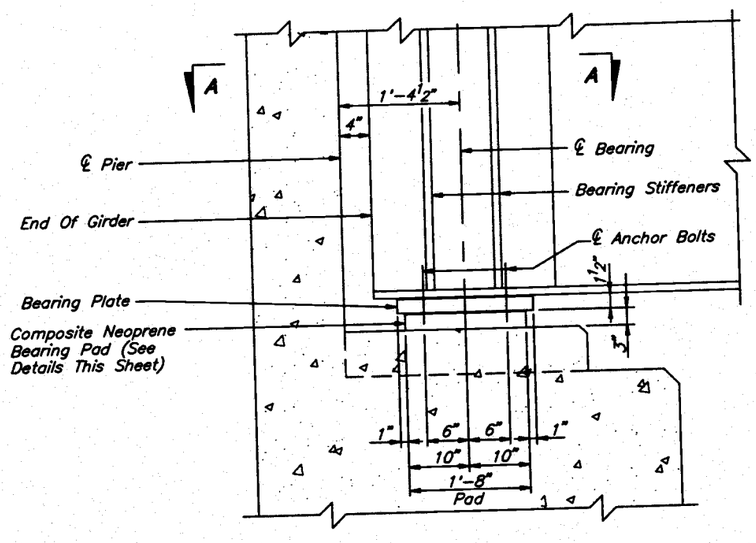

PART SECTION THRU GIRDER END

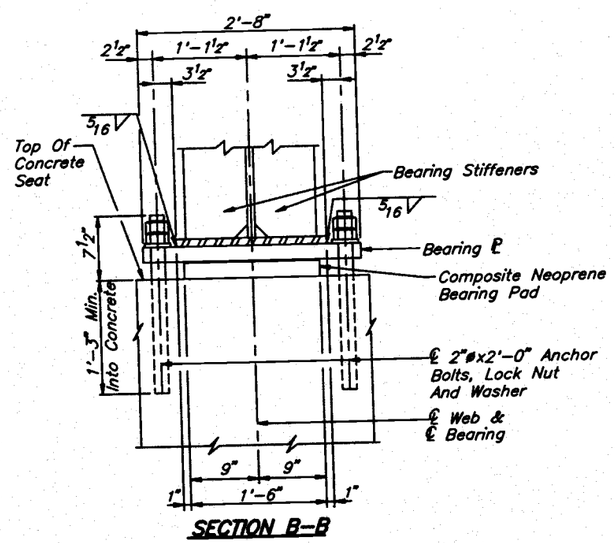

SECTION B-B

BEARING DETAILS

REVISIONS					
Date	By	Description	Date	By	Description

	Names	Dates
Drawn by	JJS	5/95
Checked by	MN	5/95
Designed by	MN	5/95
Checked by	PM	5/95
Approved by	PEETER MANNIK, P.E.	

ENGINEER OF RECORD: DYER, RIDDLE, MILLS AND PRECOURT, INC. 1505 EAST COLONIAL DRIVE ORLANDO, FLORIDA 32803

LOGO: DYER, RIDDLE, MILLS AND PRECOURT, INC. ENGINEERS - SURVEYORS 1505 EAST COLONIAL DRIVE ORLANDO, FLORIDA 32803

SEAL:

FLORIDA DEPARTMENT OF TRANSPORTATION
STRUCTURES DESIGN OFFICE

ROAD NO.	COUNTY	PROJECT NO.
SR414	SEMINOLE	77002-3503

SHEET TITLE: BEARING DETAILS - SPAN 3

PROJECT NAME: MAITLAND BOULEVARD OVER LAKE BOSSE

Drawing No.

Index No.

07/14/98 1:53PM C:\PROJECT\MAITLAND\MAITLAND.DGN

FED. ROAD DIV. NO.	STATE	PROJECT NO.	FISCAL YEAR	SHEET NO.
	FLA.			B-44

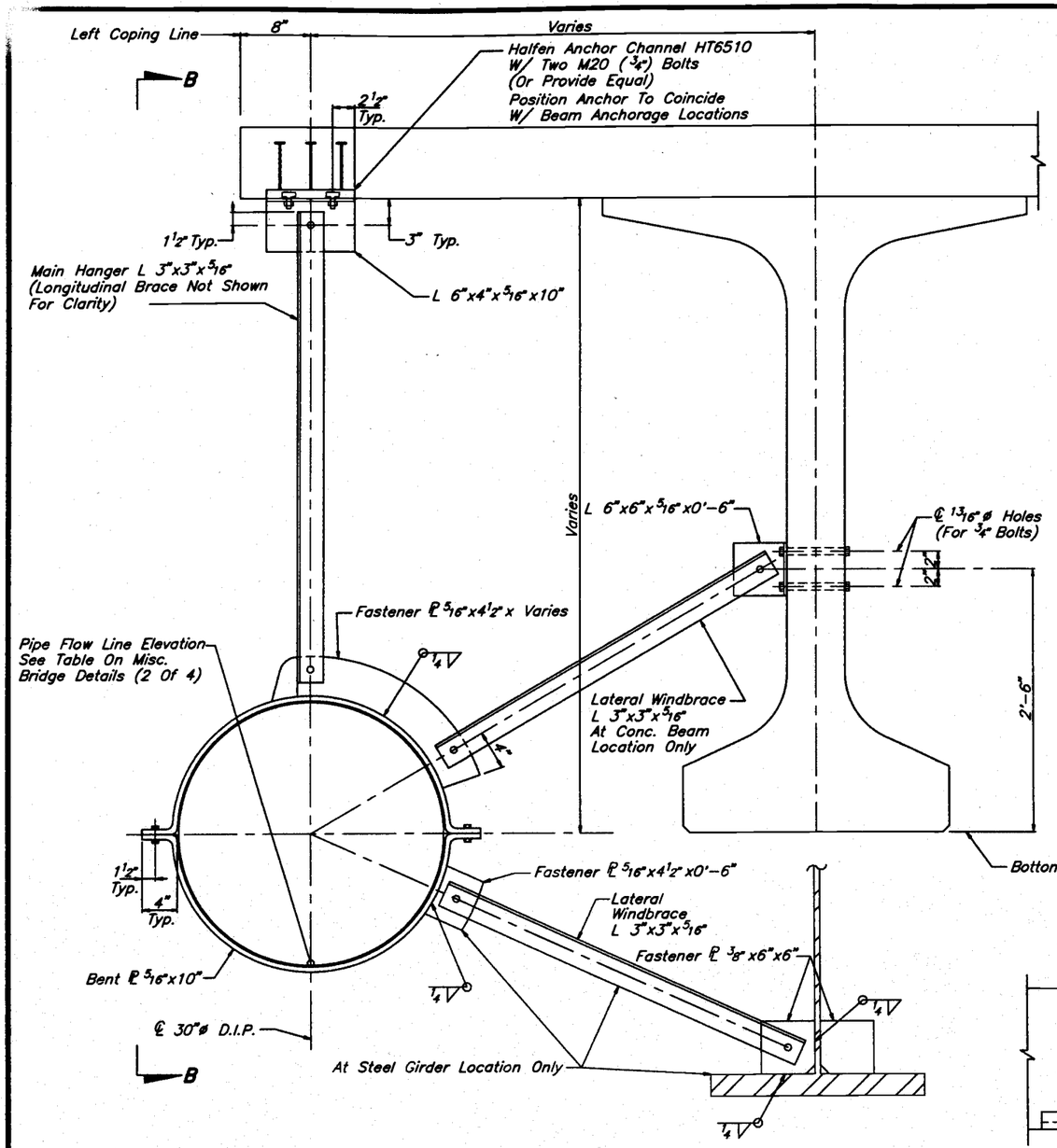

PIPE HANGER DETAIL
BRACED HANGER SHOWN
(SEE NOTE 1)

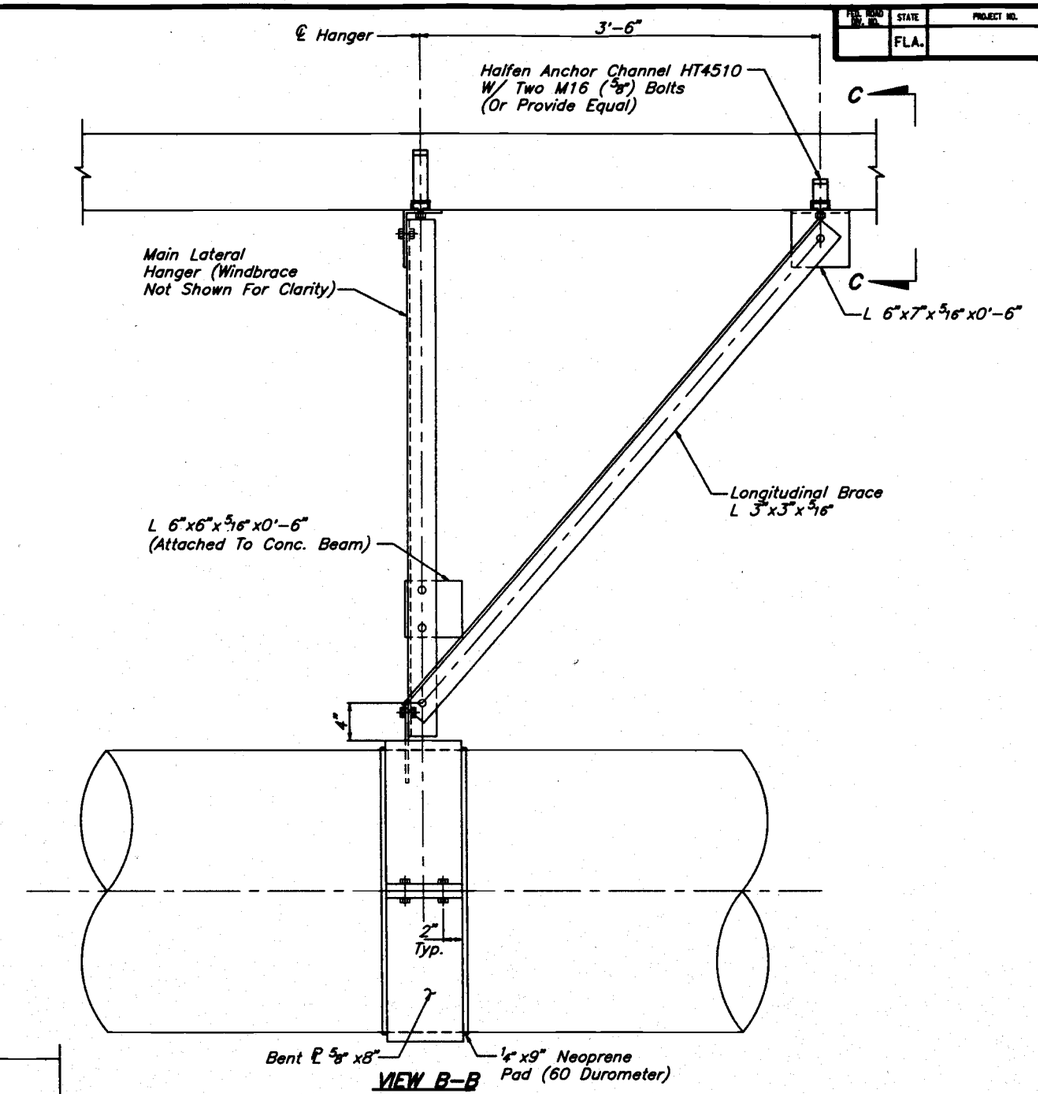

VIEW B-B

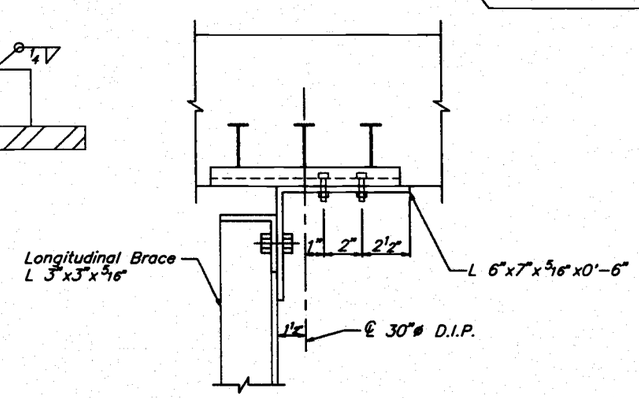

VIEW C-C

NOTES:

1. Hanger Types:
   Type A – Includes Main Hanger Only
   Type B – Includes Main Hanger, Lateral Wind Brace & Longitudinal Brace.
   For Hanger Type Location See Pipe Hanger Location Table, Miscellaneous Bridge Deatils, (2 OF 4).
2. All Supports And Attachment Hardware Shall Be ASTM A36 Steel And Hot Dipped Galvanized After Fabrication.
3. All Bolts And Nuts Are 3/4"ø And Shall Be 304 ST. STL. (U.N.O.)
4. Complete Sign & Sealed Drawings For Pipe Attachment Assembly Is Required.
5. Payment: The Cost Of The Pipe Hanger Assembly Shall Be Paid For Under Pay Item 1622-11-33 Bridge Hanger Anchor And Shall Include Anchorage, Neoprene Pads And Misc. Steel. The Cost Of The Ductile Iron Pipe Shall Be Paid For Under Pay Item 1613-140-233.
6. The Ductile Iron Pipe Shall Be A Push-On Joint type (Fastite Or Equal) With Class 150 Material Grade. The Pipe Lining Shall Be Per A.W.W.A. C-104.

REVISIONS

Date	By	Description	Date	By	Description

	Names	Dates
Drawn by	JLA	9/94
Checked by	MKA	9/94
Designed by	MKA	9/94
Checked by	PM	9/94
Approved by	Peeter Mannik, P.E.	

ENGINEER OF RECORD:
DYER, RIDDLE, MILLS AND PRECOURT, INC.
1505 EAST COLONIAL DRIVE
ORLANDO, FLORIDA 32803

LOGO:
DYER, RIDDLE, MILLS AND PRECOURT, INC.
ENGINEERS - SURVEYORS
1505 EAST COLONIAL DRIVE
ORLANDO, FLORIDA 32803

SEAL:

FLORIDA DEPARTMENT OF TRANSPORTATION
STRUCTURES DESIGN OFFICE

ROAD NO.	COUNTY	PROJECT NO.
	SEMINOLE	77002-3503

SHEET TITLE: MISCELLANEOUS BRIDGE DETAILS

Drawing No. 1 OF 4

PROJECT NAME: MAITLAND BOULEVARD OVER LAKE BOSSE

Index No.

A.S. 07/26/96 5:32PM C:\USR\MEN\LAN\LIBRARY\

FOLD HOLE DIV. NO.	STATE	PROJECT NO.	FISCAL YEAR	SHEET NO.
3	FLA.		98	B-48

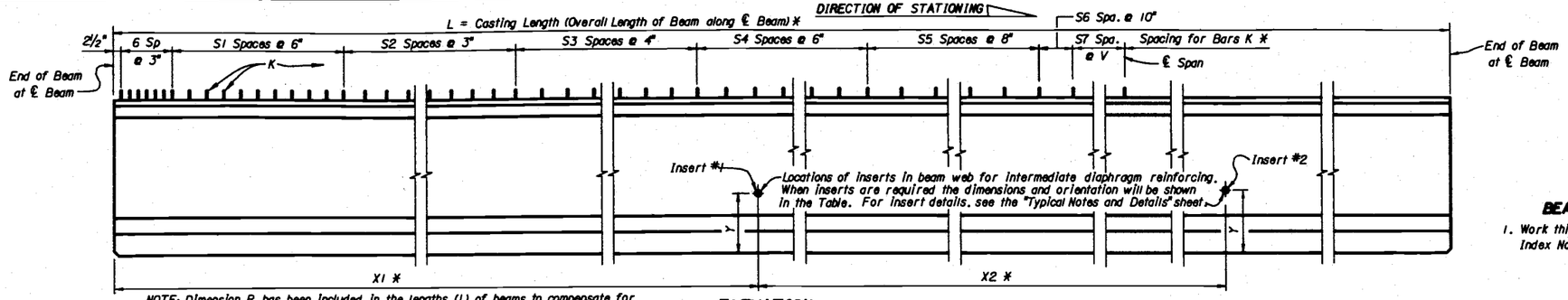

NOTE: Dimension R has been included in the lengths (L) of beams to compensate for elastic and time-dependent shortening effects.

ELEVATION

BEAM NOTES

1. Work this sheet with Standard Index No. 110.

* Note: All longitudinal beam dimensions shown on this sheet with a single asterisk (*) are measured along the top of the beam at the centerline of beam.

** Note: End of beam bearing dimensions "J" and "K" are measured along the bottom of the beam.

BILL OF REINFORCING STEEL FOR ONE BEAM ONLY

MARK	SIZE	NO. REQUIRED	LENGTH (1)
A	5	8	See Table
D (2)(6)	3	38	Varies 5'-11" Min
K (2)	4	See Table	7'-9"
L (3)(4)	4	22	6'-8"
M	4	See Table	3'-0"
N (5)	⅜"Ø Strand	4	See Table
Z (2)	4	28	7'-6"

BENDING DIAGRAMS(1)

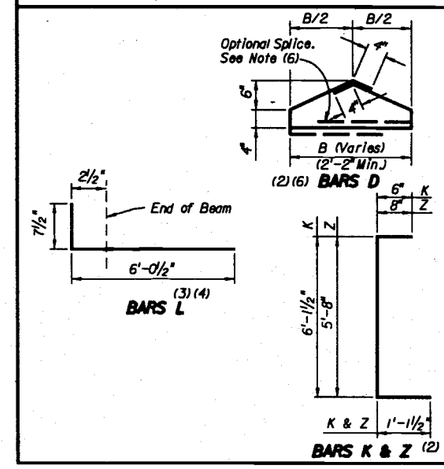

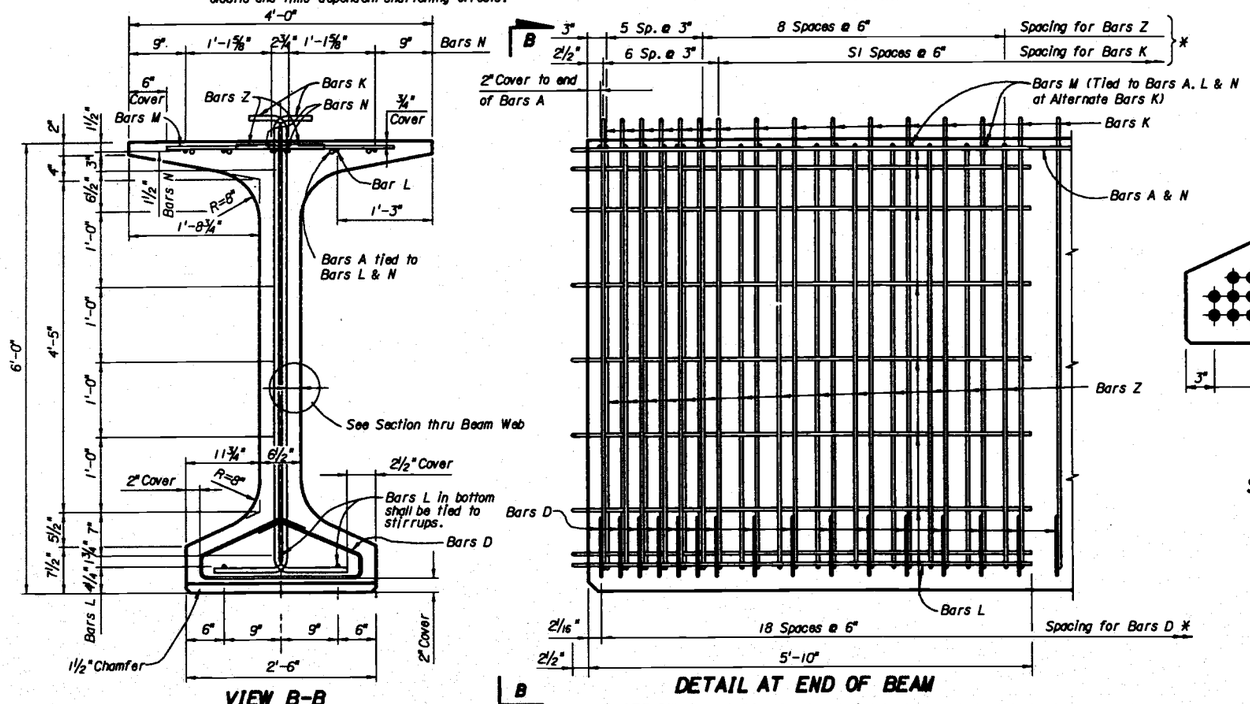

VIEW B-B

(With strands omitted, see Table for reference to strand pattern)

DETAIL AT END OF BEAM

NOTE: Stirrups shall be placed and tied to the top of the fully bonded prestressing strands in the bottom row.

‡ Dimension K: 11½" @ Pier; 1'-0¼" @ End Bent
NOTE: Place Bars K and Z one (1) each space (alternate).

½" Dia. -270K Low Relaxation Strands. Area/Strand = 0.153 In. Pull Each Strand To 30.98 Kips Per Strand

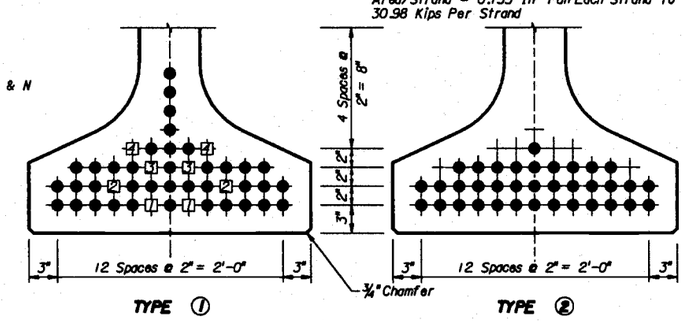

TYPE ① TYPE ②

STRAND PATTERNS AND DEBONDING SCHEDULE

NOTE:
- ● - Indicates fully bonded strands.
- 1 - Indicates referenced pair of strands to be debonded 30'-0" which is measured from the end of the beam. *
- 2 - Indicates referenced pair of strands to be debonded 20'-0" which is measured from the end of the beam. *
- 3 - Indicates referenced pair of strands to be debonded 10'-0" which is measured from the end of the beam. *
- 4 - Indicates referenced pair of strands to be debonded 5'-0" which is measured from the end of the beam. *

NOTES:

(1) All bar dimensions are out-to-out.

(2) Bars D, K, and Z shall be bent around pins having the following diameters for respective sizes:

Bar Size	Pin Diameters
#3	1"
#4	2"

(3) Bars L shall be bent prior to the beam leaving the prestressing yard. For treatment of bars L at skewed beam ends, see "Plan Ends of Beams".

(4) Caution should be used with Bars L in the ends of exterior beams to assure that the bent portion of the bar is properly oriented so that the bar will be embedded in the diaphragm concrete.

(5) Bars N shall be either ASTM A416, Grade 250 or 270, seven-wire strands ⅜" diameter or larger, stressed to 10,000 pounds each.

(6) The minimum Dimension B and length of Bars D shown apply to one-piece Bars D placed perpendicular to the centerline of the beam. Dimension B and the length of Bars D for beams with skewed ends vary with the skew (See "Plan Ends of Beams").
At the Contractor's option, Bars D may be fabricated either as a two-piece bar with a 1'-2" lap splice of the bottom legs or may be welded wire fabric, one or two-piece, provided the wire size and spacing furnishes the same steel area as the No. 3 Bars shown.

(7) (NS) means Near Side and (FS) means Far Side, both referring to which face of the beam web is to receive the insert for the dimensioned location. (NS) and (FS) are referenced to the DIRECTION OF STATIONING shown.

(8) Optional Stranding Shall Comply In All Respects With The Department's Structures Design Guidelines.

TABLE OF BEAM VARIABLES

BEAM ID.	CONCRETE PROPERTIES: CLASS	STRENGTHS: REL. (f'ci)	STRENGTHS: 28-DAY (f'c)	STND PTRN TYPE	PLAN VIEW CASE	END ELEV COND.	BRG. PLATE CASE	END OF BEAM AND BEARING DIMENSIONS **: ANGLE Ø	DIM P	DIM J	DIM K	BEAM DIMENSIONS *: DIM L	DIM R	DIM V	NUMBER OF SPACES FOR STIRRUP BARS K: S1	S2	S3	S4	S5	S6	S7	DIAPHRAGM INSERT LOCATIONS*: DIM X1	DIM X2	DIM Y	NS/FS (8): #1	#2	REINFORCING STEEL: A LENGTH*	K NO. REQ'D	M NO. REQ'D	N LENGTH*
B-1 Thru B-11	V	4500	6500	2	2	2	N/A	92°34'34"	½"	6½"	‡	91'-8⅞"	⅝"	0'-9 9/16"	8	0	28	10	0	30	1	-	-	-	-	-	13'-10"	167	84	92'-3"
B-12 Thru B-22	V	4500	6500	2	2	2	N/A	91°47'29"	7/16"	6½"	11½"	91'-9⅝"	⅝"	0'-10 5/16"	8	0	28	10	0	30	1	-	-	-	-	-	13'-10"	167	84	92'-3"
B-34 Thru B-44	V	4500	6500	1	3	3	N/A	89°11'14"	½"	6½"	11½"	100'-11⅞"	13/16"	1'-1"	8	16	21	16	27	8	1	-	-	-	-	-	15'-2"	207	104	101'-5"
B-45 Thru B-55	V	4500	6500	1	3	3	N/A	88°19'30"	9/16"	6½"	11½"	100'-11⅞"	13/16"	1'-1"	8	16	21	16	27	8	1	-	-	-	-	-	15'-2"	207	104	101'-5"
B-56 Thru B-66	V	4500	6500	1	3	3	N/A	87°27'46"	9/16"	6½"	‡	100'-11⅛"	13/16"	1'-0¼"	8	16	21	16	27	8	1	-	-	-	-	-	15'-2"	207	104	101'-5"

REVISIONS: Date	By	Description	Date	By	Description
			92R		

	Names	Dates
Drawn by	JJS	6/95
Checked by	KCH	6/95
Designed by	KCH	6/95
Checked by		
Approved by		

ENGINEER OF RECORD: DYER, RIDDLE, MILLS AND PRECOURT, INC. 1505 EAST COLONIAL DRIVE ORLANDO, FLORIDA 32803

LOGO: DYER, RIDDLE, MILLS AND PRECOURT, INC. ENGINEERS - SURVEYORS 1505 EAST COLONIAL DRIVE ORLANDO, FLORIDA 32803

SEAL:

FLORIDA DEPARTMENT OF TRANSPORTATION
STRUCTURES DESIGN OFFICE

ROAD NO.	COUNTY	PROJECT NO.
SR414	SEMINOLE	77002-3503

SHEET TITLE: FLORIDA BULB-T 72 BEAMS

PROJECT NAME: MAITLAND BOULEVARD OVER LAKE BOSSE

Drawing No. 1 of 1

Index No. S-113

PD&E Plans

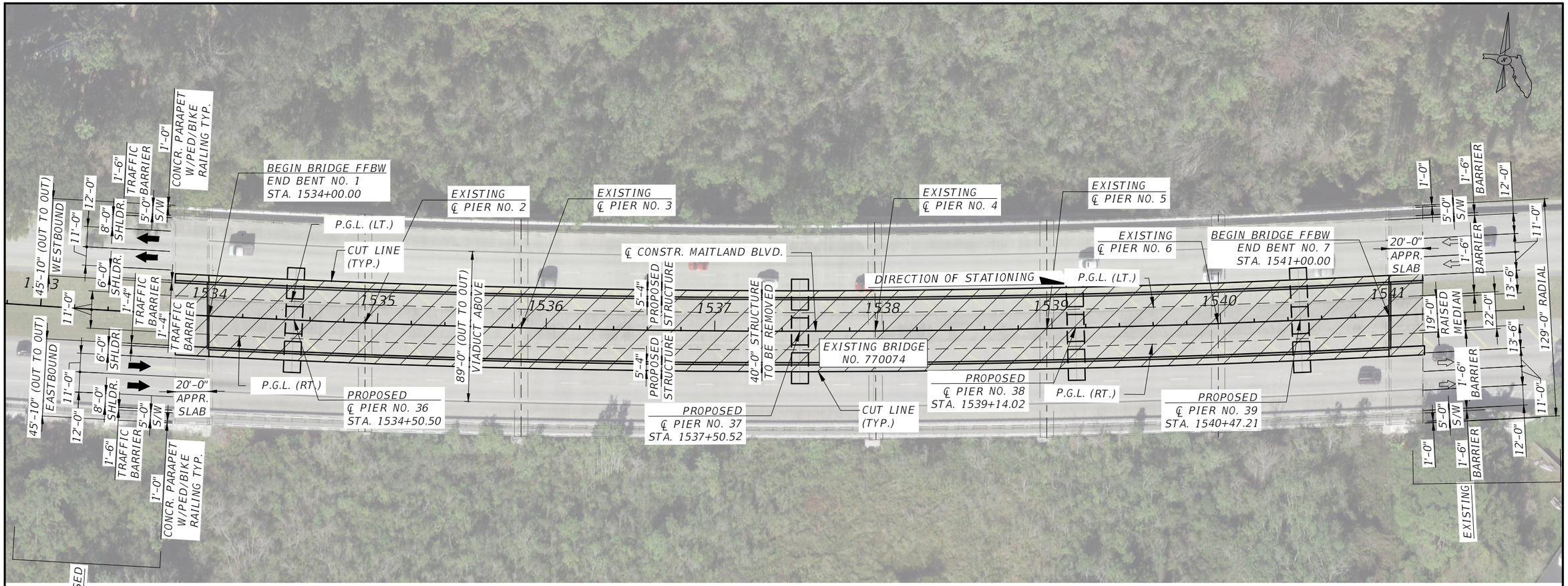

PLAN

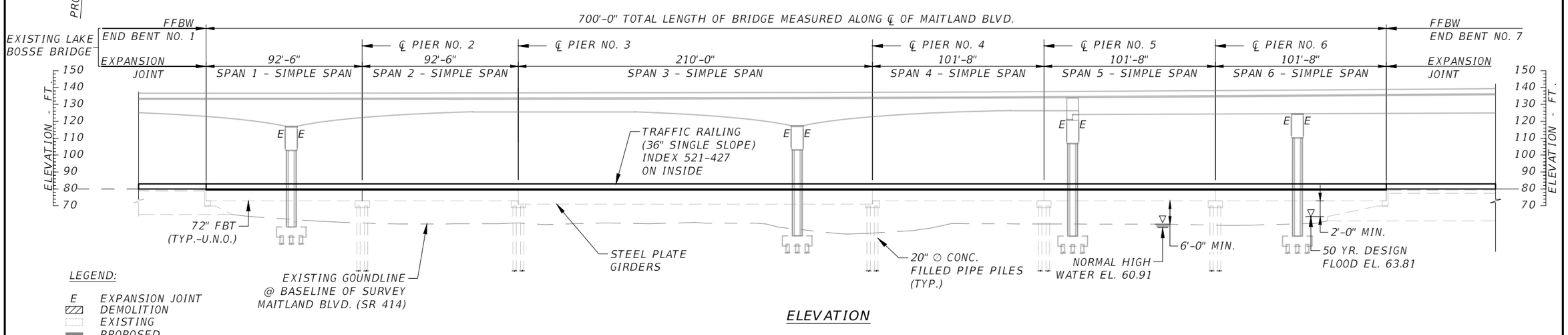

ELEVATION

REVISIONS			
DATE	DESCRIPTION	DATE	DESCRIPTION

RAM KOZHIKOTE
P.E. LICENSE NUMBER 44022
BASE CONSULTANTS
1214 EAST CONCORD STREET
ORLANDO, FL 32803

SR 414 MAITLAND BLVD.
EXPRESSWAY EXTENSION
US 441 TO SR 434

ROAD NO.	PROJECT NO.
SR 414	414-227

CENTRAL FLORIDA EXPRESSWAY AUTHORITY

SHEET TITLE: PLAN AND ELEVATION

PROJECT NAME: SR 414 (MAITLAND BLVD.) OVER LAKE BOSSE

REF. DWG. NO.

SHEET NO. B2-1

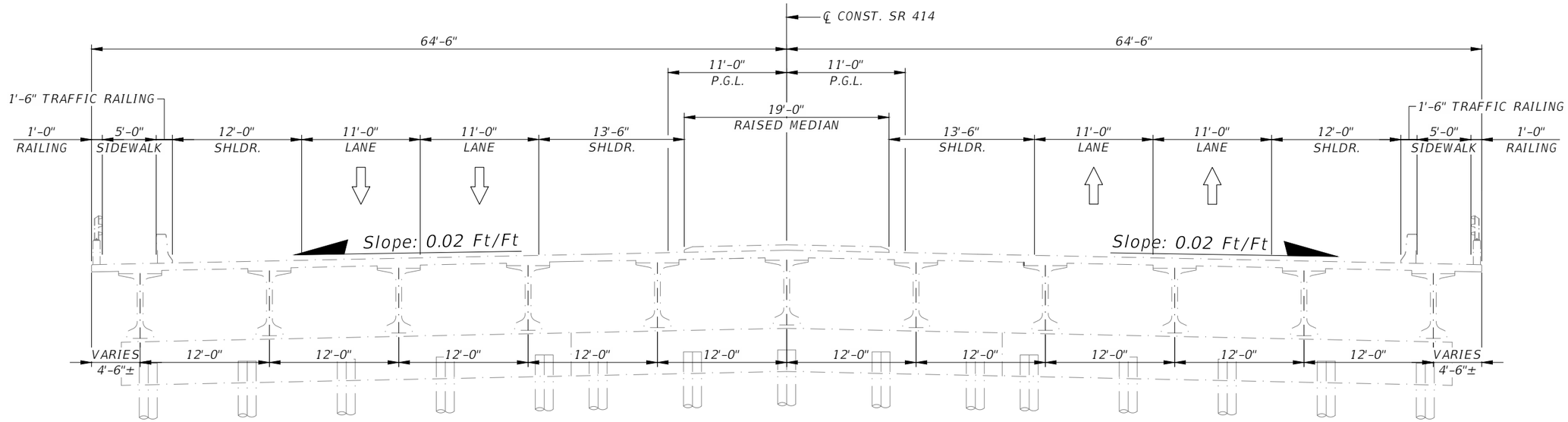

EXISTING TYPICAL SECTION

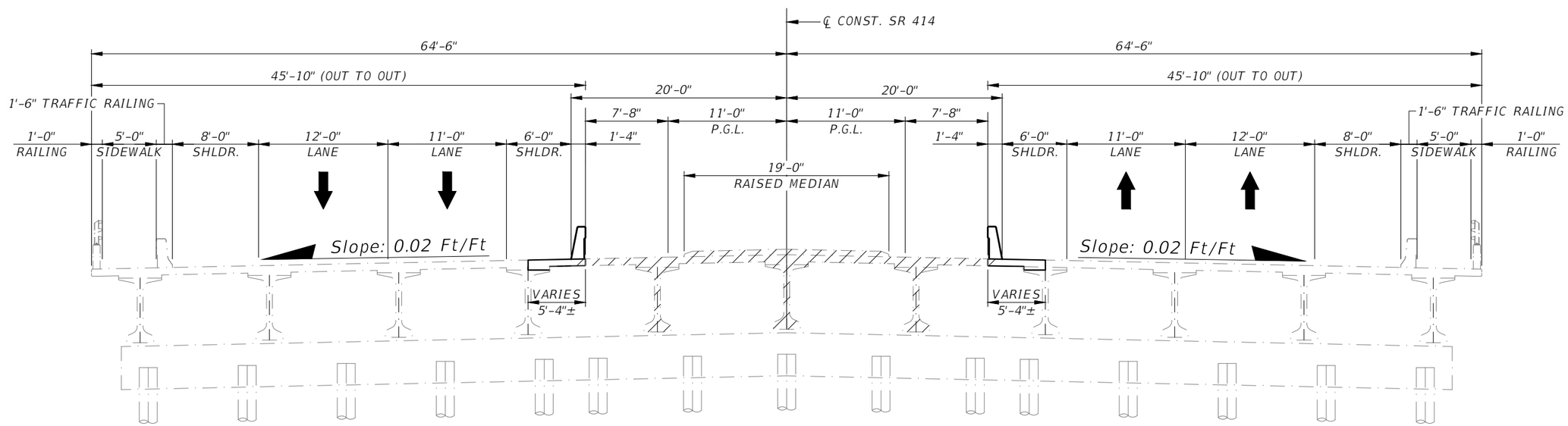

WESTBOUND BRIDGE

PROPOSED TYPICAL SECTION

EASTBOUND BRIDGE

LEGEND

EXISTING STRUCTURE TO BE REMOVED

REVISIONS			
DATE	DESCRIPTION	DATE	DESCRIPTION

RAM KOZHIKOTE
P.E. LICENSE NUMBER 44022
BASE CONSULTANTS
1214 EAST CONCORD STREET
ORLANDO, FL 32803

SR 414 MAITLAND BLVD.
EXPRESSWAY EXTENSION
US 441 TO SR 434

ROAD NO.	PROJECT NO.
SR 414	414-227

CENTRAL FLORIDA EXPRESSWAY AUTHORITY

SHEET TITLE: TYPICAL BRIDGE SECTION

REF. DWG. NO.

PROJECT NAME: SR 414 (MAITLAND BLVD.) OVER LAKE BOSSE

SHEET NO. B2-2

THE OFFICIAL RECORD OF THIS SHEET IS THE ELECTRONIC FILE DIGITALLY SIGNED AND SEALED UNDER RULE 61G15-23.004, F.A.C.

4. Calculations

a. LEAP Concrete Bridge Input – Span 1 and 2

PROJECT DATA

Project:	SR 417 OVER LAKE BOSSE
Designer:	KV
Date:	Jan/7/2021
Checked By:	RK
Date Checked:	Jan/7/2021
User job number:	
State:	FL, State Job #:CFX # 414-227
State Specification:	None
Design Code:	AASHTO LRFD - 8th Edition
Units:	US
Span Type:	Multi-Span (Continuous)
Flared Girder:	No
File Name:	C:\Users\KaranBASE\AppData\Local\Temp\OBD20210802104510442\Standalone\Standalone2\Span-1-2EB(5ft).lbcx

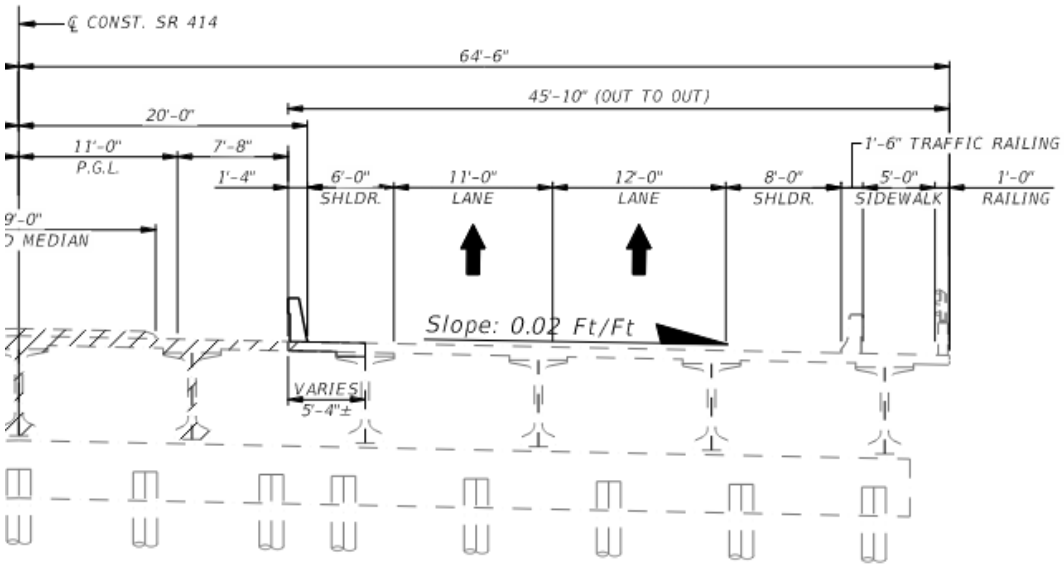

TYPICAL SECTION

EASTBOUND BRIDGE

GEOMETRY DATA

BRIDGE LAYOUT

Overall Width (ft)	45.844
Left curb (ft)	1.500
Right curb (ft)	1.500
Curb-to-curb width (ft)	42.844
Number of spans	2
Number of lanes	3
Lane width (ft)	12.000
Eff Deck thick (in)	8.000
Sacrificial thick (in)	0.000
Haunch thickness (in)	2.000
Haunch width (in)	48.000

SPAN DATA

Span	Pier-to-pier ft	Precast ft	Brg-to-brg ft	Pier CL ft	Release ft	StartSkew	EndSkew	Bridge c/s M.I. in4
1	92.500	92.000	90.999	0.000	92.000	2.97	2.18	6230230.50
2	92.500	92.000	90.999	0.500	92.000	2.18	2.40	6230230.50

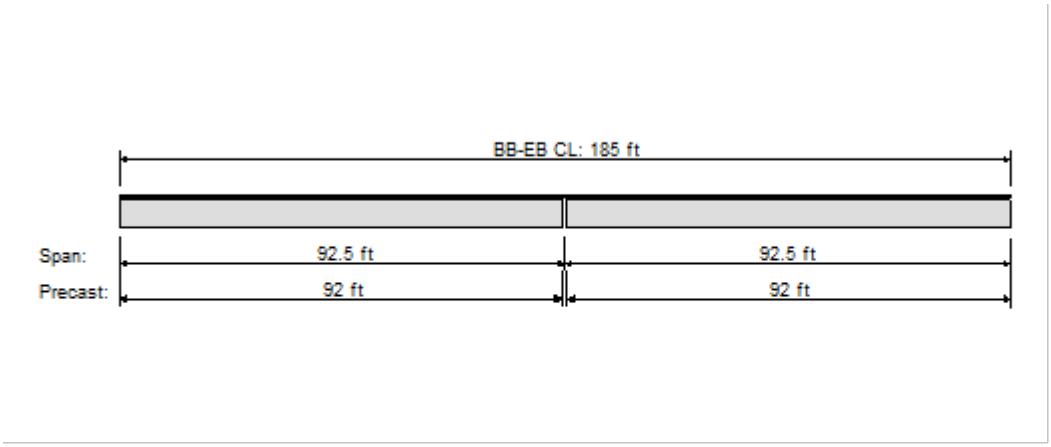

BR01 - Bridge elevation

BEAM DATA

Span: 1

No	ID	Loc-prev ft	Area in2	MI(Ixx) in4	Height in	Yb in	B-topg in	B-trib ft
1	Florida bulb tee-72	5.330	901.1	639096.4	72.00	34.34	48.00	11.330
2	Florida bulb tee-72	12.000	901.1	639096.4	72.00	34.34	48.00	12.000
3	Florida bulb tee-72	12.000	901.1	639096.4	72.00	34.34	48.00	12.000
4	Florida bulb tee-72	12.000	901.1	639096.4	72.00	34.34	48.00	10.514

Span: 2

No	ID	Loc-prev ft	Area in2	MI(Ixx) in4	Height in	Yb in	B-topg in	B-trib ft
1	Florida bulb tee-72	4.511	901.1	639096.4	72.00	34.34	48.00	10.511
2	Florida bulb tee-72	12.000	901.1	639096.4	72.00	34.34	48.00	12.000
3	Florida bulb tee-72	12.000	901.1	639096.4	72.00	34.34	48.00	12.000
4	Florida bulb tee-72	12.000	901.1	639096.4	72.00	34.34	48.00	11.333

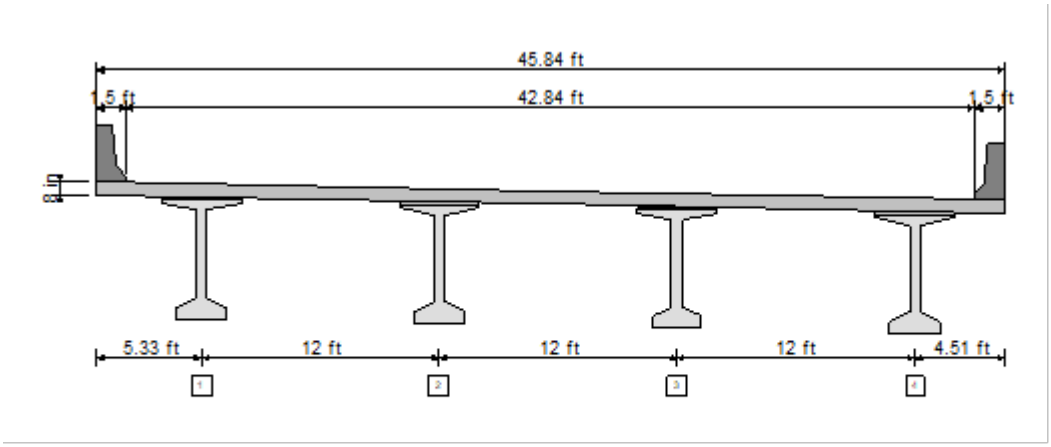

BR01 - Bridge cross section for Span 1

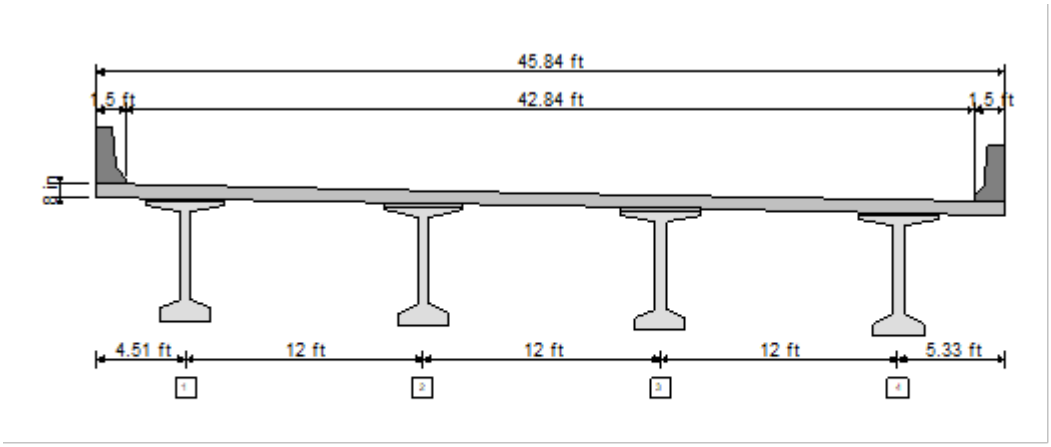

BR01 - Bridge cross section for Span 2

MATERIAL DATA - Project Level

As defined in Material Tab. For beam level properties look at Beam Specific output.

CONCRETE PROPERTIES

	Precast Release	Precast Final	C.I.P
f'c (ksi)	4.500	6.500	4.500
Wc (pcf)	150.000	150.000	150.000
Concrete Type	Normal	Normal	Normal
Lambda	1.000	1.000	1.000
Ec (ksi)	4435.310	5007.550	4435.310
K1	1.000	1.000	1.000
Thermal coeff.(1/°F)	0.00000600		

STRAND AND REBAR PROPERTIES

PRESTRESSED STEEL:

1/2-270K-LL, Low relaxation strands
Straight Pattern
Strand Diameter = 0.500 in
Tensile Strength(fpu) = 270.0 ksi
Use transformed strand and rebar: No

REINFORCING STEEL:

Tension/Shear steel: fy = 60.0 ksi Es = 29000 ksi

LOADS DATA

Loads generated using Permanent Load Wizard: YES

Left Barrier Weight, klf	0.000
Right Barrier Weight, klf	0.255
Left Curb Weight, klf	0.420
Right Curb Weight, klf	0.430
Left Sidewalk, klf	0.000
Right Sidewalk, klf	0.080
Future Wearing Surface, ksf	0.015
Sacrificial Wearing Surface, in	0.000
Stay in Place Deck Forms, klf	0.160

DEAD LOADS ON PRECAST

UNITS: (Point: kips, Location: ft, Line: klf, Trapez: klf)

Span	Beam	DC/DW	Type	Mag.1	Loc.1	Mag.2	Loc.2	Description
1	1	DC	Line	0.160	0.000	0.160	90.999	Stay-in-Place Deck Forms
1	2	DC	Line	0.160	0.000	0.160	90.999	Stay-in-Place Deck Forms
1	3	DC	Line	0.160	0.000	0.160	90.999	Stay-in-Place Deck Forms
1	4	DC	Line	0.160	0.000	0.160	90.999	Stay-in-Place Deck Forms
2	1	DC	Line	0.160	0.000	0.160	90.999	Stay-in-Place Deck Forms
2	2	DC	Line	0.160	0.000	0.160	90.999	Stay-in-Place Deck Forms
2	3	DC	Line	0.160	0.000	0.160	90.999	Stay-in-Place Deck Forms
2	4	DC	Line	0.160	0.000	0.160	90.999	Stay-in-Place Deck Forms

DIAPHRAGM LOADS - using Wizard

Span	Magnitude (plf)	Location (ft)	Skew (deg)
1	0.637	0.000	2.110
1	0.637	90.500	2.110
2	0.637	1.000	2.110
2	0.637	90.750	2.110

Span	Beam	Load (kips)	Location (ft)
1	1	0.004	0.264
1	1	0.004	90.236
1	2	0.007	0.084
1	2	0.007	90.416
1	3	0.007	0.096
1	3	0.007	90.596
1	4	0.004	0.276
1	4	0.004	90.776
2	1	0.004	0.976
2	1	0.004	90.726
2	2	0.007	0.992
2	2	0.007	90.742
2	3	0.007	1.007
2	3	0.007	90.757
2	4	0.004	1.023
2	4	0.004	90.773

DEAD LOADS ON COMPOSITE

UNITS: (Point: kips, Location: ft, Line: klf, Trapez: klf, Area: ksf, Width: ft)

Span	DC/DW	Type	Mag.1	Loc.1/Width	Mag.2	Loc.2	Description
1	DC	Line	0.420	0.000	0.420	90.999	Left Curb Weight
1	DC	Line	0.430	0.000	0.430	90.999	Right Curb Weight
1	DC	Line	0.255	0.000	0.255	90.999	Right Barrier Weight
1	DC	Line	0.080	0.000	0.080	90.999	Right Sidewalk
1	DW	Area	0.015	42.844	-	-	Future Wearing Surface
2	DC	Line	0.420	0.000	0.420	90.999	Left Curb Weight
2	DC	Line	0.430	0.000	0.430	90.999	Right Curb Weight
2	DC	Line	0.255	0.000	0.255	90.999	Right Barrier Weight
2	DC	Line	0.080	0.000	0.080	90.999	Right Sidewalk
2	DW	Area	0.015	42.844	-	-	Future Wearing Surface

TEMPERATURE LOADS - NONE

LIVE LOADS

Live load deflection: not included.

ID	Type
Design Lane	Design Lane
Design Tandem	Design Tandem
Design Truck	Design Truck
Double Truck	Double Truck

Pedestrian Load - NONE

LIVE LOADS USED

LIVE LOAD LIBRARY: USLRFDTruckLib.shlib

1 ID: Design Lane

Description:	Design Lane as in AASHTO-LRFD
Type:	Design Lane

Lane Load:	Intensity = 0.64 klf,	Width = 10.00 ft

2 ID: Design Tandem

Description:	Design Tandem as in AASHTO-LRFD
Type:	Design Tandem

First Axle Magnitude = 25.00 k,	Wheel Spacing = 6.00 ft,	Truck Width = 10.00 ft

#	Magnitude, k	Max Spacing, ft	Min Spacing, ft	Increment, ft
1	25.00	4.00	4.00	0.00

3 ID: Design Truck

Description:	Design Truck as in AASHTO-LRFD
Type:	Design Truck

First Axle Magnitude = 8.00 k,	Wheel Spacing = 6.00 ft,	Truck Width = 10.00 ft

#	Magnitude, k	Max Spacing, ft	Min Spacing, ft	Increment, ft
1	32.00	14.00	14.00	0.00
2	32.00	30.00	14.00	2.00

4 ID: Double Truck

Description:	Double Truck as in AASHTO-LRFD
Type:	Double Truck

First Axle Magnitude = 8.00 k,	Wheel Spacing = 6.00 ft,	Truck Width = 10.00 ft

#	Magnitude, k	Max Spacing, ft	Min Spacing, ft	Increment, ft
1	32.00	14.00	14.00	0.00
2	32.00	14.00	14.00	0.00
3	8.00	300.00	50.00	14.00
4	32.00	14.00	14.00	0.00
5	32.00	14.00	14.00	0.00

5 ID: Fatigue Truck

Description:	Fatigue Truck as in AASHTO-LRFD
Type:	Fatigue Truck

First Axle Magnitude = 8.00 k,	Wheel Spacing = 6.00 ft,	Truck Width = 10.00 ft

#	Magnitude, k	Max Spacing, ft	Min Spacing, ft	Increment, ft
1	32.00	14.00	14.00	0.00
2	32.00	30.00	30.00	0.00

RATING LOADS

Design Live Load Type,	Weight (tons),	Wheel Spacing(ft)
HL93 Design Load	-	-

Permit Live Load Type,	Weight (tons),	Wheel Spacing(ft)
FL120	60.00	6.00

RATING LOADS DETAILS
Design Rating Loads:

1 ID: HL93 Design Load

Description:	HL93 Design Load - Internal
Type:	Design Lane + Design Truck + Design Tandem + Double Truck

* HL93 Internal loads:

HL93 Load ID: Design Lane *

Description:	Design Lane - Internal
Type:	Design Lane

Lane Load:	Intensity = 0.64 klf,	Width = 10.00 ft

HL93 Load ID: Design Tandem *

Description:	Design Tandem - Internal
Type:	Design Tandem

First Axle Magnitude = 25.00 k,	Wheel Spacing = 6.00 ft,	Truck Width = 10.00 ft

#	Magnitude, k	Max Spacing, ft	Min Spacing, ft	Increment, ft
1	25.00	4.00	4.00	0.00

HL93 Load ID: Design Truck *

Description:	Design Truck - Internal
Type:	Design Truck

First Axle Magnitude = 8.00 k,	Wheel Spacing = 6.00 ft,	Truck Width = 10.00 ft

#	Magnitude, k	Max Spacing, ft	Min Spacing, ft	Increment, ft
1	32.00	14.00	14.00	0.00
2	32.00	30.00	14.00	2.00

HL93 Load ID: Double Truck *

Description:	Double Truck - Internal
Type:	Double Truck

First Axle Magnitude = 8.00 k,	Wheel Spacing = 6.00 ft,	Truck Width = 10.00 ft

#	Magnitude, k	Max Spacing, ft	Min Spacing, ft	Increment, ft
1	32.00	14.00	14.00	0.00
2	32.00	14.00	14.00	0.00
3	8.00	300.00	50.00	14.00
4	32.00	14.00	14.00	0.00
5	32.00	14.00	14.00	0.00

Permit Rating Loads:

1 ID: FL120

Description:	FL120 Permit Vehicle
Type:	Permit Vehicle

Uniform Load	Intensity, klf	Location, ft	Length, ft
Preceding	0.00	0.00	0.00
Trailing	0.00	0.00	0.00

First Axle Magnitude = 13.33 k,	Wheel Spacing = 6.00 ft,	Truck Width = 10.00 ft

#	Magnitude, k	Max Spacing, ft	Min Spacing, ft	Increment, ft
1	53.33	14.00	14.00	0.00
2	53.33	14.00	14.00	0.00

ANALYSIS DATA

ANALYSIS PARAMETERS DATA

Truck impact:	1.330
Lane impact:	1.000
Strength II impact:	1.330
Fatigue impact:	1.150

DISTRIBUTION FACTORS (Art. 4.6.2.2):

Include sacrificial deck thick in ts:	NO
Is Span Post-tensioned:	NO
Include Rigid Cross Section Assumption (Art. 4.6.2.2.2d):	YES
ADTT (Average Daily Truck Traffic) :	5000
Percent of the specified force effect :	1.00
Apply reduction of Moment for skew:	YES

NOTE: Beam specific dead and live load DFs are printed in beam level reports.

LOAD FACTORS: (Table 3.4.1-1 & 3.4.1-2)

	Live	DC(max)	DC(min)	DW(max)	DW(min)
Service I:	1.00	1.00	1.00	1.00	1.00
Service III:	0.80	1.00	1.00	1.00	1.00
Strength I:	1.75	1.25	0.90	1.50	0.65
Fatigue I:	1.75	-	-	-	-

Ductility Factor:	1.00
Redundancy Factor:	1.00
Importance Factor:	1.00

PROJECT DESIGN PARAMETERS

MULTIPLIERS:

Trans len mult:	Bonded	1.00
	Debonded	1.00
Dev len mult:	Bonded	1.60
	Debonded	2.00

Camber & Deflection Multiplier (PCI ref.)

	Erection	Final
Prestress:	1.80	2.20
Self. Wt:	1.85	2.40
Deck + Haunch:		2.30
Diaphragm:		3.00
DL-Prec.:		3.00
DL-Comp.:		3.00

MOMENT AND SHEAR PROVISIONS:

Ultimate Moment Capacity, Mu-prvd computed:	AASHTO equations
Horizontal Shear, Beam and Slab effects in Vu:	INCLUDED
Negative Moment Design, Non-composite Moment effects in Mu:	INCLUDED

STRESS LIMITS (Art. 5.9.2):
STRESS LIMITS AT RELEASE BEFORE LOSSES (Using Advanced Settings):

		PRECAST	
Strength		4.50	ksi
Elasticity		4435.3	ksi
Max comp		2.93	ksi
Outer	15.00 %		
Max tens		-0.19	ksi
Max tens,	w/reinf	-0.81	ksi
Center	70.00 %		
Max tens		-0.19	ksi
Max tens,	w/reinf	-0.51	ksi

STRESS LIMITS AT FINAL AFTER LOSSES:

	PRECAST		DECK	
Strength	6.50	ksi	4.50	ksi
Elasticity	5007.55	ksi	4435.31	ksi

STRESS LIMITS AT FINAL 1 (P/S + DL + LL):

	PRECAST		DECK	
Max comp	3.90	ksi	2.70	ksi

STRESS LIMITS AT FINAL 2 (P/S + DL):

	PRECAST		DECK	
Max comp	2.93	ksi	2.02	ksi

FATIGUE I STRESS LIMITS AT FINAL 3 (50% P/S + 50% DL + F_LL) (Art. 5.5.3.1):

	PRECAST		DECK	
Max comp	2.60	ksi	-	ksi

SERVICE III (Tension):

	PRECAST		DECK	
Max tens	-0.60	ksi	-0.40	ksi

RESISTANCE FACTORS (Art. 5.5.4.2):

Flexure Reinforced	
Compression controlled sections	0.75
Tension controlled sections	0.90
Flexure Prestressed	
Compression controlled sections	0.75
Tension controlled sections	1.00
Shear	0.90

PRESTRESS LOSSES:

Time Dependent Losses, Approximate Method (Art.5.9.3.3)
Days to release = 0.75
Rel. Humid.(RH) = 75.0 %

RATING PARAMETERS

Rating Factors	References	Values
Condition Factor	Table 6A.4.2.3-1	1.00
System Factor for Flexural Effect	Table 6A.4.2.4-1	1.00
System Factor for Shear Effect	Art. 6A.4.2.4	1.00
ADTT	Section C3.6.1.1.2	5000
Dynamic Load Factor for Design Level	Art. 6A.4.3.3	0.33
Dynamic Load Factor for Legal and Permit Level	Table C6A.4.4.3-1	0.33

For Flexural Effect: Condition Factor * System Factor = 1.00 >= 0.85 (Art. 6A.4.2.1) OK
For Shear Effect: Condition Factor * System Factor = 1.00 >= 0.85 (Art. 6A.4.2.1 and 6A.4.2.4) OK

Dead Load Factors (Table 6A.4.2.2-1)

Limit State	DC	DW
Strength I	1.25	1.50
Strength II	1.25	1.50
Service I	1.00	1.00
Service III	1.00	1.00

Design Live Load Factors (Table 6A.4.3.2.2-1)

Limit State	Inventory	Operating
Strength I	1.75	1.35
Service I	-	-
Service III	0.80	-

Permit Live Load Factors (Table 6A.4.5.4.2a-1)

Load	Type	Frequency	Loading Condition	Permit Factor
FL120	Routine	Unlimited	Mix with traffic	1.30

Permit Live Load Stresses Factors

Limit State	Values
Service I	1.00
Service III	-

Allowable Stresses (ksi)

Rating Level	Concrete Compression	Concrete Tension	Steel
Design Inventory	0.60 x f'c = 3.90	0.19 x sqrt(f'c) = 0.48	0.90 x f'y = 218.70
Design Operating	0.60 x f'c = 3.90	0.19 x sqrt(f'c) = 0.48	0.90 x f'y = 218.70
Legal	0.60 x f'c = 3.90	0.19 x sqrt(f'c) = 0.48	-
Permit	0.60 x f'c = 3.90	0.19 x sqrt(f'c) = 0.48	0.90 x f'y = 218.70

Consider shear reinf. across plane (FDOT alternative): Yes

BEAM REINFORCEMENT

BEAM SPECIFIC MATERIAL PROPERTIES:

Span#, Beam#	Tendon-ID	Girder-f'ci ksi	Girder-f'c ksi	Deck-f'c ksi
Span:1, Beam:1	1/2-270K-LL	4.50	6.50	4.50
Span:1, Beam:2	1/2-270K-LL	4.50	6.50	4.50
Span:1, Beam:3	1/2-270K-LL	4.50	6.50	4.50
Span:1, Beam:4	1/2-270K-LL	4.50	6.50	4.50
Span:2, Beam:1	1/2-270K-LL	4.50	6.50	4.50
Span:2, Beam:2	1/2-270K-LL	4.50	6.50	4.50
Span:2, Beam:3	1/2-270K-LL	4.50	6.50	4.50
Span:2, Beam:4	1/2-270K-LL	4.50	6.50	4.50

Span:1, Beam:1

PRESTRESSED STEEL:

36 strands, 1/2-270K-LL, Low relaxation strands
Straight Pattern

END PATTERN (Ycg = 4.89 in):

13 @ 3.000 in	13 @ 5.000 in	9 @ 7.000 in	1 @ 9.000 in

REINFORCING STEEL:

Tension	steel:	
fy	60.0	ksi
Es	29000	ksi

Stirrups:

# legs	Size	fy (ksi)	Area (in2)	Spacing (in)	Start (ft)	End (ft)	Extends into Deck
2	US#4[M13]	60.0	0.40	3.00	0.2083	1.7083	Yes
2	US#4[M13]	60.0	0.40	6.00	1.7083	5.7083	Yes
1	US#4[M13]	60.0	0.20	4.00	5.7083	15.0417	Yes
1	US#4[M13]	60.0	0.20	6.00	15.0417	20.0417	Yes
1	US#4[M13]	60.0	0.20	10.00	20.0417	71.9583	Yes
1	US#4[M13]	60.0	0.20	6.00	71.9583	76.9583	Yes
1	US#4[M13]	60.0	0.20	4.00	76.9583	86.2917	Yes
2	US#4[M13]	60.0	0.40	6.00	86.2917	90.2917	Yes
2	US#4[M13]	60.0	0.40	3.00	90.2917	91.7917	Yes

Span:1, Beam:2

PRESTRESSED STEEL:
36 strands, 1/2-270K-LL, Low relaxation strands
Straight Pattern

END PATTERN (Ycg = 4.89 in):

13 @ 3.000 in	13 @ 5.000 in	9 @ 7.000 in	1 @ 9.000 in

REINFORCING STEEL:

Tension	steel:	
fy	60.0	ksi
Es	29000	ksi

Stirrups:

# legs	Size	fy (ksi)	Area (in2)	Spacing (in)	Start (ft)	End (ft)	Extends into Deck
2	US#4[M13]	60.0	0.40	3.00	0.2083	1.7083	Yes
2	US#4[M13]	60.0	0.40	6.00	1.7083	5.7083	Yes
1	US#4[M13]	60.0	0.20	4.00	5.7083	15.0417	Yes
1	US#4[M13]	60.0	0.20	6.00	15.0417	20.0417	Yes
1	US#4[M13]	60.0	0.20	10.00	20.0417	71.9583	Yes
1	US#4[M13]	60.0	0.20	6.00	71.9583	76.9583	Yes
1	US#4[M13]	60.0	0.20	4.00	76.9583	86.2917	Yes
2	US#4[M13]	60.0	0.40	6.00	86.2917	90.2917	Yes
2	US#4[M13]	60.0	0.40	3.00	90.2917	91.7917	Yes

Span:1, Beam:3

PRESTRESSED STEEL:
36 strands, 1/2-270K-LL, Low relaxation strands
Straight Pattern

END PATTERN (Ycg = 4.89 in):

13 @ 3.000 in	13 @ 5.000 in	9 @ 7.000 in	1 @ 9.000 in

REINFORCING STEEL:

Tension	steel:	
fy	60.0	ksi
Es	29000	ksi

Stirrups:

# legs	Size	fy (ksi)	Area (in2)	Spacing (in)	Start (ft)	End (ft)	Extends into Deck
2	US#4[M13]	60.0	0.40	3.00	0.2083	1.7083	Yes
2	US#4[M13]	60.0	0.40	6.00	1.7083	5.7083	Yes
1	US#4[M13]	60.0	0.20	4.00	5.7083	15.0417	Yes
1	US#4[M13]	60.0	0.20	6.00	15.0417	20.0417	Yes
1	US#4[M13]	60.0	0.20	10.00	20.0417	71.9583	Yes
1	US#4[M13]	60.0	0.20	6.00	71.9583	76.9583	Yes
1	US#4[M13]	60.0	0.20	4.00	76.9583	86.2917	Yes
2	US#4[M13]	60.0	0.40	6.00	86.2917	90.2917	Yes
2	US#4[M13]	60.0	0.40	3.00	90.2917	91.7917	Yes

Span:1, Beam:4

PRESTRESSED STEEL:
36 strands, 1/2-270K-LL, Low relaxation strands
Straight Pattern

END PATTERN (Ycg = 4.89 in):

13 @ 3.000 in	13 @ 5.000 in	9 @ 7.000 in	1 @ 9.000 in

REINFORCING STEEL:

Tension	steel:	
fy	60.0	ksi
Es	29000	ksi

Stirrups:

# legs	Size	fy (ksi)	Area (in2)	Spacing (in)	Start (ft)	End (ft)	Extends into Deck
2	US#4[M13]	60.0	0.40	3.00	0.2083	1.7083	Yes
2	US#4[M13]	60.0	0.40	6.00	1.7083	5.7083	Yes
1	US#4[M13]	60.0	0.20	4.00	5.7083	15.0417	Yes
1	US#4[M13]	60.0	0.20	6.00	15.0417	20.0417	Yes
1	US#4[M13]	60.0	0.20	10.00	20.0417	71.9583	Yes
1	US#4[M13]	60.0	0.20	6.00	71.9583	76.9583	Yes
1	US#4[M13]	60.0	0.20	4.00	76.9583	86.2917	Yes
2	US#4[M13]	60.0	0.40	6.00	86.2917	90.2917	Yes
2	US#4[M13]	60.0	0.40	3.00	90.2917	91.7917	Yes

Span:2, Beam:1

PRESTRESSED STEEL:
36 strands, 1/2-270K-LL, Low relaxation strands
Straight Pattern

END PATTERN (Ycg = 4.89 in):

13 @ 3.000 in	13 @ 5.000 in	9 @ 7.000 in	1 @ 9.000 in

REINFORCING STEEL:

Tension	steel:	
fy	60.0	ksi
Es	29000	ksi

Stirrups:

# legs	Size	fy (ksi)	Area (in2)	Spacing (in)	Start (ft)	End (ft)	Extends into Deck
2	US#4[M13]	60.0	0.40	3.00	0.2083	1.7083	Yes
2	US#4[M13]	60.0	0.40	6.00	1.7083	5.7083	Yes
1	US#4[M13]	60.0	0.20	4.00	5.7083	15.0417	Yes
1	US#4[M13]	60.0	0.20	6.00	15.0417	20.0417	Yes
1	US#4[M13]	60.0	0.20	10.00	20.0417	71.9583	Yes
1	US#4[M13]	60.0	0.20	6.00	71.9583	76.9583	Yes
1	US#4[M13]	60.0	0.20	4.00	76.9583	86.2917	Yes
2	US#4[M13]	60.0	0.40	6.00	86.2917	90.2917	Yes
2	US#4[M13]	60.0	0.40	3.00	90.2917	91.7917	Yes

Span:2, Beam:2

PRESTRESSED STEEL:
36 strands, 1/2-270K-LL, Low relaxation strands
Straight Pattern

END PATTERN (Ycg = 4.89 in):

13 @ 3.000 in	13 @ 5.000 in	9 @ 7.000 in	1 @ 9.000 in

REINFORCING STEEL:

Tension	steel:	
fy	60.0	ksi
Es	29000	ksi

Stirrups:

# legs	Size	fy (ksi)	Area (in2)	Spacing (in)	Start (ft)	End (ft)	Extends into Deck
2	US#4[M13]	60.0	0.40	3.00	0.2083	1.7083	Yes
2	US#4[M13]	60.0	0.40	6.00	1.7083	5.7083	Yes
1	US#4[M13]	60.0	0.20	4.00	5.7083	15.0417	Yes
1	US#4[M13]	60.0	0.20	6.00	15.0417	20.0417	Yes
1	US#4[M13]	60.0	0.20	10.00	20.0417	71.9583	Yes
1	US#4[M13]	60.0	0.20	6.00	71.9583	76.9583	Yes
1	US#4[M13]	60.0	0.20	4.00	76.9583	86.2917	Yes
2	US#4[M13]	60.0	0.40	6.00	86.2917	90.2917	Yes
2	US#4[M13]	60.0	0.40	3.00	90.2917	91.7917	Yes

Span:2, Beam:3

PRESTRESSED STEEL:
36 strands, 1/2-270K-LL, Low relaxation strands
Straight Pattern

END PATTERN (Ycg = 4.89 in):

13 @ 3.000 in	13 @ 5.000 in	9 @ 7.000 in	1 @ 9.000 in

REINFORCING STEEL:

Tension	steel:	
fy	60.0	ksi
Es	29000	ksi

Stirrups:

# legs	Size	fy (ksi)	Area (in2)	Spacing (in)	Start (ft)	End (ft)	Extends into Deck
2	US#4[M13]	60.0	0.40	3.00	0.2083	1.7083	Yes
2	US#4[M13]	60.0	0.40	6.00	1.7083	5.7083	Yes
1	US#4[M13]	60.0	0.20	4.00	5.7083	15.0417	Yes
1	US#4[M13]	60.0	0.20	6.00	15.0417	20.0417	Yes
1	US#4[M13]	60.0	0.20	10.00	20.0417	71.9583	Yes
1	US#4[M13]	60.0	0.20	6.00	71.9583	76.9583	Yes
1	US#4[M13]	60.0	0.20	4.00	76.9583	86.2917	Yes
2	US#4[M13]	60.0	0.40	6.00	86.2917	90.2917	Yes
2	US#4[M13]	60.0	0.40	3.00	90.2917	91.7917	Yes

Span:2, Beam:4

PRESTRESSED STEEL:
36 strands, 1/2-270K-LL, Low relaxation strands
Straight Pattern

END PATTERN (Ycg = 4.89 in):

13 @ 3.000 in	13 @ 5.000 in	9 @ 7.000 in	1 @ 9.000 in

REINFORCING STEEL:

Tension	steel:	
fy	60.0	ksi
Es	29000	ksi

Stirrups:

# legs	Size	fy (ksi)	Area (in2)	Spacing (in)	Start (ft)	End (ft)	Extends into Deck
2	US#4[M13]	60.0	0.40	3.00	0.2083	1.7083	Yes
2	US#4[M13]	60.0	0.40	6.00	1.7083	5.7083	Yes
1	US#4[M13]	60.0	0.20	4.00	5.7083	15.0417	Yes
1	US#4[M13]	60.0	0.20	6.00	15.0417	20.0417	Yes
1	US#4[M13]	60.0	0.20	10.00	20.0417	71.9583	Yes
1	US#4[M13]	60.0	0.20	6.00	71.9583	76.9583	Yes
1	US#4[M13]	60.0	0.20	4.00	76.9583	86.2917	Yes
2	US#4[M13]	60.0	0.40	6.00	86.2917	90.2917	Yes
2	US#4[M13]	60.0	0.40	3.00	90.2917	91.7917	Yes

b. LEAP Concrete Bridge Output – Span 1 and 2

CONSOLIDATED FDOT RATING REPORT

Load Rating Summary for Prestressed Concrete Bridges

All Bridge

Design Load Rating - Summary

Limit State	Vehicle	Weight (tons)	LF LL	LF DC	LF DW	Moment DF	Mom or Str RF	Mom or Str Tons	Mom or Str Location	Mom or Str Dim	Controlling Span/Beam	Shear DF	Shear RF	Shear Tons	Shear Location	Shear Dim	Controlling Span/Beam
Strength I (Inv)	HL93 Design Load	-	1.75	1.25	1.50	1.15	1.49	-	0.6L	54.70	2/4	1.11	1.43	-	Critical	84.62	1/2
Strength I (Op)	HL93 Design Load	-	1.35	1.25	1.50	1.15	1.93	-	0.6L	54.70	2/4	1.11	1.86	-	Critical	84.62	1/2
Service III (Inv)	HL93 Design Load	-	0.80	1.00	1.00	1.15	1.74	-	0.5L	45.50	2/4	-	-	-	-	-	-
Service III (Op)	HL93 Design Load	-	0.80	1.00	1.00	1.15	1.74	-	0.5L	45.50	2/4	-	-	-	-	-	-

Bentley			Sheet #	2
			Job #	
Program:	LEAP® Bridge Concrete CONNECT Edition	BASE Consultants	Designed	KV
Module:	Precast/Prestressed Girder	Copyright © Bentley Systems, Inc. 2021	Date	Jan/7/2021
Version:	21.00.00.24	www.bentley.com Phone: 1-800-778-4277	Checked	RK
File Name:	**Span-1-2EB(5ft).lbcx**		Date	Jan/7/2021

Design Load Rating

Span	Beam	Limit State	Vehicle	Weight (tons)	LF LL	LF DC	LF DW	Moment DF	Mom or Str RF	Mom or Str Tons	Mom or Str Location	Mom or Str Dim	Shear DF	Shear RF	Shear Tons	Shear Location	Shear Dim
1	1	Strength I (Inv)	HL93 Design Load	-	1.75	1.25	1.50	1.15	1.49	-	0.4L	36.30	1.09	1.46	-	Critical	84.64
1	1	Strength I (Op)	HL93 Design Load	-	1.35	1.25	1.50	1.15	1.93	-	0.4L	36.30	1.09	1.89	-	Critical	84.64
1	1	Service III (Inv)	HL93 Design Load	-	0.80	1.00	1.00	1.15	1.74	-	0.5L	45.50	-	-	-	-	-
1	1	Service III (Op)	HL93 Design Load	-	0.80	1.00	1.00	1.15	1.74	-	0.5L	45.50	-	-	-	-	-
1	2	Strength I (Inv)	HL93 Design Load	-	1.75	1.25	1.50	0.97	1.75	-	0.4L	36.30	1.11	1.43	-	Critical	84.62
1	2	Strength I (Op)	HL93 Design Load	-	1.35	1.25	1.50	0.97	2.27	-	0.4L	36.30	1.11	1.86	-	Critical	84.62
1	2	Service III (Inv)	HL93 Design Load	-	0.80	1.00	1.00	0.97	2.00	-	0.5L	45.50	-	-	-	-	-
1	2	Service III (Op)	HL93 Design Load	-	0.80	1.00	1.00	0.97	2.00	-	0.5L	45.50	-	-	-	-	-
1	3	Strength I (Inv)	HL93 Design Load	-	1.75	1.25	1.50	0.97	1.75	-	0.4L	36.30	1.11	1.43	-	Critical	84.62
1	3	Strength I (Op)	HL93 Design Load	-	1.35	1.25	1.50	0.97	2.27	-	0.4L	36.30	1.11	1.86	-	Critical	84.62
1	3	Service III (Inv)	HL93 Design Load	-	0.80	1.00	1.00	0.97	2.00	-	0.5L	45.50	-	-	-	-	-

Bentley			Sheet #	3
			Job #	
Program:	LEAP® Bridge Concrete CONNECT Edition	BASE Consultants	Designed	KV
Module:	Precast/Prestressed Girder	Copyright © Bentley Systems, Inc. 2021	Date	Jan/7/2021
Version:	21.00.00.24	www.bentley.com Phone: 1-800-778-4277	Checked	RK
File Name:	**Span-1-2EB(5ft).lbcx**		Date	Jan/7/2021

Span	Beam	Limit State	Vehicle	Weight (tons)	LF LL	LF DC	LF DW	Moment DF	Mom or Str RF	Mom or Str Tons	Mom or Str Location	Mom or Str Dim	Shear DF	Shear RF	Shear Tons	Shear Location	Shear Dim
1	3	Service III (Op)	HL93 Design Load	-	0.80	1.00	1.00	0.97	2.00	-	0.5L	45.50	-	-	-	-	-
1	4	Strength I (Inv)	HL93 Design Load	-	1.75	1.25	1.50	1.06	1.63	-	0.4L	36.30	1.01	1.60	-	Critical	84.64
1	4	Strength I (Op)	HL93 Design Load	-	1.35	1.25	1.50	1.06	2.11	-	0.4L	36.30	1.01	2.08	-	Critical	84.64
1	4	Service III (Inv)	HL93 Design Load	-	0.80	1.00	1.00	1.06	1.93	-	0.5L	45.50	-	-	-	-	-
1	4	Service III (Op)	HL93 Design Load	-	0.80	1.00	1.00	1.06	1.93	-	0.5L	45.50	-	-	-	-	-
2	1	Strength I (Inv)	HL93 Design Load	-	1.75	1.25	1.50	1.06	1.63	-	0.6L	54.70	1.01	1.62	-	Critical	6.43
2	1	Strength I (Op)	HL93 Design Load	-	1.35	1.25	1.50	1.06	2.12	-	0.6L	54.70	1.01	2.09	-	Critical	6.43
2	1	Service III (Inv)	HL93 Design Load	-	0.80	1.00	1.00	1.06	1.93	-	0.5L	45.50	-	-	-	-	-
2	1	Service III (Op)	HL93 Design Load	-	0.80	1.00	1.00	1.06	1.93	-	0.5L	45.50	-	-	-	-	-
2	2	Strength I (Inv)	HL93 Design Load	-	1.75	1.25	1.50	0.97	1.75	-	0.6L	54.70	1.10	1.44	-	Critical	6.44
2	2	Strength I (Op)	HL93 Design Load	-	1.35	1.25	1.50	0.97	2.27	-	0.6L	54.70	1.10	1.87	-	Critical	6.44
		Service III	HL93														

Span	Beam	Limit State	Vehicle	Weight (tons)	LF LL	LF DC	LF DW	Moment DF	Mom or Str RF	Mom or Str Tons	Mom or Str Location	Mom or Str Dim	Shear DF	Shear RF	Shear Tons	Shear Location	Shear Dim
2	2	(Inv)	Design Load	-	0.80	1.00	1.00	0.97	2.00	-	0.5L	45.50	-	-	-	-	-
2	2	Service III (Op)	HL93 Design Load	-	0.80	1.00	1.00	0.97	2.00	-	0.5L	45.50	-	-	-	-	-
2	3	Strength I (Inv)	HL93 Design Load	-	1.75	1.25	1.50	0.97	1.75	-	0.6L	54.70	1.10	1.44	-	Critical	6.44
2	3	Strength I (Op)	HL93 Design Load	-	1.35	1.25	1.50	0.97	2.27	-	0.6L	54.70	1.10	1.87	-	Critical	6.44
2	3	Service III (Inv)	HL93 Design Load	-	0.80	1.00	1.00	0.97	2.00	-	0.5L	45.50	-	-	-	-	-
2	3	Service III (Op)	HL93 Design Load	-	0.80	1.00	1.00	0.97	2.00	-	0.5L	45.50	-	-	-	-	-
2	4	Strength I (Inv)	HL93 Design Load	-	1.75	1.25	1.50	1.15	1.49	-	0.6L	54.70	1.09	1.47	-	Critical	6.43
2	4	Strength I (Op)	HL93 Design Load	-	1.35	1.25	1.50	1.15	1.93	-	0.6L	54.70	1.09	1.90	-	Critical	6.43
2	4	Service III (Inv)	HL93 Design Load	-	0.80	1.00	1.00	1.15	1.74	-	0.5L	45.50	-	-	-	-	-
2	4	Service III (Op)	HL93 Design Load	-	0.80	1.00	1.00	1.15	1.74	-	0.5L	45.50	-	-	-	-	-

Bentley				Sheet #	5
				Job #	
Program:	LEAP® Bridge Concrete CONNECT Edition	BASE Consultants		Designed	KV
Module:	Precast/Prestressed Girder	Copyright © Bentley Systems, Inc. 2021		Date	Jan/7/2021
Version:	21.00.00.24	www.bentley.com	Phone: 1-800-778-4277	Checked	RK
File Name:	**Span-1-2EB(5ft).lbcx**			Date	Jan/7/2021

Permit Load Rating - Summary

Limit State	Vehicle	Weight (tons)	LF LL	LF DC	LF DW	Moment DF	Mom or Str RF	Mom or Str Tons	Mom or Str Location	Mom or Str Dim	Controlling Span/Beam	Shear DF	Shear RF	Shear Tons	Shear Location	Shear Dim	Controlli Span/Bea
Strength II	FL120	60.00	1.30	1.25	1.50	1.15	1.62	97.44	0.6L	54.70	2/4	1.09	1.51	90.36	0.7L	63.90	2/4
Service I	FL120	60.00	1.00	1.00	1.00	1.15	1.93	115.84	0.5L	45.50	2/4	-	-	-	-	-	-

Bentley			Sheet #	6
			Job #	
Program:	LEAP® Bridge Concrete CONNECT Edition	BASE Consultants	Designed	KV
Module:	Precast/Prestressed Girder	Copyright © Bentley Systems, Inc. 2021	Date	Jan/7/2021
Version:	21.00.00.24	www.bentley.com Phone: 1-800-778-4277	Checked	RK
File Name:	**Span-1-2EB(5ft).lbcx**		Date	Jan/7/2021

Permit Load Rating

Span	Beam	Limit State	Vehicle	Weight (tons)	LF LL	LF DC	LF DW	Moment DF	Mom or Str RF	Mom or Str Tons	Mom or Str Location	Mom or Str Dim	Shear DF	Shear RF	Shear Tons	Shear Location	Shear Dim
1	1	Strength II	FL120	60.00	1.30	1.25	1.50	1.15	1.62	97.46	0.4L	36.30	1.09	1.60	95.80	0.3L	27.10
1	1	Service I	FL120	60.00	1.00	1.00	1.00	1.15	1.93	115.87	0.5L	45.50	-	-	-	-	-
1	2	Strength II	FL120	60.00	1.30	1.25	1.50	0.97	1.91	114.39	0.4L	36.30	1.11	1.71	102.40	0.7L	63.90
1	2	Service I	FL120	60.00	1.00	1.00	1.00	0.97	2.13	128.04	0.5L	45.50	-	-	-	-	-
1	3	Strength II	FL120	60.00	1.30	1.25	1.50	0.97	1.91	114.39	0.4L	36.30	1.11	1.71	102.40	0.7L	63.90
1	3	Service I	FL120	60.00	1.00	1.00	1.00	0.97	2.13	128.04	0.5L	45.50	-	-	-	-	-
1	4	Strength II	FL120	60.00	1.30	1.25	1.50	1.06	1.78	106.74	0.4L	36.30	1.01	1.90	114.00	0.7L	63.90
1	4	Service I	FL120	60.00	1.00	1.00	1.00	1.06	2.10	125.75	0.5L	45.50	-	-	-	-	-
2	1	Strength II	FL120	60.00	1.30	1.25	1.50	1.06	1.78	106.77	0.6L	54.70	1.01	1.82	109.33	0.3L	27.10
2	1	Service I	FL120	60.00	1.00	1.00	1.00	1.06	2.10	125.79	0.5L	45.50	-	-	-	-	-
2	2	Strength II	FL120	60.00	1.30	1.25	1.50	0.97	1.91	114.39	0.6L	54.70	1.10	1.64	98.12	0.3L	27.10
2	2	Service I	FL120	60.00	1.00	1.00	1.00	0.97	2.13	128.04	0.5L	45.50	-	-	-	-	-
2	3	Strength II	FL120	60.00	1.30	1.25	1.50	0.97	1.91	114.39	0.6L	54.70	1.10	1.64	98.12	0.3L	27.10
2	3	Service I	FL120	60.00	1.00	1.00	1.00	0.97	2.13	128.04	0.5L	45.50	-	-	-	-	-
2	4	Strength II	FL120	60.00	1.30	1.25	1.50	1.15	1.62	97.44	0.6L	54.70	1.09	1.51	90.36	0.7L	63.90
2	4	Service I	FL120	60.00	1.00	1.00	1.00	1.15	1.93	115.84	0.5L	45.50	-	-	-	-	-

c. LEAP Steel Bridge Input – Span 3

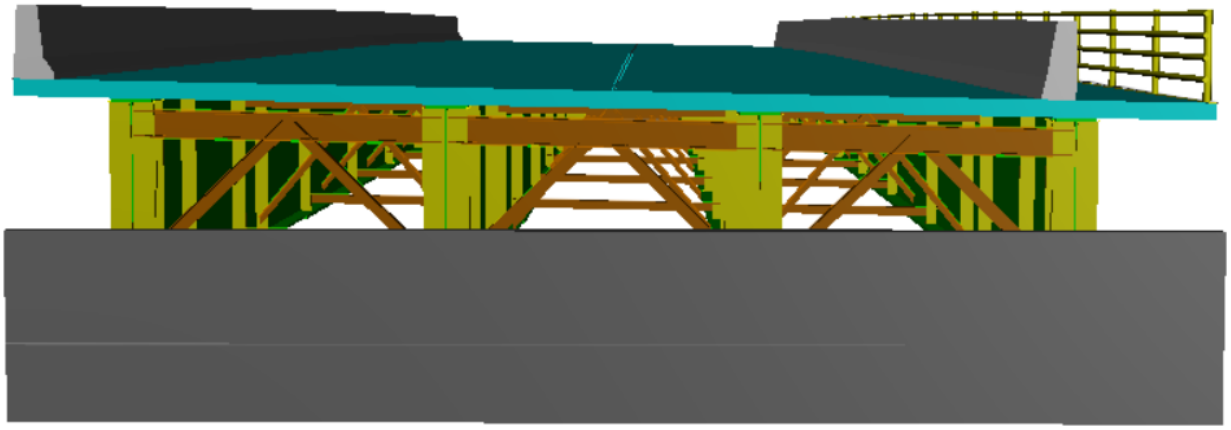

Bridge 1

Roadway Elements

Alignments

Alignment Name: ALG01
Begin Station: 35+85.0000
Coordinate Tie:
Northing: 0.0000
Easting: 0.0000

Segment	Shape	Start Direction	Radius (ft)	End Station	Spiral In (ft)	Spiral Out (ft)	Sense
1	Tangent	N 0 00 00.00 W		37+95.0000			

Profiles

Profile Name: PROF01

VPI	Station	Elevation	Transition	LVC-1 (ft)	LVC-2 (ft)
1	33+50.0000	76.6670			
2	37+00.0000	79.0000	Parabola	150.0000	150.0000
3	42+00.0000	75.2500			

Cross Sections

Cross Section Name: XSECT01

Template Name: TMPL 0
Template Station: 0+00.0000
PG Offset: 0.0000
PG Node: 2

Plane	Width Type	Width (ft)	Vertical Type	Vertical %
1	Distance	22.9200	Slope	-2.0000
2	Distance	22.9200	Slope	-2.0000

Roadways

No.	Name	Align	Profile	Cross Section	Min. Station	Max. Station
1	RDWY01	ALG01	PROF01	XSECT01	35+85.0000	37+95.0000

Superstructure

Pier/Abutment Locations

Roadway: RDWY01

Offset to Bridge CL: 0.0000 ft

No.	Type	Name	Input Method	Station/Distance(ft)	Skew/Bearing
1	Abutment	Support 01	Station	35+85.0000	NORMAL
2	Abutment	Support 02	Station	37+95.0000	NORMAL

Deck Slab

Deck Thickness: 8.0000 in

Haunch Thickness: 3.0000 in

Sacrificial Wearing Surface: 0.0000 in

No.	Name	Material	Ref. Back	Ref. Method	Offset/Station	Ref. Ahead	Ref. Method	Offset/Station
1	Slab 01	NONE	Support 01	Along Alignment	0.000000	Support 02	Along Alignment	0.000000

Member Groups

Member Group Name: Group01

Back Reference: Support 01

Ahead Reference: Support 02

Number of Members: 4

Path: Concentric to align.

Back Location

Left Fascia Member

Reference: Left edge of slab

Direction: Along support

Offset(ft): 5.3300

Interior Members

Spacing Type: Equally spaced

Spacing(ft): 12.0000

Right Fascia Member

Reference: Right edge of slab

Direction: Along support

Offset(ft): 4.5100

Ahead Location

Left Fascia Member

Reference: Left edge of slab

Direction: Along support

Offset(ft): 0.0000

Interior Members

Spacing Type: Equally spaced

Spacing(ft): 12.0000

Right Fascia Member

Reference: Right edge of slab

Direction: Along support

Offset(ft): 0.0000

Member Definition

Member Group: Group01

Member 01:

WEB	No.	Ref. Span	Start (ft)	Length (ft)	Material	Thick (in)	Start Height (in)	Variation	End Height (in)
	1	1	0.0000	42.0000	Grade 50W	0.6250	93.0000	None	93.0000
	2	1	42.0000	126.0000	Grade 50W	0.6250	93.0000	None	93.0000
	3	1	168.0000	42.0000	Grade 50W	0.6250	93.0000	None	93.0000
Top Flange	**No.**	**Ref. Span**	**Start (ft)**	**Length (ft)**	**Material**	**Thick (in)**	**Start Width (in)**	**Variation**	**End Width (in)**
	1	1	0.0000	42.0000	Grade 50W	0.8750	18.5000	None	18.5000
	2	1	42.0000	126.0000	Grade 50W	1.4375	20.5000	None	20.5000
	3	1	168.0000	42.0000	Grade 50W	0.8750	18.5000	None	18.5000
Bottom Flange	**No.**	**Ref. Span**	**Start (ft)**	**Length (ft)**	**Material**	**Thick (in)**	**Start Width (in)**	**Variation**	**End Width (in)**

Date:	8/2/2021	Span3-5ft-EB.lbsx	
Time:	2:36 PM	Bentley LEAP Bridge Steel [AASHTO LRFD 8th Ed. with 2017 Interims]	v21.00.00.28

Bottom Flange	No.	Ref. Span	Start (ft)	Length (ft)	Material	Thick (in)	Start Width (in)	Variation	End Width (in)
	1	1	0.0000	26.0000	Grade 50W	0.7500	20.0000	None	20.0000
	2	1	26.0000	16.0000	Grade 50W	1.3750	20.0000	None	20.0000
	3	1	42.0000	126.0000	Grade 50W	2.2500	22.0000	None	22.0000
	4	1	168.0000	16.0000	Grade 50W	1.3750	20.0000	None	20.0000
	5	1	184.0000	26.0000	Grade 50W	0.7500	20.0000	None	20.0000

Member 02:

WEB	No.	Ref. Span	Start (ft)	Length (ft)	Material	Thick (in)	Start Height (in)	Variation	End Height (in)
	1	1	0.0000	42.0000	Grade 50W	0.6250	93.0000	None	93.0000
	2	1	42.0000	126.0000	Grade 50W	0.6250	93.0000	None	93.0000
	3	1	168.0000	42.0000	Grade 50W	0.6250	93.0000	None	93.0000
Top Flange	**No.**	**Ref. Span**	**Start (ft)**	**Length (ft)**	**Material**	**Thick (in)**	**Start Width (in)**	**Variation**	**End Width (in)**
	1	1	0.0000	42.0000	Grade 50W	0.8750	18.5000	None	18.5000
	2	1	42.0000	126.0000	Grade 50W	1.4375	20.5000	None	20.5000
	3	1	168.0000	42.0000	Grade 50W	0.8750	18.5000	None	18.5000
Bottom Flange	**No.**	**Ref. Span**	**Start (ft)**	**Length (ft)**	**Material**	**Thick (in)**	**Start Width (in)**	**Variation**	**End Width (in)**
	1	1	0.0000	26.0000	Grade 50W	0.7500	20.0000	None	20.0000
	2	1	26.0000	16.0000	Grade 50W	1.3750	20.0000	None	20.0000
	3	1	42.0000	126.0000	Grade 50W	2.2500	22.0000	None	22.0000

Bottom Flange	No.	Ref. Span	Start (ft)	Length (ft)	Material	Thick (in)	Start Width (in)	Variation	End Width (in)
	4	1	168.0000	16.0000	Grade 50W	1.3750	20.0000	None	20.0000
	5	1	184.0000	26.0000	Grade 50W	0.7500	20.0000	None	20.0000

Member 03:

WEB	No.	Ref. Span	Start (ft)	Length (ft)	Material	Thick (in)	Start Height (in)	Variation	End Height (in)
	1	1	0.0000	42.0000	Grade 50W	0.6250	93.0000	None	93.0000
	2	1	42.0000	126.0000	Grade 50W	0.6250	93.0000	None	93.0000
	3	1	168.0000	42.0000	Grade 50W	0.6250	93.0000	None	93.0000
Top Flange	**No.**	**Ref. Span**	**Start (ft)**	**Length (ft)**	**Material**	**Thick (in)**	**Start Width (in)**	**Variation**	**End Width (in)**
	1	1	0.0000	42.0000	Grade 50W	0.8750	18.5000	None	18.5000
	2	1	42.0000	126.0000	Grade 50W	1.4375	20.5000	None	20.5000
	3	1	168.0000	42.0000	Grade 50W	0.8750	18.5000	None	18.5000
Bottom Flange	**No.**	**Ref. Span**	**Start (ft)**	**Length (ft)**	**Material**	**Thick (in)**	**Start Width (in)**	**Variation**	**End Width (in)**
	1	1	0.0000	26.0000	Grade 50W	0.7500	20.0000	None	20.0000
	2	1	26.0000	16.0000	Grade 50W	1.3750	20.0000	None	20.0000
	3	1	42.0000	126.0000	Grade 50W	2.2500	22.0000	None	22.0000
	4	1	168.0000	16.0000	Grade 50W	1.3750	20.0000	None	20.0000
	5	1	184.0000	26.0000	Grade 50W	0.7500	20.0000	None	20.0000

Member 04:

WEB	No.	Ref. Span	Start (ft)	Length (ft)	Material	Thick (in)	Start Height (in)	Variation	End Height (in)
	1	1	0.0000	42.0000	Grade 50W	0.6250	93.0000	None	93.0000
	2	1	42.0000	126.0000	Grade 50W	0.6250	93.0000	None	93.0000
	3	1	168.0000	42.0000	Grade 50W	0.6250	93.0000	None	93.0000
Top Flange	**No.**	**Ref. Span**	**Start (ft)**	**Length (ft)**	**Material**	**Thick (in)**	**Start Width (in)**	**Variation**	**End Width (in)**
	1	1	0.0000	42.0000	Grade 50W	0.8750	18.5000	None	18.5000
	2	1	42.0000	126.0000	Grade 50W	1.4375	20.5000	None	20.5000
	3	1	168.0000	42.0000	Grade 50W	0.8750	18.5000	None	18.5000
Bottom Flange	**No.**	**Ref. Span**	**Start (ft)**	**Length (ft)**	**Material**	**Thick (in)**	**Start Width (in)**	**Variation**	**End Width (in)**
	1	1	0.0000	26.0000	Grade 50W	0.7500	20.0000	None	20.0000
	2	1	26.0000	16.0000	Grade 50W	1.3750	20.0000	None	20.0000
	3	1	42.0000	126.0000	Grade 50W	2.2500	22.0000	None	22.0000
	4	1	168.0000	16.0000	Grade 50W	1.3750	20.0000	None	20.0000
	5	1	184.0000	26.0000	Grade 50W	0.7500	20.0000	None	20.0000

Cross-frame/Diaphragm Definition

Frame Name: END DIA

Frame Type: Frame Inverted V

Top Strut

Enabled:	Yes
Top Left Distance (in):	10.000000
Top Right Distance (in):	10.000000
Begin Offset (in):	1.500000
End Offset (in):	1.500000
Section:	MC12X45
Double Section:	No
Gap Between Sections (in):	0
Material:	Grade 50
Center Line Reference:	Middle
Vertical Orientation:	Channel back vertical
Horizontal Orientation:	N/A

Bottom Strut

Enabled:	Yes
Bottom Left Distance (in):	8.000000
Bottom Right Distance (in):	8.000000
Begin Offset (in):	1.500000
End Offset (in):	1.500000
Section:	L8X8X1/2
Double Section:	No
Gap Between Sections (in):	0
Material:	Grade 50
Center Line Reference:	Middle
Vertical Orientation:	Long leg vertical
Horizontal Orientation:	N/A

Left Diagonal

Bottom Left Distance (in):	15.000000
Top Right Distance (in):	10.000000
Begin Offset (in):	3.000000
End Offset (in):	3.000000
Section:	L8X8X1/2
Double Section:	No
Gap Between Sections (in):	0
Material:	Grade 50
Center Line Reference:	Middle
Vertical Orientation:	Long leg vertical
Horizontal Orientation:	N/A

Right Diagonal

Top Left Distance (in):	10.000000
Bottom Right Distance (in):	15.000000
Begin Offset (in):	3.000000
End Offset (in):	3.000000
Section:	L8X8X1/2
Double Section:	No
Gap Between Sections (in):	0
Material:	Grade 50
Center Line Reference:	Middle
Vertical Orientation:	Long leg vertical
Horizontal Orientation:	N/A

Frame Name: CROSS FRAME

Frame Type: Frame Inverted V

Top Strut

Enabled:	Yes
Top Left Distance (in):	10.000000
Top Right Distance (in):	10.000000
Begin Offset (in):	1.500000
End Offset (in):	1.500000
Section:	L6X6X3/8
Double Section:	No
Gap Between Sections (in):	0
Material:	Grade 50
Center Line Reference:	Middle
Vertical Orientation:	Long leg vertical
Horizontal Orientation:	N/A

Bottom Strut

Enabled:	Yes
Bottom Left Distance (in):	8.000000
Bottom Right Distance (in):	8.000000
Begin Offset (in):	1.500000
End Offset (in):	1.500000
Section:	L6X6X3/8
Double Section:	No
Gap Between Sections (in):	0
Material:	Grade 50
Center Line Reference:	Middle
Vertical Orientation:	Long leg vertical
Horizontal Orientation:	N/A

Left Diagonal

Bottom Left Distance (in): -3.000000

Top Right Distance (in): 0.000000

Begin Offset (in): 16.000000

End Offset (in): 0.000000

Section: L6X6X3/8

Double Section: No

Gap Between Sections (in): 0

Material: Grade 50

Center Line Reference: Middle

Vertical Orientation: Long leg vertical

Horizontal Orientation: N/A

Right Diagonal

Top Left Distance (in): 0.000000

Bottom Right Distance (in): -3.000000

Begin Offset (in): 0.000000

End Offset (in): 16.000000

Section: L6X6X3/8

Double Section: No

Gap Between Sections (in): 0

Material: Grade 50

Center Line Reference: Middle

Vertical Orientation: Long leg vertical

Horizontal Orientation: N/A

Cross-frame/Diaphragm Location

Member Group:

Bay 01

No.	Location Type	Left Location	Right Location	Link Left-Right	Cross-Frame/ Diaphragm	CFD Orientation	Connection Type	Permanent/ Temporary
1	Relative	1.0000	1.0000	Yes	END DIA	Upstation	Welded	Permanent
2	Relative	0.0000	0.0000	Yes	END DIA	Upstation	Welded	Permanent
3	Absolute (ft)	23.0000	23.0000	Yes	CROSS FRAME	Upstation	Welded	Permanent

Bay 01

No.	Location Type	Left Location	Right Location	Link Left-Right	Cross-Frame/ Diaphragm	CFD Orientation	Connection Type	Permanent/ Temporary
4	Absolute (ft)	46.0000	46.0000	Yes	CROSS FRAME	Upstation	Welded	Permanent
5	Absolute (ft)	69.0000	69.0000	Yes	CROSS FRAME	Upstation	Welded	Permanent
6	Absolute (ft)	92.0000	92.0000	Yes	CROSS FRAME	Upstation	Welded	Permanent
7	Absolute (ft)	115.2500	115.2500	Yes	CROSS FRAME	Upstation	Welded	Permanent
8	Absolute (ft)	138.2500	138.2500	Yes	CROSS FRAME	Upstation	Welded	Permanent
9	Absolute (ft)	161.2500	161.2500	Yes	CROSS FRAME	Upstation	Welded	Permanent
10	Absolute (ft)	184.2500	184.2500	Yes	CROSS FRAME	Upstation	Welded	Permanent

Bay 02

No.	Location Type	Left Location	Right Location	Link Left-Right	Cross-Frame/ Diaphragm	CFD Orientation	Connection Type	Permanent/ Temporary
1	Relative	1.0000	1.0000	Yes	END DIA	Upstation	Welded	Permanent
2	Relative	0.0000	0.0000	Yes	END DIA	Upstation	Welded	Permanent
3	Absolute (ft)	23.0000	23.0000	Yes	CROSS FRAME	Upstation	Welded	Permanent
4	Absolute (ft)	46.0000	46.0000	Yes	CROSS FRAME	Upstation	Welded	Permanent
5	Absolute (ft)	69.0000	69.0000	Yes	CROSS FRAME	Upstation	Welded	Permanent
6	Absolute (ft)	92.0000	92.0000	Yes	CROSS FRAME	Upstation	Welded	Permanent
7	Absolute (ft)	115.2500	115.2500	Yes	CROSS FRAME	Upstation	Welded	Permanent
8	Absolute (ft)	138.2500	138.2500	Yes	CROSS FRAME	Upstation	Welded	Permanent
9	Absolute (ft)	161.2500	161.2500	Yes	CROSS FRAME	Upstation	Welded	Permanent
10	Absolute (ft)	184.2500	184.2500	Yes	CROSS FRAME	Upstation	Welded	Permanent

Bay 03

No.	Location Type	Left Location	Right Location	Link Left-Right	Cross-Frame/ Diaphragm	CFD Orientation	Connection Type	Permanent/ Temporary
1	Relative	1.0000	1.0000	Yes	END DIA	Upstation	Welded	Permanent
2	Relative	0.0000	0.0000	Yes	END DIA	Upstation	Welded	Permanent
3	Absolute (ft)	23.0000	23.0000	Yes	CROSS FRAME	Upstation	Welded	Permanent
4	Absolute (ft)	46.0000	46.0000	Yes	CROSS FRAME	Upstation	Welded	Permanent
5	Absolute (ft)	69.0000	69.0000	Yes	CROSS FRAME	Upstation	Welded	Permanent
6	Absolute (ft)	92.0000	92.0000	Yes	CROSS FRAME	Upstation	Welded	Permanent
7	Absolute (ft)	115.2500	115.2500	Yes	CROSS FRAME	Upstation	Welded	Permanent
8	Absolute (ft)	138.2500	138.2500	Yes	CROSS FRAME	Upstation	Welded	Permanent
9	Absolute (ft)	161.2500	161.2500	Yes	CROSS FRAME	Upstation	Welded	Permanent
10	Absolute (ft)	184.2500	184.2500	Yes	CROSS FRAME	Upstation	Welded	Permanent

Stiffener Definition

Cross Frame

Function: Connection plate

Width (in): 7.5000

Thickness (in): 0.6250

Material: Grade 50

Corner Clip:

Top Inner H (in): 1.0000

Top Inner V(in): 3.0000

Top Outer H (in): 0.0000

Top Outer V (in): 0.0000

Bottom Inner H (in): 1.0000

Bottom Inner V(in): 3.0000

Bottom Outer H (in): 0.0000

Bottom Outer V (in): 0.0000

Bearing

Function: Connection plate

Width (in): 9.0000

Thickness (in): 1.0000

Material: Grade 50

Corner Clip:

Top Inner H (in): 1.0000

Top Inner V(in): 3.0000

Top Outer H (in): 0.0000

Top Outer V (in): 0.0000

Bottom Inner H (in): 1.5000

Bottom Inner V(in): 3.0000

Bottom Outer H (in): 0.0000

Bottom Outer V (in): 0.0000

Diaphragm

Function: Connection plate

Width (in): 10.0000

Thickness (in): 1.0000

Material: Grade 50

Corner Clip:

Top Inner H (in): 1.0000

Top Inner V(in): 3.0000

Top Outer H (in): 0.0000

Top Outer V (in): 0.0000

Bottom Inner H (in): 1.5000

Bottom Inner V(in): 0.0000

Bottom Outer H (in): 0.0000

Bottom Outer V (in): 0.0000

Date:	8/2/2021	Span3-5ft-EB.lbsx	
Time:	2:36 PM	Bentley LEAP Bridge Steel [AASHTO LRFD 8th Ed. with 2017 Interims]	v21.00.00.28

Stiffener Locations

Transversal Stiffener:

Member Group:

Member 01

No.	Location Type	Location	Position	Web	Stiffener	Dist. from Top (in)	Dist. from Bottom (in)
1	Relative	0.0000	Both		Diaphragm	0.0000	0.0000
2	Absolute (ft)	0.4167	Both		Bearing	0.0000	0.0000
3	Absolute (ft)	0.8333	Both		Bearing	0.0000	0.0000
4	Absolute (ft)	2.2083	Both		Bearing	0.0000	0.0000
5	Absolute (ft)	10.0000	Both		Cross Frame	0.0000	0.0000
6	Relative	0.1095	Both		Cross Frame	0.0000	0.0000
7	Absolute (ft)	30.0000	Both		Cross Frame	0.0000	0.0000
8	Relative	0.2190	Both		Cross Frame	0.0000	0.0000
9	Relative	0.3286	Both		Cross Frame	0.0000	0.0000
10	Relative	0.4381	Both		Cross Frame	0.0000	0.0000
11	Relative	0.5488	Both		Cross Frame	0.0000	0.0000
12	Relative	0.6583	Both		Cross Frame	0.0000	0.0000
13	Relative	0.7679	Both		Cross Frame	0.0000	0.0000
14	Absolute (ft)	180.0000	Both		Cross Frame	0.0000	0.0000
15	Relative	0.8774	Both		Cross Frame	0.0000	0.0000
16	Absolute (ft)	200.0000	Both		Cross Frame	0.0000	0.0000
17	Absolute (ft)	207.7917	Both		Bearing	0.0000	0.0000
18	Absolute (ft)	209.1667	Both		Bearing	0.0000	0.0000
19	Absolute (ft)	209.5833	Both		Bearing	0.0000	0.0000
20	Relative	1.0000	Both		Diaphragm	0.0000	0.0000

Member 02

No.	Location Type	Location	Position	Web	Stiffener	Dist. from Top (in)	Dist. from Bottom (in)
1	Relative	0.0000	Both		Diaphragm	0.0000	0.0000
2	Absolute (ft)	0.4167	Both		Bearing	0.0000	0.0000
3	Absolute (ft)	0.8333	Both		Bearing	0.0000	0.0000
4	Absolute (ft)	2.2083	Both		Bearing	0.0000	0.0000
5	Absolute (ft)	10.0000	Both		Cross Frame	0.0000	0.0000
6	Relative	0.1095	Both		Cross Frame	0.0000	0.0000

Member 02

No.	Location Type	Location	Position	Web	Stiffener	Dist. from Top (in)	Dist. from Bottom (in)
7	Absolute (ft)	30.0000	Both		Cross Frame	0.0000	0.0000
8	Relative	0.2190	Both		Cross Frame	0.0000	0.0000
9	Relative	0.3286	Both		Cross Frame	0.0000	0.0000
10	Relative	0.4381	Both		Cross Frame	0.0000	0.0000
11	Relative	0.5488	Both		Cross Frame	0.0000	0.0000
12	Relative	0.6583	Both		Cross Frame	0.0000	0.0000
13	Relative	0.7679	Both		Cross Frame	0.0000	0.0000
14	Absolute (ft)	180.0000	Both		Cross Frame	0.0000	0.0000
15	Relative	0.8774	Both		Cross Frame	0.0000	0.0000
16	Absolute (ft)	200.0000	Both		Cross Frame	0.0000	0.0000
17	Absolute (ft)	207.7917	Both		Bearing	0.0000	0.0000
18	Absolute (ft)	209.1667	Both		Bearing	0.0000	0.0000
19	Absolute (ft)	209.5833	Both		Bearing	0.0000	0.0000
20	Relative	1.0000	Both		Diaphragm	0.0000	0.0000

Member 03

No.	Location Type	Location	Position	Web	Stiffener	Dist. from Top (in)	Dist. from Bottom (in)
1	Relative	0.0000	Both		Diaphragm	0.0000	0.0000
2	Absolute (ft)	0.4167	Both		Bearing	0.0000	0.0000
3	Absolute (ft)	0.8333	Both		Bearing	0.0000	0.0000
4	Absolute (ft)	2.2083	Both		Bearing	0.0000	0.0000
5	Absolute (ft)	10.0000	Both		Cross Frame	0.0000	0.0000
6	Relative	0.1095	Both		Cross Frame	0.0000	0.0000
7	Absolute (ft)	30.0000	Both		Cross Frame	0.0000	0.0000
8	Relative	0.2190	Both		Cross Frame	0.0000	0.0000
9	Relative	0.3286	Both		Cross Frame	0.0000	0.0000
10	Relative	0.4381	Both		Cross Frame	0.0000	0.0000
11	Relative	0.5488	Both		Cross Frame	0.0000	0.0000
12	Relative	0.6583	Both		Cross Frame	0.0000	0.0000
13	Relative	0.7679	Both		Cross Frame	0.0000	0.0000
14	Absolute (ft)	180.0000	Both		Cross Frame	0.0000	0.0000
15	Relative	0.8774	Both		Cross Frame	0.0000	0.0000
16	Absolute (ft)	200.0000	Both		Cross Frame	0.0000	0.0000
17	Absolute (ft)	207.7917	Both		Bearing	0.0000	0.0000

Member 03

No.	Location Type	Location	Position	Web	Stiffener	Dist. from Top (in)	Dist. from Bottom (in)
18	Absolute (ft)	209.1667	Both		Bearing	0.0000	0.0000
19	Absolute (ft)	209.5833	Both		Bearing	0.0000	0.0000
20	Relative	1.0000	Both		Diaphragm	0.0000	0.0000

Member 04

No.	Location Type	Location	Position	Web	Stiffener	Dist. from Top (in)	Dist. from Bottom (in)
1	Relative	0.0000	Both		Diaphragm	0.0000	0.0000
2	Absolute (ft)	0.4167	Both		Bearing	0.0000	0.0000
3	Absolute (ft)	0.8333	Both		Bearing	0.0000	0.0000
4	Absolute (ft)	2.2083	Both		Bearing	0.0000	0.0000
5	Absolute (ft)	10.0000	Both		Cross Frame	0.0000	0.0000
6	Relative	0.1095	Both		Cross Frame	0.0000	0.0000
7	Absolute (ft)	30.0000	Both		Cross Frame	0.0000	0.0000
8	Relative	0.2190	Both		Cross Frame	0.0000	0.0000
9	Relative	0.3286	Both		Cross Frame	0.0000	0.0000
10	Relative	0.4381	Both		Cross Frame	0.0000	0.0000
11	Relative	0.5488	Both		Cross Frame	0.0000	0.0000
12	Relative	0.6583	Both		Cross Frame	0.0000	0.0000
13	Relative	0.7679	Both		Cross Frame	0.0000	0.0000
14	Absolute (ft)	180.0000	Both		Cross Frame	0.0000	0.0000
15	Relative	0.8774	Both		Cross Frame	0.0000	0.0000
16	Absolute (ft)	200.0000	Both		Cross Frame	0.0000	0.0000
17	Absolute (ft)	207.7917	Both		Bearing	0.0000	0.0000
18	Absolute (ft)	209.1667	Both		Bearing	0.0000	0.0000
19	Absolute (ft)	209.5833	Both		Bearing	0.0000	0.0000
20	Relative	1.0000	Both		Diaphragm	0.0000	0.0000

Shear Connector Definition

Shear Connector Type: Stud

No.	Name	Height (in)	Diameter (in)	Material
1	ShearConn01	6.500004	0.875004	None

Date:	8/2/2021	Span3-5ft-EB.lbsx	
Time:	2:36 PM	Bentley LEAP Bridge Steel [AASHTO LRFD 8th Ed. with 2017 Interims]	v21.00.00.28

Appurtenance Locations

Parapet

No.	Appurtenance Name	Reference Element	Reference Offset(ft)	Refrence Location	Reference Back	Reference Method	Offset (ft)	Reference Ahead	Reference Method	Offset (ft)
1	Parapet 1	Right edge of slab	6.0000	Centerline	Support 01	Along alignment	0.0000	Support 02	Along alignment	0.0000
2	Parapet 2	Left edge of slab	0.0000	Outside face	Support 01	Along alignment	0.0000	Support 02	Along alignment	0.0000

Railing

No.	Appurtenance Name	Reference Element	Reference Offset(ft)	Refrence Location	Reference Back	Reference Method	Offset (ft)	Reference Ahead	Reference Method	Offset (ft)
1	Railing 1	Right edge of slab	0.0000	Outside face	Support 01	Along alignment	0.0000	Support 02	Along alignment	0.0000

Loads

Dead Loads / DC1 Group

Stay In Place Form

Member Group	Girder	Load Type	Reference Type	Reference	Dist Unit	Val 1 (Kips, Kip/ft, Kip-ft)	Loc 1 (ft or %)	Val 2 (Kips or Kip/ft)	Loc 2 (ft or %)
Group01	1	Trapezoidal	Group	---	ft	0.1500	0.0000	0.1500	210.0000
Group01	2	Trapezoidal	Group	---	ft	0.1800	0.0000	0.1800	210.0000
Group01	3	Trapezoidal	Group	---	ft	0.1800	0.0000	0.1800	210.0000
Group01	4	Trapezoidal	Group	---	ft	0.1660	0.0000	0.1660	210.0000

Initial - Self Weight Steel

Member Group	Girder	Load Type	Reference Type	Reference	Dist Unit	Val 1 (Kips, Kip/ft, Kip-ft)	Loc 1 (ft or %)	Val 2 (Kips or Kip/ft)	Loc 2 (ft or %)
Group01	1	Trapezoidal	Group	---	ft	0.3039	0.0000	0.3039	26.0000
Group01	1	Trapezoidal	Group	---	ft	0.3464	26.0000	0.3464	42.0000
Group01	1	Trapezoidal	Group	---	ft	0.4665	42.0000	0.4665	168.0000
Group01	1	Trapezoidal	Group	---	ft	0.3464	168.0000	0.3464	184.0000
Group01	1	Trapezoidal	Group	---	ft	0.3039	184.0000	0.3039	210.0000
Group01	2	Trapezoidal	Group	---	ft	0.3039	0.0000	0.3039	26.0000

Member Group	Girder	Load Type	Reference Type	Reference	Dist Unit	Val 1 (Kips, Kip/ft, Kip-ft)	Loc 1 (ft or %)	Val 2 (Kips or Kip/ft)	Loc 2 (ft or %)
Group01	2	Trapezoidal	Group	---	ft	0.3464	26.0000	0.3464	42.0000
Group01	2	Trapezoidal	Group	---	ft	0.4665	42.0000	0.4665	168.0000
Group01	2	Trapezoidal	Group	---	ft	0.3464	168.0000	0.3464	184.0000
Group01	2	Trapezoidal	Group	---	ft	0.3039	184.0000	0.3039	210.0000
Group01	3	Trapezoidal	Group	---	ft	0.3039	0.0000	0.3039	26.0000
Group01	3	Trapezoidal	Group	---	ft	0.3464	26.0000	0.3464	42.0000
Group01	3	Trapezoidal	Group	---	ft	0.4665	42.0000	0.4665	168.0000
Group01	3	Trapezoidal	Group	---	ft	0.3464	168.0000	0.3464	184.0000
Group01	3	Trapezoidal	Group	---	ft	0.3039	184.0000	0.3039	210.0000
Group01	4	Trapezoidal	Group	---	ft	0.3039	0.0000	0.3039	26.0000
Group01	4	Trapezoidal	Group	---	ft	0.3464	26.0000	0.3464	42.0000
Group01	4	Trapezoidal	Group	---	ft	0.4665	42.0000	0.4665	168.0000
Group01	4	Trapezoidal	Group	---	ft	0.3464	168.0000	0.3464	184.0000
Group01	4	Trapezoidal	Group	---	ft	0.3039	184.0000	0.3039	210.0000

Stage 01 - Self Weight Slab

Member Group	Girder	Load Type	Reference Type	Reference	Dist Unit	Val 1 (Kips, Kip/ft, Kip-ft)	Loc 1 (ft or %)	Val 2 (Kips or Kip/ft)	Loc 2 (ft or %)
Group01	1	Trapezoidal	Group	---	ft	1.1330	0.0000	1.1330	210.0000
Group01	2	Trapezoidal	Group	---	ft	1.2000	0.0000	1.2000	210.0000
Group01	3	Trapezoidal	Group	---	ft	1.2000	0.0000	1.2000	210.0000
Group01	4	Trapezoidal	Group	---	ft	1.0510	0.0000	1.0510	210.0000

Final - Self Weight Slab

Member Group	Girder	Load Type	Reference Type	Reference	Dist Unit	Val 1 (Kips, Kip/ft, Kip-ft)	Loc 1 (ft or %)	Val 2 (Kips or Kip/ft)	Loc 2 (ft or %)
Group01	1	Trapezoidal	Group	---	ft	1.1330	0.0000	1.1330	210.0000
Group01	2	Trapezoidal	Group	---	ft	1.2000	0.0000	1.2000	210.0000
Group01	3	Trapezoidal	Group	---	ft	1.2000	0.0000	1.2000	210.0000
Group01	4	Trapezoidal	Group	---	ft	1.0510	0.0000	1.0510	210.0000

Initial - Self Weight Stiffeners

Member Group	Girder	Load Type	Reference Type	Reference	Dist Unit	Val 1 (Kips, Kip/ft, Kip-ft)	Loc 1 (ft or %)	Val 2 (Kips or Kip/ft)	Loc 2 (ft or %)

Date:	8/2/2021	Span3-5ft-EB.lbsx	
Time:	2:36 PM	Bentley LEAP Bridge Steel [AASHTO LRFD 8th Ed. with 2017 Interims]	v21.00.00.28

Member Group	Girder	Load Type	Reference Type	Reference	Dist Unit	Val 1 (Kips, Kip/ft, Kip-ft)	Loc 1 (ft or %)	Val 2 (Kips or Kip/ft)	Loc 2 (ft or %)
Group01	1	Point	Group	---	%	0.5266	0.0000	---	---
Group01	1	Point	Group	---	%	0.4726	0.1984	---	---
Group01	1	Point	Group	---	%	0.4726	0.3968	---	---
Group01	1	Point	Group	---	%	0.4726	1.0516	---	---
Group01	1	Point	Group	---	%	0.2462	4.7619	---	---
Group01	1	Point	Group	---	%	0.2462	10.9524	---	---
Group01	1	Point	Group	---	%	0.2462	14.2857	---	---
Group01	1	Point	Group	---	%	0.2462	21.9048	---	---
Group01	1	Point	Group	---	%	0.2462	32.8571	---	---
Group01	1	Point	Group	---	%	0.2462	43.8095	---	---
Group01	1	Point	Group	---	%	0.2462	54.8810	---	---
Group01	1	Point	Group	---	%	0.2462	65.8333	---	---
Group01	1	Point	Group	---	%	0.2462	76.7857	---	---
Group01	1	Point	Group	---	%	0.2462	85.7143	---	---
Group01	1	Point	Group	---	%	0.2462	87.7381	---	---
Group01	1	Point	Group	---	%	0.2462	95.2381	---	---
Group01	1	Point	Group	---	%	0.4726	98.9484	---	---
Group01	1	Point	Group	---	%	0.4726	99.6032	---	---
Group01	1	Point	Group	---	%	0.4726	99.8016	---	---
Group01	1	Point	Group	---	%	0.5266	100.0000	---	---
Group01	2	Point	Group	---	%	0.5266	0.0000	---	---
Group01	2	Point	Group	---	%	0.4726	0.1984	---	---
Group01	2	Point	Group	---	%	0.4726	0.3968	---	---
Group01	2	Point	Group	---	%	0.4726	1.0516	---	---
Group01	2	Point	Group	---	%	0.2462	4.7619	---	---
Group01	2	Point	Group	---	%	0.2462	10.9524	---	---
Group01	2	Point	Group	---	%	0.2462	14.2857	---	---
Group01	2	Point	Group	---	%	0.2462	21.9048	---	---
Group01	2	Point	Group	---	%	0.2462	32.8571	---	---
Group01	2	Point	Group	---	%	0.2462	43.8095	---	---
Group01	2	Point	Group	---	%	0.2462	54.8810	---	---
Group01	2	Point	Group	---	%	0.2462	65.8333	---	---
Group01	2	Point	Group	---	%	0.2462	76.7857	---	---
Group01	2	Point	Group	---	%	0.2462	85.7143	---	---
Group01	2	Point	Group	---	%	0.2462	87.7381	---	---

Date:	8/2/2021	Span3-5ft-EB.lbsx	
Time:	2:36 PM	Bentley LEAP Bridge Steel [AASHTO LRFD 8th Ed. with 2017 Interims]	v21.00.00.28

Member Group	Girder	Load Type	Reference Type	Reference	Dist Unit	Val 1 (Kips, Kip/ft, Kip-ft)	Loc 1 (ft or %)	Val 2 (Kips or Kip/ft)	Loc 2 (ft or %)
Group01	2	Point	Group	---	%	0.2462	95.2381	---	---
Group01	2	Point	Group	---	%	0.4726	98.9484	---	---
Group01	2	Point	Group	---	%	0.4726	99.6032	---	---
Group01	2	Point	Group	---	%	0.4726	99.8016	---	---
Group01	2	Point	Group	---	%	0.5266	100.0000	---	---
Group01	3	Point	Group	---	%	0.5266	0.0000	---	---
Group01	3	Point	Group	---	%	0.4726	0.1984	---	---
Group01	3	Point	Group	---	%	0.4726	0.3968	---	---
Group01	3	Point	Group	---	%	0.4726	1.0516	---	---
Group01	3	Point	Group	---	%	0.2462	4.7619	---	---
Group01	3	Point	Group	---	%	0.2462	10.9524	---	---
Group01	3	Point	Group	---	%	0.2462	14.2857	---	---
Group01	3	Point	Group	---	%	0.2462	21.9048	---	---
Group01	3	Point	Group	---	%	0.2462	32.8571	---	---
Group01	3	Point	Group	---	%	0.2462	43.8095	---	---
Group01	3	Point	Group	---	%	0.2462	54.8810	---	---
Group01	3	Point	Group	---	%	0.2462	65.8333	---	---
Group01	3	Point	Group	---	%	0.2462	76.7857	---	---
Group01	3	Point	Group	---	%	0.2462	85.7143	---	---
Group01	3	Point	Group	---	%	0.2462	87.7381	---	---
Group01	3	Point	Group	---	%	0.2462	95.2381	---	---
Group01	3	Point	Group	---	%	0.4726	98.9484	---	---
Group01	3	Point	Group	---	%	0.4726	99.6032	---	---
Group01	3	Point	Group	---	%	0.4726	99.8016	---	---
Group01	3	Point	Group	---	%	0.5266	100.0000	---	---
Group01	4	Point	Group	---	%	0.5266	0.0000	---	---
Group01	4	Point	Group	---	%	0.4726	0.1984	---	---
Group01	4	Point	Group	---	%	0.4726	0.3968	---	---
Group01	4	Point	Group	---	%	0.4726	1.0516	---	---
Group01	4	Point	Group	---	%	0.2462	4.7619	---	---
Group01	4	Point	Group	---	%	0.2462	10.9524	---	---
Group01	4	Point	Group	---	%	0.2462	14.2857	---	---
Group01	4	Point	Group	---	%	0.2462	21.9048	---	---
Group01	4	Point	Group	---	%	0.2462	32.8571	---	---
Group01	4	Point	Group	---	%	0.2462	43.8095	---	---

Date:	8/2/2021	Span3-5ft-EB.lbsx	
Time:	2:36 PM	Bentley LEAP Bridge Steel [AASHTO LRFD 8th Ed. with 2017 Interims]	v21.00.00.28

Member Group	Girder	Load Type	Reference Type	Reference	Dist Unit	Val 1 (Kips, Kip/ft, Kip-ft)	Loc 1 (ft or %)	Val 2 (Kips or Kip/ft)	Loc 2 (ft or %)
Group01	4	Point	Group	---	%	0.2462	54.8810	---	---
Group01	4	Point	Group	---	%	0.2462	65.8333	---	---
Group01	4	Point	Group	---	%	0.2462	76.7857	---	---
Group01	4	Point	Group	---	%	0.2462	85.7143	---	---
Group01	4	Point	Group	---	%	0.2462	87.7381	---	---
Group01	4	Point	Group	---	%	0.2462	95.2381	---	---
Group01	4	Point	Group	---	%	0.4726	98.9484	---	---
Group01	4	Point	Group	---	%	0.4726	99.6032	---	---
Group01	4	Point	Group	---	%	0.4726	99.8016	---	---
Group01	4	Point	Group	---	%	0.5266	100.0000	---	---

Initial - Self Weight X-Frames

Member Group	Girder	Load Type	Reference Type	Reference	Dist Unit	Val 1 (Kips, Kip/ft, Kip-ft)	Loc 1 (ft or %)	Val 2 (Kips or Kip/ft)	Loc 2 (ft or %)
Group01	1	Point	Group	---	%	0.6607	100.0000	---	---
Group01	2	Point	Group	---	%	1.3214	100.0000	---	---
Group01	1	Point	Group	---	%	0.6607	0.0000	---	---
Group01	2	Point	Group	---	%	1.3214	0.0000	---	---
Group01	1	Point	Group	---	%	0.3182	10.9524	---	---
Group01	2	Point	Group	---	%	0.6363	10.9524	---	---
Group01	1	Point	Group	---	%	0.3182	21.9048	---	---
Group01	2	Point	Group	---	%	0.6363	21.9048	---	---
Group01	1	Point	Group	---	%	0.3182	32.8571	---	---
Group01	2	Point	Group	---	%	0.6363	32.8571	---	---
Group01	1	Point	Group	---	%	0.3182	43.8095	---	---
Group01	2	Point	Group	---	%	0.6363	43.8095	---	---
Group01	1	Point	Group	---	%	0.3182	54.8810	---	---
Group01	2	Point	Group	---	%	0.6363	54.8810	---	---
Group01	1	Point	Group	---	%	0.3182	65.8333	---	---
Group01	2	Point	Group	---	%	0.6363	65.8333	---	---
Group01	1	Point	Group	---	%	0.3182	76.7857	---	---
Group01	2	Point	Group	---	%	0.6363	76.7857	---	---
Group01	1	Point	Group	---	%	0.3182	87.7381	---	---
Group01	2	Point	Group	---	%	0.6363	87.7381	---	---
Group01	3	Point	Group	---	%	1.3214	100.0000	---	---

Date:	8/2/2021	Span3-5ft-EB.lbsx	
Time:	2:36 PM	Bentley LEAP Bridge Steel [AASHTO LRFD 8th Ed. with 2017 Interims]	v21.00.00.28

Member Group	Girder	Load Type	Reference Type	Reference	Dist Unit	Val 1 (Kips, Kip/ft, Kip-ft)	Loc 1 (ft or %)	Val 2 (Kips or Kip/ft)	Loc 2 (ft or %)
Group01	3	Point	Group	---	%	1.3214	0.0000	---	---
Group01	3	Point	Group	---	%	0.6363	10.9524	---	---
Group01	3	Point	Group	---	%	0.6363	21.9048	---	---
Group01	3	Point	Group	---	%	0.6363	32.8571	---	---
Group01	3	Point	Group	---	%	0.6363	43.8095	---	---
Group01	3	Point	Group	---	%	0.6363	54.8810	---	---
Group01	3	Point	Group	---	%	0.6363	65.8333	---	---
Group01	3	Point	Group	---	%	0.6363	76.7857	---	---
Group01	3	Point	Group	---	%	0.6363	87.7381	---	---
Group01	4	Point	Group	---	%	0.6607	100.0000	---	---
Group01	4	Point	Group	---	%	0.6607	0.0000	---	---
Group01	4	Point	Group	---	%	0.3182	10.9524	---	---
Group01	4	Point	Group	---	%	0.3182	21.9048	---	---
Group01	4	Point	Group	---	%	0.3182	32.8571	---	---
Group01	4	Point	Group	---	%	0.3182	43.8095	---	---
Group01	4	Point	Group	---	%	0.3182	54.8810	---	---
Group01	4	Point	Group	---	%	0.3182	65.8333	---	---
Group01	4	Point	Group	---	%	0.3182	76.7857	---	---
Group01	4	Point	Group	---	%	0.3182	87.7381	---	---

Dead Loads / DC2 Group

Final - Self Weight Appurtenance - Parapets

Member Group	Girder	Load Type	Reference Type	Reference	Dist Unit	Val 1 (Kips, Kip/ft, Kip-ft)	Loc 1 (ft or %)	Val 2 (Kips or Kip/ft)	Loc 2 (ft or %)
Group01	1	Trapezoidal	Group	---	ft	0.2120	0.0000	0.2120	210.0000
Group01	3	Trapezoidal	Group	---	ft	0.2120	0.0000	0.2120	210.0000
Group01	4	Trapezoidal	Group	---	ft	0.2120	0.0000	0.2120	210.0000
Group01	2	Trapezoidal	Group	---	ft	0.2120	0.0000	0.2120	210.0000

Final - Self Weight Appurtenance - Railings

Member Group	Girder	Load Type	Reference Type	Reference	Dist Unit	Val 1 (Kips, Kip/ft, Kip-ft)	Loc 1 (ft or %)	Val 2 (Kips or Kip/ft)	Loc 2 (ft or %)
Group01	1	Trapezoidal	Group	---	ft	0.0638	0.0000	0.0638	210.0000
Group01	3	Trapezoidal	Group	---	ft	0.0638	0.0000	0.0638	210.0000

Date:	8/2/2021	Span3-5ft-EB.lbsx	
Time:	2:36 PM	Bentley LEAP Bridge Steel [AASHTO LRFD 8th Ed. with 2017 Interims]	v21.00.00.28

Member Group	Girder	Load Type	Reference Type	Reference	Dist Unit	Val 1 (Kips, Kip/ft, Kip-ft)	Loc 1 (ft or %)	Val 2 (Kips or Kip/ft)	Loc 2 (ft or %)
Group01	4	Trapezoidal	Group	---	ft	0.0638	0.0000	0.0638	210.0000
Group01	2	Trapezoidal	Group	---	ft	0.0638	0.0000	0.0638	210.0000

Dead Loads / DW Group

Final - Wearing Surface

Member Group	Girder	Load Type	Reference Type	Reference	Dist Unit	Val 1 (Kips, Kip/ft, Kip-ft)	Loc 1 (ft or %)	Val 2 (Kips or Kip/ft)	Loc 2 (ft or %)
Group01	1	Trapezoidal	Group	---	ft	0.1719	0.0000	0.1719	210.0000
Group01	2	Trapezoidal	Group	---	ft	0.1719	0.0000	0.1719	210.0000
Group01	3	Trapezoidal	Group	---	ft	0.1719	0.0000	0.1719	210.0000
Group01	4	Trapezoidal	Group	---	ft	0.1719	0.0000	0.1719	210.0000

Live Loads

HL-93

Truck Name	Include Lane	Notional	Special Envelope	Special Env. Factor	Lane Intensity (k/ft)
Double Tandem	Yes	Yes	Yes	1.0000	0.6400
Axle No.	**Intensity (k/ft)**	**Max Spacing (ft)**	**Min Spacing (ft)**	**Increment (ft)**	
1	25.0000	0.0000	0.0000	0.0000	
2	25.0000	4.0000	4.0000	0.0000	
3	25.0000	40.0000	26.0000	4.0000	
4	25.0000	4.0000	4.0000	0.0000	
Double Truck	Yes	Yes	Yes	0.9000	0.6400
Axle No.	**Intensity (k/ft)**	**Max Spacing (ft)**	**Min Spacing (ft)**	**Increment (ft)**	
1	8.0000	0.0000	0.0000	0.0000	
2	32.0000	14.0000	14.0000	0.0000	
3	32.0000	14.0000	14.0000	0.0000	
4	8.0000	300.0000	50.0000	14.0000	
5	32.0000	14.0000	14.0000	0.0000	
6	32.0000	14.0000	14.0000	0.0000	
Design Lane	No	No	No	---	---
Axle No.	**Intensity (k/ft)**	**Max Spacing (ft)**	**Min Spacing (ft)**	**Increment (ft)**	
Design Tandem	Yes	Yes	No	---	0.6400

Truck Name	Include Lane	Notional	Special Envelope	Special Env. Factor	Lane Intensity (k/ft)
Axle No.	**Intensity (k/ft)**	**Max Spacing (ft)**	**Min Spacing (ft)**	**Increment (ft)**	
1	25.0000	0.0000	0.0000	0.0000	
2	25.0000	4.0000	4.0000	0.0000	
Design Truck	Yes	Yes	No	---	0.6400
Axle No.	**Intensity (k/ft)**	**Max Spacing (ft)**	**Min Spacing (ft)**	**Increment (ft)**	
1	8.0000	0.0000	0.0000	0.0000	
2	32.0000	14.0000	14.0000	0.0000	
3	32.0000	30.0000	14.0000	2.0000	

Fatigue Load

Truck Name	Include Lane	Notional	Special Envelope	Special Env. Factor	Lane Intensity (k/ft)
Fatigue Truck	No	No	No	---	---
Axle No.	**Intensity (k/ft)**	**Max Spacing (ft)**	**Min Spacing (ft)**	**Increment (ft)**	
1	8.0000	0.0000	0.0000	0.0000	
2	32.0000	14.0000	14.0000	0.0000	
3	32.0000	30.0000	30.0000	0.0000	

HL-93 (Deflection per AASHTO)

Truck Name	Include Lane	Notional	Special Envelope	Special Env. Factor	Lane Intensity (k/ft)
Design Lane	No	No	No	---	---
Axle No.	**Intensity (k/ft)**	**Max Spacing (ft)**	**Min Spacing (ft)**	**Increment (ft)**	
Design Truck	No	No	No	---	---
Axle No.	**Intensity (k/ft)**	**Max Spacing (ft)**	**Min Spacing (ft)**	**Increment (ft)**	
1	8.0000	0.0000	0.0000	0.0000	
2	32.0000	14.0000	14.0000	0.0000	
3	32.0000	30.0000	14.0000	2.0000	
Design Truck 25%	Yes	No	No	---	0.6400
Axle No.	**Intensity (k/ft)**	**Max Spacing (ft)**	**Min Spacing (ft)**	**Increment (ft)**	
1	2.0000	0.0000	0.0000	0.0000	
2	8.0000	14.0000	14.0000	0.0000	
3	8.0000	30.0000	14.0000	2.0000	

FL120

Truck Name	Include Lane	Notional	Special Envelope	Special Env. Factor	Lane Intensity (k/ft)

Truck Name	Include Lane	Notional	Special Envelope	Special Env. Factor	Lane Intensity (k/ft)
FL120	Yes	No	No	---	0.2000

Axle No.	Intensity (k/ft)	Max Spacing (ft)	Min Spacing (ft)	Increment (ft)
1	13.3300	0.0000	0.0000	0.0000
2	53.3300	14.0000	14.0000	0.0000
3	53.3300	14.0000	14.0000	0.0000

FL120 Laneload	No	No	No	---	---

Axle No.	Intensity (k/ft)	Max Spacing (ft)	Min Spacing (ft)	Increment (ft)

d. LEAP Steel Bridge Output – Span 3

Date:	8/2/2021	Span3-5ft-EB.lbsx	
Time:	2:26 PM	Bentley LEAP Bridge Steel [AASHTO LRFD 8th Ed. with 2017 Interims]	v21.00.00.28

Load Rating

Group01 Member 01

Design Inventory (Strength I) Permit

FLEXURE RATING

POI Loc. (ft)	Moment Rating Factor	Vehicle Tonnage (Tons)	Rating Tonnage (Tons)	Moment/Stress Resistance (kip-in / ksi)	Controlling Equation	φc	φs	DC1 (kip-in / ksi)	DC2 (kip-in / ksi)	DW (kip-ft / ksi)	flDC1 (ksi)	flDC2 (ksi)	flDW (ksi)	LL (kip-in / ksi)	flLL (ksi)
0.000	474.418	59.995	28462.714	48.881	Equation 6.10.8.1.1-1 lateral torsion buckling	1	1	0.000	0.000	0.000	0.007	0.002	0.001	-0.006	0.290
0.400	14.716	59.995	882.890	48.881	Equation 6.10.8.1.1-1 lateral torsion buckling	1	1	-0.003	0.001	0.001	0.090	0.019	0.014	-3.039	0.839
0.500	999.990	59.995	59994.402	231116.686	Equation 6.10.7.1.1-1	1	1	0.000	0.000	0.000	0.000	0.000	0.000	0.000	0.000
0.600	9.396	59.995	563.715	48.881	Equation 6.10.8.1.1-1 lateral torsion buckling	1	1	0.165	0.011	0.008	0.099	0.021	0.016	-4.911	0.919
11.500	6.909	59.995	414.504	231116.686	Equation 6.10.7.1.1-1	1	1	29111.174	4461.911	3337.817	0.071	0.005	0.004	24403.799	3.656

Date:	8/2/2021	Span3-5ft-EB.lbsx	
Time:	2:26 PM	Bentley LEAP Bridge Steel [AASHTO LRFD 8th Ed. with 2017 Interims]	v21.00.00.28

FLEXURE RATING

POI Loc. (ft)	Moment Rating Factor	Vehicle Tonnage (Tons)	Rating Tonnage (Tons)	Moment/Stress Resistance (kip-in / ksi)	Controlling Equation	φc	φs	DC1 (kip-in / ksi)	DC2 (kip-in / ksi)	DW (kip-ft / ksi)	flDC1 (ksi)	flDC2 (ksi)	flDW (ksi)	LL (kip-in / ksi)	flLL (ksi)
21.400	3.262	59.995	195.727	231116.686	Equation 6.10.7.1.1-1	1	1	52707.459	8032.651	6008.977	0.046	-0.009	-0.007	43049.014	7.804
23.000	2.955	59.995	177.270	231116.686	Equation 6.10.7.1.1-1	1	1	56302.617	8573.282	6413.406	0.058	-0.011	-0.008	46219.410	8.473
25.900	2.457	59.995	147.394	231116.686	Equation 6.10.7.1.1-1	1	1	62626.686	9535.226	7133.007	0.033	-0.013	-0.010	51889.939	10.902
26.100	3.474	59.995	208.405	289532.167	Equation 6.10.7.1.1-1	1	1	63051.380	9573.853	7161.902	0.023	-0.007	-0.005	52297.306	6.180
34.500	2.732	59.995	163.908	289532.167	Equation 6.10.7.1.1-1	1	1	80156.692	12139.069	9080.861	-0.022	0.002	0.001	66304.646	2.030
41.900	2.104	59.995	126.237	289532.167	Equation 6.10.7.1.1-1	1	1	93788.650	14170.840	10600.765	-0.115	0.016	0.012	77195.319	3.283
42.100	3.346	59.995	200.731	384994.225	Equation 6.10.7.1.1-1	1	1	94140.671	14196.129	10619.683	-0.037	0.005	0.004	77472.466	1.023
42.300	3.329	59.995	199.739	384994.225	Equation 6.10.7.1.1-1	1	1	94488.789	14248.186	10658.626	-0.039	0.005	0.004	77667.547	1.057
46.000	2.993	59.995	179.572	384994.225	Equation 6.10.7.1.1-1	1	1	100752.648	15172.292	11349.921	-0.068	0.008	0.006	82685.124	1.721
57.500	2.390	59.995	143.376	384994.225	Equation 6.10.7.1.1-1	1	1	117620.034	17682.084	13227.419	-0.029	0.008	0.006	95799.024	1.622
63.200	2.190	59.995	131.381	384994.225	Equation 6.10.7.1.1-1	1	1	124694.542	18727.229	14009.259	-0.044	0.009	0.006	100944.569	1.535

Date:	8/2/2021	Span3-5ft-EB.lbsx	
Time:	2:26 PM	Bentley LEAP Bridge Steel [AASHTO LRFD 8th Ed. with 2017 Interims]	v21.00.00.28

FLEXURE RATING

POI Loc. (ft)	Moment Rating Factor	Vehicle Tonnage (Tons)	Rating Tonnage (Tons)	Moment/Stress Resistance (kip-in / ksi)	Controlling Equation	φc	φs	DC1 (kip-in / ksi)	DC2 (kip-in / ksi)	DW (kip-ft / ksi)	flDC1 (ksi)	flDC2 (ksi)	flDW (ksi)	LL (kip-in / ksi)	flLL (ksi)
69.000	1.981	59.995	118.851	384994.225	Equation 6.10.7.1.1-1	1	1	131015.009	19641.729	14693.367	-0.098	0.012	0.009	107826.876	1.559
80.500	1.750	59.995	105.002	384994.225	Equation 6.10.7.1.1-1	1	1	140559.728	21061.269	15755.281	-0.045	0.010	0.007	115297.506	1.747
84.100	1.699	59.995	101.947	384994.225	Equation 6.10.7.1.1-1	1	1	142834.639	21396.998	16006.430	-0.054	0.010	0.008	117099.629	1.781
92.000	1.615	59.995	96.904	384994.225	Equation 6.10.7.1.1-1	1	1	146633.678	21938.761	16411.705	-0.127	0.015	0.011	120136.284	1.905
103.625	1.575	59.995	94.463	384994.225	Equation 6.10.7.1.1-1	1	1	148837.690	22279.733	16666.778	-0.056	0.011	0.008	121500.486	1.979
105.000	1.577	59.995	94.582	384994.225	Equation 6.10.7.1.1-1	1	1	148862.976	22283.518	16669.608	-0.058	0.011	0.008	121349.418	1.964
115.250	1.601	59.995	96.036	384994.225	Equation 6.10.7.1.1-1	1	1	147518.705	22069.283	16509.346	-0.122	0.014	0.011	120835.962	1.761
125.900	1.690	59.995	101.363	384994.225	Equation 6.10.7.1.1-1	1	1	142824.416	21396.336	16005.935	-0.049	0.010	0.008	117548.723	1.918
126.750	1.700	59.995	101.993	384994.225	Equation 6.10.7.1.1-1	1	1	142322.609	21321.367	15949.854	-0.048	0.010	0.007	117157.104	1.926
138.250	1.887	59.995	113.217	384994.225	Equation 6.10.7.1.1-1	1	1	133655.751	20031.230	14984.742	-0.090	0.011	0.008	111511.728	1.602
146.800	2.132	59.995	127.906	384994.225	Equation 6.10.7.1.1-1	1	1	124676.689	18726.550	14008.750	-0.039	0.008	0.006	104300.002	1.264

Date:	8/2/2021	Span3-5ft-EB.lbsx	
Time:	2:26 PM	Bentley LEAP Bridge Steel [AASHTO LRFD 8th Ed. with 2017 Interims]	v21.00.00.28

FLEXURE RATING

POI Loc. (ft)	Moment Rating Factor	Vehicle Tonnage (Tons)	Rating Tonnage (Tons)	Moment/Stress Resistance (kip-in / ksi)	Controlling Equation	φc	φs	DC1 (kip-in / ksi)	DC2 (kip-in / ksi)	DW (kip-ft / ksi)	flDC1 (ksi)	flDC2 (ksi)	flDW (ksi)	LL (kip-in / ksi)	flLL (ksi)
149.750	2.238	59.995	134.245	384994.225	Equation 6.10.7.1.1-1	1	1	121134.280	18202.720	13616.890	-0.034	0.007	0.005	101516.328	1.124
161.250	2.792	59.995	167.509	384994.225	Equation 6.10.7.1.1-1	1	1	105141.024	15825.673	11838.696	-0.078	0.008	0.006	88557.300	0.880
167.700	3.188	59.995	191.258	384994.225	Equation 6.10.7.1.1-1	1	1	94470.731	14253.319	10662.466	-0.031	0.005	0.004	80988.880	1.170
167.900	3.203	59.995	192.154	384994.225	Equation 6.10.7.1.1-1	1	1	94122.752	14201.302	10623.554	-0.030	0.005	0.004	80697.673	1.190
168.100	2.008	59.995	120.458	289532.167	Equation 6.10.7.1.1-1	1	1	93771.152	14176.590	10605.067	-0.088	0.017	0.013	80395.222	3.870
172.750	2.302	59.995	138.080	289532.167	Equation 6.10.7.1.1-1	1	1	85371.372	12926.552	9669.953	-0.040	0.012	0.009	73284.831	4.493
183.900	3.110	59.995	186.563	289532.167	Equation 6.10.7.1.1-1	1	1	63070.908	9582.153	7168.112	-0.009	0.011	0.008	55635.522	9.026
184.100	2.178	59.995	130.685	231116.686	Equation 6.10.7.1.1-1	1	1	62644.633	9541.892	7137.994	-0.024	0.019	0.015	55431.216	15.687
184.250	2.351	59.995	141.066	231116.686	Equation 6.10.7.1.1-1	1	1	62323.188	9499.240	7106.087	-0.005	0.013	0.010	55177.686	10.492
188.600	3.039	59.995	182.301	231116.686	Equation 6.10.7.1.1-1	1	1	52696.107	8051.705	6023.230	0.000	0.013	0.010	46102.903	8.498
197.125	5.623	59.995	337.376	231116.686	Equation 6.10.7.1.1-1	1	1	32522.247	5001.394	3741.388	0.048	0.016	0.012	29165.726	4.582

Date:	8/2/2021	Span3-5ft-EB.lbsx	
Time:	2:26 PM	Bentley LEAP Bridge Steel [AASHTO LRFD 8th Ed. with 2017 Interims]	v21.00.00.28

FLEXURE RATING

POI Loc. (ft)	Moment Rating Factor	Vehicle Tonnage (Tons)	Rating Tonnage (Tons)	Moment/Stress Resistance (kip-in / ksi)	Controlling Equation	φc	φs	DC1 (kip-in / ksi)	DC2 (kip-in / ksi)	DW (kip-ft / ksi)	flDC1 (ksi)	flDC2 (ksi)	flDW (ksi)	LL (kip-in / ksi)	flLL (ksi)
209.400	149.611	59.995	8975.917	231116.686	Equation 6.10.7.1.1-1	1	1	381.266	59.996	44.881	0.126	0.024	0.018	361.279	1.074
209.500	999.990	59.995	59994.402	231116.686	Equation 6.10.7.1.1-1	1	1	0.000	0.000	0.000	0.000	0.000	0.000	0.000	0.000
209.600	106.671	59.995	6399.741	48.881	Equation 6.10.8.1.1-1 lateral torsion buckling	1	1	-0.002	0.000	0.000	0.101	0.019	0.014	-0.129	0.987
210.000	431.579	59.995	25892.587	48.881	Equation 6.10.8.1.1-1 lateral torsion buckling	1	1	0.000	0.000	0.000	0.009	0.001	0.001	-0.004	0.328

SHEAR RATING

POI Loc. (ft)	Shear Rating Factor	Vehicle Tonnage (Tons)	Rating Tonnage (Tons)	Shear Resistance (kip)	Controlling Equation	φc	φs	DC1 (kip)	DC2 (kip)	DW (kip)	LL (kip)
0.000	22.450	59.995	1346.893	1685.625	Equation 6.10.9.1-1	1.000	1.000	-0.554	0.133	0.099	-75.069
0.400	12.046	59.995	722.715	1685.625	Equation 6.10.9.1-1	1.000	1.000	-1.756	0.030	0.023	140.071
0.500	6.060	59.995	363.572	1685.625	Equation 6.10.9.1-1	1.000	1.000	231.633	36.130	27.028	229.509

SHEAR RATING

POI Loc. (ft)	Shear Rating Factor	Vehicle Tonnage (Tons)	Rating Tonnage (Tons)	Shear Resistance (kip)	Controlling Equation	φc	φs	DC1 (kip)	DC2 (kip)	DW (kip)	LL (kip)
0.600	6.060	59.995	363.582	1685.625	Equation 6.10.9.1-1	1.000	1.000	231.604	36.124	27.023	229.509
11.500	2.232	59.995	133.893	761.178	Equation 6.10.9.1-1	1.000	1.000	208.870	32.362	24.209	222.130
21.400	2.631	59.995	157.850	761.178	Equation 6.10.9.1-1	1.000	1.000	188.898	28.939	21.648	198.283
23.000	2.655	59.995	159.294	761.178	Equation 6.10.9.1-1	1.000	1.000	185.894	28.387	21.236	197.980
25.900	4.596	59.995	275.735	1124.840	Equation 6.10.9.1-1	1.000	1.000	179.202	27.392	20.491	195.335
26.100	4.611	59.995	276.636	1124.840	Equation 6.10.9.1-1	1.000	1.000	178.469	27.320	20.437	194.885
34.500	2.655	59.995	159.281	678.990	Equation 6.10.9.1-1	1.000	1.000	161.151	24.414	18.264	178.975
41.900	2.972	59.995	178.292	678.990	Equation 6.10.9.1-1	1.000	1.000	146.326	21.853	16.348	166.386
42.100	4.342	59.995	260.499	904.929	Equation 6.10.9.1-1	1.000	1.000	145.514	21.780	16.293	166.131
42.300	4.358	59.995	261.487	904.929	Equation 6.10.9.1-1	1.000	1.000	145.126	21.711	16.242	165.619
46.000	3.544	59.995	212.631	747.024	Equation 6.10.9.1-1	1.000	1.000	137.224	20.431	15.284	161.981

SHEAR RATING

POI Loc. (ft)	Shear Rating Factor	Vehicle Tonnage (Tons)	Rating Tonnage (Tons)	Shear Resistance (kip)	Controlling Equation	φc	φs	DC1 (kip)	DC2 (kip)	DW (kip)	LL (kip)
57.500	3.991	59.995	239.416	747.024	Equation 6.10.9.1-1	1.000	1.000	110.091	16.453	12.308	152.402
63.200	4.327	59.995	259.577	747.024	Equation 6.10.9.1-1	1.000	1.000	97.614	14.479	10.831	144.246
69.000	4.607	59.995	276.410	747.024	Equation 6.10.9.1-1	1.000	1.000	84.715	12.464	9.324	139.026
80.500	5.208	59.995	312.457	747.024	Equation 6.10.9.1-1	1.000	1.000	57.024	8.496	6.356	129.635
84.100	5.513	59.995	330.750	747.024	Equation 6.10.9.1-1	1.000	1.000	49.094	7.249	5.423	124.300
92.000	6.052	59.995	363.119	742.922	Equation 6.10.9.1-1	1.000	1.000	31.648	4.504	3.370	116.217
103.625	6.892	59.995	413.459	742.922	Equation 6.10.9.1-1	1.000	1.000	3.506	0.498	0.373	107.167
105.000	7.105	59.995	426.243	742.922	Equation 6.10.9.1-1	1.000	1.000	0.360	0.021	0.016	104.513
115.250	6.765	59.995	405.866	742.922	Equation 6.10.9.1-1	1.000	1.000	-25.509	-3.537	-2.646	-105.134
125.900	5.961	59.995	357.631	747.024	Equation 6.10.9.1-1	1.000	1.000	-48.536	-7.232	-5.410	-115.055
126.750	5.842	59.995	350.474	747.024	Equation 6.10.9.1-1	1.000	1.000	-50.658	-7.528	-5.632	-116.953

SHEAR RATING

POI Loc. (ft)	Shear Rating Factor	Vehicle Tonnage (Tons)	Rating Tonnage (Tons)	Shear Resistance (kip)	Controlling Equation	φc	φs	DC1 (kip)	DC2 (kip)	DW (kip)	LL (kip)
138.250	5.132	59.995	307.870	747.024	Equation 6.10.9.1-1	1.000	1.000	-78.608	-11.487	-8.593	-126.342
146.800	4.597	59.995	275.783	747.024	Equation 6.10.9.1-1	1.000	1.000	-97.088	-14.453	-10.812	-135.894
149.750	4.381	59.995	262.868	747.024	Equation 6.10.9.1-1	1.000	1.000	-103.757	-15.475	-11.576	-140.640
161.250	3.783	59.995	226.946	747.024	Equation 6.10.9.1-1	1.000	1.000	-131.201	-19.433	-14.537	-153.818
167.700	3.931	59.995	235.858	831.150	Equation 6.10.9.1-1	1.000	1.000	-144.963	-21.667	-16.208	-164.911
167.900	3.909	59.995	234.544	831.150	Equation 6.10.9.1-1	1.000	1.000	-145.351	-21.736	-16.260	-165.704
168.100	2.665	59.995	159.858	626.874	Equation 6.10.9.1-1	1.000	1.000	-146.173	-21.808	-16.314	-166.101
172.750	2.524	59.995	151.406	626.874	Equation 6.10.9.1-1	1.000	1.000	-155.484	-23.416	-17.516	-170.570
183.900	7.175	59.995	430.463	1557.297	Equation 6.10.9.1-1	1.000	1.000	-178.218	-27.274	-20.403	-185.562
184.100	7.164	59.995	429.816	1557.297	Equation 6.10.9.1-1	1.000	1.000	-178.862	-27.337	-20.450	-185.736
184.250	2.437	59.995	146.192	684.644	Equation 6.10.9.1-1	1.000	1.000	-180.597	-27.390	-20.489	-187.205

SHEAR RATING

POI Loc. (ft)	Shear Rating Factor	Vehicle Tonnage (Tons)	Rating Tonnage (Tons)	Shear Resistance (kip)	Controlling Equation	φc	φs	DC1 (kip)	DC2 (kip)	DW (kip)	LL (kip)
188.600	2.354	59.995	141.250	684.644	Equation 6.10.9.1-1	1.000	1.000	-189.042	-28.894	-21.614	-189.051
197.125	2.085	59.995	125.110	684.644	Equation 6.10.9.1-1	1.000	1.000	-206.075	-31.839	-23.818	-202.802
209.400	6.261	59.995	375.623	1685.625	Equation 6.10.9.1-1	1.000	1.000	-231.553	-36.076	-26.987	-222.174
209.500	6.261	59.995	375.613	1685.625	Equation 6.10.9.1-1	1.000	1.000	-231.582	-36.081	-26.991	-222.174
209.600	12.492	59.995	749.458	1685.625	Equation 6.10.9.1-1	1.000	1.000	1.744	0.022	0.017	-135.079
210.000	28.330	59.995	1699.679	1685.625	Equation 6.10.9.1-1	1.000	1.000	0.542	-0.118	-0.088	59.487

Design Inventory (Strength I) Design Inventory

FLEXURE RATING

POI Loc. (ft)	Moment Rating Factor	Vehicle Tonnage (Tons)	Rating Tonnage (Tons)	Moment/Stress Resistance (kip-in / ksi)	Controlling Equation	φc	φs	DC1 (kip-in / ksi)	DC2 (kip-in / ksi)	DW (kip-ft / ksi)	flDC1 (ksi)	flDC2 (ksi)	flDW (ksi)	LL (kip-in / ksi)	flLL (ksi)
0.000	358.547	---	---	48.881	Equation 6.10.8.1.1-1 lateral torsion buckling	1	1	0.000	0.000	0.000	0.007	0.002	0.002	-0.006	0.390

Date:	8/2/2021	Span3-5ft-EB.lbsx	
Time:	2:26 PM	Bentley LEAP Bridge Steel [AASHTO LRFD 8th Ed. with 2017 Interims]	v21.00.00.28

FLEXURE RATING

POI Loc. (ft)	Moment Rating Factor	Vehicle Tonnage (Tons)	Rating Tonnage (Tons)	Moment/Stress Resistance (kip-in / ksi)	Controlling Equation	φc	φs	DC1 (kip-in / ksi)	DC2 (kip-in / ksi)	DW (kip-ft / ksi)	flDC1 (ksi)	flDC2 (ksi)	flDW (ksi)	LL (kip-in / ksi)	flLL (ksi)
0.400	10.867	---	---	48.881	Equation 6.10.8.1.1-1 lateral torsion buckling	1	1	-0.003	0.001	0.001	0.090	0.019	0.014	-4.118	1.128
0.500	999.990	---	---	231116.686	Equation 6.10.7.1.1-1	1	1	0.000	0.000	0.000	0.000	0.000	0.000	0.000	0.000
0.600	6.904	---	---	48.881	Equation 6.10.8.1.1-1 lateral torsion buckling	1	1	0.165	0.011	0.008	0.099	0.021	0.016	-6.689	1.235
11.500	6.066	---	---	231116.686	Equation 6.10.7.1.1-1	1	1	29111.174	4461.911	3337.817	0.071	0.005	0.004	27055.336	4.898
21.400	2.693	---	---	231116.686	Equation 6.10.7.1.1-1	1	1	52707.459	8032.651	6008.977	0.046	-0.009	-0.007	51216.696	10.438
23.000	2.433	---	---	231116.686	Equation 6.10.7.1.1-1	1	1	56302.617	8573.282	6413.406	0.058	-0.011	-0.008	55169.310	11.333
25.900	2.005	---	---	231116.686	Equation 6.10.7.1.1-1	1	1	62626.686	9535.226	7133.007	0.033	-0.013	-0.010	62343.568	14.734
26.100	2.843	---	---	289532.167	Equation 6.10.7.1.1-1	1	1	63051.380	9573.853	7161.902	0.023	-0.007	-0.006	62847.068	8.364
34.500	2.242	---	---	289532.167	Equation 6.10.7.1.1-1	1	1	80156.692	12139.069	9080.861	-0.022	0.002	0.001	80452.234	2.740
41.900	1.723	---	---	289532.167	Equation 6.10.7.1.1-1	1	1	93788.650	14170.840	10600.765	-0.117	0.017	0.012	94379.329	3.913

Date:	8/2/2021	Span3-5ft-EB.lbsx	
Time:	2:26 PM	Bentley LEAP Bridge Steel [AASHTO LRFD 8th Ed. with 2017 Interims]	v21.00.00.28

FLEXURE RATING

POI Loc. (ft)	Moment Rating Factor	Vehicle Tonnage (Tons)	Rating Tonnage (Tons)	Moment/Stress Resistance (kip-in / ksi)	Controlling Equation	φc	φs	DC1 (kip-in / ksi)	DC2 (kip-in / ksi)	DW (kip-ft / ksi)	flDC1 (ksi)	flDC2 (ksi)	flDW (ksi)	LL (kip-in / ksi)	flLL (ksi)
42.100	2.738	---	---	384994.225	Equation 6.10.7.1.1-1	1	1	94140.671	14196.129	10619.683	-0.037	0.005	0.004	94739.558	1.211
42.300	2.723	---	---	384994.225	Equation 6.10.7.1.1-1	1	1	94488.789	14248.186	10658.626	-0.039	0.005	0.004	95023.373	1.257
46.000	2.440	---	---	384994.225	Equation 6.10.7.1.1-1	1	1	100752.648	15172.292	11349.921	-0.069	0.008	0.006	101351.040	2.155
57.500	1.933	---	---	384994.225	Equation 6.10.7.1.1-1	1	1	117620.034	17682.084	13227.419	-0.029	0.008	0.006	118348.440	2.049
63.200	1.767	---	---	384994.225	Equation 6.10.7.1.1-1	1	1	124694.542	18727.229	14009.259	-0.044	0.009	0.006	125169.890	1.864
69.000	1.608	---	---	384994.225	Equation 6.10.7.1.1-1	1	1	131015.009	19641.729	14693.367	-0.100	0.013	0.009	133041.720	1.816
80.500	1.414	---	---	384994.225	Equation 6.10.7.1.1-1	1	1	140559.728	21061.269	15755.281	-0.046	0.010	0.008	142737.420	2.144
84.100	1.372	---	---	384994.225	Equation 6.10.7.1.1-1	1	1	142834.639	21396.998	16006.430	-0.055	0.011	0.008	145060.962	2.172
92.000	1.304	---	---	384994.225	Equation 6.10.7.1.1-1	1	1	146633.678	21938.761	16411.705	-0.129	0.015	0.011	148990.590	2.261
103.625	1.266	---	---	384994.225	Equation 6.10.7.1.1-1	1	1	148837.690	22279.733	16666.778	-0.057	0.011	0.009	151116.630	2.470
105.000	1.267	---	---	384994.225	Equation 6.10.7.1.1-1	1	1	148862.976	22283.518	16669.608	-0.059	0.011	0.009	151023.187	2.455

Date:	8/2/2021	Span3-5ft-EB.lbsx	
Time:	2:26 PM	Bentley LEAP Bridge Steel [AASHTO LRFD 8th Ed. with 2017 Interims]	v21.00.00.28

FLEXURE RATING

POI Loc. (ft)	Moment Rating Factor	Vehicle Tonnage (Tons)	Rating Tonnage (Tons)	Moment/Stress Resistance (kip-in / ksi)	Controlling Equation	φc	φs	DC1 (kip-in / ksi)	DC2 (kip-in / ksi)	DW (kip-ft / ksi)	flDC1 (ksi)	flDC2 (ksi)	flDW (ksi)	LL (kip-in / ksi)	flLL (ksi)
115.250	1.289	---	---	384994.225	Equation 6.10.7.1.1-1	1	1	147518.705	22069.283	16509.346	-0.124	0.014	0.011	150242.400	2.110
125.900	1.360	---	---	384994.225	Equation 6.10.7.1.1-1	1	1	142824.416	21396.336	16005.935	-0.050	0.010	0.008	146084.785	2.381
126.750	1.368	---	---	384994.225	Equation 6.10.7.1.1-1	1	1	142322.609	21321.367	15949.854	-0.048	0.010	0.008	145608.330	2.391
138.250	1.526	---	---	384994.225	Equation 6.10.7.1.1-1	1	1	133655.751	20031.230	14984.742	-0.092	0.011	0.008	138028.170	1.909
146.800	1.724	---	---	384994.225	Equation 6.10.7.1.1-1	1	1	124676.689	18726.550	14008.750	-0.039	0.008	0.006	129183.963	1.475
149.750	1.810	---	---	384994.225	Equation 6.10.7.1.1-1	1	1	121134.280	18202.720	13616.890	-0.035	0.007	0.005	125725.530	1.286
161.250	2.261	---	---	384994.225	Equation 6.10.7.1.1-1	1	1	105141.024	15825.673	11838.696	-0.078	0.008	0.006	109680.900	0.916
167.700	2.590	---	---	384994.225	Equation 6.10.7.1.1-1	1	1	94470.731	14253.319	10662.466	-0.031	0.005	0.004	99688.848	1.446
167.900	2.601	---	---	384994.225	Equation 6.10.7.1.1-1	1	1	94122.752	14201.302	10623.554	-0.030	0.005	0.004	99328.656	1.482
168.100	1.628	---	---	289532.167	Equation 6.10.7.1.1-1	1	1	93771.152	14176.590	10605.067	-0.090	0.017	0.013	98958.510	4.908
172.750	1.851	---	---	289532.167	Equation 6.10.7.1.1-1	1	1	85371.372	12926.552	9669.953	-0.041	0.012	0.009	90171.191	6.346

Date:	8/2/2021	Span3-5ft-EB.lbsx	
Time:	2:26 PM	Bentley LEAP Bridge Steel [AASHTO LRFD 8th Ed. with 2017 Interims]	v21.00.00.28

FLEXURE RATING

POI Loc. (ft)	Moment Rating Factor	Vehicle Tonnage (Tons)	Rating Tonnage (Tons)	Moment/Stress Resistance (kip-in / ksi)	Controlling Equation	φc	φs	DC1 (kip-in / ksi)	DC2 (kip-in / ksi)	DW (kip-ft / ksi)	flDC1 (ksi)	flDC2 (ksi)	flDW (ksi)	LL (kip-in / ksi)	flLL (ksi)
183.900	2.497	---	---	289532.167	Equation 6.10.7.1.1-1	1	1	63070.908	9582.153	7168.112	-0.010	0.011	0.008	67696.272	12.461
184.100	1.744	---	---	231116.686	Equation 6.10.7.1.1-1	1	1	62644.633	9541.892	7137.994	-0.025	0.020	0.015	67415.922	21.608
184.250	1.899	---	---	231116.686	Equation 6.10.7.1.1-1	1	1	62323.188	9499.240	7106.087	-0.005	0.013	0.010	67106.550	14.318
188.600	2.443	---	---	231116.686	Equation 6.10.7.1.1-1	1	1	52696.107	8051.705	6023.230	0.000	0.013	0.010	56360.879	11.603
197.125	4.548	---	---	231116.686	Equation 6.10.7.1.1-1	1	1	32522.247	5001.394	3741.388	0.048	0.016	0.012	35436.413	6.290
209.400	114.921	---	---	231116.686	Equation 6.10.7.1.1-1	1	1	381.266	59.996	44.881	0.127	0.024	0.018	426.906	1.438
209.500	999.990	---	---	231116.686	Equation 6.10.7.1.1-1	1	1	0.000	0.000	0.000	0.000	0.000	0.000	0.000	0.000
209.600	89.402	---	---	48.881	Equation 6.10.8.1.1-1 lateral torsion buckling	1	1	-0.002	0.000	0.000	0.102	0.019	0.014	-0.102	1.333
210.000	325.009	---	---	48.881	Equation 6.10.8.1.1-1 lateral torsion buckling	1	1	0.000	0.000	0.000	0.009	0.001	0.001	-0.004	0.440

SHEAR RATING

POI Loc. (ft)	Shear Rating Factor	Vehicle Tonnage (Tons)	Rating Tonnage (Tons)	Shear Resistance (kip)	Controlling Equation	φc	φs	DC1 (kip)	DC2 (kip)	DW (kip)	LL (kip)
0.000	27.459	---	---	1685.625	Equation 6.10.9.1-1	1.000	1.000	-0.554	0.133	0.099	-61.375
0.400	9.968	---	---	1685.625	Equation 6.10.9.1-1	1.000	1.000	-1.756	0.030	0.023	169.274
0.500	5.011	---	---	1685.625	Equation 6.10.9.1-1	1.000	1.000	231.633	36.130	27.028	277.533
0.600	5.012	---	---	1685.625	Equation 6.10.9.1-1	1.000	1.000	231.604	36.124	27.023	277.533
11.500	1.901	---	---	761.178	Equation 6.10.9.1-1	1.000	1.000	208.870	32.362	24.209	260.801
21.400	2.229	---	---	761.178	Equation 6.10.9.1-1	1.000	1.000	188.898	28.939	21.648	234.073
23.000	2.256	---	---	761.178	Equation 6.10.9.1-1	1.000	1.000	185.894	28.387	21.236	233.014
25.900	3.983	---	---	1124.840	Equation 6.10.9.1-1	1.000	1.000	179.202	27.392	20.491	225.385
26.100	3.995	---	---	1124.840	Equation 6.10.9.1-1	1.000	1.000	178.469	27.320	20.437	224.929
34.500	2.288	---	---	678.990	Equation 6.10.9.1-1	1.000	1.000	161.151	24.414	18.264	207.632
41.900	2.549	---	---	678.990	Equation 6.10.9.1-1	1.000	1.000	146.326	21.853	16.348	193.974
42.100	3.725	---	---	904.929	Equation 6.10.9.1-1	1.000	1.000	145.514	21.780	16.293	193.647

SHEAR RATING

POI Loc. (ft)	Shear Rating Factor	Vehicle Tonnage (Tons)	Rating Tonnage (Tons)	Shear Resistance (kip)	Controlling Equation	φc	φs	DC1 (kip)	DC2 (kip)	DW (kip)	LL (kip)
42.300	3.740	---	---	904.929	Equation 6.10.9.1-1	1.000	1.000	145.126	21.711	16.242	192.995
46.000	3.063	---	---	747.024	Equation 6.10.9.1-1	1.000	1.000	137.224	20.431	15.284	187.451
57.500	3.560	---	---	747.024	Equation 6.10.9.1-1	1.000	1.000	110.091	16.453	12.308	170.851
63.200	3.878	---	---	747.024	Equation 6.10.9.1-1	1.000	1.000	97.614	14.479	10.831	160.924
69.000	4.177	---	---	747.024	Equation 6.10.9.1-1	1.000	1.000	84.715	12.464	9.324	153.344
80.500	4.903	---	---	747.024	Equation 6.10.9.1-1	1.000	1.000	57.024	8.496	6.356	137.702
84.100	5.215	---	---	747.024	Equation 6.10.9.1-1	1.000	1.000	49.094	7.249	5.423	131.389
92.000	5.761	---	---	742.922	Equation 6.10.9.1-1	1.000	1.000	31.648	4.504	3.370	122.095
103.625	6.752	---	---	742.922	Equation 6.10.9.1-1	1.000	1.000	3.506	0.498	0.373	109.388
105.000	6.944	---	---	742.922	Equation 6.10.9.1-1	1.000	1.000	0.360	0.021	0.016	106.931
115.250	6.539	---	---	742.922	Equation 6.10.9.1-1	1.000	1.000	-25.509	-3.537	-2.646	-108.771

SHEAR RATING

POI Loc. (ft)	Shear Rating Factor	Vehicle Tonnage (Tons)	Rating Tonnage (Tons)	Shear Resistance (kip)	Controlling Equation	φc	φs	DC1 (kip)	DC2 (kip)	DW (kip)	LL (kip)
125.900	5.693	---	---	747.024	Equation 6.10.9.1-1	1.000	1.000	-48.536	-7.232	-5.410	-120.477
126.750	5.580	---	---	747.024	Equation 6.10.9.1-1	1.000	1.000	-50.658	-7.528	-5.632	-122.439
138.250	4.667	---	---	747.024	Equation 6.10.9.1-1	1.000	1.000	-78.608	-11.487	-8.593	-138.932
146.800	4.110	---	---	747.024	Equation 6.10.9.1-1	1.000	1.000	-97.088	-14.453	-10.812	-151.993
149.750	3.900	---	---	747.024	Equation 6.10.9.1-1	1.000	1.000	-103.757	-15.475	-11.576	-157.994
161.250	3.271	---	---	747.024	Equation 6.10.9.1-1	1.000	1.000	-131.201	-19.433	-14.537	-177.900
167.700	3.396	---	---	831.150	Equation 6.10.9.1-1	1.000	1.000	-144.963	-21.667	-16.208	-190.900
167.900	3.377	---	---	831.150	Equation 6.10.9.1-1	1.000	1.000	-145.351	-21.736	-16.260	-191.808
168.100	2.302	---	---	626.874	Equation 6.10.9.1-1	1.000	1.000	-146.173	-21.808	-16.314	-192.262
172.750	2.170	---	---	626.874	Equation 6.10.9.1-1	1.000	1.000	-155.484	-23.416	-17.516	-198.326
183.900	6.117	---	---	1557.297	Equation 6.10.9.1-1	1.000	1.000	-178.218	-27.274	-20.403	-217.666

Date:	8/2/2021	Span3-5ft-EB.lbsx	
Time:	2:26 PM	Bentley LEAP Bridge Steel [AASHTO LRFD 8th Ed. with 2017 Interims]	v21.00.00.28

SHEAR RATING

POI Loc. (ft)	Shear Rating Factor	Vehicle Tonnage (Tons)	Rating Tonnage (Tons)	Shear Resistance (kip)	Controlling Equation	φc	φs	DC1 (kip)	DC2 (kip)	DW (kip)	LL (kip)
184.100	6.108	---	---	1557.297	Equation 6.10.9.1-1	1.000	1.000	-178.862	-27.337	-20.450	-217.856
184.250	2.092	---	---	684.644	Equation 6.10.9.1-1	1.000	1.000	-180.597	-27.390	-20.489	-218.019
188.600	1.999	---	---	684.644	Equation 6.10.9.1-1	1.000	1.000	-189.042	-28.894	-21.614	-222.640
197.125	1.761	---	---	684.644	Equation 6.10.9.1-1	1.000	1.000	-206.075	-31.839	-23.818	-240.090
209.400	5.249	---	---	1685.625	Equation 6.10.9.1-1	1.000	1.000	-231.553	-36.076	-26.987	-265.011
209.500	5.249	---	---	1685.625	Equation 6.10.9.1-1	1.000	1.000	-231.582	-36.081	-26.991	-265.011
209.600	10.490	---	---	1685.625	Equation 6.10.9.1-1	1.000	1.000	1.744	0.022	0.017	-160.865
210.000	36.028	---	---	1685.625	Equation 6.10.9.1-1	1.000	1.000	0.542	-0.118	-0.088	46.777

Design Operating (Strength I) **Design Operating**

FLEXURE RATING

POI Loc. (ft)	Moment Rating Factor	Vehicle Tonnage (Tons)	Rating Tonnage (Tons)	Moment/Stress Resistance (kip-in / ksi)	Controlling Equation	φc	φs	DC1 (kip-in / ksi)	DC2 (kip-in / ksi)	DW (kip-ft / ksi)	flDC1 (ksi)	flDC2 (ksi)	flDW (ksi)	LL (kip-in / ksi)	flLL (ksi)

Date:	8/2/2021	Span3-5ft-EB.lbsx	
Time:	2:26 PM	Bentley LEAP Bridge Steel [AASHTO LRFD 8th Ed. with 2017 Interims]	v21.00.00.28

FLEXURE RATING

POI Loc. (ft)	Moment Rating Factor	Vehicle Tonnage (Tons)	Rating Tonnage (Tons)	Moment/Stress Resistance (kip-in / ksi)	Controlling Equation	φc	φs	DC1 (kip-in / ksi)	DC2 (kip-in / ksi)	DW (kip-ft / ksi)	flDC1 (ksi)	flDC2 (ksi)	flDW (ksi)	LL (kip-in / ksi)	flLL (ksi)
0.000	466.884	---	---	48.881	Equation 6.10.8.1.1-1 lateral torsion buckling	1	1	0.000	0.000	0.000	0.007	0.002	0.001	-0.005	0.300
0.400	14.093	---	---	48.881	Equation 6.10.8.1.1-1 lateral torsion buckling	1	1	-0.003	0.001	0.001	0.090	0.019	0.014	-3.177	0.866
0.500	999.990	---	---	231116.686	Equation 6.10.7.1.1-1	1	1	0.000	0.000	0.000	0.000	0.000	0.000	0.000	0.000
0.600	8.952	---	---	48.881	Equation 6.10.8.1.1-1 lateral torsion buckling	1	1	0.165	0.011	0.008	0.099	0.021	0.016	-5.160	0.948
11.500	7.867	---	---	231116.686	Equation 6.10.7.1.1-1	1	1	29111.174	4461.911	3337.817	0.071	0.005	0.004	20871.259	3.767
21.400	3.493	---	---	231116.686	Equation 6.10.7.1.1-1	1	1	52707.459	8032.651	6008.977	0.046	-0.009	-0.007	39510.022	8.028
23.000	3.155	---	---	231116.686	Equation 6.10.7.1.1-1	1	1	56302.617	8573.282	6413.406	0.057	-0.011	-0.008	42559.182	8.716
25.900	2.605	---	---	231116.686	Equation 6.10.7.1.1-1	1	1	62626.686	9535.226	7133.007	0.033	-0.013	-0.010	48093.610	11.208
26.100	3.693	---	---	289532.167	Equation 6.10.7.1.1-1	1	1	63051.380	9573.853	7161.902	0.023	-0.007	-0.005	48482.024	6.351

Date:	8/2/2021	Span3-5ft-EB.lbsx	
Time:	2:26 PM	Bentley LEAP Bridge Steel [AASHTO LRFD 8th Ed. with 2017 Interims]	v21.00.00.28

FLEXURE RATING

POI Loc. (ft)	Moment Rating Factor	Vehicle Tonnage (Tons)	Rating Tonnage (Tons)	Moment/Stress Resistance (kip-in / ksi)	Controlling Equation	φc	φs	DC1 (kip-in / ksi)	DC2 (kip-in / ksi)	DW (kip-ft / ksi)	flDC1 (ksi)	flDC2 (ksi)	flDW (ksi)	LL (kip-in / ksi)	flLL (ksi)
34.500	2.909	---	---	289532.167	Equation 6.10.7.1.1-1	1	1	80156.692	12139.069	9080.861	-0.022	0.002	0.001	62063.152	2.081
41.900	2.236	---	---	289532.167	Equation 6.10.7.1.1-1	1	1	93788.650	14170.840	10600.765	-0.115	0.016	0.012	72806.911	2.953
42.100	3.550	---	---	384994.225	Equation 6.10.7.1.1-1	1	1	94140.671	14196.129	10619.683	-0.037	0.005	0.004	73084.802	0.927
42.300	3.531	---	---	384994.225	Equation 6.10.7.1.1-1	1	1	94488.789	14248.186	10658.626	-0.038	0.005	0.004	73303.745	0.962
46.000	3.165	---	---	384994.225	Equation 6.10.7.1.1-1	1	1	100752.648	15172.292	11349.921	-0.068	0.008	0.006	78185.088	1.638
57.500	2.507	---	---	384994.225	Equation 6.10.7.1.1-1	1	1	117620.034	17682.084	13227.419	-0.029	0.008	0.006	91297.368	1.558
63.200	2.292	---	---	384994.225	Equation 6.10.7.1.1-1	1	1	124694.542	18727.229	14009.259	-0.044	0.009	0.006	96559.630	1.417
69.000	2.085	---	---	384994.225	Equation 6.10.7.1.1-1	1	1	131015.009	19641.729	14693.367	-0.098	0.012	0.009	102632.184	1.373
80.500	1.834	---	---	384994.225	Equation 6.10.7.1.1-1	1	1	140559.728	21061.269	15755.281	-0.045	0.010	0.007	110111.724	1.621
84.100	1.780	---	---	384994.225	Equation 6.10.7.1.1-1	1	1	142834.639	21396.998	16006.430	-0.054	0.010	0.008	111904.171	1.642
92.000	1.691	---	---	384994.225	Equation 6.10.7.1.1-1	1	1	146633.678	21938.761	16411.705	-0.126	0.015	0.011	114935.598	1.704

Date:	8/2/2021	Span3-5ft-EB.lbsx	
Time:	2:26 PM	Bentley LEAP Bridge Steel [AASHTO LRFD 8th Ed. with 2017 Interims]	v21.00.00.28

FLEXURE RATING

POI Loc. (ft)	Moment Rating Factor	Vehicle Tonnage (Tons)	Rating Tonnage (Tons)	Moment/Stress Resistance (kip-in / ksi)	Controlling Equation	φc	φs	DC1 (kip-in / ksi)	DC2 (kip-in / ksi)	DW (kip-ft / ksi)	flDC1 (ksi)	flDC2 (ksi)	flDW (ksi)	LL (kip-in / ksi)	flLL (ksi)
103.625	1.642	---	---	384994.225	Equation 6.10.7.1.1-1	1	1	148837.690	22279.733	16666.778	-0.056	0.011	0.008	116575.686	1.862
105.000	1.643	---	---	384994.225	Equation 6.10.7.1.1-1	1	1	148862.976	22283.518	16669.608	-0.057	0.011	0.008	116503.601	1.851
115.250	1.671	---	---	384994.225	Equation 6.10.7.1.1-1	1	1	147518.705	22069.283	16509.346	-0.121	0.014	0.010	115901.280	1.595
125.900	1.763	---	---	384994.225	Equation 6.10.7.1.1-1	1	1	142824.416	21396.336	16005.935	-0.049	0.010	0.007	112693.977	1.799
126.750	1.774	---	---	384994.225	Equation 6.10.7.1.1-1	1	1	142322.609	21321.367	15949.854	-0.047	0.010	0.007	112326.426	1.807
138.250	1.979	---	---	384994.225	Equation 6.10.7.1.1-1	1	1	133655.751	20031.230	14984.742	-0.090	0.011	0.008	106478.874	1.449
146.800	2.235	---	---	384994.225	Equation 6.10.7.1.1-1	1	1	124676.689	18726.550	14008.750	-0.039	0.008	0.006	99656.200	1.120
149.750	2.347	---	---	384994.225	Equation 6.10.7.1.1-1	1	1	121134.280	18202.720	13616.890	-0.034	0.007	0.005	96988.266	0.977
161.250	2.932	---	---	384994.225	Equation 6.10.7.1.1-1	1	1	105141.024	15825.673	11838.696	-0.078	0.008	0.006	84610.980	0.700
167.700	3.358	---	---	384994.225	Equation 6.10.7.1.1-1	1	1	94470.731	14253.319	10662.466	-0.031	0.005	0.004	76902.826	1.105
167.900	3.373	---	---	384994.225	Equation 6.10.7.1.1-1	1	1	94122.752	14201.302	10623.554	-0.030	0.005	0.004	76624.963	1.133

Date:	8/2/2021	Span3-5ft-EB.lbsx	
Time:	2:26 PM	Bentley LEAP Bridge Steel [AASHTO LRFD 8th Ed. with 2017 Interims]	v21.00.00.28

FLEXURE RATING

POI Loc. (ft)	Moment Rating Factor	Vehicle Tonnage (Tons)	Rating Tonnage (Tons)	Moment/Stress Resistance (kip-in / ksi)	Controlling Equation	φc	φs	DC1 (kip-in / ksi)	DC2 (kip-in / ksi)	DW (kip-ft / ksi)	flDC1 (ksi)	flDC2 (ksi)	flDW (ksi)	LL (kip-in / ksi)	flLL (ksi)
168.100	2.114	---	---	289532.167	Equation 6.10.7.1.1-1	1	1	93771.152	14176.590	10605.067	-0.088	0.017	0.013	76339.422	3.700
172.750	2.403	---	---	289532.167	Equation 6.10.7.1.1-1	1	1	85371.372	12926.552	9669.953	-0.040	0.012	0.009	69560.633	4.801
183.900	3.249	---	---	289532.167	Equation 6.10.7.1.1-1	1	1	63070.908	9582.153	7168.112	-0.009	0.011	0.008	52222.838	9.430
184.100	2.269	---	---	231116.686	Equation 6.10.7.1.1-1	1	1	62644.633	9541.892	7137.994	-0.024	0.019	0.015	52006.568	16.390
184.250	2.464	---	---	231116.686	Equation 6.10.7.1.1-1	1	1	62323.188	9499.240	7106.087	-0.005	0.013	0.010	51767.910	10.981
188.600	3.170	---	---	231116.686	Equation 6.10.7.1.1-1	1	1	52696.107	8051.705	6023.230	0.000	0.013	0.010	43478.392	8.898
197.125	5.901	---	---	231116.686	Equation 6.10.7.1.1-1	1	1	32522.247	5001.394	3741.388	0.048	0.016	0.012	27336.661	4.824
209.400	149.643	---	---	231116.686	Equation 6.10.7.1.1-1	1	1	381.266	59.996	44.881	0.126	0.024	0.018	329.328	1.103
209.500	999.990	---	---	231116.686	Equation 6.10.7.1.1-1	1	1	0.000	0.000	0.000	0.000	0.000	0.000	0.000	0.000
209.600	116.634	---	---	48.881	Equation 6.10.8.1.1-1 lateral torsion buckling	1	1	-0.002	0.000	0.000	0.101	0.019	0.014	-0.079	1.020

Date:	8/2/2021	Span3-5ft-EB.lbsx	
Time:	2:26 PM	Bentley LEAP Bridge Steel [AASHTO LRFD 8th Ed. with 2017 Interims]	v21.00.00.28

FLEXURE RATING

POI Loc. (ft)	Moment Rating Factor	Vehicle Tonnage (Tons)	Rating Tonnage (Tons)	Moment/Stress Resistance (kip-in / ksi)	Controlling Equation	φc	φs	DC1 (kip-in / ksi)	DC2 (kip-in / ksi)	DW (kip-ft / ksi)	flDC1 (ksi)	flDC2 (ksi)	flDW (ksi)	LL (kip-in / ksi)	flLL (ksi)
210.000	424.540	---	---	48.881	Equation 6.10.8.1.1-1 lateral torsion buckling	1	1	0.000	0.000	0.000	0.009	0.001	0.001	-0.003	0.336

SHEAR RATING

POI Loc. (ft)	Shear Rating Factor	Vehicle Tonnage (Tons)	Rating Tonnage (Tons)	Shear Resistance (kip)	Controlling Equation	φc	φs	DC1 (kip)	DC2 (kip)	DW (kip)	LL (kip)
0.000	35.595	---	---	1685.625	Equation 6.10.9.1-1	1.000	1.000	-0.554	0.133	0.099	-47.347
0.400	12.922	---	---	1685.625	Equation 6.10.9.1-1	1.000	1.000	-1.756	0.030	0.023	130.582
0.500	6.496	---	---	1685.625	Equation 6.10.9.1-1	1.000	1.000	231.633	36.130	27.028	214.097
0.600	6.496	---	---	1685.625	Equation 6.10.9.1-1	1.000	1.000	231.604	36.124	27.023	214.097
11.500	2.464	---	---	761.178	Equation 6.10.9.1-1	1.000	1.000	208.870	32.362	24.209	201.189
21.400	2.889	---	---	761.178	Equation 6.10.9.1-1	1.000	1.000	188.898	28.939	21.648	180.571
23.000	2.924	---	---	761.178	Equation 6.10.9.1-1	1.000	1.000	185.894	28.387	21.236	179.754

SHEAR RATING

POI Loc. (ft)	Shear Rating Factor	Vehicle Tonnage (Tons)	Rating Tonnage (Tons)	Shear Resistance (kip)	Controlling Equation	φc	φs	DC1 (kip)	DC2 (kip)	DW (kip)	LL (kip)
25.900	5.163	---	---	1124.840	Equation 6.10.9.1-1	1.000	1.000	179.202	27.392	20.491	173.869
26.100	5.179	---	---	1124.840	Equation 6.10.9.1-1	1.000	1.000	178.469	27.320	20.437	173.517
34.500	2.967	---	---	678.990	Equation 6.10.9.1-1	1.000	1.000	161.151	24.414	18.264	160.173
41.900	3.304	---	---	678.990	Equation 6.10.9.1-1	1.000	1.000	146.326	21.853	16.348	149.637
42.100	4.829	---	---	904.929	Equation 6.10.9.1-1	1.000	1.000	145.514	21.780	16.293	149.385
42.300	4.848	---	---	904.929	Equation 6.10.9.1-1	1.000	1.000	145.126	21.711	16.242	148.882
46.000	3.970	---	---	747.024	Equation 6.10.9.1-1	1.000	1.000	137.224	20.431	15.284	144.605
57.500	4.614	---	---	747.024	Equation 6.10.9.1-1	1.000	1.000	110.091	16.453	12.308	131.799
63.200	5.027	---	---	747.024	Equation 6.10.9.1-1	1.000	1.000	97.614	14.479	10.831	124.141
69.000	5.415	---	---	747.024	Equation 6.10.9.1-1	1.000	1.000	84.715	12.464	9.324	118.294
80.500	6.356	---	---	747.024	Equation 6.10.9.1-1	1.000	1.000	57.024	8.496	6.356	106.227

SHEAR RATING

POI Loc. (ft)	Shear Rating Factor	Vehicle Tonnage (Tons)	Rating Tonnage (Tons)	Shear Resistance (kip)	Controlling Equation	φc	φs	DC1 (kip)	DC2 (kip)	DW (kip)	LL (kip)
84.100	6.761	---	---	747.024	Equation 6.10.9.1-1	1.000	1.000	49.094	7.249	5.423	101.358
92.000	7.468	---	---	742.922	Equation 6.10.9.1-1	1.000	1.000	31.648	4.504	3.370	94.187
103.625	8.752	---	---	742.922	Equation 6.10.9.1-1	1.000	1.000	3.506	0.498	0.373	84.385
105.000	9.001	---	---	742.922	Equation 6.10.9.1-1	1.000	1.000	0.360	0.021	0.016	82.489
115.250	8.476	---	---	742.922	Equation 6.10.9.1-1	1.000	1.000	-25.509	-3.537	-2.646	-83.909
125.900	7.380	---	---	747.024	Equation 6.10.9.1-1	1.000	1.000	-48.536	-7.232	-5.410	-92.939
126.750	7.233	---	---	747.024	Equation 6.10.9.1-1	1.000	1.000	-50.658	-7.528	-5.632	-94.453
138.250	6.049	---	---	747.024	Equation 6.10.9.1-1	1.000	1.000	-78.608	-11.487	-8.593	-107.176
146.800	5.328	---	---	747.024	Equation 6.10.9.1-1	1.000	1.000	-97.088	-14.453	-10.812	-117.252
149.750	5.056	---	---	747.024	Equation 6.10.9.1-1	1.000	1.000	-103.757	-15.475	-11.576	-121.881
161.250	4.240	---	---	747.024	Equation 6.10.9.1-1	1.000	1.000	-131.201	-19.433	-14.537	-137.237

SHEAR RATING

POI Loc. (ft)	Shear Rating Factor	Vehicle Tonnage (Tons)	Rating Tonnage (Tons)	Shear Resistance (kip)	Controlling Equation	φc	φs	DC1 (kip)	DC2 (kip)	DW (kip)	LL (kip)
167.700	4.402	---	---	831.150	Equation 6.10.9.1-1	1.000	1.000	-144.963	-21.667	-16.208	-147.265
167.900	4.378	---	---	831.150	Equation 6.10.9.1-1	1.000	1.000	-145.351	-21.736	-16.260	-147.966
168.100	2.984	---	---	626.874	Equation 6.10.9.1-1	1.000	1.000	-146.173	-21.808	-16.314	-148.316
172.750	2.814	---	---	626.874	Equation 6.10.9.1-1	1.000	1.000	-155.484	-23.416	-17.516	-152.994
183.900	7.929	---	---	1557.297	Equation 6.10.9.1-1	1.000	1.000	-178.218	-27.274	-20.403	-167.914
184.100	7.918	---	---	1557.297	Equation 6.10.9.1-1	1.000	1.000	-178.862	-27.337	-20.450	-168.060
184.250	2.712	---	---	684.644	Equation 6.10.9.1-1	1.000	1.000	-180.597	-27.390	-20.489	-168.186
188.600	2.592	---	---	684.644	Equation 6.10.9.1-1	1.000	1.000	-189.042	-28.894	-21.614	-171.751
197.125	2.283	---	---	684.644	Equation 6.10.9.1-1	1.000	1.000	-206.075	-31.839	-23.818	-185.212
209.400	6.804	---	---	1685.625	Equation 6.10.9.1-1	1.000	1.000	-231.553	-36.076	-26.987	-204.437
209.500	6.804	---	---	1685.625	Equation 6.10.9.1-1	1.000	1.000	-231.582	-36.081	-26.991	-204.437

Date:	8/2/2021	Span3-5ft-EB.lbsx	
Time:	2:26 PM	Bentley LEAP Bridge Steel [AASHTO LRFD 8th Ed. with 2017 Interims]	v21.00.00.28

SHEAR RATING

POI Loc. (ft)	Shear Rating Factor	Vehicle Tonnage (Tons)	Rating Tonnage (Tons)	Shear Resistance (kip)	Controlling Equation	φc	φs	DC1 (kip)	DC2 (kip)	DW (kip)	LL (kip)
209.600	13.598	---	---	1685.625	Equation 6.10.9.1-1	1.000	1.000	1.744	0.022	0.017	-124.096
210.000	46.703	---	---	1685.625	Equation 6.10.9.1-1	1.000	1.000	0.542	-0.118	-0.088	36.085

SUMMARY REPORT

Load Rating Combination	Controlling POI Loc. (ft)	Based on	Controlling Equation	Rating Factor	Vehicle Tonnage (Tons)	Rating Tonnage (Tons)
Design Inventory	103.625	Flexure	Equation 6.10.7.1.1-1	1.266	---	---
Design Operating	103.625	Flexure	Equation 6.10.7.1.1-1	1.642	---	---
Permit	103.625	Flexure	Equation 6.10.7.1.1-1	1.575	59.995	94.463

Group01 Member 02

Design Inventory (Strength I) Permit

FLEXURE RATING

POI Loc. (ft)	Moment Rating Factor	Vehicle Tonnage (Tons)	Rating Tonnage (Tons)	Moment/Stress Resistance (kip-in / ksi)	Controlling Equation	φc	φs	DC1 (kip-in / ksi)	DC2 (kip-in / ksi)	DW (kip-ft / ksi)	flDC1 (ksi)	flDC2 (ksi)	flDW (ksi)	LL (kip-in / ksi)	flLL (ksi)

Date:	8/2/2021	Span3-5ft-EB.lbsx	
Time:	2:26 PM	Bentley LEAP Bridge Steel [AASHTO LRFD 8th Ed. with 2017 Interims]	v21.00.00.28

FLEXURE RATING

POI Loc. (ft)	Moment Rating Factor	Vehicle Tonnage (Tons)	Rating Tonnage (Tons)	Moment/Stress Resistance (kip-in / ksi)	Controlling Equation	φc	φs	DC1 (kip-in / ksi)	DC2 (kip-in / ksi)	DW (kip-ft / ksi)	flDC1 (ksi)	flDC2 (ksi)	flDW (ksi)	LL (kip-in / ksi)	flLL (ksi)
0.000	423.403	59.995	25402.050	48.881	Equation 6.10.8.1.1-1 lateral torsion buckling	1	1	-0.001	0.000	0.000	-0.012	-0.001	-0.001	-0.024	0.273
0.400	21.855	59.995	1311.182	48.881	Equation 6.10.8.1.1-1 lateral torsion buckling	1	1	-0.009	-0.002	-0.001	-0.103	-0.011	-0.008	-2.009	0.676
0.500	999.990	59.995	59994.402	232634.188	Equation 6.10.7.1.1-1	1	1	0.000	0.000	0.000	0.000	0.000	0.000	0.000	0.000
0.600	14.018	59.995	841.026	48.881	Equation 6.10.8.1.1-1 lateral torsion buckling	1	1	0.155	0.035	0.026	-0.118	-0.012	-0.009	-3.253	0.739
11.500	7.834	59.995	469.972	232634.188	Equation 6.10.7.1.1-1	1	1	29300.594	4577.887	3424.575	-0.048	-0.011	-0.008	20903.054	3.972
21.400	3.848	59.995	230.844	232634.188	Equation 6.10.7.1.1-1	1	1	52937.937	8232.541	6158.508	0.027	-0.009	-0.007	35279.518	8.168
23.000	3.494	59.995	209.602	232634.188	Equation 6.10.7.1.1-1	1	1	56526.550	8784.320	6571.277	0.049	-0.009	-0.007	37776.132	8.855
25.900	2.934	59.995	176.025	232634.188	Equation 6.10.7.1.1-1	1	1	62839.636	9750.966	7294.395	0.046	-0.007	-0.005	41949.490	11.104
26.100	4.176	59.995	250.565	291248.988	Equation 6.10.7.1.1-1	1	1	63263.640	9833.199	7355.911	0.029	-0.004	-0.003	42231.132	6.286

Date:	8/2/2021	Span3-5ft-EB.lbsx	
Time:	2:26 PM	Bentley LEAP Bridge Steel [AASHTO LRFD 8th Ed. with 2017 Interims]	v21.00.00.28

FLEXURE RATING

POI Loc. (ft)	Moment Rating Factor	Vehicle Tonnage (Tons)	Rating Tonnage (Tons)	Moment/Stress Resistance (kip-in / ksi)	Controlling Equation	φc	φs	DC1 (kip-in / ksi)	DC2 (kip-in / ksi)	DW (kip-ft / ksi)	flDC1 (ksi)	flDC2 (ksi)	flDW (ksi)	LL (kip-in / ksi)	flLL (ksi)
34.500	3.431	59.995	205.847	291248.988	Equation 6.10.7.1.1-1	1	1	80265.527	12443.723	9308.763	0.004	0.006	0.005	52798.493	1.861
41.900	2.627	59.995	157.622	291248.988	Equation 6.10.7.1.1-1	1	1	93721.604	14490.811	10840.126	-0.069	0.019	0.014	61076.258	3.636
42.100	4.344	59.995	260.632	395608.291	Equation 6.10.7.1.1-1	1	1	94068.019	14560.459	10892.227	-0.024	0.006	0.004	61266.618	1.149
42.300	4.322	59.995	259.308	395608.291	Equation 6.10.7.1.1-1	1	1	94410.218	14612.065	10930.832	-0.025	0.006	0.004	61416.306	1.187
46.000	3.892	59.995	233.489	395608.291	Equation 6.10.7.1.1-1	1	1	100555.401	15545.117	11628.820	-0.055	0.008	0.006	65043.000	1.912
57.500	3.115	59.995	186.912	395608.291	Equation 6.10.7.1.1-1	1	1	117254.989	18086.830	13530.196	-0.019	0.008	0.006	76032.594	1.631
63.200	2.870	59.995	172.164	395608.291	Equation 6.10.7.1.1-1	1	1	124175.039	19141.582	14319.223	-0.041	0.009	0.006	80136.968	1.441
69.000	2.655	59.995	159.309	395608.291	Equation 6.10.7.1.1-1	1	1	130291.422	20085.668	15025.465	-0.109	0.011	0.008	84108.132	1.319
80.500	2.345	59.995	140.689	395608.291	Equation 6.10.7.1.1-1	1	1	139770.381	21532.814	16108.030	-0.044	0.010	0.008	89998.776	1.599
84.100	2.287	59.995	137.179	395608.291	Equation 6.10.7.1.1-1	1	1	141985.214	21870.715	16360.802	-0.053	0.011	0.008	91033.581	1.661
92.000	2.182	59.995	130.920	395608.291	Equation 6.10.7.1.1-1	1	1	145588.051	22430.308	16779.419	-0.135	0.013	0.010	93064.140	1.830

Date:	8/2/2021	Span3-5ft-EB.lbsx	
Time:	2:26 PM	Bentley LEAP Bridge Steel [AASHTO LRFD 8th Ed. with 2017 Interims]	v21.00.00.28

FLEXURE RATING

POI Loc. (ft)	Moment Rating Factor	Vehicle Tonnage (Tons)	Rating Tonnage (Tons)	Moment/Stress Resistance (kip-in / ksi)	Controlling Equation	φc	φs	DC1 (kip-in / ksi)	DC2 (kip-in / ksi)	DW (kip-ft / ksi)	flDC1 (ksi)	flDC2 (ksi)	flDW (ksi)	LL (kip-in / ksi)	flLL (ksi)
103.625	2.118	59.995	127.084	395608.291	Equation 6.10.7.1.1-1	1	1	147878.949	22774.462	17036.870	-0.053	0.012	0.009	94588.236	1.884
105.000	2.121	59.995	127.231	395608.291	Equation 6.10.7.1.1-1	1	1	147901.666	22777.898	17039.438	-0.054	0.012	0.009	94480.281	1.874
115.250	2.164	59.995	129.830	395608.291	Equation 6.10.7.1.1-1	1	1	146451.724	22561.356	16877.449	-0.130	0.012	0.009	93771.756	1.619
125.900	2.278	59.995	136.653	395608.291	Equation 6.10.7.1.1-1	1	1	141982.967	21868.724	16359.313	-0.047	0.011	0.008	91053.214	1.847
126.750	2.289	59.995	137.312	395608.291	Equation 6.10.7.1.1-1	1	1	141492.254	21793.951	16303.377	-0.045	0.010	0.008	90845.874	1.860
138.250	2.562	59.995	153.727	395608.291	Equation 6.10.7.1.1-1	1	1	132871.473	20477.197	15318.356	-0.099	0.010	0.008	85404.456	1.627
146.800	2.882	59.995	172.908	395608.291	Equation 6.10.7.1.1-1	1	1	124168.910	19136.829	14315.669	-0.035	0.008	0.006	80278.572	1.186
149.750	3.014	59.995	180.831	395608.291	Equation 6.10.7.1.1-1	1	1	120697.931	18606.812	13919.180	-0.028	0.008	0.006	78442.506	1.017
161.250	3.724	59.995	223.407	395608.291	Equation 6.10.7.1.1-1	1	1	104861.908	16192.239	12112.910	-0.076	0.007	0.005	68707.926	0.885
167.700	4.303	59.995	258.180	395608.291	Equation 6.10.7.1.1-1	1	1	94398.325	14599.662	10921.554	-0.022	0.006	0.005	62057.365	1.009
167.900	4.321	59.995	259.211	395608.291	Equation 6.10.7.1.1-1	1	1	94055.856	14547.831	10882.781	-0.021	0.006	0.005	61862.408	1.030

Date:	8/2/2021	Span3-5ft-EB.lbsx	
Time:	2:26 PM	Bentley LEAP Bridge Steel [AASHTO LRFD 8th Ed. with 2017 Interims]	v21.00.00.28

FLEXURE RATING

POI Loc. (ft)	Moment Rating Factor	Vehicle Tonnage (Tons)	Rating Tonnage (Tons)	Moment/Stress Resistance (kip-in / ksi)	Controlling Equation	φc	φs	DC1 (kip-in / ksi)	DC2 (kip-in / ksi)	DW (kip-ft / ksi)	flDC1 (ksi)	flDC2 (ksi)	flDW (ksi)	LL (kip-in / ksi)	flLL (ksi)
168.100	2.622	59.995	157.283	291248.988	Equation 6.10.7.1.1-1	1	1	93709.465	14477.091	10829.862	-0.058	0.020	0.015	61642.490	3.304
172.750	2.969	59.995	178.151	291248.988	Equation 6.10.7.1.1-1	1	1	85419.497	13216.037	9886.507	-0.010	0.017	0.012	56367.961	4.137
183.900	3.876	59.995	232.536	291248.988	Equation 6.10.7.1.1-1	1	1	63254.661	9814.054	7341.590	0.017	0.016	0.012	42513.247	9.059
184.100	2.693	59.995	161.589	232634.188	Equation 6.10.7.1.1-1	1	1	62828.224	9731.546	7279.868	0.021	0.028	0.021	42349.262	15.780
184.250	2.951	59.995	177.057	232634.188	Equation 6.10.7.1.1-1	1	1	62507.580	9676.574	7238.744	0.024	0.019	0.014	42133.446	10.721
188.600	3.739	59.995	224.304	232634.188	Equation 6.10.7.1.1-1	1	1	52912.262	8202.354	6135.927	-0.013	0.013	0.010	36033.627	8.720
197.125	6.782	59.995	406.863	232634.188	Equation 6.10.7.1.1-1	1	1	32720.208	5076.020	3797.213	-0.065	0.001	0.001	23316.836	4.833
209.400	189.990	59.995	11398.448	232634.188	Equation 6.10.7.1.1-1	1	1	367.167	60.930	45.580	-0.139	-0.017	-0.013	321.369	0.816
209.500	999.990	59.995	59994.402	232634.188	Equation 6.10.7.1.1-1	1	1	0.000	0.000	0.000	0.000	0.000	0.000	0.000	0.000
209.600	134.228	59.995	8053.001	48.881	Equation 6.10.8.1.1-1 lateral torsion buckling	1	1	-0.009	0.000	0.000	-0.109	-0.013	-0.010	-0.107	0.769

Date:	8/2/2021	Span3-5ft-EB.lbsx	
Time:	2:26 PM	Bentley LEAP Bridge Steel [AASHTO LRFD 8th Ed. with 2017 Interims]	v21.00.00.28

FLEXURE RATING

POI Loc. (ft)	Moment Rating Factor	Vehicle Tonnage (Tons)	Rating Tonnage (Tons)	Moment/Stress Resistance (kip-in / ksi)	Controlling Equation	φc	φs	DC1 (kip-in / ksi)	DC2 (kip-in / ksi)	DW (kip-ft / ksi)	flDC1 (ksi)	flDC2 (ksi)	flDW (ksi)	LL (kip-in / ksi)	flLL (ksi)
210.000	394.543	59.995	23670.587	48.881	Equation 6.10.8.1.1-1 lateral torsion buckling	1	1	-0.001	0.000	0.000	-0.011	-0.002	-0.001	-0.024	0.301

SHEAR RATING

POI Loc. (ft)	Shear Rating Factor	Vehicle Tonnage (Tons)	Rating Tonnage (Tons)	Shear Resistance (kip)	Controlling Equation	φc	φs	DC1 (kip)	DC2 (kip)	DW (kip)	LL (kip)
0.000	39.623	59.995	2377.167	1685.625	Equation 6.10.9.1-1	1.000	1.000	-3.407	-0.162	-0.121	-42.449
0.400	15.269	59.995	916.053	1685.625	Equation 6.10.9.1-1	1.000	1.000	-4.803	-0.308	-0.230	110.746
0.500	7.572	59.995	454.275	1685.625	Equation 6.10.9.1-1	1.000	1.000	233.921	35.853	26.820	183.446
0.600	7.572	59.995	454.288	1685.625	Equation 6.10.9.1-1	1.000	1.000	233.890	35.847	26.816	183.446
11.500	2.924	59.995	175.400	761.178	Equation 6.10.9.1-1	1.000	1.000	209.835	32.095	24.009	169.395
21.400	3.408	59.995	204.441	761.178	Equation 6.10.9.1-1	1.000	1.000	188.663	28.694	21.465	153.290
23.000	3.421	59.995	205.242	761.178	Equation 6.10.9.1-1	1.000	1.000	185.651	28.143	21.053	153.854

SHEAR RATING

POI Loc. (ft)	Shear Rating Factor	Vehicle Tonnage (Tons)	Rating Tonnage (Tons)	Shear Resistance (kip)	Controlling Equation	φc	φs	DC1 (kip)	DC2 (kip)	DW (kip)	LL (kip)
25.900	5.854	59.995	351.199	1124.840	Equation 6.10.9.1-1	1.000	1.000	178.724	27.146	20.307	153.518
26.100	5.869	59.995	352.121	1124.840	Equation 6.10.9.1-1	1.000	1.000	177.966	27.080	20.258	153.265
34.500	3.421	59.995	205.242	678.990	Equation 6.10.9.1-1	1.000	1.000	159.630	24.195	18.100	139.453
41.900	3.826	59.995	229.527	678.990	Equation 6.10.9.1-1	1.000	1.000	143.907	21.655	16.200	129.968
42.100	5.581	59.995	334.849	904.929	Equation 6.10.9.1-1	1.000	1.000	143.071	21.590	16.151	129.740
42.300	5.602	59.995	336.086	904.929	Equation 6.10.9.1-1	1.000	1.000	142.659	21.521	16.099	129.358
46.000	4.576	59.995	274.534	747.024	Equation 6.10.9.1-1	1.000	1.000	135.338	20.251	15.149	125.938
57.500	5.275	59.995	316.462	747.024	Equation 6.10.9.1-1	1.000	1.000	108.191	16.309	12.200	115.706
63.200	5.802	59.995	348.070	747.024	Equation 6.10.9.1-1	1.000	1.000	95.022	14.353	10.737	108.057
69.000	6.038	59.995	362.242	747.024	Equation 6.10.9.1-1	1.000	1.000	82.930	12.369	9.253	106.407
80.500	7.039	59.995	422.334	747.024	Equation 6.10.9.1-1	1.000	1.000	55.864	8.413	6.293	96.094

SHEAR RATING

POI Loc. (ft)	Shear Rating Factor	Vehicle Tonnage (Tons)	Rating Tonnage (Tons)	Shear Resistance (kip)	Controlling Equation	φc	φs	DC1 (kip)	DC2 (kip)	DW (kip)	LL (kip)
84.100	7.444	59.995	446.622	747.024	Equation 6.10.9.1-1	1.000	1.000	47.497	7.178	5.370	92.282
92.000	7.944	59.995	476.579	742.922	Equation 6.10.9.1-1	1.000	1.000	30.767	4.477	3.349	88.666
103.625	9.290	59.995	557.354	742.922	Equation 6.10.9.1-1	1.000	1.000	3.438	0.470	0.351	79.511
105.000	9.606	59.995	576.321	742.922	Equation 6.10.9.1-1	1.000	1.000	-0.019	-0.030	-0.022	77.345
115.250	8.499	59.995	509.894	742.922	Equation 6.10.9.1-1	1.000	1.000	-24.770	-3.567	-2.668	-83.765
125.900	7.582	59.995	454.896	747.024	Equation 6.10.9.1-1	1.000	1.000	-47.407	-7.213	-5.396	-90.608
126.750	7.427	59.995	445.587	747.024	Equation 6.10.9.1-1	1.000	1.000	-49.632	-7.503	-5.613	-92.133
138.250	6.364	59.995	381.815	747.024	Equation 6.10.9.1-1	1.000	1.000	-76.924	-11.473	-8.582	-102.142
146.800	5.960	59.995	357.557	747.024	Equation 6.10.9.1-1	1.000	1.000	-94.899	-14.401	-10.773	-105.197
149.750	5.613	59.995	336.756	747.024	Equation 6.10.9.1-1	1.000	1.000	-101.926	-15.412	-11.530	-110.128
161.250	4.876	59.995	292.531	747.024	Equation 6.10.9.1-1	1.000	1.000	-129.253	-19.378	-14.496	-119.751

SHEAR RATING

POI Loc. (ft)	Shear Rating Factor	Vehicle Tonnage (Tons)	Rating Tonnage (Tons)	Shear Resistance (kip)	Controlling Equation	φc	φs	DC1 (kip)	DC2 (kip)	DW (kip)	LL (kip)
167.700	5.368	59.995	322.064	831.150	Equation 6.10.9.1-1	1.000	1.000	-142.669	-21.590	-16.151	-121.222
167.900	5.346	59.995	320.751	831.150	Equation 6.10.9.1-1	1.000	1.000	-143.081	-21.659	-16.202	-121.618
168.100	3.651	59.995	219.054	626.874	Equation 6.10.9.1-1	1.000	1.000	-143.927	-21.725	-16.252	-121.870
172.750	3.399	59.995	203.948	626.874	Equation 6.10.9.1-1	1.000	1.000	-153.802	-23.323	-17.447	-127.170
183.900	9.598	59.995	575.814	1557.297	Equation 6.10.9.1-1	1.000	1.000	-177.887	-27.151	-20.311	-138.778
184.100	9.586	59.995	575.135	1557.297	Equation 6.10.9.1-1	1.000	1.000	-178.556	-27.226	-20.367	-138.858
184.250	3.253	59.995	195.180	684.644	Equation 6.10.9.1-1	1.000	1.000	-180.030	-27.273	-20.402	-140.455
188.600	3.093	59.995	185.589	684.644	Equation 6.10.9.1-1	1.000	1.000	-188.715	-28.768	-21.520	-144.061
197.125	2.721	59.995	163.249	684.644	Equation 6.10.9.1-1	1.000	1.000	-206.781	-31.699	-23.713	-155.253
209.400	7.923	59.995	475.341	1685.625	Equation 6.10.9.1-1	1.000	1.000	-233.748	-35.925	-26.875	-175.322
209.500	7.923	59.995	475.327	1685.625	Equation 6.10.9.1-1	1.000	1.000	-233.779	-35.931	-26.879	-175.322

Date:	8/2/2021	Span3-5ft-EB.lbsx	
Time:	2:26 PM	Bentley LEAP Bridge Steel [AASHTO LRFD 8th Ed. with 2017 Interims]	v21.00.00.28

SHEAR RATING

POI Loc. (ft)	Shear Rating Factor	Vehicle Tonnage (Tons)	Rating Tonnage (Tons)	Shear Resistance (kip)	Controlling Equation	φc	φs	DC1 (kip)	DC2 (kip)	DW (kip)	LL (kip)
209.600	15.917	59.995	954.962	1685.625	Equation 6.10.9.1-1	1.000	1.000	4.802	0.283	0.212	-106.231
210.000	30.487	59.995	1829.055	1685.625	Equation 6.10.9.1-1	1.000	1.000	3.406	0.147	0.110	55.170

Design Inventory (Strength I) **Design Inventory**

FLEXURE RATING

POI Loc. (ft)	Moment Rating Factor	Vehicle Tonnage (Tons)	Rating Tonnage (Tons)	Moment/Stress Resistance (kip-in / ksi)	Controlling Equation	φc	φs	DC1 (kip-in / ksi)	DC2 (kip-in / ksi)	DW (kip-ft / ksi)	flDC1 (ksi)	flDC2 (ksi)	flDW (ksi)	LL (kip-in / ksi)	flLL (ksi)
0.000	344.782	---	---	48.881	Equation 6.10.8.1.1-1 lateral torsion buckling	1	1	-0.001	0.000	0.000	-0.012	-0.001	-0.001	-0.020	0.367
0.400	19.052	---	---	48.881	Equation 6.10.8.1.1-1 lateral torsion buckling	1	1	-0.009	-0.002	-0.001	-0.103	-0.011	-0.008	-2.259	0.913
0.500	999.990	---	---	232634.188	Equation 6.10.7.1.1-1	1	1	0.000	0.000	0.000	0.000	0.000	0.000	0.000	0.000

Date:	8/2/2021	Span3-5ft-EB.lbsx	
Time:	2:26 PM	Bentley LEAP Bridge Steel [AASHTO LRFD 8th Ed. with 2017 Interims]	v21.00.00.28

FLEXURE RATING

POI Loc. (ft)	Moment Rating Factor	Vehicle Tonnage (Tons)	Rating Tonnage (Tons)	Moment/Stress Resistance (kip-in / ksi)	Controlling Equation	φc	φs	DC1 (kip-in / ksi)	DC2 (kip-in / ksi)	DW (kip-ft / ksi)	flDC1 (ksi)	flDC2 (ksi)	flDW (ksi)	LL (kip-in / ksi)	flLL (ksi)
0.600	12.267	---	---	48.881	Equation 6.10.8.1.1-1 lateral torsion buckling	1	1	0.155	0.035	0.026	-0.119	-0.012	-0.009	-3.666	0.996
11.500	6.517	---	---	232634.188	Equation 6.10.7.1.1-1	1	1	29300.594	4577.887	3424.575	-0.048	-0.011	-0.008	24566.472	5.329
21.400	3.154	---	---	232634.188	Equation 6.10.7.1.1-1	1	1	52937.937	8232.541	6158.508	0.027	-0.009	-0.007	42111.580	10.943
23.000	2.865	---	---	232634.188	Equation 6.10.7.1.1-1	1	1	56526.550	8784.320	6571.277	0.049	-0.009	-0.007	45063.900	11.867
25.900	2.395	---	---	232634.188	Equation 6.10.7.1.1-1	1	1	62839.636	9750.966	7294.395	0.046	-0.007	-0.005	50150.492	14.962
26.100	3.422	---	---	291248.988	Equation 6.10.7.1.1-1	1	1	63263.640	9833.199	7355.911	0.029	-0.004	-0.003	50494.382	8.466
34.500	2.838	---	---	291248.988	Equation 6.10.7.1.1-1	1	1	80265.527	12443.723	9308.763	0.004	0.006	0.005	63511.022	2.504
41.900	2.169	---	---	291248.988	Equation 6.10.7.1.1-1	1	1	93721.604	14490.811	10840.126	-0.070	0.019	0.014	73864.219	4.499
42.100	3.588	---	---	395608.291	Equation 6.10.7.1.1-1	1	1	94068.019	14560.459	10892.227	-0.024	0.006	0.004	74115.153	1.422
42.300	3.568	---	---	395608.291	Equation 6.10.7.1.1-1	1	1	94410.218	14612.065	10930.832	-0.025	0.006	0.004	74327.379	1.474

Date:	8/2/2021	Span3-5ft-EB.lbsx	
Time:	2:26 PM	Bentley LEAP Bridge Steel [AASHTO LRFD 8th Ed. with 2017 Interims]	v21.00.00.28

FLEXURE RATING

POI Loc. (ft)	Moment Rating Factor	Vehicle Tonnage (Tons)	Rating Tonnage (Tons)	Moment/Stress Resistance (kip-in / ksi)	Controlling Equation	φc	φs	DC1 (kip-in / ksi)	DC2 (kip-in / ksi)	DW (kip-ft / ksi)	flDC1 (ksi)	flDC2 (ksi)	flDW (ksi)	LL (kip-in / ksi)	flLL (ksi)
46.000	3.196	---	---	395608.291	Equation 6.10.7.1.1-1	1	1	100555.401	15545.117	11628.820	-0.055	0.008	0.006	78916.320	2.472
57.500	2.568	---	---	395608.291	Equation 6.10.7.1.1-1	1	1	117254.989	18086.830	13530.196	-0.019	0.008	0.006	92102.850	2.050
63.200	2.364	---	---	395608.291	Equation 6.10.7.1.1-1	1	1	124175.039	19141.582	14319.223	-0.041	0.009	0.006	97283.988	1.745
69.000	2.189	---	---	395608.291	Equation 6.10.7.1.1-1	1	1	130291.422	20085.668	15025.465	-0.110	0.011	0.008	102194.820	1.523
80.500	1.929	---	---	395608.291	Equation 6.10.7.1.1-1	1	1	139770.381	21532.814	16108.030	-0.044	0.010	0.008	109401.810	1.932
84.100	1.878	---	---	395608.291	Equation 6.10.7.1.1-1	1	1	141985.214	21870.715	16360.802	-0.054	0.011	0.008	110854.464	2.007
92.000	1.790	---	---	395608.291	Equation 6.10.7.1.1-1	1	1	145588.051	22430.308	16779.419	-0.136	0.013	0.010	113561.910	2.180
103.625	1.737	---	---	395608.291	Equation 6.10.7.1.1-1	1	1	147878.949	22774.462	17036.870	-0.053	0.012	0.009	115326.960	2.313
105.000	1.738	---	---	395608.291	Equation 6.10.7.1.1-1	1	1	147901.666	22777.898	17039.438	-0.055	0.012	0.009	115243.800	2.300
115.250	1.775	---	---	395608.291	Equation 6.10.7.1.1-1	1	1	146451.724	22561.356	16877.449	-0.131	0.013	0.009	114413.040	1.928
125.900	1.869	---	---	395608.291	Equation 6.10.7.1.1-1	1	1	141982.967	21868.724	16359.313	-0.047	0.011	0.008	110941.499	2.272

Date:	8/2/2021	Span3-5ft-EB.lbsx	
Time:	2:26 PM	Bentley LEAP Bridge Steel [AASHTO LRFD 8th Ed. with 2017 Interims]	v21.00.00.28

FLEXURE RATING

POI Loc. (ft)	Moment Rating Factor	Vehicle Tonnage (Tons)	Rating Tonnage (Tons)	Moment/Stress Resistance (kip-in / ksi)	Controlling Equation	φc	φs	DC1 (kip-in / ksi)	DC2 (kip-in / ksi)	DW (kip-ft / ksi)	flDC1 (ksi)	flDC2 (ksi)	flDW (ksi)	LL (kip-in / ksi)	flLL (ksi)
126.750	1.878	---	---	395608.291	Equation 6.10.7.1.1-1	1	1	141492.254	21793.951	16303.377	-0.046	0.011	0.008	110648.790	2.288
138.250	2.103	---	---	395608.291	Equation 6.10.7.1.1-1	1	1	132871.473	20477.197	15318.356	-0.100	0.010	0.008	104082.510	1.971
146.800	2.376	---	---	395608.291	Equation 6.10.7.1.1-1	1	1	124168.910	19136.829	14315.669	-0.035	0.008	0.006	97530.189	1.368
149.750	2.491	---	---	395608.291	Equation 6.10.7.1.1-1	1	1	120697.931	18606.812	13919.180	-0.029	0.008	0.006	95116.350	1.136
161.250	3.083	---	---	395608.291	Equation 6.10.7.1.1-1	1	1	104861.908	16192.239	12112.910	-0.076	0.007	0.005	83153.490	0.986
167.700	3.562	---	---	395608.291	Equation 6.10.7.1.1-1	1	1	94398.325	14599.662	10921.554	-0.022	0.006	0.005	74982.759	1.216
167.900	3.576	---	---	395608.291	Equation 6.10.7.1.1-1	1	1	94055.856	14547.831	10882.781	-0.021	0.006	0.005	74735.413	1.252
168.100	2.168	---	---	291248.988	Equation 6.10.7.1.1-1	1	1	93709.465	14477.091	10829.862	-0.059	0.020	0.015	74463.270	4.066
172.750	2.433	---	---	291248.988	Equation 6.10.7.1.1-1	1	1	85419.497	13216.037	9886.507	-0.010	0.017	0.012	67949.884	5.737
183.900	3.143	---	---	291248.988	Equation 6.10.7.1.1-1	1	1	63254.661	9814.054	7341.590	0.017	0.016	0.012	50911.266	12.323
184.100	2.180	---	---	232634.188	Equation 6.10.7.1.1-1	1	1	62828.224	9731.546	7279.868	0.021	0.029	0.021	50541.960	21.467

Date:	8/2/2021	Span3-5ft-EB.lbsx	
Time:	2:26 PM	Bentley LEAP Bridge Steel [AASHTO LRFD 8th Ed. with 2017 Interims]	v21.00.00.28

FLEXURE RATING

POI Loc. (ft)	Moment Rating Factor	Vehicle Tonnage (Tons)	Rating Tonnage (Tons)	Moment/Stress Resistance (kip-in / ksi)	Controlling Equation	φc	φs	DC1 (kip-in / ksi)	DC2 (kip-in / ksi)	DW (kip-ft / ksi)	flDC1 (ksi)	flDC2 (ksi)	flDW (ksi)	LL (kip-in / ksi)	flLL (ksi)
184.250	2.413	---	---	232634.188	Equation 6.10.7.1.1-1	1	1	62507.580	9676.574	7238.744	0.024	0.019	0.014	50256.990	14.499
188.600	3.069	---	---	232634.188	Equation 6.10.7.1.1-1	1	1	52912.262	8202.354	6135.927	-0.013	0.013	0.010	42793.511	11.792
197.125	5.652	---	---	232634.188	Equation 6.10.7.1.1-1	1	1	32720.208	5076.020	3797.213	-0.065	0.001	0.001	27227.469	6.548
209.400	150.116	---	---	232634.188	Equation 6.10.7.1.1-1	1	1	367.167	60.930	45.580	-0.139	-0.017	-0.013	363.952	1.072
209.500	999.990	---	---	232634.188	Equation 6.10.7.1.1-1	1	1	0.000	0.000	0.000	0.000	0.000	0.000	0.000	0.000
209.600	120.297	---	---	48.881	Equation 6.10.8.1.1-1 lateral torsion buckling	1	1	-0.009	0.000	0.000	-0.109	-0.013	-0.010	-0.086	0.961
210.000	319.853	---	---	48.881	Equation 6.10.8.1.1-1 lateral torsion buckling	1	1	-0.001	0.000	0.000	-0.011	-0.002	-0.001	-0.019	0.401

SHEAR RATING

POI Loc. (ft)	Shear Rating Factor	Vehicle Tonnage (Tons)	Rating Tonnage (Tons)	Shear Resistance (kip)	Controlling Equation	φc	φs	DC1 (kip)	DC2 (kip)	DW (kip)	LL (kip)

SHEAR RATING

POI Loc. (ft)	Shear Rating Factor	Vehicle Tonnage (Tons)	Rating Tonnage (Tons)	Shear Resistance (kip)	Controlling Equation	φc	φs	DC1 (kip)	DC2 (kip)	DW (kip)	LL (kip)
0.000	50.346	---	---	1685.625	Equation 6.10.9.1-1	1.000	1.000	-3.407	-0.162	-0.121	-33.408
0.400	12.994	---	---	1685.625	Equation 6.10.9.1-1	1.000	1.000	-4.803	-0.308	-0.230	130.134
0.500	6.441	---	---	1685.625	Equation 6.10.9.1-1	1.000	1.000	233.921	35.853	26.820	215.646
0.600	6.441	---	---	1685.625	Equation 6.10.9.1-1	1.000	1.000	233.890	35.847	26.816	215.646
11.500	2.508	---	---	761.178	Equation 6.10.9.1-1	1.000	1.000	209.835	32.095	24.009	197.452
21.400	2.980	---	---	761.178	Equation 6.10.9.1-1	1.000	1.000	188.663	28.694	21.465	175.289
23.000	3.002	---	---	761.178	Equation 6.10.9.1-1	1.000	1.000	185.651	28.143	21.053	175.331
25.900	5.130	---	---	1124.840	Equation 6.10.9.1-1	1.000	1.000	178.724	27.146	20.307	175.182
26.100	5.145	---	---	1124.840	Equation 6.10.9.1-1	1.000	1.000	177.966	27.080	20.258	174.843
34.500	3.031	---	---	678.990	Equation 6.10.9.1-1	1.000	1.000	159.630	24.195	18.100	157.405
41.900	3.401	---	---	678.990	Equation 6.10.9.1-1	1.000	1.000	143.907	21.655	16.200	146.213

SHEAR RATING

POI Loc. (ft)	Shear Rating Factor	Vehicle Tonnage (Tons)	Rating Tonnage (Tons)	Shear Resistance (kip)	Controlling Equation	φc	φs	DC1 (kip)	DC2 (kip)	DW (kip)	LL (kip)
42.100	4.962	---	---	904.929	Equation 6.10.9.1-1	1.000	1.000	143.071	21.590	16.151	145.938
42.300	4.983	---	---	904.929	Equation 6.10.9.1-1	1.000	1.000	142.659	21.521	16.099	145.426
46.000	4.085	---	---	747.024	Equation 6.10.9.1-1	1.000	1.000	135.338	20.251	15.149	141.077
57.500	4.800	---	---	747.024	Equation 6.10.9.1-1	1.000	1.000	108.191	16.309	12.200	127.151
63.200	5.358	---	---	747.024	Equation 6.10.9.1-1	1.000	1.000	95.022	14.353	10.737	117.007
69.000	5.594	---	---	747.024	Equation 6.10.9.1-1	1.000	1.000	82.930	12.369	9.253	114.859
80.500	6.554	---	---	747.024	Equation 6.10.9.1-1	1.000	1.000	55.864	8.413	6.293	103.206
84.100	6.980	---	---	747.024	Equation 6.10.9.1-1	1.000	1.000	47.497	7.178	5.370	98.424
92.000	7.536	---	---	742.922	Equation 6.10.9.1-1	1.000	1.000	30.767	4.477	3.349	93.463
103.625	8.877	---	---	742.922	Equation 6.10.9.1-1	1.000	1.000	3.438	0.470	0.351	83.208
105.000	9.253	---	---	742.922	Equation 6.10.9.1-1	1.000	1.000	-0.019	-0.030	-0.022	80.300

SHEAR RATING

POI Loc. (ft)	Shear Rating Factor	Vehicle Tonnage (Tons)	Rating Tonnage (Tons)	Shear Resistance (kip)	Controlling Equation	φc	φs	DC1 (kip)	DC2 (kip)	DW (kip)	LL (kip)
115.250	8.080	---	---	742.922	Equation 6.10.9.1-1	1.000	1.000	-24.770	-3.567	-2.668	-88.109
125.900	7.126	---	---	747.024	Equation 6.10.9.1-1	1.000	1.000	-47.407	-7.213	-5.396	-96.405
126.750	6.952	---	---	747.024	Equation 6.10.9.1-1	1.000	1.000	-49.632	-7.503	-5.613	-98.434
138.250	5.928	---	---	747.024	Equation 6.10.9.1-1	1.000	1.000	-76.924	-11.473	-8.582	-109.655
146.800	5.455	---	---	747.024	Equation 6.10.9.1-1	1.000	1.000	-94.899	-14.401	-10.773	-114.922
149.750	5.119	---	---	747.024	Equation 6.10.9.1-1	1.000	1.000	-101.926	-15.412	-11.530	-120.754
161.250	4.407	---	---	747.024	Equation 6.10.9.1-1	1.000	1.000	-129.253	-19.378	-14.496	-132.493
167.700	4.709	---	---	831.150	Equation 6.10.9.1-1	1.000	1.000	-142.669	-21.590	-16.151	-138.188
167.900	4.689	---	---	831.150	Equation 6.10.9.1-1	1.000	1.000	-143.081	-21.659	-16.202	-138.662
168.100	3.203	---	---	626.874	Equation 6.10.9.1-1	1.000	1.000	-143.927	-21.725	-16.252	-138.936
172.750	2.990	---	---	626.874	Equation 6.10.9.1-1	1.000	1.000	-153.802	-23.323	-17.447	-144.572

SHEAR RATING

POI Loc. (ft)	Shear Rating Factor	Vehicle Tonnage (Tons)	Rating Tonnage (Tons)	Shear Resistance (kip)	Controlling Equation	φc	φs	DC1 (kip)	DC2 (kip)	DW (kip)	LL (kip)
183.900	8.428	---	---	1557.297	Equation 6.10.9.1-1	1.000	1.000	-177.887	-27.151	-20.311	-158.042
184.100	8.415	---	---	1557.297	Equation 6.10.9.1-1	1.000	1.000	-178.556	-27.226	-20.367	-158.180
184.250	2.847	---	---	684.644	Equation 6.10.9.1-1	1.000	1.000	-180.030	-27.273	-20.402	-160.473
188.600	2.706	---	---	684.644	Equation 6.10.9.1-1	1.000	1.000	-188.715	-28.768	-21.520	-164.662
197.125	2.366	---	---	684.644	Equation 6.10.9.1-1	1.000	1.000	-206.781	-31.699	-23.713	-178.525
209.400	6.827	---	---	1685.625	Equation 6.10.9.1-1	1.000	1.000	-233.748	-35.925	-26.875	-203.481
209.500	6.826	---	---	1685.625	Equation 6.10.9.1-1	1.000	1.000	-233.779	-35.931	-26.879	-203.481
209.600	13.718	---	---	1685.625	Equation 6.10.9.1-1	1.000	1.000	4.802	0.283	0.212	-123.260
210.000	38.310	---	---	1685.625	Equation 6.10.9.1-1	1.000	1.000	3.406	0.147	0.110	43.904

Design Operating (Strength I) **Design Operating**

FLEXURE RATING

Date:	8/2/2021	Span3-5ft-EB.lbsx	
Time:	2:26 PM	Bentley LEAP Bridge Steel [AASHTO LRFD 8th Ed. with 2017 Interims]	v21.00.00.28

POI Loc. (ft)	Moment Rating Factor	Vehicle Tonnage (Tons)	Rating Tonnage (Tons)	Moment/Stress Resistance (kip-in / ksi)	Controlling Equation	φc	φs	DC1 (kip-in / ksi)	DC2 (kip-in / ksi)	DW (kip-ft / ksi)	flDC1 (ksi)	flDC2 (ksi)	flDW (ksi)	LL (kip-in / ksi)	flLL (ksi)
0.000	448.330	---	---	48.881	Equation 6.10.8.1.1-1 lateral torsion buckling	1	1	-0.001	0.000	0.000	-0.012	-0.001	-0.001	-0.015	0.282
0.400	24.708	---	---	48.881	Equation 6.10.8.1.1-1 lateral torsion buckling	1	1	-0.009	-0.002	-0.001	-0.103	-0.011	-0.008	-1.742	0.702
0.500	999.990	---	---	232634.188	Equation 6.10.7.1.1-1	1	1	0.000	0.000	0.000	0.000	0.000	0.000	0.000	0.000
0.600	15.907	---	---	48.881	Equation 6.10.8.1.1-1 lateral torsion buckling	1	1	0.155	0.035	0.026	-0.118	-0.012	-0.009	-2.828	0.766
11.500	8.451	---	---	232634.188	Equation 6.10.7.1.1-1	1	1	29300.594	4577.887	3424.575	-0.048	-0.011	-0.008	18951.278	4.102
21.400	4.091	---	---	232634.188	Equation 6.10.7.1.1-1	1	1	52937.937	8232.541	6158.508	0.027	-0.009	-0.007	32486.076	8.423
23.000	3.716	---	---	232634.188	Equation 6.10.7.1.1-1	1	1	56526.550	8784.320	6571.277	0.049	-0.009	-0.007	34763.580	9.135
25.900	3.111	---	---	232634.188	Equation 6.10.7.1.1-1	1	1	62839.636	9750.966	7294.395	0.046	-0.007	-0.005	38687.522	11.442
26.100	4.441	---	---	291248.988	Equation 6.10.7.1.1-1	1	1	63263.640	9833.199	7355.911	0.029	-0.004	-0.003	38952.809	6.490

Date:	8/2/2021	Span3-5ft-EB.lbsx	
Time:	2:26 PM	Bentley LEAP Bridge Steel [AASHTO LRFD 8th Ed. with 2017 Interims]	v21.00.00.28

FLEXURE RATING

POI Loc. (ft)	Moment Rating Factor	Vehicle Tonnage (Tons)	Rating Tonnage (Tons)	Moment/Stress Resistance (kip-in / ksi)	Controlling Equation	φc	φs	DC1 (kip-in / ksi)	DC2 (kip-in / ksi)	DW (kip-ft / ksi)	flDC1 (ksi)	flDC2 (ksi)	flDW (ksi)	LL (kip-in / ksi)	flLL (ksi)
34.500	3.680	---	---	291248.988	Equation 6.10.7.1.1-1	1	1	80265.527	12443.723	9308.763	0.004	0.006	0.005	48994.217	1.920
41.900	2.813	---	---	291248.988	Equation 6.10.7.1.1-1	1	1	93721.604	14490.811	10840.126	-0.069	0.019	0.014	56980.969	3.443
42.100	4.652	---	---	395608.291	Equation 6.10.7.1.1-1	1	1	94068.019	14560.459	10892.227	-0.024	0.006	0.004	57174.547	1.092
42.300	4.626	---	---	395608.291	Equation 6.10.7.1.1-1	1	1	94410.218	14612.065	10930.832	-0.025	0.006	0.004	57338.264	1.132
46.000	4.145	---	---	395608.291	Equation 6.10.7.1.1-1	1	1	100555.401	15545.117	11628.820	-0.055	0.008	0.006	60878.304	1.889
57.500	3.330	---	---	395608.291	Equation 6.10.7.1.1-1	1	1	117254.989	18086.830	13530.196	-0.019	0.008	0.006	71050.770	1.566
63.200	3.066	---	---	395608.291	Equation 6.10.7.1.1-1	1	1	124175.039	19141.582	14319.223	-0.041	0.009	0.006	75047.648	1.333
69.000	2.838	---	---	395608.291	Equation 6.10.7.1.1-1	1	1	130291.422	20085.668	15025.465	-0.108	0.011	0.008	78836.004	1.160
80.500	2.502	---	---	395608.291	Equation 6.10.7.1.1-1	1	1	139770.381	21532.814	16108.030	-0.044	0.010	0.008	84395.682	1.471
84.100	2.436	---	---	395608.291	Equation 6.10.7.1.1-1	1	1	141985.214	21870.715	16360.802	-0.053	0.011	0.008	85516.301	1.528
92.000	2.321	---	---	395608.291	Equation 6.10.7.1.1-1	1	1	145588.051	22430.308	16779.419	-0.134	0.013	0.010	87604.902	1.657

Date:	8/2/2021	Span3-5ft-EB.lbsx	
Time:	2:26 PM	Bentley LEAP Bridge Steel [AASHTO LRFD 8th Ed. with 2017 Interims]	v21.00.00.28

FLEXURE RATING

POI Loc. (ft)	Moment Rating Factor	Vehicle Tonnage (Tons)	Rating Tonnage (Tons)	Moment/Stress Resistance (kip-in / ksi)	Controlling Equation	φc	φs	DC1 (kip-in / ksi)	DC2 (kip-in / ksi)	DW (kip-ft / ksi)	flDC1 (ksi)	flDC2 (ksi)	flDW (ksi)	LL (kip-in / ksi)	flLL (ksi)
103.625	2.253	---	---	395608.291	Equation 6.10.7.1.1-1	1	1	147878.949	22774.462	17036.870	-0.053	0.012	0.009	88966.512	1.758
105.000	2.254	---	---	395608.291	Equation 6.10.7.1.1-1	1	1	147901.666	22777.898	17039.438	-0.054	0.012	0.009	88902.360	1.749
115.250	2.302	---	---	395608.291	Equation 6.10.7.1.1-1	1	1	146451.724	22561.356	16877.449	-0.130	0.012	0.009	88261.488	1.468
125.900	2.424	---	---	395608.291	Equation 6.10.7.1.1-1	1	1	141982.967	21868.724	16359.313	-0.047	0.010	0.008	85583.442	1.729
126.750	2.436	---	---	395608.291	Equation 6.10.7.1.1-1	1	1	141492.254	21793.951	16303.377	-0.045	0.010	0.008	85357.638	1.742
138.250	2.727	---	---	395608.291	Equation 6.10.7.1.1-1	1	1	132871.473	20477.197	15318.356	-0.099	0.010	0.008	80292.222	1.505
146.800	3.080	---	---	395608.291	Equation 6.10.7.1.1-1	1	1	124168.910	19136.829	14315.669	-0.035	0.008	0.006	75237.574	1.045
149.750	3.229	---	---	395608.291	Equation 6.10.7.1.1-1	1	1	120697.931	18606.812	13919.180	-0.028	0.008	0.006	73375.470	0.868
161.250	3.997	---	---	395608.291	Equation 6.10.7.1.1-1	1	1	104861.908	16192.239	12112.910	-0.076	0.007	0.005	64146.978	0.756
167.700	4.618	---	---	395608.291	Equation 6.10.7.1.1-1	1	1	94398.325	14599.662	10921.554	-0.022	0.006	0.005	57843.842	0.933
167.900	4.636	---	---	395608.291	Equation 6.10.7.1.1-1	1	1	94055.856	14547.831	10882.781	-0.021	0.006	0.005	57653.033	0.960

Date:	8/2/2021	Span3-5ft-EB.lbsx	
Time:	2:26 PM	Bentley LEAP Bridge Steel [AASHTO LRFD 8th Ed. with 2017 Interims]	v21.00.00.28

FLEXURE RATING

POI Loc. (ft)	Moment Rating Factor	Vehicle Tonnage (Tons)	Rating Tonnage (Tons)	Moment/Stress Resistance (kip-in / ksi)	Controlling Equation	φc	φs	DC1 (kip-in / ksi)	DC2 (kip-in / ksi)	DW (kip-ft / ksi)	flDC1 (ksi)	flDC2 (ksi)	flDW (ksi)	LL (kip-in / ksi)	flLL (ksi)
168.100	2.811	---	---	291248.988	Equation 6.10.7.1.1-1	1	1	93709.465	14477.091	10829.862	-0.058	0.020	0.015	57443.094	3.111
172.750	3.156	---	---	291248.988	Equation 6.10.7.1.1-1	1	1	85419.497	13216.037	9886.507	-0.010	0.017	0.012	52418.482	4.393
183.900	4.082	---	---	291248.988	Equation 6.10.7.1.1-1	1	1	63254.661	9814.054	7341.590	0.017	0.016	0.012	39274.405	9.435
184.100	2.833	---	---	232634.188	Equation 6.10.7.1.1-1	1	1	62828.224	9731.546	7279.868	0.021	0.028	0.021	38989.512	16.396
184.250	3.131	---	---	232634.188	Equation 6.10.7.1.1-1	1	1	62507.580	9676.574	7238.744	0.023	0.019	0.014	38769.678	11.146
188.600	3.981	---	---	232634.188	Equation 6.10.7.1.1-1	1	1	52912.262	8202.354	6135.927	-0.013	0.013	0.010	33012.137	9.066
197.125	7.331	---	---	232634.188	Equation 6.10.7.1.1-1	1	1	32720.208	5076.020	3797.213	-0.065	0.001	0.001	21004.047	5.035
209.400	195.007	---	---	232634.188	Equation 6.10.7.1.1-1	1	1	367.167	60.930	45.580	-0.139	-0.017	-0.013	280.763	0.825
209.500	999.990	---	---	232634.188	Equation 6.10.7.1.1-1	1	1	0.000	0.000	0.000	0.000	0.000	0.000	0.000	0.000
209.600	156.614	---	---	48.881	Equation 6.10.8.1.1-1 lateral torsion buckling	1	1	-0.009	0.000	0.000	-0.109	-0.013	-0.010	-0.066	0.737

Date:	8/2/2021	Span3-5ft-EB.lbsx	
Time:	2:26 PM	Bentley LEAP Bridge Steel [AASHTO LRFD 8th Ed. with 2017 Interims]	v21.00.00.28

FLEXURE RATING

POI Loc. (ft)	Moment Rating Factor	Vehicle Tonnage (Tons)	Rating Tonnage (Tons)	Moment/Stress Resistance (kip-in / ksi)	Controlling Equation	φc	φs	DC1 (kip-in / ksi)	DC2 (kip-in / ksi)	DW (kip-ft / ksi)	flDC1 (ksi)	flDC2 (ksi)	flDW (ksi)	LL (kip-in / ksi)	flLL (ksi)
210.000	416.607	---	---	48.881	Equation 6.10.8.1.1-1 lateral torsion buckling	1	1	-0.001	0.000	0.000	-0.011	-0.002	-0.001	-0.015	0.308

SHEAR RATING

POI Loc. (ft)	Shear Rating Factor	Vehicle Tonnage (Tons)	Rating Tonnage (Tons)	Shear Resistance (kip)	Controlling Equation	φc	φs	DC1 (kip)	DC2 (kip)	DW (kip)	LL (kip)
0.000	65.263	---	---	1685.625	Equation 6.10.9.1-1	1.000	1.000	-3.407	-0.162	-0.121	-25.772
0.400	16.844	---	---	1685.625	Equation 6.10.9.1-1	1.000	1.000	-4.803	-0.308	-0.230	100.389
0.500	8.350	---	---	1685.625	Equation 6.10.9.1-1	1.000	1.000	233.921	35.853	26.820	166.355
0.600	8.350	---	---	1685.625	Equation 6.10.9.1-1	1.000	1.000	233.890	35.847	26.816	166.355
11.500	3.251	---	---	761.178	Equation 6.10.9.1-1	1.000	1.000	209.835	32.095	24.009	152.320
21.400	3.863	---	---	761.178	Equation 6.10.9.1-1	1.000	1.000	188.663	28.694	21.465	135.223
23.000	3.891	---	---	761.178	Equation 6.10.9.1-1	1.000	1.000	185.651	28.143	21.053	135.255

SHEAR RATING

POI Loc. (ft)	Shear Rating Factor	Vehicle Tonnage (Tons)	Rating Tonnage (Tons)	Shear Resistance (kip)	Controlling Equation	φc	φs	DC1 (kip)	DC2 (kip)	DW (kip)	LL (kip)
25.900	6.650	---	---	1124.840	Equation 6.10.9.1-1	1.000	1.000	178.724	27.146	20.307	135.140
26.100	6.669	---	---	1124.840	Equation 6.10.9.1-1	1.000	1.000	177.966	27.080	20.258	134.879
34.500	3.929	---	---	678.990	Equation 6.10.9.1-1	1.000	1.000	159.630	24.195	18.100	121.427
41.900	4.408	---	---	678.990	Equation 6.10.9.1-1	1.000	1.000	143.907	21.655	16.200	112.793
42.100	6.432	---	---	904.929	Equation 6.10.9.1-1	1.000	1.000	143.071	21.590	16.151	112.581
42.300	6.459	---	---	904.929	Equation 6.10.9.1-1	1.000	1.000	142.659	21.521	16.099	112.186
46.000	5.295	---	---	747.024	Equation 6.10.9.1-1	1.000	1.000	135.338	20.251	15.149	108.831
57.500	6.222	---	---	747.024	Equation 6.10.9.1-1	1.000	1.000	108.191	16.309	12.200	98.088
63.200	6.945	---	---	747.024	Equation 6.10.9.1-1	1.000	1.000	95.022	14.353	10.737	90.262
69.000	7.251	---	---	747.024	Equation 6.10.9.1-1	1.000	1.000	82.930	12.369	9.253	88.605
80.500	8.496	---	---	747.024	Equation 6.10.9.1-1	1.000	1.000	55.864	8.413	6.293	79.616

SHEAR RATING

POI Loc. (ft)	Shear Rating Factor	Vehicle Tonnage (Tons)	Rating Tonnage (Tons)	Shear Resistance (kip)	Controlling Equation	φc	φs	DC1 (kip)	DC2 (kip)	DW (kip)	LL (kip)
84.100	9.048	---	---	747.024	Equation 6.10.9.1-1	1.000	1.000	47.497	7.178	5.370	75.927
92.000	9.769	---	---	742.922	Equation 6.10.9.1-1	1.000	1.000	30.767	4.477	3.349	72.100
103.625	11.508	---	---	742.922	Equation 6.10.9.1-1	1.000	1.000	3.438	0.470	0.351	64.189
105.000	11.994	---	---	742.922	Equation 6.10.9.1-1	1.000	1.000	-0.019	-0.030	-0.022	61.946
115.250	10.474	---	---	742.922	Equation 6.10.9.1-1	1.000	1.000	-24.770	-3.567	-2.668	-67.970
125.900	9.238	---	---	747.024	Equation 6.10.9.1-1	1.000	1.000	-47.407	-7.213	-5.396	-74.370
126.750	9.011	---	---	747.024	Equation 6.10.9.1-1	1.000	1.000	-49.632	-7.503	-5.613	-75.935
138.250	7.685	---	---	747.024	Equation 6.10.9.1-1	1.000	1.000	-76.924	-11.473	-8.582	-84.591
146.800	7.072	---	---	747.024	Equation 6.10.9.1-1	1.000	1.000	-94.899	-14.401	-10.773	-88.654
149.750	6.636	---	---	747.024	Equation 6.10.9.1-1	1.000	1.000	-101.926	-15.412	-11.530	-93.153
161.250	5.713	---	---	747.024	Equation 6.10.9.1-1	1.000	1.000	-129.253	-19.378	-14.496	-102.209

SHEAR RATING

POI Loc. (ft)	Shear Rating Factor	Vehicle Tonnage (Tons)	Rating Tonnage (Tons)	Shear Resistance (kip)	Controlling Equation	φc	φs	DC1 (kip)	DC2 (kip)	DW (kip)	LL (kip)
167.700	6.104	---	---	831.150	Equation 6.10.9.1-1	1.000	1.000	-142.669	-21.590	-16.151	-106.602
167.900	6.079	---	---	831.150	Equation 6.10.9.1-1	1.000	1.000	-143.081	-21.659	-16.202	-106.968
168.100	4.152	---	---	626.874	Equation 6.10.9.1-1	1.000	1.000	-143.927	-21.725	-16.252	-107.179
172.750	3.876	---	---	626.874	Equation 6.10.9.1-1	1.000	1.000	-153.802	-23.323	-17.447	-111.527
183.900	10.925	---	---	1557.297	Equation 6.10.9.1-1	1.000	1.000	-177.887	-27.151	-20.311	-121.918
184.100	10.909	---	---	1557.297	Equation 6.10.9.1-1	1.000	1.000	-178.556	-27.226	-20.367	-122.025
184.250	3.691	---	---	684.644	Equation 6.10.9.1-1	1.000	1.000	-180.030	-27.273	-20.402	-123.794
188.600	3.508	---	---	684.644	Equation 6.10.9.1-1	1.000	1.000	-188.715	-28.768	-21.520	-127.025
197.125	3.067	---	---	684.644	Equation 6.10.9.1-1	1.000	1.000	-206.781	-31.699	-23.713	-137.719
209.400	8.849	---	---	1685.625	Equation 6.10.9.1-1	1.000	1.000	-233.748	-35.925	-26.875	-156.971
209.500	8.849	---	---	1685.625	Equation 6.10.9.1-1	1.000	1.000	-233.779	-35.931	-26.879	-156.971

SHEAR RATING

POI Loc. (ft)	Shear Rating Factor	Vehicle Tonnage (Tons)	Rating Tonnage (Tons)	Shear Resistance (kip)	Controlling Equation	φc	φs	DC1 (kip)	DC2 (kip)	DW (kip)	LL (kip)
209.600	17.783	---	---	1685.625	Equation 6.10.9.1-1	1.000	1.000	4.802	0.283	0.212	-95.087
210.000	49.661	---	---	1685.625	Equation 6.10.9.1-1	1.000	1.000	3.406	0.147	0.110	33.869

SUMMARY REPORT

Load Rating Combination	Controlling POI Loc. (ft)	Based on	Controlling Equation	Rating Factor	Vehicle Tonnage (Tons)	Rating Tonnage (Tons)
Design Inventory	103.625	Flexure	Equation 6.10.7.1.1-1	1.737	---	---
Design Operating	103.625	Flexure	Equation 6.10.7.1.1-1	2.253	---	---
Permit	103.625	Flexure	Equation 6.10.7.1.1-1	2.118	59.995	127.084

Group01 Member 03

Design Inventory (Strength I) Permit

FLEXURE RATING

POI Loc. (ft)	Moment Rating Factor	Vehicle Tonnage (Tons)	Rating Tonnage (Tons)	Moment/Stress Resistance (kip-in / ksi)	Controlling Equation	φc	φs	DC1 (kip-in / ksi)	DC2 (kip-in / ksi)	DW (kip-ft / ksi)	flDC1 (ksi)	flDC2 (ksi)	flDW (ksi)	LL (kip-in / ksi)	flLL (ksi)

Date:	8/2/2021	Span3-5ft-EB.lbsx	
Time:	2:26 PM	Bentley LEAP Bridge Steel [AASHTO LRFD 8th Ed. with 2017 Interims]	v21.00.00.28

FLEXURE RATING

POI Loc. (ft)	Moment Rating Factor	Vehicle Tonnage (Tons)	Rating Tonnage (Tons)	Moment/Stress Resistance (kip-in / ksi)	Controlling Equation	φc	φs	DC1 (kip-in / ksi)	DC2 (kip-in / ksi)	DW (kip-ft / ksi)	flDC1 (ksi)	flDC2 (ksi)	flDW (ksi)	LL (kip-in / ksi)	flLL (ksi)
0.000	469.550	59.995	28170.655	48.881	Equation 6.10.8.1.1-1 lateral torsion buckling	1	1	-0.001	-0.001	-0.001	0.008	0.002	0.001	-0.014	0.269
0.400	21.563	59.995	1293.689	48.881	Equation 6.10.8.1.1-1 lateral torsion buckling	1	1	-0.009	-0.001	-0.001	0.094	0.013	0.009	-2.036	0.685
0.500	999.990	59.995	59994.402	232634.188	Equation 6.10.7.1.1-1	1	1	0.000	0.000	0.000	0.000	0.000	0.000	0.000	0.000
0.600	13.827	59.995	829.533	48.881	Equation 6.10.8.1.1-1 lateral torsion buckling	1	1	0.152	0.029	0.022	0.104	0.015	0.011	-3.293	0.762
11.500	7.906	59.995	474.303	232634.188	Equation 6.10.7.1.1-1	1	1	29028.845	4582.162	3427.774	0.022	0.002	0.001	20678.976	4.004
21.400	3.831	59.995	229.862	232634.188	Equation 6.10.7.1.1-1	1	1	52424.329	8272.291	6188.244	-0.052	-0.010	-0.008	35459.063	8.268
23.000	3.476	59.995	208.556	232634.188	Equation 6.10.7.1.1-1	1	1	55973.950	8828.894	6604.622	-0.073	-0.012	-0.009	38023.830	8.951
25.900	2.917	59.995	175.029	232634.188	Equation 6.10.7.1.1-1	1	1	62222.374	9800.571	7331.503	-0.147	-0.012	-0.009	42344.294	11.128
26.100	4.151	59.995	249.020	291248.988	Equation 6.10.7.1.1-1	1	1	62642.080	9896.153	7403.005	-0.088	-0.007	-0.005	42631.434	6.287

Date:	8/2/2021	Span3-5ft-EB.lbsx	
Time:	2:26 PM	Bentley LEAP Bridge Steel [AASHTO LRFD 8th Ed. with 2017 Interims]	v21.00.00.28

FLEXURE RATING

POI Loc. (ft)	Moment Rating Factor	Vehicle Tonnage (Tons)	Rating Tonnage (Tons)	Moment/Stress Resistance (kip-in / ksi)	Controlling Equation	φc	φs	DC1 (kip-in / ksi)	DC2 (kip-in / ksi)	DW (kip-ft / ksi)	flDC1 (ksi)	flDC2 (ksi)	flDW (ksi)	LL (kip-in / ksi)	flLL (ksi)
34.500	3.399	59.995	203.948	291248.988	Equation 6.10.7.1.1-1	1	1	79456.655	12526.906	9370.991	-0.152	0.004	0.003	53309.046	1.976
41.900	2.656	59.995	159.332	291248.988	Equation 6.10.7.1.1-1	1	1	92747.719	14588.504	10913.208	-0.209	0.016	0.012	61238.187	3.115
42.100	4.363	59.995	261.765	395608.291	Equation 6.10.7.1.1-1	1	1	93089.667	14672.035	10975.693	-0.063	0.005	0.004	61449.071	0.999
42.300	4.340	59.995	260.364	395608.291	Equation 6.10.7.1.1-1	1	1	93427.703	14723.833	11014.443	-0.062	0.005	0.004	61610.828	1.040
46.000	3.900	59.995	233.977	395608.291	Equation 6.10.7.1.1-1	1	1	99490.358	15664.630	11718.224	-0.049	0.007	0.005	65233.188	1.853
57.500	3.149	59.995	188.907	395608.291	Equation 6.10.7.1.1-1	1	1	116014.185	18222.718	13631.849	-0.100	0.008	0.006	75879.504	1.416
63.200	2.916	59.995	174.946	395608.291	Equation 6.10.7.1.1-1	1	1	122847.123	19282.748	14424.826	-0.090	0.009	0.007	79501.638	1.261
69.000	2.699	59.995	161.899	395608.291	Equation 6.10.7.1.1-1	1	1	128875.161	20235.317	15137.413	-0.058	0.010	0.007	83317.896	1.247
80.500	2.388	59.995	143.246	395608.291	Equation 6.10.7.1.1-1	1	1	138264.798	21692.239	16227.292	-0.125	0.011	0.009	89281.278	1.337
84.100	2.326	59.995	139.536	395608.291	Equation 6.10.7.1.1-1	1	1	140451.673	22031.677	16481.215	-0.121	0.012	0.009	90412.654	1.403
92.000	2.231	59.995	133.821	395608.291	Equation 6.10.7.1.1-1	1	1	143993.426	22596.439	16903.695	-0.071	0.012	0.009	91704.636	1.776

Date:	8/2/2021	Span3-5ft-EB.lbsx	
Time:	2:26 PM	Bentley LEAP Bridge Steel [AASHTO LRFD 8th Ed. with 2017 Interims]	v21.00.00.28

FLEXURE RATING

POI Loc. (ft)	Moment Rating Factor	Vehicle Tonnage (Tons)	Rating Tonnage (Tons)	Moment/Stress Resistance (kip-in / ksi)	Controlling Equation	φc	φs	DC1 (kip-in / ksi)	DC2 (kip-in / ksi)	DW (kip-ft / ksi)	flDC1 (ksi)	flDC2 (ksi)	flDW (ksi)	LL (kip-in / ksi)	flLL (ksi)
103.625	2.150	59.995	128.995	395608.291	Equation 6.10.7.1.1-1	1	1	146279.011	22942.948	17162.908	-0.142	0.013	0.010	94222.116	1.586
105.000	2.154	59.995	129.228	395608.291	Equation 6.10.7.1.1-1	1	1	146301.166	22946.464	17165.537	-0.141	0.013	0.010	94019.313	1.594
115.250	2.200	59.995	131.959	395608.291	Equation 6.10.7.1.1-1	1	1	144846.503	22729.033	17002.884	-0.067	0.011	0.008	92818.548	1.638
125.900	2.308	59.995	138.456	395608.291	Equation 6.10.7.1.1-1	1	1	140450.125	22031.386	16480.995	-0.129	0.012	0.009	90843.638	1.556
126.750	2.317	59.995	139.023	395608.291	Equation 6.10.7.1.1-1	1	1	139965.216	21956.639	16425.081	-0.130	0.012	0.009	90726.318	1.555
138.250	2.593	59.995	155.550	395608.291	Equation 6.10.7.1.1-1	1	1	131422.932	20631.468	15433.761	-0.058	0.009	0.007	84919.428	1.589
146.800	2.896	59.995	173.745	395608.291	Equation 6.10.7.1.1-1	1	1	122842.431	19281.440	14423.848	-0.101	0.009	0.007	80542.212	1.012
149.750	3.025	59.995	181.462	395608.291	Equation 6.10.7.1.1-1	1	1	119413.692	18749.312	14025.779	-0.102	0.008	0.006	78780.276	0.850
161.250	3.730	59.995	223.758	395608.291	Equation 6.10.7.1.1-1	1	1	103742.290	16320.338	12208.739	-0.043	0.005	0.004	68818.896	0.901
167.700	4.252	59.995	255.124	395608.291	Equation 6.10.7.1.1-1	1	1	93417.021	14716.470	11008.935	-0.074	0.006	0.004	63228.506	0.884
167.900	4.264	59.995	255.794	395608.291	Equation 6.10.7.1.1-1	1	1	93078.849	14664.613	10970.142	-0.075	0.006	0.004	63122.081	0.903

Date:	8/2/2021	Span3-5ft-EB.lbsx	
Time:	2:26 PM	Bentley LEAP Bridge Steel [AASHTO LRFD 8th Ed. with 2017 Interims]	v21.00.00.28

FLEXURE RATING

POI Loc. (ft)	Moment Rating Factor	Vehicle Tonnage (Tons)	Rating Tonnage (Tons)	Moment/Stress Resistance (kip-in / ksi)	Controlling Equation	φc	φs	DC1 (kip-in / ksi)	DC2 (kip-in / ksi)	DW (kip-ft / ksi)	flDC1 (ksi)	flDC2 (ksi)	flDW (ksi)	LL (kip-in / ksi)	flLL (ksi)
168.100	2.599	59.995	155.929	291248.988	Equation 6.10.7.1.1-1	1	1	92736.752	14580.384	10907.133	-0.238	0.018	0.013	62955.217	2.871
172.750	2.898	59.995	173.887	291248.988	Equation 6.10.7.1.1-1	1	1	84546.733	13311.935	9958.246	-0.206	0.016	0.012	58222.152	3.993
183.900	3.751	59.995	225.012	291248.988	Equation 6.10.7.1.1-1	1	1	62621.494	9887.715	7396.692	-0.130	0.015	0.011	44559.307	8.961
184.100	2.610	59.995	156.586	232634.188	Equation 6.10.7.1.1-1	1	1	62199.350	9794.615	7327.048	-0.219	0.025	0.019	44415.184	15.649
184.250	2.849	59.995	170.911	232634.188	Equation 6.10.7.1.1-1	1	1	61881.921	9737.901	7284.621	-0.154	0.017	0.013	44174.646	10.684
188.600	3.595	59.995	215.659	232634.188	Equation 6.10.7.1.1-1	1	1	52394.014	8252.770	6173.642	-0.096	0.016	0.012	37913.356	8.705
197.125	6.510	59.995	390.567	232634.188	Equation 6.10.7.1.1-1	1	1	32412.785	5099.515	3814.789	-0.004	0.015	0.011	24557.559	4.810
209.400	176.691	59.995	10600.556	232634.188	Equation 6.10.7.1.1-1	1	1	363.360	61.200	45.782	0.130	0.015	0.011	319.307	0.902
209.500	999.990	59.995	59994.402	232634.188	Equation 6.10.7.1.1-1	1	1	0.000	0.000	0.000	0.000	0.000	0.000	0.000	0.000
209.600	136.151	59.995	8168.379	48.881	Equation 6.10.8.1.1-1 lateral torsion buckling	1	1	-0.009	0.001	0.001	0.103	0.012	0.009	-0.116	0.727

Date:	8/2/2021	Span3-5ft-EB.lbsx	
Time:	2:26 PM	Bentley LEAP Bridge Steel [AASHTO LRFD 8th Ed. with 2017 Interims]	v21.00.00.28

FLEXURE RATING

POI Loc. (ft)	Moment Rating Factor	Vehicle Tonnage (Tons)	Rating Tonnage (Tons)	Moment/Stress Resistance (kip-in / ksi)	Controlling Equation	φc	φs	DC1 (kip-in / ksi)	DC2 (kip-in / ksi)	DW (kip-ft / ksi)	flDC1 (ksi)	flDC2 (ksi)	flDW (ksi)	LL (kip-in / ksi)	flLL (ksi)
210.000	394.914	59.995	23692.889	48.881	Equation 6.10.8.1.1-1 lateral torsion buckling	1	1	-0.001	-0.001	-0.001	0.010	0.001	0.001	-0.023	0.301

SHEAR RATING

POI Loc. (ft)	Shear Rating Factor	Vehicle Tonnage (Tons)	Rating Tonnage (Tons)	Shear Resistance (kip)	Controlling Equation	φc	φs	DC1 (kip)	DC2 (kip)	DW (kip)	LL (kip)
0.000	32.292	59.995	1937.370	1685.625	Equation 6.10.9.1-1	1.000	1.000	-3.467	-0.145	-0.108	-52.084
0.400	13.541	59.995	812.381	1685.625	Equation 6.10.9.1-1	1.000	1.000	-4.863	-0.286	-0.214	124.881
0.500	6.718	59.995	403.051	1685.625	Equation 6.10.9.1-1	1.000	1.000	231.887	35.911	26.864	207.048
0.600	6.718	59.995	403.063	1685.625	Equation 6.10.9.1-1	1.000	1.000	231.856	35.905	26.859	207.048
11.500	2.582	59.995	154.889	761.178	Equation 6.10.9.1-1	1.000	1.000	207.800	32.154	24.053	192.575
21.400	3.129	59.995	187.734	761.178	Equation 6.10.9.1-1	1.000	1.000	186.628	28.754	21.510	167.548
23.000	3.119	59.995	187.106	761.178	Equation 6.10.9.1-1	1.000	1.000	183.793	28.202	21.097	169.329

SHEAR RATING

POI Loc. (ft)	Shear Rating Factor	Vehicle Tonnage (Tons)	Rating Tonnage (Tons)	Shear Resistance (kip)	Controlling Equation	φc	φs	DC1 (kip)	DC2 (kip)	DW (kip)	LL (kip)
25.900	5.338	59.995	320.266	1124.840	Equation 6.10.9.1-1	1.000	1.000	176.866	27.202	20.349	168.675
26.100	5.356	59.995	321.340	1124.840	Equation 6.10.9.1-1	1.000	1.000	176.109	27.135	20.299	168.275
34.500	3.152	59.995	189.129	678.990	Equation 6.10.9.1-1	1.000	1.000	157.772	24.250	18.141	151.892
41.900	3.607	59.995	216.373	678.990	Equation 6.10.9.1-1	1.000	1.000	142.050	21.709	16.240	138.358
42.100	5.257	59.995	315.387	904.929	Equation 6.10.9.1-1	1.000	1.000	141.214	21.644	16.191	138.082
42.300	5.277	59.995	316.622	904.929	Equation 6.10.9.1-1	1.000	1.000	140.802	21.575	16.140	137.644
46.000	4.231	59.995	253.862	747.024	Equation 6.10.9.1-1	1.000	1.000	134.065	20.305	15.190	136.472
57.500	4.985	59.995	299.078	747.024	Equation 6.10.9.1-1	1.000	1.000	106.918	16.331	12.217	122.678
63.200	5.565	59.995	333.852	747.024	Equation 6.10.9.1-1	1.000	1.000	93.749	14.376	10.754	112.881
69.000	5.511	59.995	330.607	747.024	Equation 6.10.9.1-1	1.000	1.000	82.283	12.392	9.270	116.699
80.500	6.389	59.995	383.289	747.024	Equation 6.10.9.1-1	1.000	1.000	55.217	8.423	6.301	105.982

SHEAR RATING

POI Loc. (ft)	Shear Rating Factor	Vehicle Tonnage (Tons)	Rating Tonnage (Tons)	Shear Resistance (kip)	Controlling Equation	φc	φs	DC1 (kip)	DC2 (kip)	DW (kip)	LL (kip)
84.100	6.839	59.995	410.296	747.024	Equation 6.10.9.1-1	1.000	1.000	46.850	7.188	5.377	100.545
92.000	7.004	59.995	420.180	742.922	Equation 6.10.9.1-1	1.000	1.000	30.730	4.486	3.356	100.570
103.625	8.356	59.995	501.313	742.922	Equation 6.10.9.1-1	1.000	1.000	3.400	0.475	0.355	88.403
105.000	8.652	59.995	519.093	742.922	Equation 6.10.9.1-1	1.000	1.000	-0.056	-0.025	-0.018	-85.853
115.250	7.477	59.995	448.563	742.922	Equation 6.10.9.1-1	1.000	1.000	-24.807	-3.564	-2.666	-95.214
125.900	7.052	59.995	423.070	747.024	Equation 6.10.9.1-1	1.000	1.000	-46.837	-7.210	-5.394	-97.505
126.750	6.914	59.995	414.812	747.024	Equation 6.10.9.1-1	1.000	1.000	-49.063	-7.500	-5.611	-99.051
138.250	5.939	59.995	356.318	747.024	Equation 6.10.9.1-1	1.000	1.000	-76.354	-11.474	-8.584	-109.547
146.800	5.555	59.995	333.288	747.024	Equation 6.10.9.1-1	1.000	1.000	-93.705	-14.403	-10.774	-113.072
149.750	5.293	59.995	317.539	747.024	Equation 6.10.9.1-1	1.000	1.000	-100.732	-15.414	-11.531	-117.018
161.250	4.575	59.995	274.507	747.024	Equation 6.10.9.1-1	1.000	1.000	-128.059	-19.389	-14.504	-127.871

SHEAR RATING

POI Loc. (ft)	Shear Rating Factor	Vehicle Tonnage (Tons)	Rating Tonnage (Tons)	Shear Resistance (kip)	Controlling Equation	φc	φs	DC1 (kip)	DC2 (kip)	DW (kip)	LL (kip)
167.700	5.182	59.995	310.886	831.150	Equation 6.10.9.1-1	1.000	1.000	-140.877	-21.601	-16.159	-125.922
167.900	5.163	59.995	309.771	831.150	Equation 6.10.9.1-1	1.000	1.000	-141.289	-21.670	-16.211	-126.273
168.100	3.532	59.995	211.875	626.874	Equation 6.10.9.1-1	1.000	1.000	-142.136	-21.736	-16.260	-126.501
172.750	3.197	59.995	191.826	626.874	Equation 6.10.9.1-1	1.000	1.000	-152.010	-23.333	-17.455	-135.760
183.900	8.981	59.995	538.802	1557.297	Equation 6.10.9.1-1	1.000	1.000	-176.096	-27.163	-20.320	-148.508
184.100	8.998	59.995	539.822	1557.297	Equation 6.10.9.1-1	1.000	1.000	-176.764	-27.237	-20.375	-148.139
184.250	3.091	59.995	185.442	684.644	Equation 6.10.9.1-1	1.000	1.000	-178.239	-27.301	-20.423	-148.395
188.600	2.926	59.995	175.557	684.644	Equation 6.10.9.1-1	1.000	1.000	-186.653	-28.796	-21.541	-152.982
197.125	2.540	59.995	152.364	684.644	Equation 6.10.9.1-1	1.000	1.000	-204.719	-31.727	-23.734	-167.137
209.400	7.249	59.995	434.894	1685.625	Equation 6.10.9.1-1	1.000	1.000	-231.686	-35.953	-26.896	-191.905
209.500	7.249	59.995	434.881	1685.625	Equation 6.10.9.1-1	1.000	1.000	-231.717	-35.959	-26.900	-191.905

Date:	8/2/2021	Span3-5ft-EB.lbsx	
Time:	2:26 PM	Bentley LEAP Bridge Steel [AASHTO LRFD 8th Ed. with 2017 Interims]	v21.00.00.28

SHEAR RATING

POI Loc. (ft)	Shear Rating Factor	Vehicle Tonnage (Tons)	Rating Tonnage (Tons)	Shear Resistance (kip)	Controlling Equation	φc	φs	DC1 (kip)	DC2 (kip)	DW (kip)	LL (kip)
209.600	14.593	59.995	875.503	1685.625	Equation 6.10.9.1-1	1.000	1.000	4.853	0.285	0.213	-115.876
210.000	26.824	59.995	1609.301	1685.625	Equation 6.10.9.1-1	1.000	1.000	3.458	0.148	0.111	62.702

Design Inventory (Strength I) **Design Inventory**

FLEXURE RATING

POI Loc. (ft)	Moment Rating Factor	Vehicle Tonnage (Tons)	Rating Tonnage (Tons)	Moment/Stress Resistance (kip-in / ksi)	Controlling Equation	φc	φs	DC1 (kip-in / ksi)	DC2 (kip-in / ksi)	DW (kip-ft / ksi)	flDC1 (ksi)	flDC2 (ksi)	flDW (ksi)	LL (kip-in / ksi)	flLL (ksi)
0.000	371.727	---	---	48.881	Equation 6.10.8.1.1-1 lateral torsion buckling	1	1	-0.001	-0.001	-0.001	0.008	0.002	0.001	-0.012	0.359
0.400	17.971	---	---	48.881	Equation 6.10.8.1.1-1 lateral torsion buckling	1	1	-0.009	-0.001	-0.001	0.094	0.013	0.009	-2.436	0.843
0.500	999.990	---	---	232634.188	Equation 6.10.7.1.1-1	1	1	0.000	0.000	0.000	0.000	0.000	0.000	0.000	0.000

Date:	8/2/2021	Span3-5ft-EB.lbsx	
Time:	2:26 PM	Bentley LEAP Bridge Steel [AASHTO LRFD 8th Ed. with 2017 Interims]	v21.00.00.28

FLEXURE RATING

POI Loc. (ft)	Moment Rating Factor	Vehicle Tonnage (Tons)	Rating Tonnage (Tons)	Moment/Stress Resistance (kip-in / ksi)	Controlling Equation	φc	φs	DC1 (kip-in / ksi)	DC2 (kip-in / ksi)	DW (kip-ft / ksi)	flDC1 (ksi)	flDC2 (ksi)	flDW (ksi)	LL (kip-in / ksi)	flLL (ksi)
0.600	11.530	---	---	48.881	Equation 6.10.8.1.1-1 lateral torsion buckling	1	1	0.152	0.029	0.022	0.104	0.015	0.011	-3.945	0.923
11.500	6.589	---	---	232634.188	Equation 6.10.7.1.1-1	1	1	29028.845	4582.162	3427.774	0.022	0.002	0.001	24271.646	5.337
21.400	3.154	---	---	232634.188	Equation 6.10.7.1.1-1	1	1	52424.329	8272.291	6188.244	-0.052	-0.010	-0.008	42133.532	11.034
23.000	2.864	---	---	232634.188	Equation 6.10.7.1.1-1	1	1	55973.950	8828.894	6604.622	-0.073	-0.012	-0.009	45137.820	11.946
25.900	2.395	---	---	232634.188	Equation 6.10.7.1.1-1	1	1	62222.374	9800.571	7331.503	-0.148	-0.012	-0.009	50351.042	14.910
26.100	3.420	---	---	291248.988	Equation 6.10.7.1.1-1	1	1	62642.080	9896.153	7403.005	-0.089	-0.007	-0.005	50700.077	8.424
34.500	2.839	---	---	291248.988	Equation 6.10.7.1.1-1	1	1	79456.655	12526.906	9370.991	-0.153	0.004	0.003	63757.352	2.427
41.900	2.197	---	---	291248.988	Equation 6.10.7.1.1-1	1	1	92747.719	14588.504	10913.208	-0.211	0.017	0.012	73772.055	3.982
42.100	3.614	---	---	395608.291	Equation 6.10.7.1.1-1	1	1	93089.667	14672.035	10975.693	-0.063	0.005	0.004	74037.537	1.279
42.300	3.593	---	---	395608.291	Equation 6.10.7.1.1-1	1	1	93427.703	14723.833	11014.443	-0.063	0.005	0.004	74256.231	1.338

Date:	8/2/2021	Span3-5ft-EB.lbsx	
Time:	2:26 PM	Bentley LEAP Bridge Steel [AASHTO LRFD 8th Ed. with 2017 Interims]	v21.00.00.28

FLEXURE RATING

POI Loc. (ft)	Moment Rating Factor	Vehicle Tonnage (Tons)	Rating Tonnage (Tons)	Moment/Stress Resistance (kip-in / ksi)	Controlling Equation	φc	φs	DC1 (kip-in / ksi)	DC2 (kip-in / ksi)	DW (kip-ft / ksi)	flDC1 (ksi)	flDC2 (ksi)	flDW (ksi)	LL (kip-in / ksi)	flLL (ksi)
46.000	3.211	---	---	395608.291	Equation 6.10.7.1.1-1	1	1	99490.358	15664.630	11718.224	-0.050	0.007	0.005	78790.740	2.476
57.500	2.604	---	---	395608.291	Equation 6.10.7.1.1-1	1	1	116014.185	18222.718	13631.849	-0.101	0.009	0.006	91625.100	1.773
63.200	2.405	---	---	395608.291	Equation 6.10.7.1.1-1	1	1	122847.123	19282.748	14424.826	-0.091	0.009	0.007	96410.737	1.523
69.000	2.221	---	---	395608.291	Equation 6.10.7.1.1-1	1	1	128875.161	20235.317	15137.413	-0.059	0.010	0.008	101125.500	1.562
80.500	1.972	---	---	395608.291	Equation 6.10.7.1.1-1	1	1	138264.798	21692.239	16227.292	-0.126	0.012	0.009	108117.030	1.619
84.100	1.918	---	---	395608.291	Equation 6.10.7.1.1-1	1	1	140451.673	22031.677	16481.215	-0.122	0.012	0.009	109609.438	1.699
92.000	1.825	---	---	395608.291	Equation 6.10.7.1.1-1	1	1	143993.426	22596.439	16903.695	-0.072	0.012	0.009	111906.060	2.271
103.625	1.774	---	---	395608.291	Equation 6.10.7.1.1-1	1	1	146279.011	22942.948	17162.908	-0.143	0.013	0.010	114137.310	1.946
105.000	1.776	---	---	395608.291	Equation 6.10.7.1.1-1	1	1	146301.166	22946.464	17165.537	-0.142	0.013	0.010	114006.311	1.951
115.250	1.804	---	---	395608.291	Equation 6.10.7.1.1-1	1	1	144846.503	22729.033	17002.884	-0.068	0.011	0.008	112986.090	2.082
125.900	1.908	---	---	395608.291	Equation 6.10.7.1.1-1	1	1	140450.125	22031.386	16480.995	-0.131	0.012	0.009	109834.167	1.914

Date:	8/2/2021	Span3-5ft-EB.lbsx	
Time:	2:26 PM	Bentley LEAP Bridge Steel [AASHTO LRFD 8th Ed. with 2017 Interims]	v21.00.00.28

FLEXURE RATING

POI Loc. (ft)	Moment Rating Factor	Vehicle Tonnage (Tons)	Rating Tonnage (Tons)	Moment/Stress Resistance (kip-in / ksi)	Controlling Equation	φc	φs	DC1 (kip-in / ksi)	DC2 (kip-in / ksi)	DW (kip-ft / ksi)	flDC1 (ksi)	flDC2 (ksi)	flDW (ksi)	LL (kip-in / ksi)	flLL (ksi)
126.750	1.917	---	---	395608.291	Equation 6.10.7.1.1-1	1	1	139965.216	21956.639	16425.081	-0.131	0.012	0.009	109583.460	1.918
138.250	2.136	---	---	395608.291	Equation 6.10.7.1.1-1	1	1	131422.932	20631.468	15433.761	-0.058	0.010	0.007	102869.970	2.042
146.800	2.415	---	---	395608.291	Equation 6.10.7.1.1-1	1	1	122842.431	19281.440	14423.848	-0.101	0.009	0.007	96702.785	1.152
149.750	2.531	---	---	395608.291	Equation 6.10.7.1.1-1	1	1	119413.692	18749.312	14025.779	-0.102	0.008	0.006	94312.050	0.927
161.250	3.118	---	---	395608.291	Equation 6.10.7.1.1-1	1	1	103742.290	16320.338	12208.739	-0.043	0.005	0.004	82393.920	1.045
167.700	3.595	---	---	395608.291	Equation 6.10.7.1.1-1	1	1	93417.021	14716.470	11008.935	-0.074	0.006	0.004	74794.412	1.050
167.900	3.607	---	---	395608.291	Equation 6.10.7.1.1-1	1	1	93078.849	14664.613	10970.142	-0.075	0.006	0.004	74588.631	1.080
168.100	2.198	---	---	291248.988	Equation 6.10.7.1.1-1	1	1	92736.752	14580.384	10907.133	-0.240	0.018	0.013	74350.511	3.475
172.750	2.439	---	---	291248.988	Equation 6.10.7.1.1-1	1	1	84546.733	13311.935	9958.246	-0.207	0.016	0.012	68495.385	5.287
183.900	3.120	---	---	291248.988	Equation 6.10.7.1.1-1	1	1	62621.494	9887.715	7396.692	-0.131	0.015	0.011	51886.853	12.048
184.100	2.162	---	---	232634.188	Equation 6.10.7.1.1-1	1	1	62199.350	9794.615	7327.048	-0.220	0.025	0.019	51694.692	21.015

Date:	8/2/2021	Span3-5ft-EB.lbsx	
Time:	2:26 PM	Bentley LEAP Bridge Steel [AASHTO LRFD 8th Ed. with 2017 Interims]	v21.00.00.28

FLEXURE RATING

POI Loc. (ft)	Moment Rating Factor	Vehicle Tonnage (Tons)	Rating Tonnage (Tons)	Moment/Stress Resistance (kip-in / ksi)	Controlling Equation	φc	φs	DC1 (kip-in / ksi)	DC2 (kip-in / ksi)	DW (kip-ft / ksi)	flDC1 (ksi)	flDC2 (ksi)	flDW (ksi)	LL (kip-in / ksi)	flLL (ksi)
184.250	2.384	---	---	232634.188	Equation 6.10.7.1.1-1	1	1	61881.921	9737.901	7284.621	-0.154	0.017	0.013	51429.630	14.261
188.600	3.015	---	---	232634.188	Equation 6.10.7.1.1-1	1	1	52394.014	8252.770	6173.642	-0.096	0.016	0.012	44012.334	11.632
197.125	5.501	---	---	232634.188	Equation 6.10.7.1.1-1	1	1	32412.785	5099.515	3814.789	-0.004	0.015	0.011	28327.886	6.425
209.400	147.756	---	---	232634.188	Equation 6.10.7.1.1-1	1	1	363.360	61.200	45.782	0.131	0.015	0.011	363.158	1.095
209.500	999.990	---	---	232634.188	Equation 6.10.7.1.1-1	1	1	0.000	0.000	0.000	0.000	0.000	0.000	0.000	0.000
209.600	119.334	---	---	48.881	Equation 6.10.8.1.1-1 lateral torsion buckling	1	1	-0.009	0.001	0.001	0.103	0.012	0.009	-0.092	0.951
210.000	320.755	---	---	48.881	Equation 6.10.8.1.1-1 lateral torsion buckling	1	1	-0.001	-0.001	-0.001	0.010	0.001	0.001	-0.019	0.399

SHEAR RATING

POI Loc. (ft)	Shear Rating Factor	Vehicle Tonnage (Tons)	Rating Tonnage (Tons)	Shear Resistance (kip)	Controlling Equation	φc	φs	DC1 (kip)	DC2 (kip)	DW (kip)	LL (kip)

SHEAR RATING

POI Loc. (ft)	Shear Rating Factor	Vehicle Tonnage (Tons)	Rating Tonnage (Tons)	Shear Resistance (kip)	Controlling Equation	φc	φs	DC1 (kip)	DC2 (kip)	DW (kip)	LL (kip)
0.000	41.050	---	---	1685.625	Equation 6.10.9.1-1	1.000	1.000	-3.467	-0.145	-0.108	-40.972
0.400	11.824	---	---	1685.625	Equation 6.10.9.1-1	1.000	1.000	-4.863	-0.286	-0.214	143.009
0.500	5.864	---	---	1685.625	Equation 6.10.9.1-1	1.000	1.000	231.887	35.911	26.864	237.220
0.600	5.864	---	---	1685.625	Equation 6.10.9.1-1	1.000	1.000	231.856	35.905	26.859	237.220
11.500	2.283	---	---	761.178	Equation 6.10.9.1-1	1.000	1.000	207.800	32.154	24.053	217.766
21.400	2.792	---	---	761.178	Equation 6.10.9.1-1	1.000	1.000	186.628	28.754	21.510	187.777
23.000	2.801	---	---	761.178	Equation 6.10.9.1-1	1.000	1.000	183.793	28.202	21.097	188.563
25.900	4.784	---	---	1124.840	Equation 6.10.9.1-1	1.000	1.000	176.866	27.202	20.349	188.213
26.100	4.801	---	---	1124.840	Equation 6.10.9.1-1	1.000	1.000	176.109	27.135	20.299	187.746
34.500	2.857	---	---	678.990	Equation 6.10.9.1-1	1.000	1.000	157.772	24.250	18.141	167.578
41.900	3.266	---	---	678.990	Equation 6.10.9.1-1	1.000	1.000	142.050	21.709	16.240	152.807

SHEAR RATING

POI Loc. (ft)	Shear Rating Factor	Vehicle Tonnage (Tons)	Rating Tonnage (Tons)	Shear Resistance (kip)	Controlling Equation	φc	φs	DC1 (kip)	DC2 (kip)	DW (kip)	LL (kip)
42.100	4.760	---	---	904.929	Equation 6.10.9.1-1	1.000	1.000	141.214	21.644	16.191	152.482
42.300	4.782	---	---	904.929	Equation 6.10.9.1-1	1.000	1.000	140.802	21.575	16.140	151.897
46.000	3.886	---	---	747.024	Equation 6.10.9.1-1	1.000	1.000	134.065	20.305	15.190	148.590
57.500	4.585	---	---	747.024	Equation 6.10.9.1-1	1.000	1.000	106.918	16.331	12.217	133.380
63.200	5.174	---	---	747.024	Equation 6.10.9.1-1	1.000	1.000	93.749	14.376	10.754	121.394
69.000	5.189	---	---	747.024	Equation 6.10.9.1-1	1.000	1.000	82.283	12.392	9.270	123.939
80.500	6.053	---	---	747.024	Equation 6.10.9.1-1	1.000	1.000	55.217	8.423	6.301	111.866
84.100	6.504	---	---	747.024	Equation 6.10.9.1-1	1.000	1.000	46.850	7.188	5.377	105.726
92.000	6.764	---	---	742.922	Equation 6.10.9.1-1	1.000	1.000	30.730	4.486	3.356	104.129
103.625	8.084	---	---	742.922	Equation 6.10.9.1-1	1.000	1.000	3.400	0.475	0.355	91.373
105.000	8.458	---	---	742.922	Equation 6.10.9.1-1	1.000	1.000	-0.056	-0.025	-0.018	87.845

SHEAR RATING

POI Loc. (ft)	Shear Rating Factor	Vehicle Tonnage (Tons)	Rating Tonnage (Tons)	Shear Resistance (kip)	Controlling Equation	φc	φs	DC1 (kip)	DC2 (kip)	DW (kip)	LL (kip)
115.250	7.237	---	---	742.922	Equation 6.10.9.1-1	1.000	1.000	-24.807	-3.564	-2.666	-98.371
125.900	6.693	---	---	747.024	Equation 6.10.9.1-1	1.000	1.000	-46.837	-7.210	-5.394	-102.728
126.750	6.532	---	---	747.024	Equation 6.10.9.1-1	1.000	1.000	-49.063	-7.500	-5.611	-104.846
138.250	5.586	---	---	747.024	Equation 6.10.9.1-1	1.000	1.000	-76.354	-11.474	-8.584	-116.470
146.800	5.182	---	---	747.024	Equation 6.10.9.1-1	1.000	1.000	-93.705	-14.403	-10.774	-121.210
149.750	4.900	---	---	747.024	Equation 6.10.9.1-1	1.000	1.000	-100.732	-15.414	-11.531	-126.405
161.250	4.216	---	---	747.024	Equation 6.10.9.1-1	1.000	1.000	-128.059	-19.389	-14.504	-138.762
167.700	4.697	---	---	831.150	Equation 6.10.9.1-1	1.000	1.000	-140.877	-21.601	-16.159	-138.909
167.900	4.676	---	---	831.150	Equation 6.10.9.1-1	1.000	1.000	-141.289	-21.670	-16.211	-139.432
168.100	3.197	---	---	626.874	Equation 6.10.9.1-1	1.000	1.000	-142.136	-21.736	-16.260	-139.724
172.750	2.909	---	---	626.874	Equation 6.10.9.1-1	1.000	1.000	-152.010	-23.333	-17.455	-149.205

SHEAR RATING

POI Loc. (ft)	Shear Rating Factor	Vehicle Tonnage (Tons)	Rating Tonnage (Tons)	Shear Resistance (kip)	Controlling Equation	φc	φs	DC1 (kip)	DC2 (kip)	DW (kip)	LL (kip)
183.900	8.081	---	---	1557.297	Equation 6.10.9.1-1	1.000	1.000	-176.096	-27.163	-20.320	-165.054
184.100	8.073	---	---	1557.297	Equation 6.10.9.1-1	1.000	1.000	-176.764	-27.237	-20.375	-165.108
184.250	2.767	---	---	684.644	Equation 6.10.9.1-1	1.000	1.000	-178.239	-27.301	-20.423	-165.752
188.600	2.609	---	---	684.644	Equation 6.10.9.1-1	1.000	1.000	-186.653	-28.796	-21.541	-171.580
197.125	2.253	---	---	684.644	Equation 6.10.9.1-1	1.000	1.000	-204.719	-31.727	-23.734	-188.436
209.400	6.386	---	---	1685.625	Equation 6.10.9.1-1	1.000	1.000	-231.686	-35.953	-26.896	-217.840
209.500	6.386	---	---	1685.625	Equation 6.10.9.1-1	1.000	1.000	-231.717	-35.959	-26.900	-217.840
209.600	12.840	---	---	1685.625	Equation 6.10.9.1-1	1.000	1.000	4.853	0.285	0.213	-131.691
210.000	33.335	---	---	1685.625	Equation 6.10.9.1-1	1.000	1.000	3.458	0.148	0.111	50.455

Design Operating (Strength I) **Design Operating**

FLEXURE RATING

Date:	8/2/2021	Span3-5ft-EB.lbsx	
Time:	2:26 PM	Bentley LEAP Bridge Steel [AASHTO LRFD 8th Ed. with 2017 Interims]	v21.00.00.28

POI Loc. (ft)	Moment Rating Factor	Vehicle Tonnage (Tons)	Rating Tonnage (Tons)	Moment/Stress Resistance (kip-in / ksi)	Controlling Equation	φc	φs	DC1 (kip-in / ksi)	DC2 (kip-in / ksi)	DW (kip-ft / ksi)	flDC1 (ksi)	flDC2 (ksi)	flDW (ksi)	LL (kip-in / ksi)	flLL (ksi)
0.000	483.454	---	---	48.881	Equation 6.10.8.1.1-1 lateral torsion buckling	1	1	-0.001	-0.001	-0.001	0.008	0.002	0.001	-0.009	0.276
0.400	23.304	---	---	48.881	Equation 6.10.8.1.1-1 lateral torsion buckling	1	1	-0.009	-0.001	-0.001	0.094	0.013	0.009	-1.879	0.648
0.500	999.990	---	---	232634.188	Equation 6.10.7.1.1-1	1	1	0.000	0.000	0.000	0.000	0.000	0.000	0.000	0.000
0.600	14.951	---	---	48.881	Equation 6.10.8.1.1-1 lateral torsion buckling	1	1	0.152	0.029	0.022	0.104	0.015	0.011	-3.044	0.710
11.500	8.544	---	---	232634.188	Equation 6.10.7.1.1-1	1	1	29028.845	4582.162	3427.774	0.022	0.002	0.001	18723.841	4.109
21.400	4.091	---	---	232634.188	Equation 6.10.7.1.1-1	1	1	52424.329	8272.291	6188.244	-0.052	-0.010	-0.008	32503.010	8.493
23.000	3.715	---	---	232634.188	Equation 6.10.7.1.1-1	1	1	55973.950	8828.894	6604.622	-0.073	-0.012	-0.009	34820.604	9.196
25.900	3.110	---	---	232634.188	Equation 6.10.7.1.1-1	1	1	62222.374	9800.571	7331.503	-0.146	-0.012	-0.009	38842.232	11.402
26.100	4.439	---	---	291248.988	Equation 6.10.7.1.1-1	1	1	62642.080	9896.153	7403.005	-0.088	-0.007	-0.005	39111.488	6.454

Date:	8/2/2021	Span3-5ft-EB.lbsx	
Time:	2:26 PM	Bentley LEAP Bridge Steel [AASHTO LRFD 8th Ed. with 2017 Interims]	v21.00.00.28

FLEXURE RATING

POI Loc. (ft)	Moment Rating Factor	Vehicle Tonnage (Tons)	Rating Tonnage (Tons)	Moment/Stress Resistance (kip-in / ksi)	Controlling Equation	φc	φs	DC1 (kip-in / ksi)	DC2 (kip-in / ksi)	DW (kip-ft / ksi)	flDC1 (ksi)	flDC2 (ksi)	flDW (ksi)	LL (kip-in / ksi)	flLL (ksi)
34.500	3.681	---	---	291248.988	Equation 6.10.7.1.1-1	1	1	79456.655	12526.906	9370.991	-0.152	0.004	0.003	49184.243	1.860
41.900	2.849	---	---	291248.988	Equation 6.10.7.1.1-1	1	1	92747.719	14588.504	10913.208	-0.209	0.016	0.012	56909.871	3.046
42.100	4.686	---	---	395608.291	Equation 6.10.7.1.1-1	1	1	93089.667	14672.035	10975.693	-0.063	0.005	0.004	57114.671	0.982
42.300	4.658	---	---	395608.291	Equation 6.10.7.1.1-1	1	1	93427.703	14723.833	11014.443	-0.062	0.005	0.004	57283.378	1.027
46.000	4.164	---	---	395608.291	Equation 6.10.7.1.1-1	1	1	99490.358	15664.630	11718.224	-0.049	0.007	0.005	60781.428	1.892
57.500	3.377	---	---	395608.291	Equation 6.10.7.1.1-1	1	1	116014.185	18222.718	13631.849	-0.100	0.008	0.006	70682.220	1.355
63.200	3.118	---	---	395608.291	Equation 6.10.7.1.1-1	1	1	122847.123	19282.748	14424.826	-0.090	0.009	0.007	74373.997	1.163
69.000	2.881	---	---	395608.291	Equation 6.10.7.1.1-1	1	1	128875.161	20235.317	15137.413	-0.058	0.010	0.007	78011.100	1.190
80.500	2.557	---	---	395608.291	Equation 6.10.7.1.1-1	1	1	138264.798	21692.239	16227.292	-0.125	0.011	0.009	83404.566	1.233
84.100	2.488	---	---	395608.291	Equation 6.10.7.1.1-1	1	1	140451.673	22031.677	16481.215	-0.121	0.012	0.009	84555.852	1.295
92.000	2.367	---	---	395608.291	Equation 6.10.7.1.1-1	1	1	143993.426	22596.439	16903.695	-0.071	0.012	0.009	86327.532	1.726

Date:	8/2/2021	Span3-5ft-EB.lbsx	
Time:	2:26 PM	Bentley LEAP Bridge Steel [AASHTO LRFD 8th Ed. with 2017 Interims]	v21.00.00.28

FLEXURE RATING

POI Loc. (ft)	Moment Rating Factor	Vehicle Tonnage (Tons)	Rating Tonnage (Tons)	Moment/Stress Resistance (kip-in / ksi)	Controlling Equation	φc	φs	DC1 (kip-in / ksi)	DC2 (kip-in / ksi)	DW (kip-ft / ksi)	flDC1 (ksi)	flDC2 (ksi)	flDW (ksi)	LL (kip-in / ksi)	flLL (ksi)
103.625	2.301	---	---	395608.291	Equation 6.10.7.1.1-1	1	1	146279.011	22942.948	17162.908	-0.141	0.013	0.010	88048.782	1.479
105.000	2.303	---	---	395608.291	Equation 6.10.7.1.1-1	1	1	146301.166	22946.464	17165.537	-0.140	0.013	0.010	87947.725	1.483
115.250	2.340	---	---	395608.291	Equation 6.10.7.1.1-1	1	1	144846.503	22729.033	17002.884	-0.067	0.011	0.008	87160.698	1.585
125.900	2.474	---	---	395608.291	Equation 6.10.7.1.1-1	1	1	140450.125	22031.386	16480.995	-0.129	0.012	0.009	84729.215	1.458
126.750	2.486	---	---	395608.291	Equation 6.10.7.1.1-1	1	1	139965.216	21956.639	16425.081	-0.129	0.012	0.009	84535.812	1.460
138.250	2.770	---	---	395608.291	Equation 6.10.7.1.1-1	1	1	131422.932	20631.468	15433.761	-0.058	0.009	0.007	79356.834	1.560
146.800	3.131	---	---	395608.291	Equation 6.10.7.1.1-1	1	1	122842.431	19281.440	14423.848	-0.100	0.009	0.007	74599.291	0.880
149.750	3.282	---	---	395608.291	Equation 6.10.7.1.1-1	1	1	119413.692	18749.312	14025.779	-0.101	0.008	0.006	72755.010	0.708
161.250	4.042	---	---	395608.291	Equation 6.10.7.1.1-1	1	1	103742.290	16320.338	12208.739	-0.043	0.005	0.004	63561.024	0.802
167.700	4.660	---	---	395608.291	Equation 6.10.7.1.1-1	1	1	93417.021	14716.470	11008.935	-0.074	0.006	0.004	57698.546	0.805
167.900	4.676	---	---	395608.291	Equation 6.10.7.1.1-1	1	1	93078.849	14664.613	10970.142	-0.075	0.006	0.004	57539.801	0.828

Date:	8/2/2021	Span3-5ft-EB.lbsx	
Time:	2:26 PM	Bentley LEAP Bridge Steel [AASHTO LRFD 8th Ed. with 2017 Interims]	v21.00.00.28

FLEXURE RATING

POI Loc. (ft)	Moment Rating Factor	Vehicle Tonnage (Tons)	Rating Tonnage (Tons)	Moment/Stress Resistance (kip-in / ksi)	Controlling Equation	φc	φs	DC1 (kip-in / ksi)	DC2 (kip-in / ksi)	DW (kip-ft / ksi)	flDC1 (ksi)	flDC2 (ksi)	flDW (ksi)	LL (kip-in / ksi)	flLL (ksi)
168.100	2.850	---	---	291248.988	Equation 6.10.7.1.1-1	1	1	92736.752	14580.384	10907.133	-0.238	0.018	0.013	57356.108	2.657
172.750	3.165	---	---	291248.988	Equation 6.10.7.1.1-1	1	1	84546.733	13311.935	9958.246	-0.206	0.016	0.012	52839.297	4.046
183.900	4.053	---	---	291248.988	Equation 6.10.7.1.1-1	1	1	62621.494	9887.715	7396.692	-0.130	0.015	0.011	40027.001	9.214
184.100	2.810	---	---	232634.188	Equation 6.10.7.1.1-1	1	1	62199.350	9794.615	7327.048	-0.218	0.025	0.019	39878.762	16.052
184.250	3.092	---	---	232634.188	Equation 6.10.7.1.1-1	1	1	61881.921	9737.901	7284.621	-0.153	0.017	0.013	39674.286	10.961
188.600	3.912	---	---	232634.188	Equation 6.10.7.1.1-1	1	1	52394.014	8252.770	6173.642	-0.096	0.016	0.012	33952.372	8.941
197.125	7.135	---	---	232634.188	Equation 6.10.7.1.1-1	1	1	32412.785	5099.515	3814.789	-0.004	0.015	0.011	21852.940	4.939
209.400	191.987	---	---	232634.188	Equation 6.10.7.1.1-1	1	1	363.360	61.200	45.782	0.130	0.015	0.011	280.150	0.842
209.500	999.990	---	---	232634.188	Equation 6.10.7.1.1-1	1	1	0.000	0.000	0.000	0.000	0.000	0.000	0.000	0.000
209.600	155.362	---	---	48.881	Equation 6.10.8.1.1-1 lateral torsion buckling	1	1	-0.009	0.001	0.001	0.103	0.012	0.009	-0.071	0.730

Date:	8/2/2021	Span3-5ft-EB.lbsx	
Time:	2:26 PM	Bentley LEAP Bridge Steel [AASHTO LRFD 8th Ed. with 2017 Interims]	v21.00.00.28

FLEXURE RATING

POI Loc. (ft)	Moment Rating Factor	Vehicle Tonnage (Tons)	Rating Tonnage (Tons)	Moment/Stress Resistance (kip-in / ksi)	Controlling Equation	φc	φs	DC1 (kip-in / ksi)	DC2 (kip-in / ksi)	DW (kip-ft / ksi)	flDC1 (ksi)	flDC2 (ksi)	flDW (ksi)	LL (kip-in / ksi)	flLL (ksi)
210.000	417.824	---	---	48.881	Equation 6.10.8.1.1-1 lateral torsion buckling	1	1	-0.001	-0.001	-0.001	0.010	0.001	0.001	-0.015	0.306

SHEAR RATING

POI Loc. (ft)	Shear Rating Factor	Vehicle Tonnage (Tons)	Rating Tonnage (Tons)	Shear Resistance (kip)	Controlling Equation	φc	φs	DC1 (kip)	DC2 (kip)	DW (kip)	LL (kip)
0.000	53.213	---	---	1685.625	Equation 6.10.9.1-1	1.000	1.000	-3.467	-0.145	-0.108	-31.607
0.400	15.328	---	---	1685.625	Equation 6.10.9.1-1	1.000	1.000	-4.863	-0.286	-0.214	110.321
0.500	7.601	---	---	1685.625	Equation 6.10.9.1-1	1.000	1.000	231.887	35.911	26.864	182.998
0.600	7.601	---	---	1685.625	Equation 6.10.9.1-1	1.000	1.000	231.856	35.905	26.859	182.998
11.500	2.960	---	---	761.178	Equation 6.10.9.1-1	1.000	1.000	207.800	32.154	24.053	167.991
21.400	3.619	---	---	761.178	Equation 6.10.9.1-1	1.000	1.000	186.628	28.754	21.510	144.857
23.000	3.630	---	---	761.178	Equation 6.10.9.1-1	1.000	1.000	183.793	28.202	21.097	145.463

SHEAR RATING

POI Loc. (ft)	Shear Rating Factor	Vehicle Tonnage (Tons)	Rating Tonnage (Tons)	Shear Resistance (kip)	Controlling Equation	φc	φs	DC1 (kip)	DC2 (kip)	DW (kip)	LL (kip)
25.900	6.202	---	---	1124.840	Equation 6.10.9.1-1	1.000	1.000	176.866	27.202	20.349	145.193
26.100	6.223	---	---	1124.840	Equation 6.10.9.1-1	1.000	1.000	176.109	27.135	20.299	144.832
34.500	3.704	---	---	678.990	Equation 6.10.9.1-1	1.000	1.000	157.772	24.250	18.141	129.275
41.900	4.233	---	---	678.990	Equation 6.10.9.1-1	1.000	1.000	142.050	21.709	16.240	117.880
42.100	6.171	---	---	904.929	Equation 6.10.9.1-1	1.000	1.000	141.214	21.644	16.191	117.629
42.300	6.199	---	---	904.929	Equation 6.10.9.1-1	1.000	1.000	140.802	21.575	16.140	117.178
46.000	5.038	---	---	747.024	Equation 6.10.9.1-1	1.000	1.000	134.065	20.305	15.190	114.626
57.500	5.944	---	---	747.024	Equation 6.10.9.1-1	1.000	1.000	106.918	16.331	12.217	102.893
63.200	6.708	---	---	747.024	Equation 6.10.9.1-1	1.000	1.000	93.749	14.376	10.754	93.647
69.000	6.726	---	---	747.024	Equation 6.10.9.1-1	1.000	1.000	82.283	12.392	9.270	95.610
80.500	7.846	---	---	747.024	Equation 6.10.9.1-1	1.000	1.000	55.217	8.423	6.301	86.297

SHEAR RATING

POI Loc. (ft)	Shear Rating Factor	Vehicle Tonnage (Tons)	Rating Tonnage (Tons)	Shear Resistance (kip)	Controlling Equation	φc	φs	DC1 (kip)	DC2 (kip)	DW (kip)	LL (kip)
84.100	8.431	---	---	747.024	Equation 6.10.9.1-1	1.000	1.000	46.850	7.188	5.377	81.560
92.000	8.768	---	---	742.922	Equation 6.10.9.1-1	1.000	1.000	30.730	4.486	3.356	80.328
103.625	10.480	---	---	742.922	Equation 6.10.9.1-1	1.000	1.000	3.400	0.475	0.355	70.487
105.000	10.964	---	---	742.922	Equation 6.10.9.1-1	1.000	1.000	-0.056	-0.025	-0.018	67.766
115.250	9.381	---	---	742.922	Equation 6.10.9.1-1	1.000	1.000	-24.807	-3.564	-2.666	-75.886
125.900	8.676	---	---	747.024	Equation 6.10.9.1-1	1.000	1.000	-46.837	-7.210	-5.394	-79.248
126.750	8.467	---	---	747.024	Equation 6.10.9.1-1	1.000	1.000	-49.063	-7.500	-5.611	-80.881
138.250	7.241	---	---	747.024	Equation 6.10.9.1-1	1.000	1.000	-76.354	-11.474	-8.584	-89.848
146.800	6.718	---	---	747.024	Equation 6.10.9.1-1	1.000	1.000	-93.705	-14.403	-10.774	-93.505
149.750	6.351	---	---	747.024	Equation 6.10.9.1-1	1.000	1.000	-100.732	-15.414	-11.531	-97.513
161.250	5.466	---	---	747.024	Equation 6.10.9.1-1	1.000	1.000	-128.059	-19.389	-14.504	-107.045

SHEAR RATING

POI Loc. (ft)	Shear Rating Factor	Vehicle Tonnage (Tons)	Rating Tonnage (Tons)	Shear Resistance (kip)	Controlling Equation	φc	φs	DC1 (kip)	DC2 (kip)	DW (kip)	LL (kip)
167.700	6.089	---	---	831.150	Equation 6.10.9.1-1	1.000	1.000	-140.877	-21.601	-16.159	-107.158
167.900	6.061	---	---	831.150	Equation 6.10.9.1-1	1.000	1.000	-141.289	-21.670	-16.211	-107.562
168.100	4.145	---	---	626.874	Equation 6.10.9.1-1	1.000	1.000	-142.136	-21.736	-16.260	-107.787
172.750	3.771	---	---	626.874	Equation 6.10.9.1-1	1.000	1.000	-152.010	-23.333	-17.455	-115.101
183.900	10.475	---	---	1557.297	Equation 6.10.9.1-1	1.000	1.000	-176.096	-27.163	-20.320	-127.327
184.100	10.465	---	---	1557.297	Equation 6.10.9.1-1	1.000	1.000	-176.764	-27.237	-20.375	-127.369
184.250	3.587	---	---	684.644	Equation 6.10.9.1-1	1.000	1.000	-178.239	-27.301	-20.423	-127.866
188.600	3.382	---	---	684.644	Equation 6.10.9.1-1	1.000	1.000	-186.653	-28.796	-21.541	-132.362
197.125	2.920	---	---	684.644	Equation 6.10.9.1-1	1.000	1.000	-204.719	-31.727	-23.734	-145.365
209.400	8.278	---	---	1685.625	Equation 6.10.9.1-1	1.000	1.000	-231.686	-35.953	-26.896	-168.048
209.500	8.278	---	---	1685.625	Equation 6.10.9.1-1	1.000	1.000	-231.717	-35.959	-26.900	-168.048

SHEAR RATING

POI Loc. (ft)	Shear Rating Factor	Vehicle Tonnage (Tons)	Rating Tonnage (Tons)	Shear Resistance (kip)	Controlling Equation	φc	φs	DC1 (kip)	DC2 (kip)	DW (kip)	LL (kip)
209.600	16.645	---	---	1685.625	Equation 6.10.9.1-1	1.000	1.000	4.853	0.285	0.213	-101.590
210.000	43.212	---	---	1685.625	Equation 6.10.9.1-1	1.000	1.000	3.458	0.148	0.111	38.923

SUMMARY REPORT

Load Rating Combination	Controlling POI Loc. (ft)	Based on	Controlling Equation	Rating Factor	Vehicle Tonnage (Tons)	Rating Tonnage (Tons)
Design Inventory	103.625	Flexure	Equation 6.10.7.1.1-1	1.774	---	---
Design Operating	103.625	Flexure	Equation 6.10.7.1.1-1	2.301	---	---
Permit	103.625	Flexure	Equation 6.10.7.1.1-1	2.150	59.995	128.995

Group01 Member 04

Design Inventory (Strength I) Permit

FLEXURE RATING

POI Loc. (ft)	Moment Rating Factor	Vehicle Tonnage (Tons)	Rating Tonnage (Tons)	Moment/Stress Resistance (kip-in / ksi)	Controlling Equation	φc	φs	DC1 (kip-in / ksi)	DC2 (kip-in / ksi)	DW (kip-ft / ksi)	flDC1 (ksi)	flDC2 (ksi)	flDW (ksi)	LL (kip-in / ksi)	flLL (ksi)

Date:	8/2/2021	Span3-5ft-EB.lbsx	
Time:	2:26 PM	Bentley LEAP Bridge Steel [AASHTO LRFD 8th Ed. with 2017 Interims]	v21.00.00.28

FLEXURE RATING

POI Loc. (ft)	Moment Rating Factor	Vehicle Tonnage (Tons)	Rating Tonnage (Tons)	Moment/Stress Resistance (kip-in / ksi)	Controlling Equation	φc	φs	DC1 (kip-in / ksi)	DC2 (kip-in / ksi)	DW (kip-ft / ksi)	flDC1 (ksi)	flDC2 (ksi)	flDW (ksi)	LL (kip-in / ksi)	flLL (ksi)
0.000	460.352	59.995	27618.816	48.881	Equation 6.10.8.1.1-1 lateral torsion buckling	1	1	0.000	0.000	0.000	-0.009	-0.001	-0.001	-0.009	0.291
0.400	17.744	59.995	1064.522	48.881	Equation 6.10.8.1.1-1 lateral torsion buckling	1	1	-0.003	0.001	0.001	-0.089	-0.017	-0.013	-2.463	0.870
0.500	999.990	59.995	59994.402	229125.880	Equation 6.10.7.1.1-1	1	1	0.000	0.000	0.000	0.000	0.000	0.000	0.000	0.000
0.600	11.403	59.995	684.095	48.881	Equation 6.10.8.1.1-1 lateral torsion buckling	1	1	0.171	0.006	0.005	-0.102	-0.019	-0.014	-3.975	0.973
11.500	7.074	59.995	424.382	229125.880	Equation 6.10.7.1.1-1	1	1	28148.492	4456.816	3334.006	-0.108	-0.012	-0.009	23550.426	3.710
21.400	3.415	59.995	204.888	229125.880	Equation 6.10.7.1.1-1	1	1	50961.162	8034.943	6010.692	-0.108	-0.006	-0.004	40602.302	7.895
23.000	3.085	59.995	185.097	229125.880	Equation 6.10.7.1.1-1	1	1	54438.696	8576.293	6415.659	-0.124	-0.005	-0.004	43766.892	8.557
25.900	2.597	59.995	155.801	229125.880	Equation 6.10.7.1.1-1	1	1	60554.582	9538.438	7135.410	-0.189	-0.001	-0.001	48576.078	10.808
26.100	3.662	59.995	219.696	286159.759	Equation 6.10.7.1.1-1	1	1	60963.644	9582.565	7168.419	-0.114	0.000	0.000	48888.927	6.110

Date:	8/2/2021	Span3-5ft-EB.lbsx	
Time:	2:26 PM	Bentley LEAP Bridge Steel [AASHTO LRFD 8th Ed. with 2017 Interims]	v21.00.00.28

FLEXURE RATING

POI Loc. (ft)	Moment Rating Factor	Vehicle Tonnage (Tons)	Rating Tonnage (Tons)	Moment/Stress Resistance (kip-in / ksi)	Controlling Equation	φc	φs	DC1 (kip-in / ksi)	DC2 (kip-in / ksi)	DW (kip-ft / ksi)	flDC1 (ksi)	flDC2 (ksi)	flDW (ksi)	LL (kip-in / ksi)	flLL (ksi)
34.500	2.901	59.995	174.031	286159.759	Equation 6.10.7.1.1-1	1	1	77516.178	12150.015	9089.049	-0.147	0.009	0.007	61892.029	2.104
41.900	2.246	59.995	134.733	286159.759	Equation 6.10.7.1.1-1	1	1	90718.529	14181.964	10609.088	-0.166	0.017	0.012	72530.276	2.760
42.100	3.419	59.995	205.128	370690.549	Equation 6.10.7.1.1-1	1	1	91059.633	14212.677	10632.063	-0.049	0.005	0.004	72755.383	0.880
42.300	3.402	59.995	204.106	370690.549	Equation 6.10.7.1.1-1	1	1	91396.879	14264.704	10670.982	-0.048	0.005	0.004	72941.132	0.911
46.000	3.101	59.995	186.046	370690.549	Equation 6.10.7.1.1-1	1	1	97467.825	15188.987	11362.411	-0.028	0.005	0.004	76352.382	1.618
57.500	2.444	59.995	146.648	370690.549	Equation 6.10.7.1.1-1	1	1	113794.081	17701.992	13242.311	-0.096	0.009	0.006	89727.750	1.368
63.200	2.224	59.995	133.410	370690.549	Equation 6.10.7.1.1-1	1	1	120648.224	18748.543	14025.204	-0.091	0.009	0.007	95125.032	1.309
69.000	2.035	59.995	122.070	370690.549	Equation 6.10.7.1.1-1	1	1	126778.483	19665.425	14711.095	-0.066	0.009	0.007	100279.944	1.391
80.500	1.780	59.995	106.800	370690.549	Equation 6.10.7.1.1-1	1	1	136012.141	21088.556	15775.693	-0.132	0.012	0.009	108352.566	1.401
84.100	1.725	59.995	103.500	370690.549	Equation 6.10.7.1.1-1	1	1	138216.050	21424.953	16027.342	-0.127	0.012	0.009	110184.273	1.455
92.000	1.632	59.995	97.901	370690.549	Equation 6.10.7.1.1-1	1	1	141905.311	21968.326	16433.824	-0.074	0.010	0.008	113324.670	1.744

Date:	8/2/2021	Span3-5ft-EB.lbsx	
Time:	2:26 PM	Bentley LEAP Bridge Steel [AASHTO LRFD 8th Ed. with 2017 Interims]	v21.00.00.28

FLEXURE RATING

POI Loc. (ft)	Moment Rating Factor	Vehicle Tonnage (Tons)	Rating Tonnage (Tons)	Moment/Stress Resistance (kip-in / ksi)	Controlling Equation	φc	φs	DC1 (kip-in / ksi)	DC2 (kip-in / ksi)	DW (kip-ft / ksi)	flDC1 (ksi)	flDC2 (ksi)	flDW (ksi)	LL (kip-in / ksi)	flLL (ksi)
103.625	1.591	59.995	95.457	370690.549	Equation 6.10.7.1.1-1	1	1	144028.241	22310.856	16690.058	-0.147	0.014	0.010	114786.396	1.606
105.000	1.599	59.995	95.946	370690.549	Equation 6.10.7.1.1-1	1	1	144052.515	22314.844	16693.042	-0.146	0.014	0.010	114152.694	1.614
115.250	1.624	59.995	97.414	370690.549	Equation 6.10.7.1.1-1	1	1	142760.331	22101.006	16533.076	-0.070	0.010	0.007	113459.130	1.630
125.900	1.722	59.995	103.327	370690.549	Equation 6.10.7.1.1-1	1	1	138201.848	21427.607	16029.328	-0.136	0.013	0.010	110200.948	1.544
126.750	1.730	59.995	103.817	370690.549	Equation 6.10.7.1.1-1	1	1	137715.615	21352.791	15973.359	-0.136	0.013	0.010	110026.512	1.542
138.250	1.930	59.995	115.769	370690.549	Equation 6.10.7.1.1-1	1	1	129330.444	20061.139	15007.116	-0.063	0.008	0.006	104023.926	1.488
146.800	2.167	59.995	129.996	370690.549	Equation 6.10.7.1.1-1	1	1	120622.377	18754.688	14029.799	-0.102	0.009	0.007	98228.732	1.027
149.750	2.275	59.995	136.465	370690.549	Equation 6.10.7.1.1-1	1	1	117190.165	18230.715	13637.833	-0.101	0.008	0.006	95646.744	0.891
161.250	2.859	59.995	171.539	370690.549	Equation 6.10.7.1.1-1	1	1	101708.620	15851.805	11858.243	-0.031	0.004	0.003	82819.746	0.790
167.700	3.310	59.995	198.591	370690.549	Equation 6.10.7.1.1-1	1	1	91366.907	14278.762	10681.499	-0.069	0.007	0.005	74876.983	0.977
167.900	3.324	59.995	199.401	370690.549	Equation 6.10.7.1.1-1	1	1	91029.780	14226.792	10642.622	-0.070	0.007	0.005	74660.810	0.993

Date:	8/2/2021	Span3-5ft-EB.lbsx	
Time:	2:26 PM	Bentley LEAP Bridge Steel [AASHTO LRFD 8th Ed. with 2017 Interims]	v21.00.00.28

FLEXURE RATING

POI Loc. (ft)	Moment Rating Factor	Vehicle Tonnage (Tons)	Rating Tonnage (Tons)	Moment/Stress Resistance (kip-in / ksi)	Controlling Equation	φc	φs	DC1 (kip-in / ksi)	DC2 (kip-in / ksi)	DW (kip-ft / ksi)	flDC1 (ksi)	flDC2 (ksi)	flDW (ksi)	LL (kip-in / ksi)	flLL (ksi)
168.100	2.178	59.995	130.642	286159.759	Equation 6.10.7.1.1-1	1	1	90689.070	14197.159	10620.454	-0.225	0.021	0.016	74378.955	3.169
172.750	2.486	59.995	149.149	286159.759	Equation 6.10.7.1.1-1	1	1	82553.389	12946.967	9685.223	-0.202	0.022	0.016	67513.136	4.166
183.900	3.415	59.995	204.877	286159.759	Equation 6.10.7.1.1-1	1	1	60972.989	9600.570	7181.889	-0.142	0.022	0.016	49440.796	8.828
184.100	2.403	59.995	144.169	229125.880	Equation 6.10.7.1.1-1	1	1	60560.330	9555.739	7148.353	-0.238	0.038	0.028	49105.570	15.392
184.250	2.608	59.995	156.484	229125.880	Equation 6.10.7.1.1-1	1	1	60249.407	9514.102	7117.204	-0.169	0.025	0.019	48839.760	10.400
188.600	3.295	59.995	197.670	229125.880	Equation 6.10.7.1.1-1	1	1	50934.026	8064.732	6032.976	-0.140	0.018	0.014	41847.544	8.431
197.125	6.147	59.995	368.790	229125.880	Equation 6.10.7.1.1-1	1	1	31425.138	5010.622	3748.291	-0.128	0.001	0.001	26179.513	4.543
209.400	144.255	59.995	8654.576	229125.880	Equation 6.10.7.1.1-1	1	1	368.281	60.500	45.258	-0.118	-0.026	-0.020	333.384	1.145
209.500	999.990	59.995	59994.402	229125.880	Equation 6.10.7.1.1-1	1	1	0.000	0.000	0.000	0.000	0.000	0.000	0.000	0.000
209.600	112.409	59.995	6743.980	48.881	Equation 6.10.8.1.1-1 lateral torsion buckling	1	1	-0.002	-0.001	-0.001	-0.094	-0.021	-0.015	-0.122	0.936

Date:	8/2/2021	Span3-5ft-EB.lbsx	
Time:	2:26 PM	Bentley LEAP Bridge Steel [AASHTO LRFD 8th Ed. with 2017 Interims]	v21.00.00.28

FLEXURE RATING

POI Loc. (ft)	Moment Rating Factor	Vehicle Tonnage (Tons)	Rating Tonnage (Tons)	Moment/Stress Resistance (kip-in / ksi)	Controlling Equation	φc	φs	DC1 (kip-in / ksi)	DC2 (kip-in / ksi)	DW (kip-ft / ksi)	flDC1 (ksi)	flDC2 (ksi)	flDW (ksi)	LL (kip-in / ksi)	flLL (ksi)
210.000	443.150	59.995	26586.793	48.881	Equation 6.10.8.1.1-1 lateral torsion buckling	1	1	0.000	0.001	0.000	-0.008	-0.002	-0.002	-0.003	0.321

SHEAR RATING

POI Loc. (ft)	Shear Rating Factor	Vehicle Tonnage (Tons)	Rating Tonnage (Tons)	Shear Resistance (kip)	Controlling Equation	φc	φs	DC1 (kip)	DC2 (kip)	DW (kip)	LL (kip)
0.000	31.687	59.995	1901.035	1685.625	Equation 6.10.9.1-1	1.000	1.000	-0.498	0.116	0.087	-53.188
0.400	13.435	59.995	806.026	1685.625	Equation 6.10.9.1-1	1.000	1.000	-1.674	-0.017	-0.012	125.593
0.500	6.817	59.995	408.958	1685.625	Equation 6.10.9.1-1	1.000	1.000	223.682	36.129	27.027	205.205
0.600	6.816	59.995	408.949	1685.625	Equation 6.10.9.1-1	1.000	1.000	223.654	36.123	27.022	205.215
11.500	2.617	59.995	156.979	761.178	Equation 6.10.9.1-1	1.000	1.000	201.820	32.360	24.207	192.159
21.400	3.013	59.995	180.783	761.178	Equation 6.10.9.1-1	1.000	1.000	182.665	28.934	21.645	175.201
23.000	3.041	59.995	182.460	761.178	Equation 6.10.9.1-1	1.000	1.000	179.793	28.383	21.232	174.852

SHEAR RATING

POI Loc. (ft)	Shear Rating Factor	Vehicle Tonnage (Tons)	Rating Tonnage (Tons)	Shear Resistance (kip)	Controlling Equation	φc	φs	DC1 (kip)	DC2 (kip)	DW (kip)	LL (kip)
25.900	5.505	59.995	330.248	1124.840	Equation 6.10.9.1-1	1.000	1.000	173.316	27.377	20.480	164.166
26.100	5.510	59.995	330.565	1124.840	Equation 6.10.9.1-1	1.000	1.000	172.599	27.306	20.426	164.161
34.500	2.955	59.995	177.263	678.990	Equation 6.10.9.1-1	1.000	1.000	155.974	24.400	18.253	162.581
41.900	3.410	59.995	204.567	678.990	Equation 6.10.9.1-1	1.000	1.000	141.759	21.839	16.337	146.362
42.100	4.965	59.995	297.860	904.929	Equation 6.10.9.1-1	1.000	1.000	140.964	21.766	16.283	146.214
42.300	4.978	59.995	298.664	904.929	Equation 6.10.9.1-1	1.000	1.000	140.593	21.697	16.231	145.919
46.000	4.011	59.995	240.658	747.024	Equation 6.10.9.1-1	1.000	1.000	132.996	20.417	15.273	144.177
57.500	4.476	59.995	268.522	747.024	Equation 6.10.9.1-1	1.000	1.000	106.609	16.455	12.310	136.659
63.200	4.881	59.995	292.859	747.024	Equation 6.10.9.1-1	1.000	1.000	94.602	14.482	10.833	128.469
69.000	5.174	59.995	310.443	747.024	Equation 6.10.9.1-1	1.000	1.000	82.181	12.467	9.326	124.273
80.500	5.694	59.995	341.610	747.024	Equation 6.10.9.1-1	1.000	1.000	55.214	8.505	6.363	118.887

SHEAR RATING

POI Loc. (ft)	Shear Rating Factor	Vehicle Tonnage (Tons)	Rating Tonnage (Tons)	Shear Resistance (kip)	Controlling Equation	φc	φs	DC1 (kip)	DC2 (kip)	DW (kip)	LL (kip)
84.100	6.080	59.995	364.760	747.024	Equation 6.10.9.1-1	1.000	1.000	47.581	7.258	5.429	112.956
92.000	6.982	59.995	418.890	742.922	Equation 6.10.9.1-1	1.000	1.000	30.786	4.514	3.377	100.865
103.625	7.831	59.995	469.821	742.922	Equation 6.10.9.1-1	1.000	1.000	3.382	0.511	0.382	94.324
105.000	8.088	59.995	485.243	742.922	Equation 6.10.9.1-1	1.000	1.000	0.349	0.033	0.025	91.804
115.250	7.794	59.995	467.619	742.922	Equation 6.10.9.1-1	1.000	1.000	-24.889	-3.524	-2.637	-91.332
125.900	6.823	59.995	409.360	747.024	Equation 6.10.9.1-1	1.000	1.000	-47.037	-7.217	-5.399	-100.740
126.750	6.684	59.995	401.003	747.024	Equation 6.10.9.1-1	1.000	1.000	-49.090	-7.514	-5.621	-102.454
138.250	5.705	59.995	342.244	747.024	Equation 6.10.9.1-1	1.000	1.000	-76.316	-11.471	-8.581	-114.059
146.800	5.240	59.995	314.386	747.024	Equation 6.10.9.1-1	1.000	1.000	-94.090	-14.433	-10.797	-119.786
149.750	4.854	59.995	291.228	747.024	Equation 6.10.9.1-1	1.000	1.000	-100.517	-15.455	-11.561	-127.620
161.250	4.155	59.995	249.260	747.024	Equation 6.10.9.1-1	1.000	1.000	-127.215	-19.413	-14.522	-141.016

SHEAR RATING

POI Loc. (ft)	Shear Rating Factor	Vehicle Tonnage (Tons)	Rating Tonnage (Tons)	Shear Resistance (kip)	Controlling Equation	φc	φs	DC1 (kip)	DC2 (kip)	DW (kip)	LL (kip)
167.700	4.427	59.995	265.574	831.150	Equation 6.10.9.1-1	1.000	1.000	-140.445	-21.647	-16.194	-147.486
167.900	4.414	59.995	264.826	831.150	Equation 6.10.9.1-1	1.000	1.000	-140.817	-21.716	-16.245	-147.791
168.100	3.023	59.995	181.337	626.874	Equation 6.10.9.1-1	1.000	1.000	-141.623	-21.788	-16.299	-147.944
172.750	2.871	59.995	172.217	626.874	Equation 6.10.9.1-1	1.000	1.000	-150.549	-23.396	-17.502	-151.689
183.900	8.191	59.995	491.434	1557.297	Equation 6.10.9.1-1	1.000	1.000	-172.363	-27.253	-20.387	-163.259
184.100	8.179	59.995	490.702	1557.297	Equation 6.10.9.1-1	1.000	1.000	-172.991	-27.317	-20.435	-163.412
184.250	2.828	59.995	169.647	684.644	Equation 6.10.9.1-1	1.000	1.000	-174.789	-27.360	-20.467	-163.395
188.600	2.743	59.995	164.570	684.644	Equation 6.10.9.1-1	1.000	1.000	-182.875	-28.864	-21.592	-164.529
197.125	2.425	59.995	145.485	684.644	Equation 6.10.9.1-1	1.000	1.000	-199.204	-31.810	-23.796	-177.254
209.400	7.333	59.995	439.967	1685.625	Equation 6.10.9.1-1	1.000	1.000	-223.670	-36.045	-26.964	-190.764
209.500	7.334	59.995	439.991	1685.625	Equation 6.10.9.1-1	1.000	1.000	-223.698	-36.050	-26.968	-190.748

Date:	8/2/2021	Span3-5ft-EB.lbsx	
Time:	2:26 PM	Bentley LEAP Bridge Steel [AASHTO LRFD 8th Ed. with 2017 Interims]	v21.00.00.28

SHEAR RATING

POI Loc. (ft)	Shear Rating Factor	Vehicle Tonnage (Tons)	Rating Tonnage (Tons)	Shear Resistance (kip)	Controlling Equation	φc	φs	DC1 (kip)	DC2 (kip)	DW (kip)	LL (kip)
209.600	14.527	59.995	871.519	1685.625	Equation 6.10.9.1-1	1.000	1.000	1.696	0.018	0.014	-116.157
210.000	29.543	59.995	1772.412	1685.625	Equation 6.10.9.1-1	1.000	1.000	0.520	-0.120	-0.089	57.047

Design Inventory (Strength I) **Design Inventory**

FLEXURE RATING

POI Loc. (ft)	Moment Rating Factor	Vehicle Tonnage (Tons)	Rating Tonnage (Tons)	Moment/Stress Resistance (kip-in / ksi)	Controlling Equation	φc	φs	DC1 (kip-in / ksi)	DC2 (kip-in / ksi)	DW (kip-ft / ksi)	flDC1 (ksi)	flDC2 (ksi)	flDW (ksi)	LL (kip-in / ksi)	flLL (ksi)
0.000	350.115	---	---	48.881	Equation 6.10.8.1.1-1 lateral torsion buckling	1	1	0.000	0.000	0.000	-0.009	-0.001	-0.001	-0.010	0.390
0.400	12.790	---	---	48.881	Equation 6.10.8.1.1-1 lateral torsion buckling	1	1	-0.003	0.001	0.001	-0.090	-0.017	-0.013	-3.436	1.146
0.500	999.990	---	---	229125.880	Equation 6.10.7.1.1-1	1	1	0.000	0.000	0.000	0.000	0.000	0.000	0.000	0.000

Date:	8/2/2021	Span3-5ft-EB.lbsx	
Time:	2:26 PM	Bentley LEAP Bridge Steel [AASHTO LRFD 8th Ed. with 2017 Interims]	v21.00.00.28

FLEXURE RATING

POI Loc. (ft)	Moment Rating Factor	Vehicle Tonnage (Tons)	Rating Tonnage (Tons)	Moment/Stress Resistance (kip-in / ksi)	Controlling Equation	φc	φs	DC1 (kip-in / ksi)	DC2 (kip-in / ksi)	DW (kip-ft / ksi)	flDC1 (ksi)	flDC2 (ksi)	flDW (ksi)	LL (kip-in / ksi)	flLL (ksi)
0.600	8.172	---	---	48.881	Equation 6.10.8.1.1-1 lateral torsion buckling	1	1	0.171	0.006	0.005	-0.102	-0.019	-0.014	-5.575	1.268
11.500	6.162	---	---	229125.880	Equation 6.10.7.1.1-1	1	1	28148.492	4456.816	3334.006	-0.109	-0.012	-0.009	26357.968	4.928
21.400	2.801	---	---	229125.880	Equation 6.10.7.1.1-1	1	1	50961.162	8034.943	6010.692	-0.108	-0.006	-0.004	48661.203	10.521
23.000	2.528	---	---	229125.880	Equation 6.10.7.1.1-1	1	1	54438.696	8576.293	6415.659	-0.125	-0.005	-0.004	52512.390	11.402
25.900	2.106	---	---	229125.880	Equation 6.10.7.1.1-1	1	1	60554.582	9538.438	7135.410	-0.192	-0.001	-0.001	58805.040	14.533
26.100	2.976	---	---	286159.759	Equation 6.10.7.1.1-1	1	1	60963.644	9582.565	7168.419	-0.116	0.000	0.000	59220.696	8.227
34.500	2.372	---	---	286159.759	Equation 6.10.7.1.1-1	1	1	77516.178	12150.015	9089.049	-0.148	0.009	0.007	75634.309	2.628
41.900	1.831	---	---	286159.759	Equation 6.10.7.1.1-1	1	1	90718.529	14181.964	10609.088	-0.169	0.017	0.013	89027.334	3.324
42.100	2.786	---	---	370690.549	Equation 6.10.7.1.1-1	1	1	91059.633	14212.677	10632.063	-0.049	0.005	0.004	89337.423	1.057
42.300	2.770	---	---	370690.549	Equation 6.10.7.1.1-1	1	1	91396.879	14264.704	10670.982	-0.048	0.005	0.004	89608.029	1.108

Date:	8/2/2021	Span3-5ft-EB.lbsx	
Time:	2:26 PM	Bentley LEAP Bridge Steel [AASHTO LRFD 8th Ed. with 2017 Interims]	v21.00.00.28

FLEXURE RATING

POI Loc. (ft)	Moment Rating Factor	Vehicle Tonnage (Tons)	Rating Tonnage (Tons)	Moment/Stress Resistance (kip-in / ksi)	Controlling Equation	φc	φs	DC1 (kip-in / ksi)	DC2 (kip-in / ksi)	DW (kip-ft / ksi)	flDC1 (ksi)	flDC2 (ksi)	flDW (ksi)	LL (kip-in / ksi)	flLL (ksi)
46.000	2.497	---	---	370690.549	Equation 6.10.7.1.1-1	1	1	97467.825	15188.987	11362.411	-0.028	0.005	0.004	94561.320	2.147
57.500	1.969	---	---	370690.549	Equation 6.10.7.1.1-1	1	1	113794.081	17701.992	13242.311	-0.097	0.009	0.007	111373.500	1.707
63.200	1.790	---	---	370690.549	Equation 6.10.7.1.1-1	1	1	120648.224	18748.543	14025.204	-0.092	0.009	0.007	118256.045	1.576
69.000	1.636	---	---	370690.549	Equation 6.10.7.1.1-1	1	1	126778.483	19665.425	14711.095	-0.067	0.009	0.007	124687.080	1.750
80.500	1.434	---	---	370690.549	Equation 6.10.7.1.1-1	1	1	136012.141	21088.556	15775.693	-0.135	0.012	0.009	134591.730	1.710
84.100	1.389	---	---	370690.549	Equation 6.10.7.1.1-1	1	1	138216.050	21424.953	16027.342	-0.129	0.012	0.009	136894.380	1.761
92.000	1.312	---	---	370690.549	Equation 6.10.7.1.1-1	1	1	141905.311	21968.326	16433.824	-0.075	0.011	0.008	140857.710	2.225
103.625	1.278	---	---	370690.549	Equation 6.10.7.1.1-1	1	1	144028.241	22310.856	16690.058	-0.150	0.014	0.010	142961.280	1.991
105.000	1.282	---	---	370690.549	Equation 6.10.7.1.1-1	1	1	144052.515	22314.844	16693.042	-0.149	0.014	0.010	142483.781	1.995
115.250	1.300	---	---	370690.549	Equation 6.10.7.1.1-1	1	1	142760.331	22101.006	16533.076	-0.071	0.010	0.008	141607.830	2.102
125.900	1.381	---	---	370690.549	Equation 6.10.7.1.1-1	1	1	138201.848	21427.607	16029.328	-0.138	0.013	0.010	137488.837	1.909

Date:	8/2/2021	Span3-5ft-EB.lbsx	
Time:	2:26 PM	Bentley LEAP Bridge Steel [AASHTO LRFD 8th Ed. with 2017 Interims]	v21.00.00.28

FLEXURE RATING

POI Loc. (ft)	Moment Rating Factor	Vehicle Tonnage (Tons)	Rating Tonnage (Tons)	Moment/Stress Resistance (kip-in / ksi)	Controlling Equation	φc	φs	DC1 (kip-in / ksi)	DC2 (kip-in / ksi)	DW (kip-ft / ksi)	flDC1 (ksi)	flDC2 (ksi)	flDW (ksi)	LL (kip-in / ksi)	flLL (ksi)
126.750	1.388	---	---	370690.549	Equation 6.10.7.1.1-1	1	1	137715.615	21352.791	15973.359	-0.139	0.013	0.010	137186.070	1.910
138.250	1.549	---	---	370690.549	Equation 6.10.7.1.1-1	1	1	129330.444	20061.139	15007.116	-0.064	0.009	0.006	129515.400	1.894
146.800	1.749	---	---	370690.549	Equation 6.10.7.1.1-1	1	1	120622.377	18754.688	14029.799	-0.103	0.009	0.007	121874.955	1.175
149.750	1.837	---	---	370690.549	Equation 6.10.7.1.1-1	1	1	117190.165	18230.715	13637.833	-0.103	0.009	0.006	118631.520	0.991
161.250	2.303	---	---	370690.549	Equation 6.10.7.1.1-1	1	1	101708.620	15851.805	11858.243	-0.031	0.004	0.003	103008.150	0.882
167.700	2.669	---	---	370690.549	Equation 6.10.7.1.1-1	1	1	91366.907	14278.762	10681.499	-0.070	0.007	0.005	92901.909	1.196
167.900	2.680	---	---	370690.549	Equation 6.10.7.1.1-1	1	1	91029.780	14226.792	10642.622	-0.070	0.007	0.005	92606.503	1.224
168.100	1.754	---	---	286159.759	Equation 6.10.7.1.1-1	1	1	90689.070	14197.159	10620.454	-0.229	0.022	0.016	92258.880	3.978
172.750	1.990	---	---	286159.759	Equation 6.10.7.1.1-1	1	1	82553.389	12946.967	9685.223	-0.206	0.022	0.016	83821.789	5.609
183.900	2.694	---	---	286159.759	Equation 6.10.7.1.1-1	1	1	60972.989	9600.570	7181.889	-0.144	0.022	0.017	61498.721	12.076
184.100	1.890	---	---	229125.880	Equation 6.10.7.1.1-1	1	1	60560.330	9555.739	7148.353	-0.241	0.038	0.029	61123.440	21.008

Date:	8/2/2021	Span3-5ft-EB.lbsx	
Time:	2:26 PM	Bentley LEAP Bridge Steel [AASHTO LRFD 8th Ed. with 2017 Interims]	v21.00.00.28

FLEXURE RATING

POI Loc. (ft)	Moment Rating Factor	Vehicle Tonnage (Tons)	Rating Tonnage (Tons)	Moment/Stress Resistance (kip-in / ksi)	Controlling Equation	φc	φs	DC1 (kip-in / ksi)	DC2 (kip-in / ksi)	DW (kip-ft / ksi)	flDC1 (ksi)	flDC2 (ksi)	flDW (ksi)	LL (kip-in / ksi)	flLL (ksi)
184.250	2.066	---	---	229125.880	Equation 6.10.7.1.1-1	1	1	60249.407	9514.102	7117.204	-0.170	0.026	0.019	60810.750	14.045
188.600	2.621	---	---	229125.880	Equation 6.10.7.1.1-1	1	1	50934.026	8064.732	6032.976	-0.141	0.018	0.014	51872.643	11.388
197.125	4.906	---	---	229125.880	Equation 6.10.7.1.1-1	1	1	31425.138	5010.622	3748.291	-0.129	0.002	0.001	32360.792	6.135
209.400	109.622	---	---	229125.880	Equation 6.10.7.1.1-1	1	1	368.281	60.500	45.258	-0.119	-0.026	-0.020	399.740	1.543
209.500	999.990	---	---	229125.880	Equation 6.10.7.1.1-1	1	1	0.000	0.000	0.000	0.000	0.000	0.000	0.000	0.000
209.600	94.859	---	---	48.881	Equation 6.10.8.1.1-1 lateral torsion buckling	1	1	-0.002	-0.001	-0.001	-0.095	-0.021	-0.015	-0.097	1.253
210.000	334.125	---	---	48.881	Equation 6.10.8.1.1-1 lateral torsion buckling	1	1	0.000	0.001	0.000	-0.008	-0.002	-0.002	-0.003	0.430

SHEAR RATING

POI Loc. (ft)	Shear Rating Factor	Vehicle Tonnage (Tons)	Rating Tonnage (Tons)	Shear Resistance (kip)	Controlling Equation	φc	φs	DC1 (kip)	DC2 (kip)	DW (kip)	LL (kip)

SHEAR RATING

POI Loc. (ft)	Shear Rating Factor	Vehicle Tonnage (Tons)	Rating Tonnage (Tons)	Shear Resistance (kip)	Controlling Equation	φc	φs	DC1 (kip)	DC2 (kip)	DW (kip)	LL (kip)
0.000	37.982	---	---	1685.625	Equation 6.10.9.1-1	1.000	1.000	-0.498	0.116	0.087	-44.371
0.400	10.980	---	---	1685.625	Equation 6.10.9.1-1	1.000	1.000	-1.674	-0.017	-0.012	153.666
0.500	5.567	---	---	1685.625	Equation 6.10.9.1-1	1.000	1.000	223.682	36.129	27.027	251.242
0.600	5.568	---	---	1685.625	Equation 6.10.9.1-1	1.000	1.000	223.654	36.123	27.022	251.242
11.500	2.174	---	---	761.178	Equation 6.10.9.1-1	1.000	1.000	201.820	32.360	24.207	231.296
21.400	2.484	---	---	761.178	Equation 6.10.9.1-1	1.000	1.000	182.665	28.934	21.645	212.550
23.000	2.516	---	---	761.178	Equation 6.10.9.1-1	1.000	1.000	179.793	28.383	21.232	211.341
25.900	4.548	---	---	1124.840	Equation 6.10.9.1-1	1.000	1.000	173.316	27.377	20.480	198.686
26.100	4.556	---	---	1124.840	Equation 6.10.9.1-1	1.000	1.000	172.599	27.306	20.426	198.539
34.500	2.507	---	---	678.990	Equation 6.10.9.1-1	1.000	1.000	155.974	24.400	18.253	191.622
41.900	2.859	---	---	678.990	Equation 6.10.9.1-1	1.000	1.000	141.759	21.839	16.337	174.538

SHEAR RATING

POI Loc. (ft)	Shear Rating Factor	Vehicle Tonnage (Tons)	Rating Tonnage (Tons)	Shear Resistance (kip)	Controlling Equation	φc	φs	DC1 (kip)	DC2 (kip)	DW (kip)	LL (kip)
42.100	4.165	---	---	904.929	Equation 6.10.9.1-1	1.000	1.000	140.964	21.766	16.283	174.309
42.300	4.178	---	---	904.929	Equation 6.10.9.1-1	1.000	1.000	140.593	21.697	16.231	173.853
46.000	3.403	---	---	747.024	Equation 6.10.9.1-1	1.000	1.000	132.996	20.417	15.273	169.933
57.500	3.911	---	---	747.024	Equation 6.10.9.1-1	1.000	1.000	106.609	16.455	12.310	156.395
63.200	4.269	---	---	747.024	Equation 6.10.9.1-1	1.000	1.000	94.602	14.482	10.833	146.913
69.000	4.581	---	---	747.024	Equation 6.10.9.1-1	1.000	1.000	82.181	12.467	9.326	140.379
80.500	5.338	---	---	747.024	Equation 6.10.9.1-1	1.000	1.000	55.214	8.505	6.363	126.821
84.100	5.712	---	---	747.024	Equation 6.10.9.1-1	1.000	1.000	47.581	7.258	5.429	120.240
92.000	6.550	---	---	742.922	Equation 6.10.9.1-1	1.000	1.000	30.786	4.514	3.377	107.526
103.625	7.592	---	---	742.922	Equation 6.10.9.1-1	1.000	1.000	3.382	0.511	0.382	97.299
105.000	7.814	---	---	742.922	Equation 6.10.9.1-1	1.000	1.000	0.349	0.033	0.025	95.028

SHEAR RATING

POI Loc. (ft)	Shear Rating Factor	Vehicle Tonnage (Tons)	Rating Tonnage (Tons)	Shear Resistance (kip)	Controlling Equation	φc	φs	DC1 (kip)	DC2 (kip)	DW (kip)	LL (kip)
115.250	7.457	---	---	742.922	Equation 6.10.9.1-1	1.000	1.000	-24.889	-3.524	-2.637	-95.462
125.900	6.407	---	---	747.024	Equation 6.10.9.1-1	1.000	1.000	-47.037	-7.217	-5.399	-107.280
126.750	6.278	---	---	747.024	Equation 6.10.9.1-1	1.000	1.000	-49.090	-7.514	-5.621	-109.071
138.250	5.107	---	---	747.024	Equation 6.10.9.1-1	1.000	1.000	-76.316	-11.471	-8.581	-127.395
146.800	4.578	---	---	747.024	Equation 6.10.9.1-1	1.000	1.000	-94.090	-14.433	-10.797	-137.110
149.750	4.263	---	---	747.024	Equation 6.10.9.1-1	1.000	1.000	-100.517	-15.455	-11.561	-145.329
161.250	3.547	---	---	747.024	Equation 6.10.9.1-1	1.000	1.000	-127.215	-19.413	-14.522	-165.182
167.700	3.747	---	---	831.150	Equation 6.10.9.1-1	1.000	1.000	-140.445	-21.647	-16.194	-174.242
167.900	3.733	---	---	831.150	Equation 6.10.9.1-1	1.000	1.000	-140.817	-21.716	-16.245	-174.745
168.100	2.555	---	---	626.874	Equation 6.10.9.1-1	1.000	1.000	-141.623	-21.788	-16.299	-174.996
172.750	2.415	---	---	626.874	Equation 6.10.9.1-1	1.000	1.000	-150.549	-23.396	-17.502	-180.266

SHEAR RATING

POI Loc. (ft)	Shear Rating Factor	Vehicle Tonnage (Tons)	Rating Tonnage (Tons)	Shear Resistance (kip)	Controlling Equation	φc	φs	DC1 (kip)	DC2 (kip)	DW (kip)	LL (kip)
183.900	6.809	---	---	1557.297	Equation 6.10.9.1-1	1.000	1.000	-172.363	-27.253	-20.387	-196.405
184.100	6.798	---	---	1557.297	Equation 6.10.9.1-1	1.000	1.000	-172.991	-27.317	-20.435	-196.601
184.250	2.350	---	---	684.644	Equation 6.10.9.1-1	1.000	1.000	-174.789	-27.360	-20.467	-196.606
188.600	2.262	---	---	684.644	Equation 6.10.9.1-1	1.000	1.000	-182.875	-28.864	-21.592	-199.546
197.125	1.994	---	---	684.644	Equation 6.10.9.1-1	1.000	1.000	-199.204	-31.810	-23.796	-215.538
209.400	5.960	---	---	1685.625	Equation 6.10.9.1-1	1.000	1.000	-223.670	-36.045	-26.964	-234.731
209.500	5.960	---	---	1685.625	Equation 6.10.9.1-1	1.000	1.000	-223.698	-36.050	-26.968	-234.731
209.600	11.828	---	---	1685.625	Equation 6.10.9.1-1	1.000	1.000	1.696	0.018	0.014	-142.660
210.000	37.280	---	---	1685.625	Equation 6.10.9.1-1	1.000	1.000	0.520	-0.120	-0.089	45.207

Design Operating (Strength I) **Design Operating**

FLEXURE RATING

Date:	8/2/2021	Span3-5ft-EB.lbsx	
Time:	2:26 PM	Bentley LEAP Bridge Steel [AASHTO LRFD 8th Ed. with 2017 Interims]	v21.00.00.28

POI Loc. (ft)	Moment Rating Factor	Vehicle Tonnage (Tons)	Rating Tonnage (Tons)	Moment/Stress Resistance (kip-in / ksi)	Controlling Equation	φc	φs	DC1 (kip-in / ksi)	DC2 (kip-in / ksi)	DW (kip-ft / ksi)	flDC1 (ksi)	flDC2 (ksi)	flDW (ksi)	LL (kip-in / ksi)	flLL (ksi)
0.000	455.914	---	---	48.881	Equation 6.10.8.1.1-1 lateral torsion buckling	1	1	0.000	0.000	0.000	-0.009	-0.001	-0.001	-0.007	0.299
0.400	16.588	---	---	48.881	Equation 6.10.8.1.1-1 lateral torsion buckling	1	1	-0.003	0.001	0.001	-0.089	-0.017	-0.013	-2.651	0.880
0.500	999.990	---	---	229125.880	Equation 6.10.7.1.1-1	1	1	0.000	0.000	0.000	0.000	0.000	0.000	0.000	0.000
0.600	10.597	---	---	48.881	Equation 6.10.8.1.1-1 lateral torsion buckling	1	1	0.171	0.006	0.005	-0.102	-0.019	-0.014	-4.301	0.974
11.500	7.993	---	---	229125.880	Equation 6.10.7.1.1-1	1	1	28148.492	4456.816	3334.006	-0.108	-0.012	-0.009	20333.290	3.788
21.400	3.633	---	---	229125.880	Equation 6.10.7.1.1-1	1	1	50961.162	8034.943	6010.692	-0.108	-0.006	-0.004	37538.642	8.088
23.000	3.279	---	---	229125.880	Equation 6.10.7.1.1-1	1	1	54438.696	8576.293	6415.659	-0.124	-0.005	-0.004	40509.558	8.765
25.900	2.737	---	---	229125.880	Equation 6.10.7.1.1-1	1	1	60554.582	9538.438	7135.410	-0.189	-0.001	-0.001	45363.888	11.045
26.100	3.868	---	---	286159.759	Equation 6.10.7.1.1-1	1	1	60963.644	9582.565	7168.419	-0.114	0.000	0.000	45684.537	6.241

Date:	8/2/2021	Span3-5ft-EB.lbsx	
Time:	2:26 PM	Bentley LEAP Bridge Steel [AASHTO LRFD 8th Ed. with 2017 Interims]	v21.00.00.28

FLEXURE RATING

POI Loc. (ft)	Moment Rating Factor	Vehicle Tonnage (Tons)	Rating Tonnage (Tons)	Moment/Stress Resistance (kip-in / ksi)	Controlling Equation	φc	φs	DC1 (kip-in / ksi)	DC2 (kip-in / ksi)	DW (kip-ft / ksi)	flDC1 (ksi)	flDC2 (ksi)	flDW (ksi)	LL (kip-in / ksi)	flLL (ksi)
34.500	3.076	---	---	286159.759	Equation 6.10.7.1.1-1	1	1	77516.178	12150.015	9089.049	-0.146	0.009	0.007	58346.467	1.993
41.900	2.376	---	---	286159.759	Equation 6.10.7.1.1-1	1	1	90718.529	14181.964	10609.088	-0.165	0.017	0.012	68678.229	2.506
42.100	3.612	---	---	370690.549	Equation 6.10.7.1.1-1	1	1	91059.633	14212.677	10632.063	-0.049	0.005	0.004	68917.441	0.808
42.300	3.591	---	---	370690.549	Equation 6.10.7.1.1-1	1	1	91396.879	14264.704	10670.982	-0.048	0.005	0.004	69126.194	0.847
46.000	3.239	---	---	370690.549	Equation 6.10.7.1.1-1	1	1	97467.825	15188.987	11362.411	-0.028	0.005	0.004	72947.304	1.632
57.500	2.553	---	---	370690.549	Equation 6.10.7.1.1-1	1	1	113794.081	17701.992	13242.311	-0.095	0.009	0.006	85916.700	1.297
63.200	2.322	---	---	370690.549	Equation 6.10.7.1.1-1	1	1	120648.224	18748.543	14025.204	-0.091	0.009	0.007	91226.092	1.197
69.000	2.122	---	---	370690.549	Equation 6.10.7.1.1-1	1	1	126778.483	19665.425	14711.095	-0.065	0.009	0.007	96187.176	1.322
80.500	1.859	---	---	370690.549	Equation 6.10.7.1.1-1	1	1	136012.141	21088.556	15775.693	-0.132	0.012	0.009	103827.906	1.292
84.100	1.802	---	---	370690.549	Equation 6.10.7.1.1-1	1	1	138216.050	21424.953	16027.342	-0.127	0.012	0.009	105604.236	1.331
92.000	1.702	---	---	370690.549	Equation 6.10.7.1.1-1	1	1	141905.311	21968.326	16433.824	-0.073	0.010	0.008	108661.662	1.676

Date:	8/2/2021	Span3-5ft-EB.lbsx	
Time:	2:26 PM	Bentley LEAP Bridge Steel [AASHTO LRFD 8th Ed. with 2017 Interims]	v21.00.00.28

FLEXURE RATING

POI Loc. (ft)	Moment Rating Factor	Vehicle Tonnage (Tons)	Rating Tonnage (Tons)	Moment/Stress Resistance (kip-in / ksi)	Controlling Equation	φc	φs	DC1 (kip-in / ksi)	DC2 (kip-in / ksi)	DW (kip-ft / ksi)	flDC1 (ksi)	flDC2 (ksi)	flDW (ksi)	LL (kip-in / ksi)	flLL (ksi)
103.625	1.657	---	---	370690.549	Equation 6.10.7.1.1-1	1	1	144028.241	22310.856	16690.058	-0.146	0.014	0.010	110284.416	1.500
105.000	1.662	---	---	370690.549	Equation 6.10.7.1.1-1	1	1	144052.515	22314.844	16693.042	-0.145	0.014	0.010	109916.059	1.502
115.250	1.686	---	---	370690.549	Equation 6.10.7.1.1-1	1	1	142760.331	22101.006	16533.076	-0.069	0.010	0.007	109240.326	1.587
125.900	1.791	---	---	370690.549	Equation 6.10.7.1.1-1	1	1	138201.848	21427.607	16029.328	-0.135	0.013	0.009	106062.817	1.442
126.750	1.800	---	---	370690.549	Equation 6.10.7.1.1-1	1	1	137715.615	21352.791	15973.359	-0.136	0.013	0.009	105829.254	1.442
138.250	2.009	---	---	370690.549	Equation 6.10.7.1.1-1	1	1	129330.444	20061.139	15007.116	-0.063	0.008	0.006	99911.880	1.437
146.800	2.268	---	---	370690.549	Equation 6.10.7.1.1-1	1	1	120622.377	18754.688	14029.799	-0.102	0.009	0.007	94017.823	0.892
149.750	2.382	---	---	370690.549	Equation 6.10.7.1.1-1	1	1	117190.165	18230.715	13637.833	-0.101	0.008	0.006	91515.744	0.752
161.250	2.986	---	---	370690.549	Equation 6.10.7.1.1-1	1	1	101708.620	15851.805	11858.243	-0.030	0.004	0.003	79463.430	0.673
167.700	3.460	---	---	370690.549	Equation 6.10.7.1.1-1	1	1	91366.907	14278.762	10681.499	-0.069	0.007	0.005	71667.187	0.914
167.900	3.475	---	---	370690.549	Equation 6.10.7.1.1-1	1	1	91029.780	14226.792	10642.622	-0.070	0.007	0.005	71439.302	0.935

Date:	8/2/2021	Span3-5ft-EB.lbsx	
Time:	2:26 PM	Bentley LEAP Bridge Steel [AASHTO LRFD 8th Ed. with 2017 Interims]	v21.00.00.28

FLEXURE RATING

POI Loc. (ft)	Moment Rating Factor	Vehicle Tonnage (Tons)	Rating Tonnage (Tons)	Moment/Stress Resistance (kip-in / ksi)	Controlling Equation	φc	φs	DC1 (kip-in / ksi)	DC2 (kip-in / ksi)	DW (kip-ft / ksi)	flDC1 (ksi)	flDC2 (ksi)	flDW (ksi)	LL (kip-in / ksi)	flLL (ksi)
168.100	2.277	---	---	286159.759	Equation 6.10.7.1.1-1	1	1	90689.070	14197.159	10620.454	-0.224	0.021	0.016	71171.136	2.995
172.750	2.584	---	---	286159.759	Equation 6.10.7.1.1-1	1	1	82553.389	12946.967	9685.223	-0.202	0.021	0.016	64662.523	4.240
183.900	3.507	---	---	286159.759	Equation 6.10.7.1.1-1	1	1	60972.989	9600.570	7181.889	-0.141	0.022	0.016	47441.870	9.128
184.100	2.460	---	---	229125.880	Equation 6.10.7.1.1-1	1	1	60560.330	9555.739	7148.353	-0.237	0.038	0.028	47152.368	15.917
184.250	2.682	---	---	229125.880	Equation 6.10.7.1.1-1	1	1	60249.407	9514.102	7117.204	-0.169	0.025	0.019	46911.150	10.767
188.600	3.401	---	---	229125.880	Equation 6.10.7.1.1-1	1	1	50934.026	8064.732	6032.976	-0.140	0.018	0.014	40016.039	8.731
197.125	6.366	---	---	229125.880	Equation 6.10.7.1.1-1	1	1	31425.138	5010.622	3748.291	-0.128	0.001	0.001	24964.040	4.703
209.400	142.790	---	---	229125.880	Equation 6.10.7.1.1-1	1	1	368.281	60.500	45.258	-0.118	-0.026	-0.020	308.371	1.183
209.500	999.990	---	---	229125.880	Equation 6.10.7.1.1-1	1	1	0.000	0.000	0.000	0.000	0.000	0.000	0.000	0.000
209.600	123.732	---	---	48.881	Equation 6.10.8.1.1-1 lateral torsion buckling	1	1	-0.002	-0.001	-0.001	-0.094	-0.021	-0.015	-0.075	0.959

Date:	8/2/2021	Span3-5ft-EB.lbsx	
Time:	2:26 PM	Bentley LEAP Bridge Steel [AASHTO LRFD 8th Ed. with 2017 Interims]	v21.00.00.28

FLEXURE RATING

POI Loc. (ft)	Moment Rating Factor	Vehicle Tonnage (Tons)	Rating Tonnage (Tons)	Moment/Stress Resistance (kip-in / ksi)	Controlling Equation	φc	φs	DC1 (kip-in / ksi)	DC2 (kip-in / ksi)	DW (kip-ft / ksi)	flDC1 (ksi)	flDC2 (ksi)	flDW (ksi)	LL (kip-in / ksi)	flLL (ksi)
210.000	436.385	---	---	48.881	Equation 6.10.8.1.1-1 lateral torsion buckling	1	1	0.000	0.001	0.000	-0.008	-0.002	-0.002	-0.002	0.329

SHEAR RATING

POI Loc. (ft)	Shear Rating Factor	Vehicle Tonnage (Tons)	Rating Tonnage (Tons)	Shear Resistance (kip)	Controlling Equation	φc	φs	DC1 (kip)	DC2 (kip)	DW (kip)	LL (kip)
0.000	49.236	---	---	1685.625	Equation 6.10.9.1-1	1.000	1.000	-0.498	0.116	0.087	-34.229
0.400	14.234	---	---	1685.625	Equation 6.10.9.1-1	1.000	1.000	-1.674	-0.017	-0.012	118.542
0.500	7.217	---	---	1685.625	Equation 6.10.9.1-1	1.000	1.000	223.682	36.129	27.027	193.815
0.600	7.217	---	---	1685.625	Equation 6.10.9.1-1	1.000	1.000	223.654	36.123	27.022	193.815
11.500	2.818	---	---	761.178	Equation 6.10.9.1-1	1.000	1.000	201.820	32.360	24.207	178.428
21.400	3.220	---	---	761.178	Equation 6.10.9.1-1	1.000	1.000	182.665	28.934	21.645	163.967
23.000	3.262	---	---	761.178	Equation 6.10.9.1-1	1.000	1.000	179.793	28.383	21.232	163.034

SHEAR RATING

POI Loc. (ft)	Shear Rating Factor	Vehicle Tonnage (Tons)	Rating Tonnage (Tons)	Shear Resistance (kip)	Controlling Equation	φc	φs	DC1 (kip)	DC2 (kip)	DW (kip)	LL (kip)
25.900	5.896	---	---	1124.840	Equation 6.10.9.1-1	1.000	1.000	173.316	27.377	20.480	153.272
26.100	5.906	---	---	1124.840	Equation 6.10.9.1-1	1.000	1.000	172.599	27.306	20.426	153.159
34.500	3.250	---	---	678.990	Equation 6.10.9.1-1	1.000	1.000	155.974	24.400	18.253	147.822
41.900	3.706	---	---	678.990	Equation 6.10.9.1-1	1.000	1.000	141.759	21.839	16.337	134.643
42.100	5.398	---	---	904.929	Equation 6.10.9.1-1	1.000	1.000	140.964	21.766	16.283	134.467
42.300	5.416	---	---	904.929	Equation 6.10.9.1-1	1.000	1.000	140.593	21.697	16.231	134.115
46.000	4.412	---	---	747.024	Equation 6.10.9.1-1	1.000	1.000	132.996	20.417	15.273	131.091
57.500	5.070	---	---	747.024	Equation 6.10.9.1-1	1.000	1.000	106.609	16.455	12.310	120.648
63.200	5.533	---	---	747.024	Equation 6.10.9.1-1	1.000	1.000	94.602	14.482	10.833	113.333
69.000	5.938	---	---	747.024	Equation 6.10.9.1-1	1.000	1.000	82.181	12.467	9.326	108.293
80.500	6.919	---	---	747.024	Equation 6.10.9.1-1	1.000	1.000	55.214	8.505	6.363	97.833

SHEAR RATING

POI Loc. (ft)	Shear Rating Factor	Vehicle Tonnage (Tons)	Rating Tonnage (Tons)	Shear Resistance (kip)	Controlling Equation	φc	φs	DC1 (kip)	DC2 (kip)	DW (kip)	LL (kip)
84.100	7.404	---	---	747.024	Equation 6.10.9.1-1	1.000	1.000	47.581	7.258	5.429	92.756
92.000	8.490	---	---	742.922	Equation 6.10.9.1-1	1.000	1.000	30.786	4.514	3.377	82.949
103.625	9.841	---	---	742.922	Equation 6.10.9.1-1	1.000	1.000	3.382	0.511	0.382	75.059
105.000	10.129	---	---	742.922	Equation 6.10.9.1-1	1.000	1.000	0.349	0.033	0.025	73.308
115.250	9.667	---	---	742.922	Equation 6.10.9.1-1	1.000	1.000	-24.889	-3.524	-2.637	-73.642
125.900	8.306	---	---	747.024	Equation 6.10.9.1-1	1.000	1.000	-47.037	-7.217	-5.399	-82.759
126.750	8.139	---	---	747.024	Equation 6.10.9.1-1	1.000	1.000	-49.090	-7.514	-5.621	-84.140
138.250	6.621	---	---	747.024	Equation 6.10.9.1-1	1.000	1.000	-76.316	-11.471	-8.581	-98.276
146.800	5.935	---	---	747.024	Equation 6.10.9.1-1	1.000	1.000	-94.090	-14.433	-10.797	-105.770
149.750	5.526	---	---	747.024	Equation 6.10.9.1-1	1.000	1.000	-100.517	-15.455	-11.561	-112.111
161.250	4.598	---	---	747.024	Equation 6.10.9.1-1	1.000	1.000	-127.215	-19.413	-14.522	-127.426

SHEAR RATING

POI Loc. (ft)	Shear Rating Factor	Vehicle Tonnage (Tons)	Rating Tonnage (Tons)	Shear Resistance (kip)	Controlling Equation	φc	φs	DC1 (kip)	DC2 (kip)	DW (kip)	LL (kip)
167.700	4.857	---	---	831.150	Equation 6.10.9.1-1	1.000	1.000	-140.445	-21.647	-16.194	-134.415
167.900	4.839	---	---	831.150	Equation 6.10.9.1-1	1.000	1.000	-140.817	-21.716	-16.245	-134.803
168.100	3.312	---	---	626.874	Equation 6.10.9.1-1	1.000	1.000	-141.623	-21.788	-16.299	-134.997
172.750	3.131	---	---	626.874	Equation 6.10.9.1-1	1.000	1.000	-150.549	-23.396	-17.502	-139.062
183.900	8.826	---	---	1557.297	Equation 6.10.9.1-1	1.000	1.000	-172.363	-27.253	-20.387	-151.512
184.100	8.813	---	---	1557.297	Equation 6.10.9.1-1	1.000	1.000	-172.991	-27.317	-20.435	-151.664
184.250	3.046	---	---	684.644	Equation 6.10.9.1-1	1.000	1.000	-174.789	-27.360	-20.467	-151.667
188.600	2.932	---	---	684.644	Equation 6.10.9.1-1	1.000	1.000	-182.875	-28.864	-21.592	-153.935
197.125	2.585	---	---	684.644	Equation 6.10.9.1-1	1.000	1.000	-199.204	-31.810	-23.796	-166.272
209.400	7.726	---	---	1685.625	Equation 6.10.9.1-1	1.000	1.000	-223.670	-36.045	-26.964	-181.078
209.500	7.725	---	---	1685.625	Equation 6.10.9.1-1	1.000	1.000	-223.698	-36.050	-26.968	-181.078

Date:	8/2/2021	Span3-5ft-EB.lbsx	
Time:	2:26 PM	Bentley LEAP Bridge Steel [AASHTO LRFD 8th Ed. with 2017 Interims]	v21.00.00.28

SHEAR RATING

POI Loc. (ft)	Shear Rating Factor	Vehicle Tonnage (Tons)	Rating Tonnage (Tons)	Shear Resistance (kip)	Controlling Equation	φc	φs	DC1 (kip)	DC2 (kip)	DW (kip)	LL (kip)
209.600	15.332	---	---	1685.625	Equation 6.10.9.1-1	1.000	1.000	1.696	0.018	0.014	-110.052
210.000	48.326	---	---	1685.625	Equation 6.10.9.1-1	1.000	1.000	0.520	-0.120	-0.089	34.874

SUMMARY REPORT

Load Rating Combination	Controlling POI Loc. (ft)	Based on	Controlling Equation	Rating Factor	Vehicle Tonnage (Tons)	Rating Tonnage (Tons)
Design Inventory	103.625	Flexure	Equation 6.10.7.1.1-1	1.278	---	---
Design Operating	103.625	Flexure	Equation 6.10.7.1.1-1	1.657	---	---
Permit	103.625	Flexure	Equation 6.10.7.1.1-1	1.591	59.995	95.457

e. LEAP Concrete Bridge Input – Span 4, 5 and 6

Bentley				Sheet #	1
				Job #	
Program:	LEAP® Bridge Concrete CONNECT Edition	BASE Consultants		Designed	KV
Module:	Precast/Prestressed Girder	Copyright © Bentley Systems, Inc. 2021		Date	Jan/7/2021
Version:	21.00.00.24	www.bentley.com	Phone: 1-800-778-4277	Checked	RK
File Name:	**Span4-5-6-EB(5ft).lbcx**			Date	Jan/7/2021

PROJECT DATA

Project:	SR 417 OVER LAKE BOSSE
Designer:	KV
Date:	Jan/7/2021
Checked By:	RK
Date Checked:	Jan/7/2021
User job number:	
State:	FL, State Job #:CFX # 414-227
State Specification:	None
Design Code:	AASHTO LRFD - 8th Edition
Units:	US
Span Type:	Multi-Span (Continuous)
Flared Girder:	No
Comments:	Concrete Span 4-5-6
File Name:	C:\Users\KaranBASE\AppData\Local\Temp\OBD20210802104510442\Standalone\Standalone2\Span4-5-6-EB(5ft).lbcx

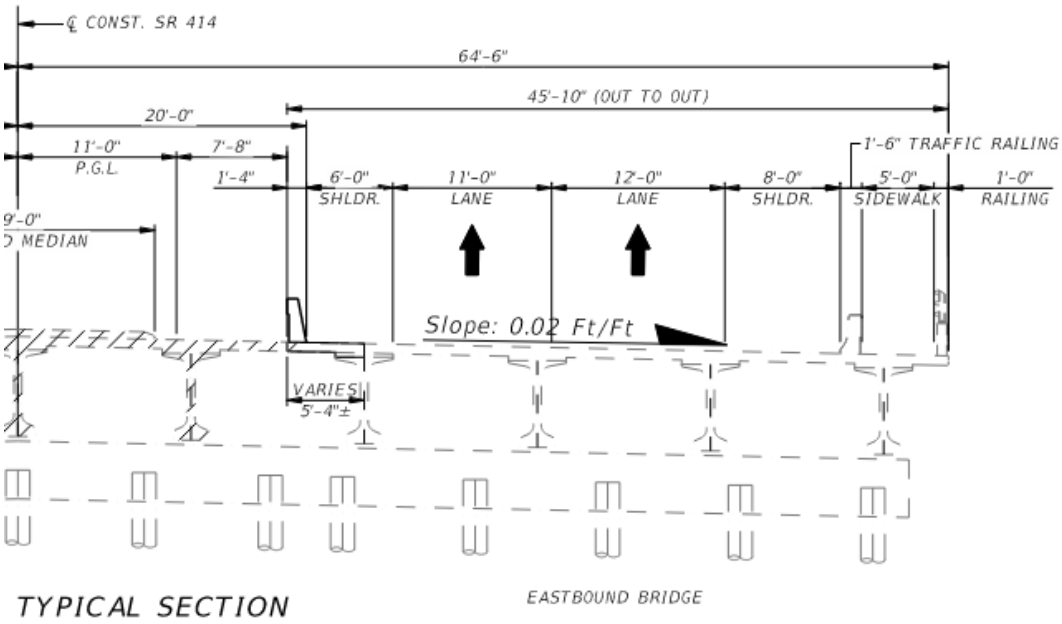

TYPICAL SECTION

EASTBOUND BRIDGE

GEOMETRY DATA

BRIDGE LAYOUT

Overall Width (ft)	45.840
Left curb (ft)	1.500
Right curb (ft)	1.500
Curb-to-curb width (ft)	42.840
Number of spans	3
Number of lanes	3
Lane width (ft)	12.000
Eff Deck thick (in)	8.000
Sacrificial thick (in)	0.000
Haunch thickness (in)	2.000
Haunch width (in)	48.000

SPAN DATA

Span	Pier-to-pier ft	Precast ft	Brg-to-brg ft	Pier CL ft	Release ft	StartSkew	EndSkew	Bridge c/s M.I. in4
1	101.667	101.167	100.166	0.000	101.167	0.38	1.25	6230100.00
2	101.667	100.667	99.664	0.500	100.667	1.25	2.12	6230100.00
3	101.667	101.167	100.166	0.500	101.167	2.12	2.97	6230100.00

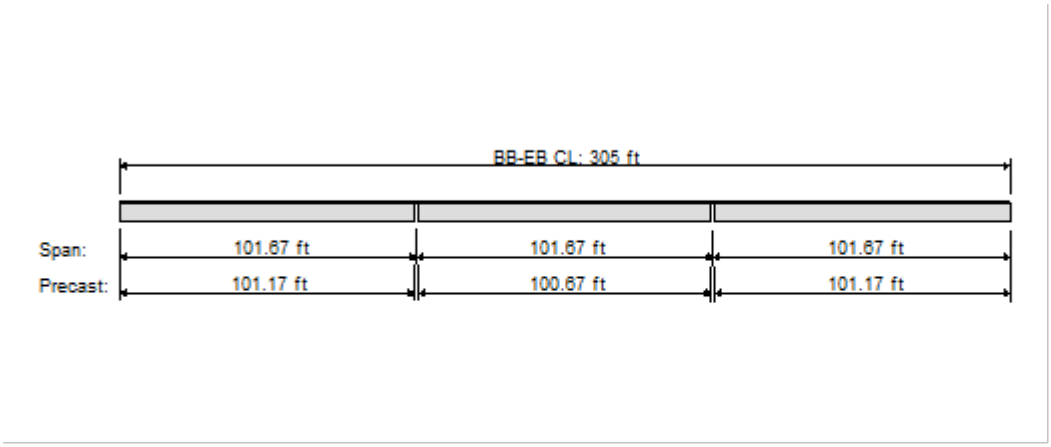

BR01 - Bridge elevation

BEAM DATA

Span: 1

No	ID	Loc-prev ft	Area in2	MI(Ixx) in4	Height in	Yb in	B-topg in	B-trib ft
1	Florida bulb tee-72	5.330	901.1	639096.4	72.00	34.34	48.00	11.330
2	Florida bulb tee-72	12.000	901.1	639096.4	72.00	34.34	48.00	12.000
3	Florida bulb tee-72	12.000	901.1	639096.4	72.00	34.34	48.00	12.000
4	Florida bulb tee-72	12.000	901.1	639096.4	72.00	34.34	48.00	10.510

Span: 2

No	ID	Loc-prev ft	Area in2	MI(Ixx) in4	Height in	Yb in	B-topg in	B-trib ft
1	Florida bulb tee-72	4.510	901.1	639096.4	72.00	34.34	48.00	10.510
2	Florida bulb tee-72	12.000	901.1	639096.4	72.00	34.34	48.00	12.000
3	Florida bulb tee-72	12.000	901.1	639096.4	72.00	34.34	48.00	12.000
4	Florida bulb tee-72	12.000	901.1	639096.4	72.00	34.34	48.00	11.330

Span: 3

No	ID	Loc-prev ft	Area in2	MI(Ixx) in4	Height in	Yb in	B-topg in	B-trib ft
1	Florida bulb tee-72	4.510	901.1	639096.4	72.00	34.34	48.00	10.510
2	Florida bulb tee-72	12.000	901.1	639096.4	72.00	34.34	48.00	12.000
3	Florida bulb tee-72	12.000	901.1	639096.4	72.00	34.34	48.00	12.000
4	Florida bulb tee-72	12.000	901.1	639096.4	72.00	34.34	48.00	11.330

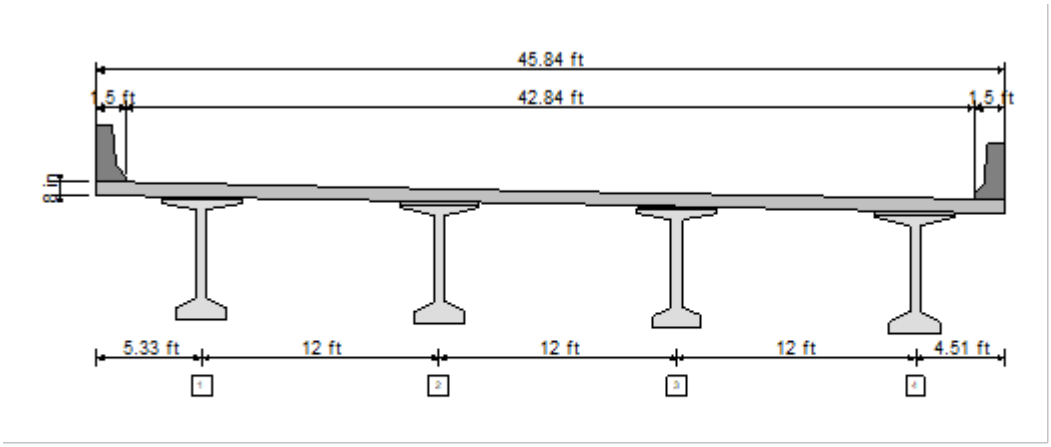

BR01 - Bridge cross section for Span 1

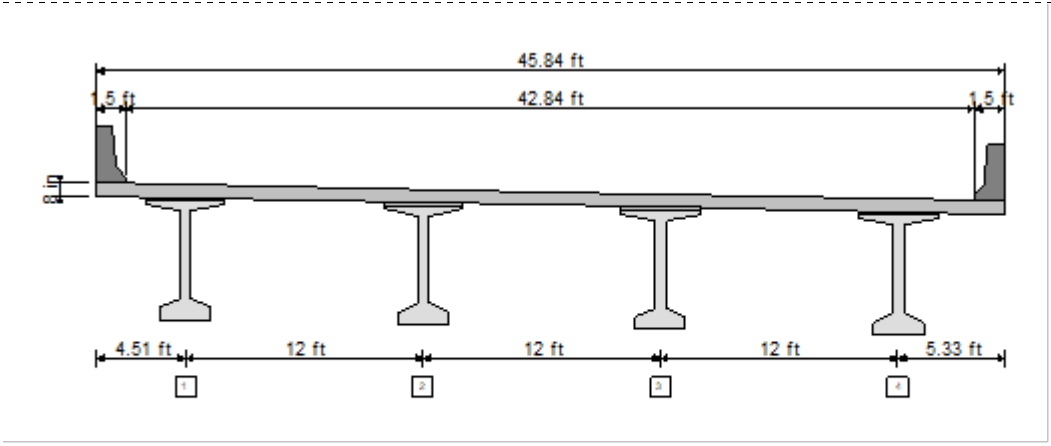

BR01 - Bridge cross section for Span 2, Span 3

MATERIAL DATA - Project Level

As defined in Material Tab. For beam level properties look at Beam Specific output.

CONCRETE PROPERTIES

	Precast Release	Precast Final	C.I.P
f'c (ksi)	4.500	6.500	4.500
Wc (pcf)	150.000	150.000	150.000
Concrete Type	Normal	Normal	Normal
Lambda	1.000	1.000	1.000
Ec (ksi)	4435.310	5007.550	4435.310
K1	1.000	1.000	1.000
Thermal coeff.(1/°F)	0.00000600		

STRAND AND REBAR PROPERTIES

PRESTRESSED STEEL:
1/2-270K-LL, Low relaxation strands
Straight Pattern
Strand Diameter = 0.500 in
Tensile Strength(fpu) = 270.0 ksi
Use transformed strand and rebar: No

REINFORCING STEEL:
Tension/Shear steel: fy = 60.0 ksi Es = 29000 ksi

LOADS DATA

Loads generated using Permanent Load Wizard: YES

Left Barrier Weight, klf	0.000
Right Barrier Weight, klf	0.255
Left Curb Weight, klf	0.420
Right Curb Weight, klf	0.430
Left Sidewalk, klf	0.000
Right Sidewalk, klf	0.080
Future Wearing Surface, ksf	0.015
Sacrificial Wearing Surface, in	0.000
Stay in Place Deck Forms, klf	0.160

DEAD LOADS ON PRECAST

UNITS: (Point: kips, Location: ft, Line: klf, Trapez: klf)

Span	Beam	DC/DW	Type	Mag.1	Loc.1	Mag.2	Loc.2	Description
1	1	DC	Line	0.160	0.000	0.160	100.166	Stay-in-Place Deck Forms
1	2	DC	Line	0.160	0.000	0.160	100.166	Stay-in-Place Deck Forms
1	3	DC	Line	0.160	0.000	0.160	100.166	Stay-in-Place Deck Forms
1	4	DC	Line	0.160	0.000	0.160	100.166	Stay-in-Place Deck Forms
2	1	DC	Line	0.160	0.000	0.160	99.664	Stay-in-Place Deck Forms
2	2	DC	Line	0.160	0.000	0.160	99.664	Stay-in-Place Deck Forms
2	3	DC	Line	0.160	0.000	0.160	99.664	Stay-in-Place Deck Forms
2	4	DC	Line	0.160	0.000	0.160	99.664	Stay-in-Place Deck Forms
3	1	DC	Line	0.160	0.000	0.160	100.166	Stay-in-Place Deck Forms
3	2	DC	Line	0.160	0.000	0.160	100.166	Stay-in-Place Deck Forms
3	3	DC	Line	0.160	0.000	0.160	100.166	Stay-in-Place Deck Forms
3	4	DC	Line	0.160	0.000	0.160	100.166	Stay-in-Place Deck Forms

DIAPHRAGM LOADS - using Wizard

Span	Magnitude (plf)	Location (ft)	Skew (deg)
1	0.637	0.000	0.000
1	0.637	99.000	0.000
2	0.637	1.000	0.000
2	0.637	99.000	0.000
3	0.637	1.000	0.000
3	0.637	99.000	0.000

Span	Beam	Load (kips)	Location (ft)
1	1	0.004	0.117
1	1	0.004	98.883
1	2	0.007	0.037
1	2	0.007	98.963
1	3	0.007	0.043
1	3	0.007	99.043
1	4	0.004	0.122
1	4	0.004	99.122
2	1	0.004	0.598
2	1	0.004	98.598
2	2	0.007	0.860
2	2	0.007	98.860
2	3	0.007	1.122
2	3	0.007	99.122
2	4	0.004	1.384
2	4	0.004	99.384
3	1	0.004	0.319
3	1	0.004	98.319
3	2	0.007	0.763
3	2	0.007	98.763
3	3	0.007	1.207
3	3	0.007	99.207
3	4	0.004	1.651
3	4	0.004	99.651

DEAD LOADS ON COMPOSITE

UNITS: (Point: kips, Location: ft, Line: klf, Trapez: klf, Area: ksf, Width: ft)

Span	DC/DW	Type	Mag.1	Loc.1/Width	Mag.2	Loc.2	Description
1	DC	Line	0.420	0.000	0.420	100.166	Left Curb Weight
1	DC	Line	0.430	0.000	0.430	100.166	Right Curb Weight
1	DC	Line	0.255	0.000	0.255	100.166	Right Barrier Weight
1	DC	Line	0.080	0.000	0.080	100.166	Right Sidewalk
1	DW	Area	0.015	42.840	-	-	Future Wearing Surface
2	DC	Line	0.420	0.000	0.420	99.664	Left Curb Weight
2	DC	Line	0.430	0.000	0.430	99.664	Right Curb Weight
2	DC	Line	0.255	0.000	0.255	99.664	Right Barrier Weight
2	DC	Line	0.080	0.000	0.080	99.664	Right Sidewalk
2	DW	Area	0.015	42.840	-	-	Future Wearing Surface
3	DC	Line	0.420	0.000	0.420	100.166	Left Curb Weight
3	DC	Line	0.430	0.000	0.430	100.166	Right Curb Weight
3	DC	Line	0.255	0.000	0.255	100.166	Right Barrier Weight
3	DC	Line	0.080	0.000	0.080	100.166	Right Sidewalk
3	DW	Area	0.015	42.840	-	-	Future Wearing Surface

TEMPERATURE LOADS - NONE

LIVE LOADS

Live load deflection: not included.

ID	Type
Design Lane	Design Lane
Design Tandem	Design Tandem
Design Truck	Design Truck
Double Truck	Double Truck

Pedestrian Load - NONE

LIVE LOADS USED

LIVE LOAD LIBRARY: USLRFDTruckLib.shlib

1 ID: Design Lane

Description:	Design Lane as in AASHTO-LRFD
Type:	Design Lane

Lane Load:	Intensity = 0.64 klf,	Width = 10.00 ft

2 ID: Design Tandem

Description:	Design Tandem as in AASHTO-LRFD
Type:	Design Tandem

First Axle Magnitude = 25.00 k,	Wheel Spacing = 6.00 ft,	Truck Width = 10.00 ft

#	Magnitude, k	Max Spacing, ft	Min Spacing, ft	Increment, ft
1	25.00	4.00	4.00	0.00

3 ID: Design Truck

Description:	Design Truck as in AASHTO-LRFD
Type:	Design Truck

First Axle Magnitude = 8.00 k,	Wheel Spacing = 6.00 ft,	Truck Width = 10.00 ft

#	Magnitude, k	Max Spacing, ft	Min Spacing, ft	Increment, ft
1	32.00	14.00	14.00	0.00
2	32.00	30.00	14.00	2.00

4 ID: Double Truck

Description:	Double Truck as in AASHTO-LRFD
Type:	Double Truck

First Axle Magnitude = 8.00 k,	Wheel Spacing = 6.00 ft,	Truck Width = 10.00 ft

#	Magnitude, k	Max Spacing, ft	Min Spacing, ft	Increment, ft
1	32.00	14.00	14.00	0.00
2	32.00	14.00	14.00	0.00
3	8.00	300.00	50.00	14.00
4	32.00	14.00	14.00	0.00
5	32.00	14.00	14.00	0.00

5 ID: Fatigue Truck

Description:	Fatigue Truck as in AASHTO-LRFD
Type:	Fatigue Truck

First Axle Magnitude = 8.00 k,	Wheel Spacing = 6.00 ft,	Truck Width = 10.00 ft

#	Magnitude, k	Max Spacing, ft	Min Spacing, ft	Increment, ft
1	32.00	14.00	14.00	0.00
2	32.00	30.00	30.00	0.00

RATING LOADS

Design Live Load Type,	Weight (tons),	Wheel Spacing(ft)
HL93 Design Load	-	-

Permit Live Load Type,	Weight (tons),	Wheel Spacing(ft)
FL120	60.00	6.00

RATING LOADS DETAILS
Design Rating Loads:

1 ID: HL93 Design Load

Description:	HL93 Design Load - Internal
Type:	Design Lane + Design Truck + Design Tandem + Double Truck

* HL93 Internal loads:

HL93 Load ID: Design Lane *

Description:	Design Lane - Internal
Type:	Design Lane

Lane Load:	Intensity = 0.64 klf,	Width = 10.00 ft

HL93 Load ID: Design Tandem *

Description:	Design Tandem - Internal
Type:	Design Tandem

First Axle Magnitude = 25.00 k,	Wheel Spacing = 6.00 ft,	Truck Width = 10.00 ft

#	Magnitude, k	Max Spacing, ft	Min Spacing, ft	Increment, ft
1	25.00	4.00	4.00	0.00

HL93 Load ID: Design Truck *

Description:	Design Truck - Internal
Type:	Design Truck

First Axle Magnitude = 8.00 k,	Wheel Spacing = 6.00 ft,	Truck Width = 10.00 ft

#	Magnitude, k	Max Spacing, ft	Min Spacing, ft	Increment, ft
1	32.00	14.00	14.00	0.00
2	32.00	30.00	14.00	2.00

HL93 Load ID: Double Truck *

Description:	Double Truck - Internal
Type:	Double Truck

First Axle Magnitude = 8.00 k,	Wheel Spacing = 6.00 ft,	Truck Width = 10.00 ft

#	Magnitude, k	Max Spacing, ft	Min Spacing, ft	Increment, ft
1	32.00	14.00	14.00	0.00
2	32.00	14.00	14.00	0.00
3	8.00	300.00	50.00	14.00
4	32.00	14.00	14.00	0.00
5	32.00	14.00	14.00	0.00

Permit Rating Loads:

1 ID: FL120

Description:	FL120 Permit Vehicle
Type:	Permit Vehicle

Uniform Load	Intensity, klf	Location, ft	Length, ft
Preceding	0.00	0.00	0.00
Trailing	0.00	0.00	0.00

First Axle Magnitude = 13.33 k,	Wheel Spacing = 6.00 ft,	Truck Width = 10.00 ft

#	Magnitude, k	Max Spacing, ft	Min Spacing, ft	Increment, ft
1	53.33	14.00	14.00	0.00
2	53.33	14.00	14.00	0.00

ANALYSIS DATA

ANALYSIS PARAMETERS DATA

Truck impact:	1.330
Lane impact:	1.000
Strength II impact:	1.330
Fatigue impact:	1.150

DISTRIBUTION FACTORS (Art. 4.6.2.2):

Include sacrificial deck thick in ts:	NO
Is Span Post-tensioned:	NO
Include Rigid Cross Section Assumption (Art. 4.6.2.2.2d):	YES
ADTT (Average Daily Truck Traffic) :	5000
Percent of the specified force effect :	1.00
Apply reduction of Moment for skew:	YES

NOTE: Beam specific dead and live load DFs are printed in beam level reports.

LOAD FACTORS: (Table 3.4.1-1 & 3.4.1-2)

	Live	DC(max)	DC(min)	DW(max)	DW(min)
Service I:	1.00	1.00	1.00	1.00	1.00
Service III:	0.80	1.00	1.00	1.00	1.00
Strength I:	1.75	1.25	0.90	1.50	0.65
Fatigue I:	1.75	-	-	-	-

Ductility Factor:	1.00
Redundancy Factor:	1.00
Importance Factor:	1.00

PROJECT DESIGN PARAMETERS

MULTIPLIERS:

Trans len mult:	Bonded	1.00
	Debonded	1.00
Dev len mult:	Bonded	1.60
	Debonded	2.00

Camber & Deflection Multiplier (PCI ref.)

	Erection	Final
Prestress:	1.80	2.20
Self. Wt:	1.85	2.40
Deck + Haunch:		2.30
Diaphragm:		3.00
DL-Prec.:		3.00
DL-Comp.:		3.00

MOMENT AND SHEAR PROVISIONS:

Ultimate Moment Capacity, Mu-prvd computed:	Strain Compatibility method.
Ultimate Concrete Strain:	0.0030
Horizontal Shear, Beam and Slab effects in Vu:	INCLUDED
Negative Moment Design, Non-composite Moment effects in Mu:	INCLUDED

STRESS LIMITS (Art. 5.9.2):
STRESS LIMITS AT RELEASE BEFORE LOSSES (Using Advanced Settings):

		PRECAST	
Strength		4.50	ksi
Elasticity		4435.3	ksi
Max comp		2.93	ksi
Outer	15.00 %		
Max tens		-0.19	ksi
Max tens,	w/reinf	-0.81	ksi
Center	70.00 %		
Max tens		-0.19	ksi
Max tens,	w/reinf	-0.51	ksi

STRESS LIMITS AT FINAL AFTER LOSSES:

	PRECAST		DECK	
Strength	6.50	ksi	4.50	ksi
Elasticity	5007.55	ksi	4435.31	ksi

STRESS LIMITS AT FINAL 1 (P/S + DL + LL):

	PRECAST		DECK	
Max comp	3.90	ksi	2.70	ksi

STRESS LIMITS AT FINAL 2 (P/S + DL):

	PRECAST		DECK	
Max comp	2.93	ksi	2.02	ksi

FATIGUE I STRESS LIMITS AT FINAL 3 (50% P/S + 50% DL + F_LL) (Art. 5.5.3.1):

	PRECAST		DECK	
Max comp	2.60	ksi	-	ksi

SERVICE III (Tension):

	PRECAST		DECK	
Max tens	-0.48	ksi	-0.40	ksi

RESISTANCE FACTORS (Art. 5.5.4.2):

Flexure Reinforced	
Compression controlled sections	0.75
Tension controlled sections	0.90
Flexure Prestressed	
Compression controlled sections	0.75
Tension controlled sections	1.00
Shear	0.90

PRESTRESS LOSSES:

Time Dependent Losses, Approximate Method (Art.5.9.3.3)
Days to release = 0.75
Rel. Humid.(RH) = 75.0 %

RATING PARAMETERS

Rating Factors	References	Values
Condition Factor	Table 6A.4.2.3-1	1.00
System Factor for Flexural Effect	Table 6A.4.2.4-1	1.00
System Factor for Shear Effect	Art. 6A.4.2.4	1.00
ADTT	Section C3.6.1.1.2	5000
Dynamic Load Factor for Design Level	Art. 6A.4.3.3	0.33
Dynamic Load Factor for Legal and Permit Level	Table C6A.4.4.3-1	0.33

For Flexural Effect: Condition Factor * System Factor = 1.00 >= 0.85 (Art. 6A.4.2.1) OK
For Shear Effect: Condition Factor * System Factor = 1.00 >= 0.85 (Art. 6A.4.2.1 and 6A.4.2.4) OK

Dead Load Factors (Table 6A.4.2.2-1)

Limit State	DC	DW
Strength I	1.25	1.50
Strength II	1.25	1.50
Service I	1.00	1.00
Service III	1.00	1.00

Design Live Load Factors (Table 6A.4.3.2.2-1)

Limit State	Inventory	Operating
Strength I	1.75	1.35
Service I	-	-
Service III	0.80	-

Permit Live Load Factors (Table 6A.4.5.4.2a-1)

Load	Type	Frequency	Loading Condition	Permit Factor
FL120	Routine	Unlimited	Mix with traffic	1.30

Permit Live Load Stresses Factors

Limit State	Values
Service I	1.00
Service III	-

Allowable Stresses (ksi)

Rating Level	Concrete Compression	Concrete Tension	Steel
Design Inventory	0.60 x f'c = 3.90	0.19 x sqrt(f'c) = 0.48	0.90 x f'y = 218.70
Design Operating	0.60 x f'c = 3.90	0.19 x sqrt(f'c) = 0.48	0.90 x f'y = 218.70
Legal	0.60 x f'c = 3.90	0.19 x sqrt(f'c) = 0.48	-
Permit	0.60 x f'c = 3.90	0.19 x sqrt(f'c) = 0.48	0.90 x f'y = 218.70

Consider shear reinf. across plane (FDOT alternative): No

BEAM REINFORCEMENT

BEAM SPECIFIC MATERIAL PROPERTIES:

Span#, Beam#	Tendon-ID	Girder-f'ci ksi	Girder-f'c ksi	Deck-f'c ksi
Span:1, Beam:1	1/2-270K-LL	4.50	6.50	4.50
Span:1, Beam:2	1/2-270K-LL	4.50	6.50	4.50
Span:1, Beam:3	1/2-270K-LL	4.50	6.50	4.50
Span:1, Beam:4	1/2-270K-LL	4.50	6.50	4.50
Span:2, Beam:1	1/2-270K-LL	4.50	6.50	4.50
Span:2, Beam:2	1/2-270K-LL	4.50	6.50	4.50
Span:2, Beam:3	1/2-270K-LL	4.50	6.50	4.50
Span:2, Beam:4	1/2-270K-LL	4.50	6.50	4.50
Span:3, Beam:1	1/2-270K-LL	4.50	6.50	4.50
Span:3, Beam:2	1/2-270K-LL	4.50	6.50	4.50
Span:3, Beam:3	1/2-270K-LL	4.50	6.50	4.50
Span:3, Beam:4	1/2-270K-LL	4.50	6.50	4.50

Span:1, Beam:1

PRESTRESSED STEEL:

46 strands, 1/2-270K-LL, Low relaxation strands
Straight Pattern

END PATTERN (Ycg = 6.13 in):

13 @ 3.000 in	13 @ 5.000 in	11 @ 7.000 in	5 @ 9.000 in
1 @ 11.000 in	1 @ 13.000 in	1 @ 15.000 in	1 @ 17.000 in

REINFORCING STEEL:

Tension	steel:	
fy	60.0	ksi
Es	29000	ksi

Stirrups:

# legs	Size	fy (ksi)	Area (in2)	Spacing (in)	Start (ft)	End (ft)	Extends into Deck
2	US#4[M13]	60.0	0.40	3.00	0.2083	1.5000	Yes
2	US#4[M13]	60.0	0.40	6.00	1.5000	5.5000	Yes
1	US#4[M13]	60.0	0.20	3.00	5.5000	9.5000	Yes
1	US#4[M13]	60.0	0.20	4.00	9.5000	16.5000	Yes
1	US#4[M13]	60.0	0.20	6.00	16.5000	24.5000	Yes
1	US#4[M13]	60.0	0.20	8.00	24.5000	42.5000	Yes
1	US#4[M13]	60.0	0.20	10.00	42.5000	58.6667	Yes
1	US#4[M13]	60.0	0.20	8.00	58.6667	76.6667	Yes
1	US#4[M13]	60.0	0.20	6.00	76.6667	84.6667	Yes
1	US#4[M13]	60.0	0.20	4.00	84.6667	91.6667	Yes
1	US#4[M13]	60.0	0.20	3.00	91.6667	95.6667	Yes
2	US#4[M13]	60.0	0.40	6.00	95.6667	99.6667	Yes
2	US#4[M13]	60.0	0.40	3.00	99.6667	100.9583	Yes

Span:1, Beam:2

PRESTRESSED STEEL:
46 strands, 1/2-270K-LL, Low relaxation strands
Straight Pattern

END PATTERN (Ycg = 6.13 in):

13 @ 3.000 in	13 @ 5.000 in	11 @ 7.000 in	5 @ 9.000 in
1 @ 11.000 in	1 @ 13.000 in	1 @ 15.000 in	1 @ 17.000 in

REINFORCING STEEL:

Tension	steel:	
fy	60.0	ksi
Es	29000	ksi

Stirrups:

# legs	Size	fy (ksi)	Area (in2)	Spacing (in)	Start (ft)	End (ft)	Extends into Deck
2	US#4[M13]	60.0	0.40	3.00	0.2083	1.5000	Yes
2	US#4[M13]	60.0	0.40	6.00	1.5000	5.5000	Yes
1	US#4[M13]	60.0	0.20	3.00	5.5000	9.5000	Yes
1	US#4[M13]	60.0	0.20	4.00	9.5000	16.5000	Yes
1	US#4[M13]	60.0	0.20	6.00	16.5000	24.5000	Yes
1	US#4[M13]	60.0	0.20	8.00	24.5000	42.5000	Yes
1	US#4[M13]	60.0	0.20	10.00	42.5000	58.6667	Yes
1	US#4[M13]	60.0	0.20	8.00	58.6667	76.6667	Yes
1	US#4[M13]	60.0	0.20	6.00	76.6667	84.6667	Yes
1	US#4[M13]	60.0	0.20	4.00	84.6667	91.6667	Yes
1	US#4[M13]	60.0	0.20	3.00	91.6667	95.6667	Yes
2	US#4[M13]	60.0	0.40	6.00	95.6667	99.6667	Yes
2	US#4[M13]	60.0	0.40	3.00	99.6667	100.9583	Yes

Span:1, Beam:3

PRESTRESSED STEEL:
46 strands, 1/2-270K-LL, Low relaxation strands
Straight Pattern

END PATTERN (Ycg = 6.13 in):

13 @ 3.000 in	13 @ 5.000 in	11 @ 7.000 in	5 @ 9.000 in
1 @ 11.000 in	1 @ 13.000 in	1 @ 15.000 in	1 @ 17.000 in

REINFORCING STEEL:

Tension	steel:	
fy	60.0	ksi
Es	29000	ksi

Stirrups:

# legs	Size	fy (ksi)	Area (in2)	Spacing (in)	Start (ft)	End (ft)	Extends into Deck
2	US#4[M13]	60.0	0.40	3.00	0.2083	1.5000	Yes
2	US#4[M13]	60.0	0.40	6.00	1.5000	5.5000	Yes
1	US#4[M13]	60.0	0.20	3.00	5.5000	9.5000	Yes
1	US#4[M13]	60.0	0.20	4.00	9.5000	16.5000	Yes
1	US#4[M13]	60.0	0.20	6.00	16.5000	24.5000	Yes
1	US#4[M13]	60.0	0.20	8.00	24.5000	42.5000	Yes
1	US#4[M13]	60.0	0.20	10.00	42.5000	58.6667	Yes
1	US#4[M13]	60.0	0.20	8.00	58.6667	76.6667	Yes
1	US#4[M13]	60.0	0.20	6.00	76.6667	84.6667	Yes
1	US#4[M13]	60.0	0.20	4.00	84.6667	91.6667	Yes
1	US#4[M13]	60.0	0.20	3.00	91.6667	95.6667	Yes
2	US#4[M13]	60.0	0.40	6.00	95.6667	99.6667	Yes
2	US#4[M13]	60.0	0.40	3.00	99.6667	100.9583	Yes

Span:1, Beam:4

PRESTRESSED STEEL:
46 strands, 1/2-270K-LL, Low relaxation strands
Straight Pattern

END PATTERN (Ycg = 6.13 in):

13 @ 3.000 in	13 @ 5.000 in	11 @ 7.000 in	5 @ 9.000 in
1 @ 11.000 in	1 @ 13.000 in	1 @ 15.000 in	1 @ 17.000 in

REINFORCING STEEL:

Tension	steel:	
fy	60.0	ksi
Es	29000	ksi

Stirrups:

# legs	Size	fy (ksi)	Area (in2)	Spacing (in)	Start (ft)	End (ft)	Extends into Deck
2	US#4[M13]	60.0	0.40	3.00	0.2083	1.5000	Yes
2	US#4[M13]	60.0	0.40	6.00	1.5000	5.5000	Yes
1	US#4[M13]	60.0	0.20	3.00	5.5000	9.5000	Yes
1	US#4[M13]	60.0	0.20	4.00	9.5000	16.5000	Yes
1	US#4[M13]	60.0	0.20	6.00	16.5000	24.5000	Yes
1	US#4[M13]	60.0	0.20	8.00	24.5000	42.5000	Yes
1	US#4[M13]	60.0	0.20	10.00	42.5000	58.6667	Yes
1	US#4[M13]	60.0	0.20	8.00	58.6667	76.6667	Yes
1	US#4[M13]	60.0	0.20	6.00	76.6667	84.6667	Yes
1	US#4[M13]	60.0	0.20	4.00	84.6667	91.6667	Yes
1	US#4[M13]	60.0	0.20	3.00	91.6667	95.6667	Yes
2	US#4[M13]	60.0	0.40	6.00	95.6667	99.6667	Yes
2	US#4[M13]	60.0	0.40	3.00	99.6667	100.9583	Yes

Span:2, Beam:1

PRESTRESSED STEEL:
46 strands, 1/2-270K-LL, Low relaxation strands
Straight Pattern

END PATTERN (Ycg = 6.13 in):

13 @ 3.000 in	13 @ 5.000 in	11 @ 7.000 in	5 @ 9.000 in
1 @ 11.000 in	1 @ 13.000 in	1 @ 15.000 in	1 @ 17.000 in

REINFORCING STEEL:

Tension	steel:	
fy	60.0	ksi
Es	29000	ksi

Stirrups:

# legs	Size	fy (ksi)	Area (in2)	Spacing (in)	Start (ft)	End (ft)	Extends into Deck
2	US#4[M13]	60.0	0.40	3.00	0.2083	1.5000	Yes
2	US#4[M13]	60.0	0.40	6.00	1.5000	5.5000	Yes
1	US#4[M13]	60.0	0.20	3.00	5.5000	9.5000	Yes
1	US#4[M13]	60.0	0.20	4.00	9.5000	16.5000	Yes
1	US#4[M13]	60.0	0.20	6.00	16.5000	24.5000	Yes
1	US#4[M13]	60.0	0.20	8.00	24.5000	42.5000	Yes
1	US#4[M13]	60.0	0.20	10.00	42.5000	58.1667	Yes
1	US#4[M13]	60.0	0.20	8.00	58.1667	76.1667	Yes
1	US#4[M13]	60.0	0.20	6.00	76.1667	84.1667	Yes
1	US#4[M13]	60.0	0.20	4.00	84.1667	91.1667	Yes
1	US#4[M13]	60.0	0.20	3.00	91.1667	95.1667	Yes
2	US#4[M13]	60.0	0.40	6.00	95.1667	99.1667	Yes
2	US#4[M13]	60.0	0.40	3.00	99.1667	100.4583	Yes

Span:2, Beam:2

PRESTRESSED STEEL:
46 strands, 1/2-270K-LL, Low relaxation strands
Straight Pattern

END PATTERN (Ycg = 6.13 in):

13 @ 3.000 in	13 @ 5.000 in	11 @ 7.000 in	5 @ 9.000 in
1 @ 11.000 in	1 @ 13.000 in	1 @ 15.000 in	1 @ 17.000 in

REINFORCING STEEL:

Tension	steel:	
fy	60.0	ksi
Es	29000	ksi

Stirrups:

# legs	Size	fy (ksi)	Area (in2)	Spacing (in)	Start (ft)	End (ft)	Extends into Deck
2	US#4[M13]	60.0	0.40	3.00	0.2083	1.5000	Yes
2	US#4[M13]	60.0	0.40	6.00	1.5000	5.5000	Yes
1	US#4[M13]	60.0	0.20	3.00	5.5000	9.5000	Yes
1	US#4[M13]	60.0	0.20	4.00	9.5000	16.5000	Yes
1	US#4[M13]	60.0	0.20	6.00	16.5000	24.5000	Yes
1	US#4[M13]	60.0	0.20	8.00	24.5000	42.5000	Yes
1	US#4[M13]	60.0	0.20	10.00	42.5000	58.1667	Yes
1	US#4[M13]	60.0	0.20	8.00	58.1667	76.1667	Yes
1	US#4[M13]	60.0	0.20	6.00	76.1667	84.1667	Yes
1	US#4[M13]	60.0	0.20	4.00	84.1667	91.1667	Yes
1	US#4[M13]	60.0	0.20	3.00	91.1667	95.1667	Yes
2	US#4[M13]	60.0	0.40	6.00	95.1667	99.1667	Yes
2	US#4[M13]	60.0	0.40	3.00	99.1667	100.4583	Yes

Span:2, Beam:3

PRESTRESSED STEEL:
46 strands, 1/2-270K-LL, Low relaxation strands
Straight Pattern

END PATTERN (Ycg = 6.13 in):

13 @ 3.000 in	13 @ 5.000 in	11 @ 7.000 in	5 @ 9.000 in
1 @ 11.000 in	1 @ 13.000 in	1 @ 15.000 in	1 @ 17.000 in

REINFORCING STEEL:

Tension	steel:	
fy	60.0	ksi
Es	29000	ksi

Stirrups:

# legs	Size	fy (ksi)	Area (in2)	Spacing (in)	Start (ft)	End (ft)	Extends into Deck
2	US#4[M13]	60.0	0.40	3.00	0.2083	1.5000	Yes
2	US#4[M13]	60.0	0.40	6.00	1.5000	5.5000	Yes
1	US#4[M13]	60.0	0.20	3.00	5.5000	9.5000	Yes
1	US#4[M13]	60.0	0.20	4.00	9.5000	16.5000	Yes
1	US#4[M13]	60.0	0.20	6.00	16.5000	24.5000	Yes
1	US#4[M13]	60.0	0.20	8.00	24.5000	42.5000	Yes
1	US#4[M13]	60.0	0.20	10.00	42.5000	58.1667	Yes
1	US#4[M13]	60.0	0.20	8.00	58.1667	76.1667	Yes
1	US#4[M13]	60.0	0.20	6.00	76.1667	84.1667	Yes
1	US#4[M13]	60.0	0.20	4.00	84.1667	91.1667	Yes
1	US#4[M13]	60.0	0.20	3.00	91.1667	95.1667	Yes
2	US#4[M13]	60.0	0.40	6.00	95.1667	99.1667	Yes
2	US#4[M13]	60.0	0.40	3.00	99.1667	100.4583	Yes

Span:2, Beam:4

PRESTRESSED STEEL:
46 strands, 1/2-270K-LL, Low relaxation strands
Straight Pattern

END PATTERN (Ycg = 6.13 in):

13 @ 3.000 in	13 @ 5.000 in	11 @ 7.000 in	5 @ 9.000 in
1 @ 11.000 in	1 @ 13.000 in	1 @ 15.000 in	1 @ 17.000 in

REINFORCING STEEL:

Tension	steel:	
fy	60.0	ksi
Es	29000	ksi

Stirrups:

# legs	Size	fy (ksi)	Area (in2)	Spacing (in)	Start (ft)	End (ft)	Extends into Deck
2	US#4[M13]	60.0	0.40	3.00	0.2083	1.5000	Yes
2	US#4[M13]	60.0	0.40	6.00	1.5000	5.5000	Yes
1	US#4[M13]	60.0	0.20	3.00	5.5000	9.5000	Yes
1	US#4[M13]	60.0	0.20	4.00	9.5000	16.5000	Yes
1	US#4[M13]	60.0	0.20	6.00	16.5000	24.5000	Yes
1	US#4[M13]	60.0	0.20	8.00	24.5000	42.5000	Yes
1	US#4[M13]	60.0	0.20	10.00	42.5000	58.1667	Yes
1	US#4[M13]	60.0	0.20	8.00	58.1667	76.1667	Yes
1	US#4[M13]	60.0	0.20	6.00	76.1667	84.1667	Yes
1	US#4[M13]	60.0	0.20	4.00	84.1667	91.1667	Yes
1	US#4[M13]	60.0	0.20	3.00	91.1667	95.1667	Yes
2	US#4[M13]	60.0	0.40	6.00	95.1667	99.1667	Yes
2	US#4[M13]	60.0	0.40	3.00	99.1667	100.4583	Yes

Span:3, Beam:1

PRESTRESSED STEEL:
46 strands, 1/2-270K-LL, Low relaxation strands
Straight Pattern

END PATTERN (Ycg = 6.13 in):

13 @ 3.000 in	13 @ 5.000 in	11 @ 7.000 in	5 @ 9.000 in
1 @ 11.000 in	1 @ 13.000 in	1 @ 15.000 in	1 @ 17.000 in

REINFORCING STEEL:

Tension	steel:	
fy	60.0	ksi
Es	29000	ksi

Stirrups:

# legs	Size	fy (ksi)	Area (in2)	Spacing (in)	Start (ft)	End (ft)	Extends into Deck
2	US#4[M13]	60.0	0.40	3.00	0.2083	1.5000	Yes
2	US#4[M13]	60.0	0.40	6.00	1.5000	5.5000	Yes
1	US#4[M13]	60.0	0.20	3.00	5.5000	9.5000	Yes
1	US#4[M13]	60.0	0.20	4.00	9.5000	16.5000	Yes
1	US#4[M13]	60.0	0.20	6.00	16.5000	24.5000	Yes
1	US#4[M13]	60.0	0.20	8.00	24.5000	42.5000	Yes
1	US#4[M13]	60.0	0.20	10.00	42.5000	58.6667	Yes
1	US#4[M13]	60.0	0.20	8.00	58.6667	76.6667	Yes
1	US#4[M13]	60.0	0.20	6.00	76.6667	84.6667	Yes
1	US#4[M13]	60.0	0.20	4.00	84.6667	91.6667	Yes
1	US#4[M13]	60.0	0.20	3.00	91.6667	95.6667	Yes
2	US#4[M13]	60.0	0.40	6.00	95.6667	99.6667	Yes
2	US#4[M13]	60.0	0.40	3.00	99.6667	100.9583	Yes

Span:3, Beam:2

PRESTRESSED STEEL:
46 strands, 1/2-270K-LL, Low relaxation strands
Straight Pattern

END PATTERN (Ycg = 6.13 in):

13 @ 3.000 in	13 @ 5.000 in	11 @ 7.000 in	5 @ 9.000 in
1 @ 11.000 in	1 @ 13.000 in	1 @ 15.000 in	1 @ 17.000 in

REINFORCING STEEL:

Tension	steel:	
fy	60.0	ksi
Es	29000	ksi

Stirrups:

# legs	Size	fy (ksi)	Area (in2)	Spacing (in)	Start (ft)	End (ft)	Extends into Deck
2	US#4[M13]	60.0	0.40	3.00	0.2083	1.5000	Yes
2	US#4[M13]	60.0	0.40	6.00	1.5000	5.5000	Yes
1	US#4[M13]	60.0	0.20	3.00	5.5000	9.5000	Yes
1	US#4[M13]	60.0	0.20	4.00	9.5000	16.5000	Yes
1	US#4[M13]	60.0	0.20	6.00	16.5000	24.5000	Yes
1	US#4[M13]	60.0	0.20	8.00	24.5000	42.5000	Yes
1	US#4[M13]	60.0	0.20	10.00	42.5000	58.6667	Yes
1	US#4[M13]	60.0	0.20	8.00	58.6667	76.6667	Yes
1	US#4[M13]	60.0	0.20	6.00	76.6667	84.6667	Yes
1	US#4[M13]	60.0	0.20	4.00	84.6667	91.6667	Yes
1	US#4[M13]	60.0	0.20	3.00	91.6667	95.6667	Yes
2	US#4[M13]	60.0	0.40	6.00	95.6667	99.6667	Yes
2	US#4[M13]	60.0	0.40	3.00	99.6667	100.9583	Yes

Span:3, Beam:3

PRESTRESSED STEEL:
46 strands, 1/2-270K-LL, Low relaxation strands
Straight Pattern

END PATTERN (Ycg = 6.13 in):

13 @ 3.000 in	13 @ 5.000 in	11 @ 7.000 in	5 @ 9.000 in
1 @ 11.000 in	1 @ 13.000 in	1 @ 15.000 in	1 @ 17.000 in

REINFORCING STEEL:

Tension	steel:	
fy	60.0	ksi
Es	29000	ksi

Stirrups:

# legs	Size	fy (ksi)	Area (in2)	Spacing (in)	Start (ft)	End (ft)	Extends into Deck
2	US#4[M13]	60.0	0.40	3.00	0.2083	1.5000	Yes
2	US#4[M13]	60.0	0.40	6.00	1.5000	5.5000	Yes
1	US#4[M13]	60.0	0.20	3.00	5.5000	9.5000	Yes
1	US#4[M13]	60.0	0.20	4.00	9.5000	16.5000	Yes
1	US#4[M13]	60.0	0.20	6.00	16.5000	24.5000	Yes
1	US#4[M13]	60.0	0.20	8.00	24.5000	42.5000	Yes
1	US#4[M13]	60.0	0.20	10.00	42.5000	58.6667	Yes
1	US#4[M13]	60.0	0.20	8.00	58.6667	76.6667	Yes
1	US#4[M13]	60.0	0.20	6.00	76.6667	84.6667	Yes
1	US#4[M13]	60.0	0.20	4.00	84.6667	91.6667	Yes
1	US#4[M13]	60.0	0.20	3.00	91.6667	95.6667	Yes
2	US#4[M13]	60.0	0.40	6.00	95.6667	99.6667	Yes
2	US#4[M13]	60.0	0.40	3.00	99.6667	100.9583	Yes

Span:3, Beam:4

PRESTRESSED STEEL:
46 strands, 1/2-270K-LL, Low relaxation strands
Straight Pattern

END PATTERN (Ycg = 6.13 in):

13 @ 3.000 in	13 @ 5.000 in	11 @ 7.000 in	5 @ 9.000 in
1 @ 11.000 in	1 @ 13.000 in	1 @ 15.000 in	1 @ 17.000 in

REINFORCING STEEL:

Tension	steel:	
fy	60.0	ksi
Es	29000	ksi

Stirrups:

# legs	Size	fy (ksi)	Area (in2)	Spacing (in)	Start (ft)	End (ft)	Extends into Deck
2	US#4[M13]	60.0	0.40	3.00	0.2083	1.5000	Yes
2	US#4[M13]	60.0	0.40	6.00	1.5000	5.5000	Yes
1	US#4[M13]	60.0	0.20	3.00	5.5000	9.5000	Yes
1	US#4[M13]	60.0	0.20	4.00	9.5000	16.5000	Yes
1	US#4[M13]	60.0	0.20	6.00	16.5000	24.5000	Yes
1	US#4[M13]	60.0	0.20	8.00	24.5000	42.5000	Yes
1	US#4[M13]	60.0	0.20	10.00	42.5000	58.6667	Yes
1	US#4[M13]	60.0	0.20	8.00	58.6667	76.6667	Yes
1	US#4[M13]	60.0	0.20	6.00	76.6667	84.6667	Yes
1	US#4[M13]	60.0	0.20	4.00	84.6667	91.6667	Yes
1	US#4[M13]	60.0	0.20	3.00	91.6667	95.6667	Yes
2	US#4[M13]	60.0	0.40	6.00	95.6667	99.6667	Yes
2	US#4[M13]	60.0	0.40	3.00	99.6667	100.9583	Yes

f. LEAP Concrete Bridge Output – Span 4, 5 and 6

Bentley			Sheet #	1
			Job #	
Program:	LEAP® Bridge Concrete CONNECT Edition	BASE Consultants	Designed	KV
Module:	Precast/Prestressed Girder	Copyright © Bentley Systems, Inc. 2021	Date	Jan/7/2021
Version:	21.00.00.24	www.bentley.com Phone: 1-800-778-4277	Checked	RK
File Name:	**Span4-5-6-EB(5ft).lbcx**		Date	Jan/7/2021

CONSOLIDATED FDOT RATING REPORT

Load Rating Summary for Prestressed Concrete Bridges

All Bridge

Design Load Rating - Summary

Limit State	Vehicle	Weight (tons)	LF LL	LF DC	LF DW	Moment DF	Mom or Str RF	Mom or Str Tons	Mom or Str Location	Mom or Str Dim	Controlling Span/Beam	Shear DF	Shear RF	Shear Tons	Shear Location	Shear Dim	Controlling Span/Beam
Strength I (Inv)	HL93 Design Load	-	1.75	1.25	1.50	1.12	1.69	-	0.4L	39.97	1/1	1.11	1.55	-	0.2L	19.73	3/3
Strength I (Op)	HL93 Design Load	-	1.35	1.25	1.50	1.12	2.19	-	0.4L	39.97	1/1	1.11	2.02	-	0.2L	19.73	3/2
Service III (Inv)	HL93 Design Load	-	0.80	1.00	1.00	1.12	1.75	-	0.5L	50.08	1/1	-	-	-	-	-	-
Service III (Op)	HL93 Design Load	-	0.80	1.00	1.00	1.12	1.75	-	0.5L	50.08	1/1	-	-	-	-	-	-

Design Load Rating

Span	Beam	Limit State	Vehicle	Weight (tons)	LF LL	LF DC	LF DW	Moment DF	Mom or Str RF	Mom or Str Tons	Mom or Str Location	Mom or Str Dim	Shear DF	Shear RF	Shear Tons	Shear Location	Shear Dim
1	1	Strength I (Inv)	HL93 Design Load	-	1.75	1.25	1.50	1.12	1.69	-	0.4L	39.97	1.09	1.58	-	0.8L	80.43
1	1	Strength I (Op)	HL93 Design Load	-	1.35	1.25	1.50	1.12	2.19	-	0.4L	39.97	1.09	2.07	-	0.8L	80.43
1	1	Service III (Inv)	HL93 Design Load	-	0.80	1.00	1.00	1.12	1.75	-	0.5L	50.08	-	-	-	-	-
1	1	Service III (Op)	HL93 Design Load	-	0.80	1.00	1.00	1.12	1.75	-	0.5L	50.08	-	-	-	-	-
1	2	Strength I (Inv)	HL93 Design Load	-	1.75	1.25	1.50	0.94	1.99	-	0.4L	39.97	1.10	1.55	-	0.8L	80.43
1	2	Strength I (Op)	HL93 Design Load	-	1.35	1.25	1.50	0.94	2.58	-	0.4L	39.97	1.10	2.03	-	0.8L	80.43
1	2	Service III (Inv)	HL93 Design Load	-	0.80	1.00	1.00	0.94	2.00	-	0.5L	50.08	-	-	-	-	-
1	2	Service III (Op)	HL93 Design Load	-	0.80	1.00	1.00	0.94	2.00	-	0.5L	50.08	-	-	-	-	-
1	3	Strength I (Inv)	HL93 Design Load	-	1.75	1.25	1.50	0.94	1.99	-	0.4L	39.97	1.10	1.55	-	0.8L	80.43
1	3	Strength I (Op)	HL93 Design	-	1.35	1.25	1.50	0.94	2.58	-	0.4L	39.97	1.10	2.03	-	0.8L	80.43

Bentley			Sheet #	3
			Job #	
Program:	LEAP® Bridge Concrete CONNECT Edition	BASE Consultants	Designed	KV
Module:	Precast/Prestressed Girder	Copyright © Bentley Systems, Inc. 2021	Date	Jan/7/2021
Version:	21.00.00.24	www.bentley.com Phone: 1-800-778-4277	Checked	RK
File Name:	**Span4-5-6-EB(5ft).lbcx**		Date	Jan/7/2021

Span	Beam	Limit State	Vehicle	Weight (tons)	LF LL	LF DC	LF DW	Moment DF	Mom or Str RF	Mom or Str Tons	Mom or Str Location	Mom or Str Dim	Shear DF	Shear RF	Shear Tons	Shear Location	Shear Dim
1	3	Service III (Inv)	Load HL93 Design	-	0.80	1.00	1.00	0.94	2.00	-	0.5L	50.08	-	-	-	-	-
1	3	Service III (Op)	Load HL93 Design	-	0.80	1.00	1.00	0.94	2.00	-	0.5L	50.08	-	-	-	-	-
1	4	Strength I (Inv)	Load HL93 Design	-	1.75	1.25	1.50	1.03	1.85	-	0.4L	39.97	1.00	1.74	-	0.8L	80.43
1	4	Strength I (Op)	Load HL93 Design	-	1.35	1.25	1.50	1.03	2.40	-	0.4L	39.97	1.00	2.28	-	0.8L	80.43
1	4	Service III (Inv)	Load HL93 Design	-	0.80	1.00	1.00	1.03	1.94	-	0.5L	50.08	-	-	-	-	-
1	4	Service III (Op)	Load HL93 Design	-	0.80	1.00	1.00	1.03	1.94	-	0.5L	50.08	-	-	-	-	-
2	1	Strength I (Inv)	Load HL93 Design	-	1.75	1.25	1.50	1.04	2.38	-	0.5L	49.83	1.01	1.89	-	Critical	6.35
2	1	Strength I (Op)	Load HL93 Design	-	1.35	1.25	1.50	1.04	3.08	-	0.5L	49.83	1.01	2.46	-	Critical	6.35
2	1	Service III (Inv)	Load HL93 Design	-	0.80	1.00	1.00	1.04	2.52	-	0.5L	49.83	-	-	-	-	-
2	1	Service III (Op)	Load HL93 Design	-	0.80	1.00	1.00	1.04	2.52	-	0.5L	49.83	-	-	-	-	-

Bentley			Sheet #	4
			Job #	
Program:	LEAP® Bridge Concrete CONNECT Edition	BASE Consultants	Designed	KV
Module:	Precast/Prestressed Girder	Copyright © Bentley Systems, Inc. 2021	Date	Jan/7/2021
Version:	21.00.00.24	www.bentley.com Phone: 1-800-778-4277	Checked	RK
File Name:	**Span4-5-6-EB(5ft).lbcx**		Date	Jan/7/2021

Span	Beam	Limit State	Vehicle	Weight (tons)	LF LL	LF DC	LF DW	Moment DF	Mom or Str RF	Mom or Str Tons	Mom or Str Location	Mom or Str Dim	Shear DF	Shear RF	Shear Tons	Shear Location	Shear Dim
2	2	Strength I (Inv)	Load HL93 Design	-	1.75	1.25	1.50	0.94	2.55	-	0.5L	49.83	1.10	1.69	-	Critical	6.36
2	2	Strength I (Op)	Load HL93 Design	-	1.35	1.25	1.50	0.94	3.30	-	0.5L	49.83	1.10	2.20	-	Critical	6.36
2	2	Service III (Inv)	Load HL93 Design	-	0.80	1.00	1.00	0.94	2.61	-	0.5L	49.83	-	-	-	-	-
2	2	Service III (Op)	Load HL93 Design	-	0.80	1.00	1.00	0.94	2.61	-	0.5L	49.83	-	-	-	-	-
2	3	Strength I (Inv)	Load HL93 Design	-	1.75	1.25	1.50	0.94	2.55	-	0.5L	49.83	1.10	1.69	-	Critical	6.36
2	3	Strength I (Op)	Load HL93 Design	-	1.35	1.25	1.50	0.94	3.30	-	0.5L	49.83	1.10	2.20	-	Critical	6.36
2	3	Service III (Inv)	Load HL93 Design	-	0.80	1.00	1.00	0.94	2.61	-	0.5L	49.83	-	-	-	-	-
2	3	Service III (Op)	Load HL93 Design	-	0.80	1.00	1.00	0.94	2.61	-	0.5L	49.83	-	-	-	-	-
2	4	Strength I (Inv)	Load HL93 Design	-	1.75	1.25	1.50	1.12	2.17	-	0.5L	49.83	1.09	1.72	-	Critical	6.35
2	4	Strength I (Op)	Load HL93 Design	-	1.35	1.25	1.50	1.12	2.81	-	0.5L	49.83	1.09	2.24	-	Critical	6.35

Span	Beam	Limit State	Vehicle	Weight (tons)	LF LL	LF DC	LF DW	Moment DF	Mom or Str RF	Mom or Str Tons	Mom or Str Location	Mom or Str Dim	Shear DF	Shear RF	Shear Tons	Shear Location	Shear Dim
2	4	Service III (Inv)	Load HL93 Design	-	0.80	1.00	1.00	1.12	2.27	-	0.5L	49.83	-	-	-	-	-
2	4	Service III (Op)	Load HL93 Design	-	0.80	1.00	1.00	1.12	2.27	-	0.5L	49.83	-	-	-	-	-
3	1	Strength I (Inv)	Load HL93 Design	-	1.75	1.25	1.50	1.03	1.85	-	0.6L	60.20	1.01	1.73	-	0.2L	19.73
3	1	Strength I (Op)	Load HL93 Design	-	1.35	1.25	1.50	1.03	2.40	-	0.6L	60.20	1.01	2.27	-	0.2L	19.73
3	1	Service III (Inv)	Load HL93 Design	-	0.80	1.00	1.00	1.03	1.94	-	0.5L	50.08	-	-	-	-	-
3	1	Service III (Op)	Load HL93 Design	-	0.80	1.00	1.00	1.03	1.94	-	0.5L	50.08	-	-	-	-	-
3	2	Strength I (Inv)	Load HL93 Design	-	1.75	1.25	1.50	0.94	1.99	-	0.6L	60.20	1.11	1.55	-	0.2L	19.73
3	2	Strength I (Op)	Load HL93 Design	-	1.35	1.25	1.50	0.94	2.58	-	0.6L	60.20	1.11	2.02	-	0.2L	19.73
3	2	Service III (Inv)	Load HL93 Design	-	0.80	1.00	1.00	0.94	2.00	-	0.5L	50.08	-	-	-	-	-
3	2	Service III (Op)	HL93 Design	-	0.80	1.00	1.00	0.94	2.00	-	0.5L	50.08	-	-	-	-	-

Span	Beam	Limit State	Vehicle	Weight (tons)	LF LL	LF DC	LF DW	Moment DF	Mom or Str RF	Mom or Str Tons	Mom or Str Location	Mom or Str Dim	Shear DF	Shear RF	Shear Tons	Shear Location	Shear Dim
3	3	Strength I (Inv)	Load HL93 Design Load	-	1.75	1.25	1.50	0.94	1.99	-	0.6L	60.20	1.11	1.55	-	0.2L	19.73
3	3	Strength I (Op)	Load HL93 Design Load	-	1.35	1.25	1.50	0.94	2.58	-	0.6L	60.20	1.11	2.02	-	0.2L	19.73
3	3	Service III (Inv)	Load HL93 Design Load	-	0.80	1.00	1.00	0.94	2.00	-	0.5L	50.08	-	-	-	-	-
3	3	Service III (Op)	Load HL93 Design Load	-	0.80	1.00	1.00	0.94	2.00	-	0.5L	50.08	-	-	-	-	-
3	4	Strength I (Inv)	Load HL93 Design Load	-	1.75	1.25	1.50	1.12	1.69	-	0.6L	60.20	1.09	1.57	-	0.2L	19.73
3	4	Strength I (Op)	Load HL93 Design Load	-	1.35	1.25	1.50	1.12	2.19	-	0.6L	60.20	1.09	2.06	-	0.2L	19.73
3	4	Service III (Inv)	Load HL93 Design Load	-	0.80	1.00	1.00	1.12	1.75	-	0.5L	50.08	-	-	-	-	-
3	4	Service III (Op)	Load HL93 Design Load	-	0.80	1.00	1.00	1.12	1.75	-	0.5L	50.08	-	-	-	-	-

Bentley				Sheet #	7
				Job #	
Program:	LEAP® Bridge Concrete CONNECT Edition	BASE Consultants		Designed	KV
Module:	Precast/Prestressed Girder	Copyright © Bentley Systems, Inc. 2021		Date	Jan/7/2021
Version:	21.00.00.24	www.bentley.com	Phone: 1-800-778-4277	Checked	RK
File Name:	**Span4-5-6-EB(5ft).lbcx**			Date	Jan/7/2021

Permit Load Rating - Summary

Limit State	Vehicle	Weight (tons)	LF LL	LF DC	LF DW	Moment DF	Mom or Str RF	Mom or Str Tons	Mom or Str Location	Mom or Str Dim	Controlling Span/Beam	Shear DF	Shear RF	Shear Tons	Shear Location	Shear Dim	Controlli Span/Be
Strength II	FL120	60.00	1.30	1.25	1.50	1.12	1.92	115.06	0.4L	39.97	1/1	1.11	1.71	102.79	0.2L	19.73	3/2
Service I	FL120	60.00	1.00	1.00	1.00	1.12	1.94	116.51	0.5L	50.08	1/1	-	-	-	-	-	-

Bentley			Sheet #	8
			Job #	
Program:	LEAP® Bridge Concrete CONNECT Edition	BASE Consultants	Designed	KV
Module:	Precast/Prestressed Girder	Copyright © Bentley Systems, Inc. 2021	Date	Jan/7/2021
Version:	21.00.00.24	www.bentley.com Phone: 1-800-778-4277	Checked	RK
File Name:	**Span4-5-6-EB(5ft).lbcx**		Date	Jan/7/2021

Permit Load Rating

Span	Beam	Limit State	Vehicle	Weight (tons)	LF LL	LF DC	LF DW	Moment DF	Mom or Str RF	Mom or Str Tons	Mom or Str Location	Mom or Str Dim	Shear DF	Shear RF	Shear Tons	Shear Location	Shear Dim
1	1	Strength II	FL120	60.00	1.30	1.25	1.50	1.12	1.92	115.06	0.4L	39.97	1.09	1.75	104.84	0.8L	80.43
1	1	Service I	FL120	60.00	1.00	1.00	1.00	1.12	1.94	116.51	0.5L	50.08	-	-	-	-	-
1	2	Strength II	FL120	60.00	1.30	1.25	1.50	0.94	2.25	135.08	0.4L	39.97	1.10	1.72	103.19	0.8L	80.43
1	2	Service I	FL120	60.00	1.00	1.00	1.00	0.94	2.11	126.70	0.5L	50.08	-	-	-	-	-
1	3	Strength II	FL120	60.00	1.30	1.25	1.50	0.94	2.25	135.08	0.4L	39.97	1.10	1.72	103.19	0.8L	80.43
1	3	Service I	FL120	60.00	1.00	1.00	1.00	0.94	2.11	126.70	0.5L	50.08	-	-	-	-	-
1	4	Strength II	FL120	60.00	1.30	1.25	1.50	1.03	2.10	126.01	0.4L	39.97	1.00	1.93	115.62	0.8L	80.43
1	4	Service I	FL120	60.00	1.00	1.00	1.00	1.03	2.09	125.62	0.5L	50.08	-	-	-	-	-
2	1	Strength II	FL120	60.00	1.30	1.25	1.50	1.04	2.62	157.23	0.5L	49.83	1.01	2.16	129.80	0.2L	19.63
2	1	Service I	FL120	60.00	1.00	1.00	1.00	1.04	2.50	149.78	0.5L	49.83	-	-	-	-	-
2	2	Strength II	FL120	60.00	1.30	1.25	1.50	0.94	2.81	168.54	0.5L	49.83	1.10	1.93	115.92	0.2L	19.63
2	2	Service I	FL120	60.00	1.00	1.00	1.00	0.94	2.50	149.80	0.5L	49.83	-	-	-	-	-
2	3	Strength II	FL120	60.00	1.30	1.25	1.50	0.94	2.81	168.54	0.5L	49.83	1.10	1.93	115.92	0.2L	19.63
2	3	Service I	FL120	60.00	1.00	1.00	1.00	0.94	2.50	149.80	0.5L	49.83	-	-	-	-	-
2	4	Strength II	FL120	60.00	1.30	1.25	1.50	1.12	2.39	143.55	0.5L	49.83	1.09	1.96	117.74	0.2L	19.63
2	4	Service I	FL120	60.00	1.00	1.00	1.00	1.12	2.30	138.22	0.5L	49.83	-	-	-	-	-
3	1	Strength II	FL120	60.00	1.30	1.25	1.50	1.03	2.10	126.01	0.6L	60.20	1.01	1.92	115.16	0.2L	19.73
3	1	Service I	FL120	60.00	1.00	1.00	1.00	1.03	2.09	125.62	0.5L	50.08	-	-	-	-	-
3	2	Strength II	FL120	60.00	1.30	1.25	1.50	0.94	2.25	135.08	0.6L	60.20	1.11	1.71	102.79	0.2L	19.73

Span	Beam	Limit State	Vehicle	Weight (tons)	LF LL	LF DC	LF DW	Moment DF	Mom or Str RF	Mom or Str Tons	Mom or Str Location	Mom or Str Dim	Shear DF	Shear RF	Shear Tons	Shear Location	Shear Dim
3	2	Service I	FL120	60.00	1.00	1.00	1.00	0.94	2.11	126.70	0.5L	50.08	-	-	-	-	-
3	3	Strength II	FL120	60.00	1.30	1.25	1.50	0.94	2.25	135.08	0.6L	60.20	1.11	1.71	102.79	0.2L	19.73
3	3	Service I	FL120	60.00	1.00	1.00	1.00	0.94	2.11	126.70	0.5L	50.08	-	-	-	-	-
3	4	Strength II	FL120	60.00	1.30	1.25	1.50	1.12	1.92	115.06	0.6L	60.20	1.09	1.74	104.43	0.2L	19.73
3	4	Service I	FL120	60.00	1.00	1.00	1.00	1.12	1.94	116.51	0.5L	50.08	-	-	-	-	-

BEAM REINFORCEMENT

BEAM SPECIFIC MATERIAL PROPERTIES:

Span#, Beam#	Tendon-ID	Girder-f'ci ksi	Girder-f'c ksi	Deck-f'c ksi
Span:1, Beam:1	1/2-270K-LL	4.50	6.50	4.50
Span:1, Beam:2	1/2-270K-LL	4.50	6.50	4.50
Span:1, Beam:3	1/2-270K-LL	4.50	6.50	4.50
Span:1, Beam:4	1/2-270K-LL	4.50	6.50	4.50
Span:2, Beam:1	1/2-270K-LL	4.50	6.50	4.50
Span:2, Beam:2	1/2-270K-LL	4.50	6.50	4.50
Span:2, Beam:3	1/2-270K-LL	4.50	6.50	4.50
Span:2, Beam:4	1/2-270K-LL	4.50	6.50	4.50
Span:3, Beam:1	1/2-270K-LL	4.50	6.50	4.50
Span:3, Beam:2	1/2-270K-LL	4.50	6.50	4.50
Span:3, Beam:3	1/2-270K-LL	4.50	6.50	4.50
Span:3, Beam:4	1/2-270K-LL	4.50	6.50	4.50

Span:1, Beam:1

PRESTRESSED STEEL:
46 strands, 1/2-270K-LL, Low relaxation strands
Straight Pattern

END PATTERN (Ycg = 6.13 in):

13 @ 3.000 in	13 @ 5.000 in	11 @ 7.000 in	5 @ 9.000 in
1 @ 11.000 in	1 @ 13.000 in	1 @ 15.000 in	1 @ 17.000 in

REINFORCING STEEL:

Tension	steel:	
fy	60.0	ksi
Es	29000	ksi

Stirrups:

# legs	Size	fy (ksi)	Area (in2)	Spacing (in)	Start (ft)	End (ft)	Extends into Deck
2	US#4[M13]	60.0	0.40	3.00	0.2083	1.5000	Yes
2	US#4[M13]	60.0	0.40	6.00	1.5000	5.5000	Yes
1	US#4[M13]	60.0	0.20	3.00	5.5000	9.5000	Yes
1	US#4[M13]	60.0	0.20	4.00	9.5000	16.5000	Yes
1	US#4[M13]	60.0	0.20	8.00	16.5000	34.5000	Yes
1	US#4[M13]	60.0	0.20	10.00	34.5000	59.9997	Yes
1	US#4[M13]	60.0	0.20	10.00	59.9997	66.6667	Yes
1	US#4[M13]	60.0	0.20	8.00	66.6667	84.6667	Yes
1	US#4[M13]	60.0	0.20	4.00	84.6667	91.6667	Yes
1	US#4[M13]	60.0	0.20	3.00	91.6667	95.6667	Yes
2	US#4[M13]	60.0	0.40	6.00	95.6667	99.6667	Yes
2	US#4[M13]	60.0	0.40	3.00	99.6667	100.9583	Yes

Span:1, Beam:2

PRESTRESSED STEEL:
46 strands, 1/2-270K-LL, Low relaxation strands
Straight Pattern

END PATTERN (Ycg = 6.13 in):

13 @ 3.000 in	13 @ 5.000 in	11 @ 7.000 in	5 @ 9.000 in
1 @ 11.000 in	1 @ 13.000 in	1 @ 15.000 in	1 @ 17.000 in

REINFORCING STEEL:

Tension	steel:	
fy	60.0	ksi
Es	29000	ksi

Stirrups:

# legs	Size	fy (ksi)	Area (in2)	Spacing (in)	Start (ft)	End (ft)	Extends into Deck
2	US#4[M13]	60.0	0.40	3.00	0.2083	1.5000	Yes
2	US#4[M13]	60.0	0.40	6.00	1.5000	5.5000	Yes
1	US#4[M13]	60.0	0.20	3.00	5.5000	9.5000	Yes
1	US#4[M13]	60.0	0.20	4.00	9.5000	16.5000	Yes
1	US#4[M13]	60.0	0.20	8.00	16.5000	34.5000	Yes
1	US#4[M13]	60.0	0.20	10.00	34.5000	59.9997	Yes
1	US#4[M13]	60.0	0.20	10.00	59.9997	66.6667	Yes
1	US#4[M13]	60.0	0.20	8.00	66.6667	84.6667	Yes
1	US#4[M13]	60.0	0.20	4.00	84.6667	91.6667	Yes
1	US#4[M13]	60.0	0.20	3.00	91.6667	95.6667	Yes
2	US#4[M13]	60.0	0.40	6.00	95.6667	99.6667	Yes
2	US#4[M13]	60.0	0.40	3.00	99.6667	100.9583	Yes

Span:1, Beam:3

PRESTRESSED STEEL:
46 strands, 1/2-270K-LL, Low relaxation strands
Straight Pattern

END PATTERN (Ycg = 6.13 in):

13 @ 3.000 in	13 @ 5.000 in	11 @ 7.000 in	5 @ 9.000 in
1 @ 11.000 in	1 @ 13.000 in	1 @ 15.000 in	1 @ 17.000 in

REINFORCING STEEL:

Tension	steel:	
fy	60.0	ksi
Es	29000	ksi

Stirrups:

# legs	Size	fy (ksi)	Area (in2)	Spacing (in)	Start (ft)	End (ft)	Extends into Deck
2	US#4[M13]	60.0	0.40	3.00	0.2083	1.5000	Yes
2	US#4[M13]	60.0	0.40	6.00	1.5000	5.5000	Yes
1	US#4[M13]	60.0	0.20	3.00	5.5000	9.5000	Yes
1	US#4[M13]	60.0	0.20	4.00	9.5000	16.5000	Yes
1	US#4[M13]	60.0	0.20	8.00	16.5000	34.5000	Yes
1	US#4[M13]	60.0	0.20	10.00	34.5000	59.9997	Yes
1	US#4[M13]	60.0	0.20	10.00	59.9997	66.6667	Yes
1	US#4[M13]	60.0	0.20	8.00	66.6667	84.6667	Yes
1	US#4[M13]	60.0	0.20	4.00	84.6667	91.6667	Yes
1	US#4[M13]	60.0	0.20	3.00	91.6667	95.6667	Yes
2	US#4[M13]	60.0	0.40	6.00	95.6667	99.6667	Yes
2	US#4[M13]	60.0	0.40	3.00	99.6667	100.9583	Yes

Span:1, Beam:4

PRESTRESSED STEEL:
46 strands, 1/2-270K-LL, Low relaxation strands
Straight Pattern

END PATTERN (Ycg = 6.13 in):

13 @ 3.000 in	13 @ 5.000 in	11 @ 7.000 in	5 @ 9.000 in
1 @ 11.000 in	1 @ 13.000 in	1 @ 15.000 in	1 @ 17.000 in

REINFORCING STEEL:

Tension	steel:	
fy	60.0	ksi
Es	29000	ksi

Stirrups:

# legs	Size	fy (ksi)	Area (in2)	Spacing (in)	Start (ft)	End (ft)	Extends into Deck
2	US#4[M13]	60.0	0.40	3.00	0.2083	1.5000	Yes
2	US#4[M13]	60.0	0.40	6.00	1.5000	5.5000	Yes
1	US#4[M13]	60.0	0.20	3.00	5.5000	9.5000	Yes
1	US#4[M13]	60.0	0.20	4.00	9.5000	16.5000	Yes
1	US#4[M13]	60.0	0.20	8.00	16.5000	34.5000	Yes
1	US#4[M13]	60.0	0.20	10.00	34.5000	59.9997	Yes
1	US#4[M13]	60.0	0.20	10.00	59.9997	66.6667	Yes
1	US#4[M13]	60.0	0.20	8.00	66.6667	84.6667	Yes
1	US#4[M13]	60.0	0.20	4.00	84.6667	91.6667	Yes
1	US#4[M13]	60.0	0.20	3.00	91.6667	95.6667	Yes
2	US#4[M13]	60.0	0.40	6.00	95.6667	99.6667	Yes
2	US#4[M13]	60.0	0.40	3.00	99.6667	100.9583	Yes

Span:2, Beam:1

PRESTRESSED STEEL:
46 strands, 1/2-270K-LL, Low relaxation strands
Straight Pattern

END PATTERN (Ycg = 6.13 in):

13 @ 3.000 in	13 @ 5.000 in	11 @ 7.000 in	5 @ 9.000 in
1 @ 11.000 in	1 @ 13.000 in	1 @ 15.000 in	1 @ 17.000 in

REINFORCING STEEL:

Tension	steel:	
fy	60.0	ksi
Es	29000	ksi

Stirrups:

# legs	Size	fy (ksi)	Area (in2)	Spacing (in)	Start (ft)	End (ft)	Extends into Deck
2	US#4[M13]	60.0	0.40	3.00	0.2083	1.5000	Yes
2	US#4[M13]	60.0	0.40	6.00	1.5000	5.5000	Yes
1	US#4[M13]	60.0	0.20	3.00	5.5000	9.5000	Yes
1	US#4[M13]	60.0	0.20	4.00	9.5000	16.5000	Yes
1	US#4[M13]	60.0	0.20	8.00	16.5000	34.5000	Yes
1	US#4[M13]	60.0	0.20	10.00	34.5000	59.4997	Yes
1	US#4[M13]	60.0	0.20	10.00	59.4997	66.1667	Yes
1	US#4[M13]	60.0	0.20	8.00	66.1667	84.1667	Yes
1	US#4[M13]	60.0	0.20	4.00	84.1667	91.1667	Yes
1	US#4[M13]	60.0	0.20	3.00	91.1667	95.1667	Yes
2	US#4[M13]	60.0	0.40	6.00	95.1667	99.1667	Yes
2	US#4[M13]	60.0	0.40	3.00	99.1667	100.4583	Yes

Span:2, Beam:2

PRESTRESSED STEEL:
46 strands, 1/2-270K-LL, Low relaxation strands
Straight Pattern

END PATTERN (Ycg = 6.13 in):

13 @ 3.000 in	13 @ 5.000 in	11 @ 7.000 in	5 @ 9.000 in
1 @ 11.000 in	1 @ 13.000 in	1 @ 15.000 in	1 @ 17.000 in

REINFORCING STEEL:

Tension	steel:	
fy	60.0	ksi
Es	29000	ksi

Stirrups:

# legs	Size	fy (ksi)	Area (in2)	Spacing (in)	Start (ft)	End (ft)	Extends into Deck
2	US#4[M13]	60.0	0.40	3.00	0.2083	1.5000	Yes
2	US#4[M13]	60.0	0.40	6.00	1.5000	5.5000	Yes
1	US#4[M13]	60.0	0.20	3.00	5.5000	9.5000	Yes
1	US#4[M13]	60.0	0.20	4.00	9.5000	16.5000	Yes
1	US#4[M13]	60.0	0.20	8.00	16.5000	34.5000	Yes
1	US#4[M13]	60.0	0.20	10.00	34.5000	59.4997	Yes
1	US#4[M13]	60.0	0.20	10.00	59.4997	66.1667	Yes
1	US#4[M13]	60.0	0.20	8.00	66.1667	84.1667	Yes
1	US#4[M13]	60.0	0.20	4.00	84.1667	91.1667	Yes
1	US#4[M13]	60.0	0.20	3.00	91.1667	95.1667	Yes
2	US#4[M13]	60.0	0.40	6.00	95.1667	99.1667	Yes
2	US#4[M13]	60.0	0.40	3.00	99.1667	100.4583	Yes

Span:2, Beam:3

PRESTRESSED STEEL:
46 strands, 1/2-270K-LL, Low relaxation strands
Straight Pattern

END PATTERN (Ycg = 6.13 in):

13 @ 3.000 in	13 @ 5.000 in	11 @ 7.000 in	5 @ 9.000 in
1 @ 11.000 in	1 @ 13.000 in	1 @ 15.000 in	1 @ 17.000 in

REINFORCING STEEL:

Tension	steel:	
fy	60.0	ksi
Es	29000	ksi

Stirrups:

# legs	Size	fy (ksi)	Area (in2)	Spacing (in)	Start (ft)	End (ft)	Extends into Deck
2	US#4[M13]	60.0	0.40	3.00	0.2083	1.5000	Yes
2	US#4[M13]	60.0	0.40	6.00	1.5000	5.5000	Yes
1	US#4[M13]	60.0	0.20	3.00	5.5000	9.5000	Yes
1	US#4[M13]	60.0	0.20	4.00	9.5000	16.5000	Yes
1	US#4[M13]	60.0	0.20	8.00	16.5000	34.5000	Yes
1	US#4[M13]	60.0	0.20	10.00	34.5000	59.4997	Yes
1	US#4[M13]	60.0	0.20	10.00	59.4997	66.1667	Yes
1	US#4[M13]	60.0	0.20	8.00	66.1667	84.1667	Yes
1	US#4[M13]	60.0	0.20	4.00	84.1667	91.1667	Yes
1	US#4[M13]	60.0	0.20	3.00	91.1667	95.1667	Yes
2	US#4[M13]	60.0	0.40	6.00	95.1667	99.1667	Yes
2	US#4[M13]	60.0	0.40	3.00	99.1667	100.4583	Yes

Span:2, Beam:4

PRESTRESSED STEEL:
46 strands, 1/2-270K-LL, Low relaxation strands
Straight Pattern

END PATTERN (Ycg = 6.13 in):

13 @ 3.000 in	13 @ 5.000 in	11 @ 7.000 in	5 @ 9.000 in
1 @ 11.000 in	1 @ 13.000 in	1 @ 15.000 in	1 @ 17.000 in

REINFORCING STEEL:

Tension	steel:	
fy	60.0	ksi
Es	29000	ksi

Stirrups:

# legs	Size	fy (ksi)	Area (in2)	Spacing (in)	Start (ft)	End (ft)	Extends into Deck
2	US#4[M13]	60.0	0.40	3.00	0.2083	1.5000	Yes
2	US#4[M13]	60.0	0.40	6.00	1.5000	5.5000	Yes
1	US#4[M13]	60.0	0.20	3.00	5.5000	9.5000	Yes
1	US#4[M13]	60.0	0.20	4.00	9.5000	16.5000	Yes
1	US#4[M13]	60.0	0.20	8.00	16.5000	34.5000	Yes
1	US#4[M13]	60.0	0.20	10.00	34.5000	59.4997	Yes
1	US#4[M13]	60.0	0.20	10.00	59.4997	66.1667	Yes
1	US#4[M13]	60.0	0.20	8.00	66.1667	84.1667	Yes
1	US#4[M13]	60.0	0.20	4.00	84.1667	91.1667	Yes
1	US#4[M13]	60.0	0.20	3.00	91.1667	95.1667	Yes
2	US#4[M13]	60.0	0.40	6.00	95.1667	99.1667	Yes
2	US#4[M13]	60.0	0.40	3.00	99.1667	100.4583	Yes

Span:3, Beam:1

PRESTRESSED STEEL:
46 strands, 1/2-270K-LL, Low relaxation strands
Straight Pattern

END PATTERN (Ycg = 6.13 in):

13 @ 3.000 in	13 @ 5.000 in	11 @ 7.000 in	5 @ 9.000 in
1 @ 11.000 in	1 @ 13.000 in	1 @ 15.000 in	1 @ 17.000 in

REINFORCING STEEL:

Tension	steel:	
fy	60.0	ksi
Es	29000	ksi

Stirrups:

# legs	Size	fy (ksi)	Area (in2)	Spacing (in)	Start (ft)	End (ft)	Extends into Deck
2	US#4[M13]	60.0	0.40	3.00	0.2083	1.5000	Yes
2	US#4[M13]	60.0	0.40	6.00	1.5000	5.5000	Yes
1	US#4[M13]	60.0	0.20	3.00	5.5000	9.5000	Yes
1	US#4[M13]	60.0	0.20	4.00	9.5000	16.5000	Yes
1	US#4[M13]	60.0	0.20	8.00	16.5000	34.5000	Yes
1	US#4[M13]	60.0	0.20	10.00	34.5000	59.9997	Yes
1	US#4[M13]	60.0	0.20	10.00	59.9997	66.6667	Yes
1	US#4[M13]	60.0	0.20	8.00	66.6667	84.6667	Yes
1	US#4[M13]	60.0	0.20	4.00	84.6667	91.6667	Yes
1	US#4[M13]	60.0	0.20	3.00	91.6667	95.6667	Yes
2	US#4[M13]	60.0	0.40	6.00	95.6667	99.6667	Yes
2	US#4[M13]	60.0	0.40	3.00	99.6667	100.9583	Yes

Span:3, Beam:2

PRESTRESSED STEEL:
46 strands, 1/2-270K-LL, Low relaxation strands
Straight Pattern

END PATTERN (Ycg = 6.13 in):

13 @ 3.000 in	13 @ 5.000 in	11 @ 7.000 in	5 @ 9.000 in
1 @ 11.000 in	1 @ 13.000 in	1 @ 15.000 in	1 @ 17.000 in

REINFORCING STEEL:

Tension	steel:	
fy	60.0	ksi
Es	29000	ksi

Stirrups:

# legs	Size	fy (ksi)	Area (in2)	Spacing (in)	Start (ft)	End (ft)	Extends into Deck
2	US#4[M13]	60.0	0.40	3.00	0.2083	1.5000	Yes
2	US#4[M13]	60.0	0.40	6.00	1.5000	5.5000	Yes
1	US#4[M13]	60.0	0.20	3.00	5.5000	9.5000	Yes
1	US#4[M13]	60.0	0.20	4.00	9.5000	16.5000	Yes
1	US#4[M13]	60.0	0.20	8.00	16.5000	34.5000	Yes
1	US#4[M13]	60.0	0.20	10.00	34.5000	59.9997	Yes
1	US#4[M13]	60.0	0.20	10.00	59.9997	66.6667	Yes
1	US#4[M13]	60.0	0.20	8.00	66.6667	84.6667	Yes
1	US#4[M13]	60.0	0.20	4.00	84.6667	91.6667	Yes
1	US#4[M13]	60.0	0.20	3.00	91.6667	95.6667	Yes
2	US#4[M13]	60.0	0.40	6.00	95.6667	99.6667	Yes
2	US#4[M13]	60.0	0.40	3.00	99.6667	100.9583	Yes

Span:3, Beam:3

PRESTRESSED STEEL:
46 strands, 1/2-270K-LL, Low relaxation strands
Straight Pattern

END PATTERN (Ycg = 6.13 in):

13 @ 3.000 in	13 @ 5.000 in	11 @ 7.000 in	5 @ 9.000 in
1 @ 11.000 in	1 @ 13.000 in	1 @ 15.000 in	1 @ 17.000 in

REINFORCING STEEL:

Tension	steel:	
fy	60.0	ksi
Es	29000	ksi

Stirrups:

# legs	Size	fy (ksi)	Area (in2)	Spacing (in)	Start (ft)	End (ft)	Extends into Deck
2	US#4[M13]	60.0	0.40	3.00	0.2083	1.5000	Yes
2	US#4[M13]	60.0	0.40	6.00	1.5000	5.5000	Yes
1	US#4[M13]	60.0	0.20	3.00	5.5000	9.5000	Yes
1	US#4[M13]	60.0	0.20	4.00	9.5000	16.5000	Yes
1	US#4[M13]	60.0	0.20	8.00	16.5000	34.5000	Yes
1	US#4[M13]	60.0	0.20	10.00	34.5000	59.9997	Yes
1	US#4[M13]	60.0	0.20	10.00	59.9997	66.6667	Yes
1	US#4[M13]	60.0	0.20	8.00	66.6667	84.6667	Yes
1	US#4[M13]	60.0	0.20	4.00	84.6667	91.6667	Yes
1	US#4[M13]	60.0	0.20	3.00	91.6667	95.6667	Yes
2	US#4[M13]	60.0	0.40	6.00	95.6667	99.6667	Yes
2	US#4[M13]	60.0	0.40	3.00	99.6667	100.9583	Yes

Span:3, Beam:4

PRESTRESSED STEEL:
46 strands, 1/2-270K-LL, Low relaxation strands
Straight Pattern

END PATTERN (Ycg = 6.13 in):

13 @ 3.000 in	13 @ 5.000 in	11 @ 7.000 in	5 @ 9.000 in
1 @ 11.000 in	1 @ 13.000 in	1 @ 15.000 in	1 @ 17.000 in

REINFORCING STEEL:

Tension	steel:	
fy	60.0	ksi
Es	29000	ksi

Stirrups:

# legs	Size	fy (ksi)	Area (in2)	Spacing (in)	Start (ft)	End (ft)	Extends into Deck
2	US#4[M13]	60.0	0.40	3.00	0.2083	1.5000	Yes
2	US#4[M13]	60.0	0.40	6.00	1.5000	5.5000	Yes
1	US#4[M13]	60.0	0.20	3.00	5.5000	9.5000	Yes
1	US#4[M13]	60.0	0.20	4.00	9.5000	16.5000	Yes
1	US#4[M13]	60.0	0.20	8.00	16.5000	34.5000	Yes
1	US#4[M13]	60.0	0.20	10.00	34.5000	59.9997	Yes
1	US#4[M13]	60.0	0.20	10.00	59.9997	66.6667	Yes
1	US#4[M13]	60.0	0.20	8.00	66.6667	84.6667	Yes
1	US#4[M13]	60.0	0.20	4.00	84.6667	91.6667	Yes
1	US#4[M13]	60.0	0.20	3.00	91.6667	95.6667	Yes
2	US#4[M13]	60.0	0.40	6.00	95.6667	99.6667	Yes
2	US#4[M13]	60.0	0.40	3.00	99.6667	100.9583	Yes

f. LEAP Concrete Bridge Output – Span 4, 5 and 6

Bentley			Sheet #	1
			Job #	414-227
Program:	LEAP® Bridge Concrete CONNECT Edition	BASE Consultants	Designed	KV
Module:	Precast/Prestressed Girder	Copyright © Bentley Systems, Inc. 2020	Date	Jan/8/2021
Version:	20.00.00.46	www.bentley.com Phone: 1-800-778-4277	Checked	RK
File Name:	**Span4-5-6-EB(5ft).lbcx**		Date	Mar/7/2021

Load Rating Summary for Prestressed Concrete Bridges

Span:1, Beam:1

Design Load Rating

Limit State	Vehicle	Weight (tons)	LF LL	LF DC	LF DW	Moment DF	Mom or Str RF	Mom or Str Tons	Mom or Str Location	Mom or Str Dim	Shear DF	Shear RF	Shear Tons	Shear Location	Shear Dim
Strength I (Inv)	HL93 Design Load	-	1.75	1.25	1.50	1.03	1.87	-	0.5L	50.08	1.00	1.41	-	0.8L	80.43
Strength I (Op)	HL93 Design Load	-	1.35	1.25	1.50	1.03	2.42	-	0.5L	50.08	1.00	1.85	-	0.8L	80.43
Service III (Inv)	HL93 Design Load	-	0.80	1.00	1.00	1.03	1.95	-	0.5L	50.08	-	-	-	-	-
Service III (Op)	HL93 Design Load	-	0.80	1.00	1.00	1.03	1.95	-	0.5L	50.08	-	-	-	-	-

Permit Load Rating

Limit State	Vehicle	Weight (tons)	LF LL	LF DC	LF DW	Moment DF	Mom or Str RF	Mom or Str Tons	Mom or Str Location	Mom or Str Dim	Shear DF	Shear RF	Shear Tons	Shear Location	Shear Dim
Strength II	FL120	60.00	1.30	1.25	1.50	1.03	2.13	127.79	0.5L	50.08	1.00	1.56	93.52	0.8L	80.43
Service I	FL120	60.00	1.00	1.00	1.00	1.03	2.10	126.08	0.5L	50.08	-	-	-	-	-

Rating Factors	References	Values
Condition Factor	Table 6A.4.2.3-1	1.00
System Factor for Flexural Effect	Table 6A.4.2.4-1	1.00
System Factor for Shear Effect	Art. 6A.4.2.4	1.00
ADTT	Section C3.6.1.1.2	5000
Dynamic Load Factor for Design Level	Art. 6A.4.3.3	0.33
Dynamic Load Factor for Legal and Permit Level	Table C6A.4.4.3-1	0.33

For Flexural Effect: Condition Factor * System Factor = 1.00 >= 0.85 (Art. 6A.4.2.1) OK
For Shear Effect: Condition Factor * System Factor = 1.00 >= 0.85 (Art. 6A.4.2.1 and 6A.4.2.4) OK

Dead Load Factors (Table 6A.4.2.2-1)

Limit State	DC	DW
Strength I	1.25	1.50
Strength II	1.25	1.50
Service I	1.00	1.00
Service III	1.00	1.00

Design Live Load Factors (Table 6A.4.3.2.2-1)

Limit State	Inventory	Operating
Strength I	1.75	1.35
Service I	-	-
Service III	0.80	-

Permit Live Load Factors (Table 6A.4.5.4.2a-1)

Load	Type	Frequency	Loading Condition	Permit Factor
FL120	Routine	Unlimited	Mix with traffic	1.30

Permit Live Load Stresses Factors

Limit State	Values
Service I	1.00
Service III	-

Allowable Stresses (ksi)

Rating Level	Concrete Compression	Concrete Tension	Steel
Design Inventory	0.60 x f'c = 3.90	0.19 x sqrt(f'c) = 0.48	0.90 x f'y = 218.70
Design Operating	0.60 x f'c = 3.90	0.19 x sqrt(f'c) = 0.48	0.90 x f'y = 218.70
Legal	0.60 x f'c = 3.90	0.19 x sqrt(f'c) = 0.48	-
Permit	0.60 x f'c = 3.90	0.19 x sqrt(f'c) = 0.48	0.90 x f'y = 218.70

Consider shear reinf. across plane (FDOT alternative): No

Span:1, Beam:1
A) Design Live Load Rating

Inventory Rating Level

Shear and Moment RF's are for Strength I Limit State
Tension Stress RF's are for Service III Limit State
Prestress tendon RF is for Service I Limit State

HL93 Design Load Positive Live Load

Location	Moment	K	Mom-K	Shear	CTens-T	CTens-B	PSStT
Bearing : 0.0	N.A.	N.A.	N.A.	N.A.	N.A.	N.A.	N.A.
Transfer : 2.0	12.15	1.00	12.15	N.A.	-	29.21	-
Critical : 6.2	-	-	-	2.96	-	-	-
0.1L : 9.6	4.79	1.00	4.79	2.44	-	6.74	12.34
0.2L : 19.7	2.67	1.00	2.67	1.84	-	3.28	3.79
0.3L : 29.9	2.11	1.00	2.11	2.57	-	2.31	2.69
0.4L : 40.0	1.99	1.00	1.99	3.27	-	2.00	2.40
0.5L : 50.1	1.87	1.00	1.87	2.98	-	1.95	2.33
0.6L : 60.2	2.29	1.00	2.29	2.12	-	2.31	2.66
0.7L : 70.3	2.90	1.00	2.90	1.82	-	3.22	3.44
0.8L : 80.4	4.88	1.00	4.88	1.41	-	6.09	6.66
0.9L : 90.6	11.91	1.00	11.91	1.98	-	16.90	-
Critical : 93.8	-	-	-	1.78	-	-	-
Transfer : 98.2	11.19	1.00	11.19	N.A.	-	26.12	-
Bearing : 100.2	N.A.	N.A.	N.A.	N.A.	N.A.	N.A.	N.A.

Operating Rating Level

Shear and Moment RF's are for Strength I Limit State

HL93 Design Load Positive Live Load

Location	Moment	K	Mom-K	Shear
Bearing : 0.0	N.A.	N.A.	N.A.	N.A.
Transfer : 2.0	15.75	1.00	15.75	N.A.
Critical : 6.2	-	-	-	3.86
0.1L : 9.6	6.21	1.00	6.21	3.20
0.2L : 19.7	3.46	1.00	3.46	2.42
0.3L : 29.9	2.74	1.00	2.74	3.39
0.4L : 40.0	2.58	1.00	2.58	4.32
0.5L : 50.1	2.42	1.00	2.42	3.92
0.6L : 60.2	2.96	1.00	2.96	2.79
0.7L : 70.3	3.76	1.00	3.76	2.38
0.8L : 80.4	6.33	1.00	6.33	1.85
0.9L : 90.6	15.44	1.00	15.44	2.59
Critical : 93.8	-	-	-	2.31
Transfer : 98.2	14.50	1.00	14.50	N.A.
Bearing : 100.2	N.A.	N.A.	N.A.	N.A.

Span:1, Beam:1
C) Permit Live Load Rating

Shear and Moment RF's are for Strength II Limit State
Prestress tendon RF is for Service I Limit State

FL120 Positive Live Load

Location	Moment	K	Mom-K	Shear	PSStT
Bearing : 0.0	N.A.	N.A.	N.A.	N.A.	N.A.
Transfer : 2.0	12.90	1.00	12.90	N.A.	-
Critical : 6.2	-	-	-	3.18	-
0.1L : 9.6	5.25	1.00	5.25	2.61	9.34
0.2L : 19.7	2.96	1.00	2.96	1.92	3.27
0.3L : 29.9	2.37	1.00	2.37	2.64	2.38
0.4L : 40.0	2.25	1.00	2.25	3.30	2.14
0.5L : 50.1	2.13	1.00	2.13	3.15	2.10
0.6L : 60.2	2.62	1.00	2.62	2.27	2.40
0.7L : 70.3	3.33	1.00	3.33	1.97	3.10
0.8L : 80.4	5.50	1.00	5.50	1.56	5.81
0.9L : 90.6	18.13	1.00	18.13	2.28	-
Critical : 94.0	-	-	-	2.82	-
Transfer : 98.2	15.76	1.00	15.76	N.A.	-
Bearing : 100.2	N.A.	N.A.	N.A.	N.A.	N.A.

Notation:
CComp-T/ CComp-B - Concrete Compression at Top/Bottom;
CTens-T/ CTens-B - Concrete Tension at Top/Bottom;
PSStT - Prestress Steel Tension.

SR 414 Over Lake Bosse

CFX Project No 414-227

Existing Bridge No. 770074

(Future Westbound Bridge)

Bridge Load Rating Calculations

August 2021

By

Base Consultants, Inc.

1214 East Concord Street

Orlando, FL 32803

Certificate of Authorization No. 27343

Ram Kozhikote, P.E., No. 44022

Table of Contents

1. Summary -Load Rating Summary Form
2. Narrative
3. Plans
4. Calculations
    a. LEAP Concrete Bridge Input – Span 1 and 2
    b. LEAP Concrete Bridge Output – Span 1 and 2
    c. LEAP Steel Bridge Input – Span 3
    d. LEAP Steel Bridge Output – Span 3
    e. LEAP Concrete Bridge Input – Span 4, 5 and 6
    f. LEAP Concrete Bridge Output – Span 4, 5 and 6

1. Summary - Load Rating Summary Form

Bridge No.	**770074**	**Analysis Method:**	**LRFR-LRFD**
Location	**SR 414 Over Lake Bosse (Future Westbound Bridge)**		
Description	**Steel Plate Girder and Florida Bulb Tee - 6 Spans**		

FDOT Bridge Load Rating Summary Form (Page 1 of 1)

Rating Type	Rating Type	Gross Axle Weight (tons)	Moment/Shear/Service		Dead Load Factor	Live Load Factor	Live Load Distrib. Factor (axles)	Rating Factor	Span No. - Girder No., Interior/Exterior, %Span Length	RF·Weight (tons)
Level	**Vehicle**	**Weight**	**Member Type**	**Limit**	**DC**	**LL**	**LLDF**	**RF**	**Governing Location**	**RATING**
Inventory	HL93	36	Steel	Strength, Moment	1.25/0.90	1.75	NA	1.199	Span No. 3 - Girder No. 4, Exterior, 50%Span Length	43.2
Operating	HL93	36	Steel	Strength, Moment	1.25/0.90	1.35	NA	1.555	Span No. 3 - Girder No. 4, Exterior, 50%Span Length	56.0
Permit	FL120	60	Steel	Strength, Moment	1.25/0.90	1.35	NA	1.489	Span No. 3 - Girder No. 4, Exterior, 50%Span Length	89.3
Permit Max Span	FL120	60	Steel	Strength, Moment	1.25/0.90	1.35	NA	1.489	Span No. 3 - Girder No. 4, Exterior, 50%Span Length	89.3
Legal	SU2	17	Prestressed	NA	NA	NA				-1
	SU3	33	Prestressed	NA	NA	NA				-1
	SU4	35	Prestressed	NA	NA	NA				-1
	C3	28	Prestressed	NA	NA	NA				-1
	C4	36.7	Prestressed	NA	NA	NA				-1
	C5	40	Prestressed	NA	NA	NA				-1
	ST5	40	Prestressed	NA	NA	NA				-1
Emergency Vehicle (EV)	EV2	28.75	Prestressed	NA	NA	NA				-1
	EV3	43	Prestressed	NA	NA	NA				-1

Original Design Load	HS20 or HS20-S16-44		
Rating Type, *Analysis*	LRFR-LRFD		
Distribution Method	Refined analysis		
Impact Factor	33.0%	(axle loading)	
FL120 Gov. Span Length	210.0	(feet)	
Minimum Span Length	92.5	(feet)	
Recommended Posting	At/Above legal loads. Posting Not Required.		
Recommended SU Posting	99	(tons)	
Recommended C Posting	99	(tons)	
Recommended ST5 Posting	99	(tons)	
Owner	04 City or Municipal Highway Agency		
Location	Carries interstate traffic.		
EV Posting	No. EV posting is not recommended. The FAST Act does not apply		
Floor Beam Present?	No		
Segmental Bridge?	No		
Project No. & Reason	NA	Other	
Plans Status	Design or Construction		

Performed by:	Karan Vekariya	Date:	08/02/21
Checked by:	Ram Kozhikote, PE	Date:	08/02/21

This item has been digitally signed and sealed by

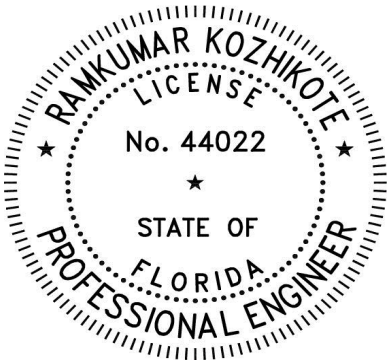

on the date adjacent to the seal. Printed copies of this document are not considered signed and sealed and the signature must be verified on any electronic copies.

Comments: Existing bridge is being modified by removing the raised median to allow for construction of a new viaduct to span overhead. This will separate the existing bridge into two bridge structures, one Eastbound and one Westbound. This report reviews the Westbound structure.

This 01-01-2021 summary follows the FDOT Bridge Load Rating Manual (BLRM), and the FDOT BMS Coding Guide.
*Recommended SU Posting levels for Florida SU trucks adequately restricts AASHTO SU trucks; see BLRM Chapter 7.

fdot.gov/maintenance/LoadRating.shtm

2. Narrative

NARRATIVE

Bridge Arrangement

Bridge No. 770074 is an existing six span structure that carries SR414 over Lake Bosse. This bridge is 700’-0” long and 129’-0” wide, carrying both Eastbound and Westbound lanes with a raised median. Its superstructure consists of Florida Bulb Tee 72 beams, Steel Plate Girders and an 8-inch deck. This report is to determine the viability of separating the bridge into two structures, both 49’-10 1/8” wide, to allow for a proposed elevated Viaduct to span over the existing bridge. The supports of the proposed viaducts are to run parallel with the existing bridge structure where the current raised median and the two interior adjacent lanes are shown on existing plans. The interior lanes are not used under existing lane configuration and this portion is striped off. The proposed modification will eliminate the raised median and provide two bridges, each carrying one 11’-0” lane, one 12’-0” lane, a 6’-0” interior shoulder with a new barrier, an 8’-0” exterior shoulder, and a 5’-0” sidewalk protected by an existing barrier and a railing. On the Westbound bridge structure, there will be an existing utility load that will be shared by the four existing bridge beams. The future Westbound bridge structure will consist of the same superstructure beams and deck as the existing structure.

Methodology

The existing structure was originally designed in 1994. The proposed modifications shown in this report were designed with AASHTO LRFD (Load and Resistance Factor Design) criteria and subsequently rated with AASHTO LRFR (Load and Resistance Factor Rating).

Software

The beams have been Load Rated with LEAP Bridge Concrete/Steel Connect Version 21.

Beam Numbering

The beam numbering found in the FDOT Load Rating Summary Tables correspond with the Superstructure Plan/Section Sheet included in the Design Plans Section of this Report.

3. Plans

Existing Plans

GENERAL NOTES

A. SPECIFICATIONS

1. CONSTRUCTION:
   a) Florida Department Of Transportation Standard Specifications For Road And Bridge Construction, (1991 Edition) And Supplements Thereto.
2. DESIGN:
   a) AASHTO Standard Specifications For Highway Bridges, (1992 Edition), And Applicable Interims Through 1993.
   b) Florida Department Of Transportation Structures Design Guidelines, 1987, Through 1994 Revision.
   c) "INSITU Soil Improvement Techniques" AASHTO – AGC – ARTBA Task Force 27 Ground Modifications Techniques Janurary 1990.

B. DESIGN LOADINGS

1. DEAD LOADS:
   a) Unit Weight Of Reinforced Concrete: 150 PCF
   b) Future Wearing Surface: 15 PSF
   c) Traffic Railing: 418 PLF
   d) Pedestrian Railing: 200 PLF
   e) Stay In Place Forms: Design Includes An Allowance For 20 PSF Over The Projected Plan Area For The Unit Weight Of Metal Forms And Concrete Required To Fill The Form Flutes. Stay In Place Forms Shall Not Be Used For Cantilever Portions Of The Deck Slab.
2. LIVE LOADS:
   HS 20–44 With Impact (Prestressed Beams Designed For An Additional 5% Live Load). See Also Sheet B–3 For Crane Loads.
3. WIND LOADS:
   a) Basic Wind: In Accordance With AASHTO Specifications.
4. DESIGN TEMPERATURES:

SUPERSTRUCTURE:	MEAN	RISE FROM MEAN	FALL FROM MEAN	RANGE
–Concrete Beams	70°F	+25°F	–25°F	50°F
–Composite Steel Beams	70°F	+35°F	–35°F	70°F

   –Concrete Thermal Coefficient = 0.000005 Per Degree F
   (Based On Florida Limerock Aggregate)
   –Steel Thermal Coefficient = 0.0000065 Per Degree F
5. EARTHQUAKE:
   a) Seismic Performance Category B
      Acceleration Coefficient = 0.025
      Little Wekiva River – Per AASHTO 4.5 Of Division 1–A
      Lake Bosse – Category B
6. DISTRIBUTION VALUES:

	INTERIOR BEAMS	EXTERIOR BEAMS
a) Live Load (As Function Of Beam Spacing, S)	S/5.5	S/5.5
b) Traffic Barrier (PLF)	Per Structures Design Guidelines 10.12	

C. DESIGN METHOD

a) Strength Design Method (Load Factor Design) Except That The Design Of Prestressed Concrete Piles, Spread Footing And The Loads On Piles Have Been Computed For Service Loads. Prestressed Beams Are Service Load Design And Checked For Ultimate Capacity.

D. FOUNDATION

a) All Piles And Pile Driving Operations Shall Be In Accordance With F.D.O.T. Supplemental Specification Section 455.
b) Pile Loads:

Location	Pile Type	Adjusted Design Capacity	Design Service Load
Little Wekiva River	18"Sq. Prestressed Conc.	87 Tons	92 Tons
Lake Bosse	20"ø Steel Pipe (Conc. Filled)	115 Tons	130 Tons

c) Pile Design At Little Wekiva River Includes 5 Ton Per Pile Allowance Due To Negative Skin Friction.
   Pile Design At Lake Bosse Includes 15 Ton Per Pile Allowance Due To Negative Skin Friction.
d) Where MSE Walls Are To Be Used, End Bent Piles Shall Be Driven Prior To Placing The MSE Embankment.
e) The Portion Of The Piles Within The MSE Embankment (Above Existing Grade) Shall Be Wrapped With Two Independent Sheets Of 6 Mil Polyethylene In Accordance With F.D.O.T. Supplemental Specification 459.

E. DECK SEQUENCE POURING AND SCREEDING

a) Decks Shall Be Placed As Follows: After Pouring The First Unit Succeeding Pours Shall Begin At The End Away From And Proceed Toward The Previously Placed Unit.
b) The Riding Surface Of Bridge Deck Shall Be Screeded To Finish Grade With No Allowance For Permanent Camber.

F. END BENTS

a) All Exposed Edges Shall Be Chamfered 3/4" Unless Otherwise Noted.
b) Top Of Traffic Railing Shall Be Constructed Parallel To Grade.

G. MATERIALS

1. CONCRETE:
   Concrete Shall Be In Accordance With F.D.O.T. Supplemental Specification Section 346.
   a)

CLASS	Maximum Design Compressive Stress (psi)	Minimum 28–Day Compressive Strength (psi)	Design Unit Weight Incl. Reinforcing (pcf)	Modulus Of Elasticity (ksi)	Location Of Concrete In Structure
II (BRIDGE DECK)	fc = 1,800	f'c = 4,500	150	4,500	C.I.P. Conc. For Superstructure In Slightly Aggressive Environment Only
III	fc = 2000	f'c = 5000	150	3,700	MSE Walls
IV	fc = 2,200	f'c = 5,500	150	3,900	All C.I.P. Concrete In Extremely Aggressive Environment (Substructure)
IV	fc = 2,200	f'c = 5,500	150	3,900	Prestressed Conc. Beams @ Little Wekiva River
V	fc = 2,600	f'c = 6,500	150	4,200	Prestressed Conc. Beams @ Lake Bosse
V (SPECIAL)	fc = 2,400	f'c = 6,000	150	4,000	Prestressed Conc. Piles

   NOTE: Class V (Special) Concrete Shall Conform To All The Requirements Of Class V Concrete Except For The Minimum 28–Day Compressive Strength.
   b) Provide 3/4" Chamfers On All Exposed Edges Except As Otherwise Noted.
   c) Construction Joints Will Be Permitted Only At Location Indicated On Plans. Additional Construction Joints Or Alterations To Those Shown Shall Require Approval Of The Engineer.
2. REINFORCING STEEL:
   a) Prestressing Strands Used For Precast Beams Shall Be 270KSI, Low Relaxation, 1/2" Diameter Strands With With Nominal Steel Area Equal To 0.153 Sq. In. Prestressing Strands Used For Precast Piles Shall Be In Accordance With Index 600 (See Sheet A–4 & A–5).
   b) Reinforcement Shall Be ASTM A615, Grade 60, (f_s= 24,000 psi).
   c) All Dimensions Pertaining To The Location Of Reinforcing Are To The Centerline Of Bar Except Where The Clear Dimension Is Shown To Face Of Concrete.
   d) Reinforcement Detail Dimensions Are Out To Out Of Bars.
   e) E.F. Denotes "Each Face",
      N.F. Denotes "Near Face",
      F.F. Denotes "Far Face".
      F.F.B.W. Denotes "Front Face Of Back Wall".
   f) Concrete Cover For Reinforcement Shall Be:
      –Superstructure (CIP): 2"
      –Substructure (CIP): 4"
      –Precast, Pretensioned Piling: 3"
      –Concrete Cast Against Earth: 4 1/2"
   g) Concrete Covers Shown In The Plans Do Not Include Placement And Fabrication Tolerances Unless Shown As "Minimum Cover". See FDOT Standard Specifications For Allowable Tolerances.
3. STRUCTURAL STEEL:
   a) All Structural Steel Shall Be Made From ASTM A–709, Grade 50W (Weathering Steel).
   b) All Connection Bolts, Nuts And Washers Are To Be 7/8" Diameter, High Strength Bolts, ASTM A–325 (Type 3).
   c) All Anchor Bolts Shall Be In Accordance With AASHTO M 314 Grade 55. The Anchor Bolts, Nuts And Washers Shall Be Hot Dip Galvanized In Accordance With ASTM A–123 (For Plate) Or A–153 (For Hardware) Specifications.
   d) Contractor Is Responsable For Providing Proper Cross Bracing, Top Flange Bracing, etc. During All Phases Of Construction. Include The Method Of Bracing In The Shop Drawing Submittal.
4. PIPE PILES:
   a) See Foundation Layout Sheet For Details.

H. WELDING

a) Weld Details And The Welding Operation Shall Be In Accordance With The Current Edition Of The ANSI–AASHTO–AWS Bridge Welding Code. Welds Requiring Nondestructive Testing Shall Be Radiographically Inspected, Except Where The Geometry Of The Region Of The Weld Will Not Permit Satisfactory Information To Be Secured For Verification Of The Weld Quality. When Such Geometrical Conditions Exist, Other Inspection Procedures Or Combination Of Procedures Such As Ultrasonic Inspection, Dye Penetrant Inspection, And/Or Magnetic Particle Inspection May Be Required.

J. PREVENTION OF RUST STAINS FROM WEATHERING STEEL

a) Pier Cap No. 3 And 4 Shall Be Completely Wrapped With A Minimum Of Two Layers Of 6 Mil. Polyethylene Sheeting In Order To Provide A Watertight Seal. Joints In Sheeting Must Be Watertight. The Sheeting Shall Remain In Place, Without Tears Or Other Damage, Until All Construction Is Complete And Accepted. Only Then Shall The Contractor Remove The Sheeting.

K. CONSTRUCTION SEQUENCE

a) Phase Construction Is Required At Lake Bosse Bridge Only. See Construction Sequence Sheet For Details.

L. REMOVAL OF EXISTING BRIDGE

a) See Oranole Road Bridge Existing Bridge Plans.

M. ENVIRONMENT

1. Location – Inland
2. Description
   a) Superstructures: Slightly Aggressive For All Bridges.
   b) Substructure: Extremely Aggressive For All Bridges

N. JACKING LOAD NOTES

a) Jacking Loads Include Dead Load And Live Load Plus Impact. Jacking Equipment Is Not A Part Of This Contract And Does Not Need To Be Provided By The Bridge Contractor.
b) Jacks Shall Be Equipped With Locking Rings Which Will Prevent Movement In The Event Hydraulic Pressure Is Lost. Jacks Shall Be Locked Off Prior To Removal Of Any Bearing Assemblies.
c) Jacking Shall Continue Until Pads Can Be Freed, But the Amount Of Lift Shall Not Exceed 1/4 Inches.
d) Properly Sized Shim Plates Shall Be Provided To Limit The Ultimate Load Bearing Stressed On Concrete In Accordance With Article 8.16.7 Of AASHTO Standard Specifications.

O. DATUM

a) All Elevations Refer To NGVD 1929 Datum.

P. UTILITIES

a) Existing Utilities Shown At Approximate Locations. Exact Locations Shall Be Determined By The Contractor Prior To The Start Of Construction.
b) Contractor Shall Reference Utility Adjustment Plans In Roadway Set For Utility Relocation. Utility Relocations In Bridge Vicinity Not Shown In Bridge Plans.
c) Proposed Storm Sewer Utilities On Bridge:

Location:	Utility:
Little Wekiva River – Under Right Overhang	36"øD.I.P.
Lake Bosse – Under Left Overhang	30"øD.I.P.

   See Miscellaneous Detail Sheets.

Q. BRIDGE FLOOR GROOVING

All Roadway Riding Surfaces Of The Bridge Deck Slabs Shall Be Grooved In Accordance With The Requirements Of Class 4 Floor Finish In FDOT General Specification (Section 400–15.2.5)

R. STAY–IN–PLACE FORMS

All Embedded Items And Accessories Required For Stay–In–Place Forms Shall Be Included In The Shop Drawing Submittal.

S. SURFACE FINISH

The Top And Both Faces Of Traffic Railing (Barrier) And End Post, The Top And Both Faces Of The Sidewalk Parapet, And The Exterior Vertical Face Of The Bridge Deck Shall Recieve A "Class V Applied Finish Coating" In Accordance With The Specifications. See The "Surface Finish Details" On This Sheet.

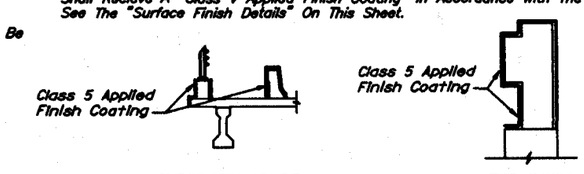

SUPERSTRUCTURE END POST

SURFACE FINISH DETAILS

BID ITEMS NOTES

1) Payment For Incidental Items Not Specifically Covered In The Individual Bid Items Shall Be Included In The Contract Prices For The Bid Items.
2) The Following Numbers Of Standard And Non–Standard Composite Neoprene Bearing Pads (Pay Item No. 400–147) Are Required:
   Little Wekiva River – 22 Type IV Composite Pads For A Total Volume Of 3.7 C.F.
   Lake Bosse – 110 Type V Composite Pads For A Total Volume Of 30.6 C.F.
   22 Non–Standard Composite Pads For A Total Volume Of 13.8 C.F.
   Neoporene Bearing Pads Shall Be Furnished And Installed By The Contractor.
3) Bid Item No. 400–7 Bridge Floor Grooving Shall Not Include Approach Slab Grooving. (See Roadway Plans) The Area Of Bridge Floor Grooving Shall Be Determined By Measurement Of Area Bounded By The Gutter Lines And The Beginning And End Of The Bridge Deck Slab.
4) The Total Plan Area Of Approach Slabs Required:
   Little Wekiva River – ____
   Lake Bosse – ____
   See Miscellaneous Bridge Details Sheet For Details. Additional Details Of Approach Slabs And Payment Are Included In The Roadway Plans.
5) The Removal Of The Existing Oranole Road Bridge Over The Little Wekiva River Shall Be Paid For Under Pay Item 110–3 Removal Of Existing Structures.

REVISIONS

Date	By	Description	Date	By	Description

	Names	Dates
Drawn by	JLA	9/94
Checked by	MKA	9/94
Designed by	MKA	9/94
Checked by	PM	9/94
Approved by	Peeter Mannik, P.E.	

ENGINEER OF RECORD: DYER, RIDDLE, MILLS AND PRECOURT, INC. 1505 EAST COLONIAL DRIVE ORLANDO, FLORIDA 32803

LOGO: DYER, RIDDLE, MILLS AND PRECOURT, INC. ENGINEERS - SURVEYORS 1505 EAST COLONIAL DRIVE ORLANDO, FLORIDA 32803

SEAL:

FLORIDA DEPARTMENT OF TRANSPORTATION
STRUCTURES DESIGN OFFICE

ROAD NO.	COUNTY	PROJECT NO.
SR414	SEMINOLE	77002–3503

SHEET TITLE: GENERAL NOTES

Drawing No.

PROJECT NAME: MAITLAND BOULEVARD

Index No.

FED. ROAD DIV. NO.	STATE	PROJECT NO.	FISCAL YEAR	SHEET NO.
3	FLA.		98	B-1

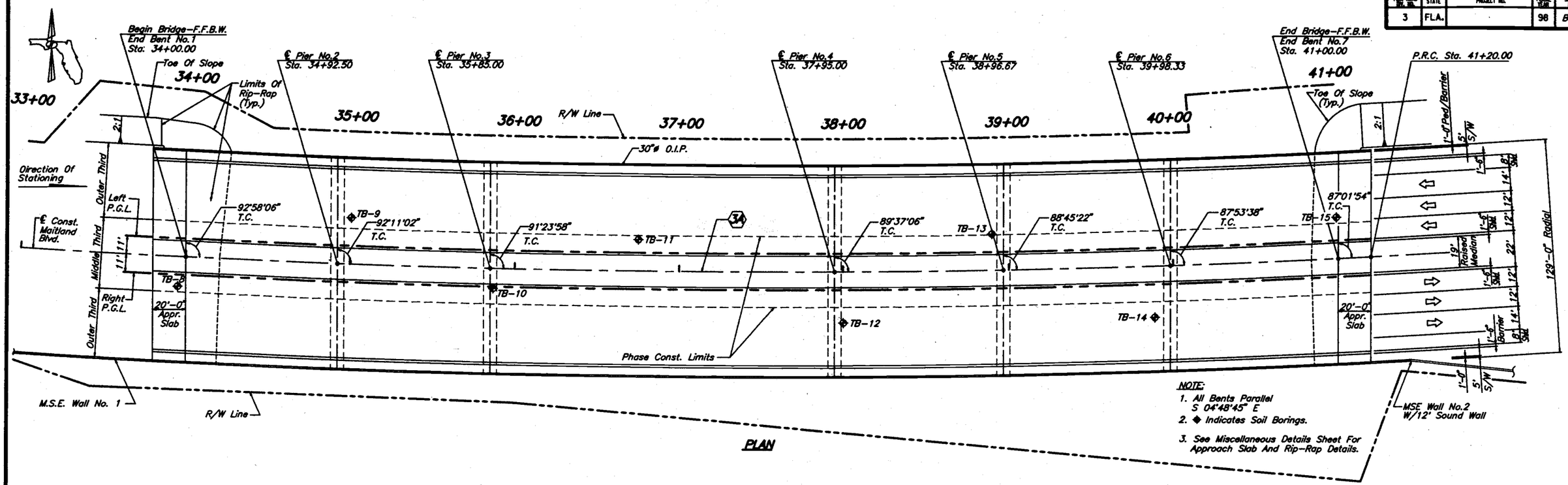

PLAN

NOTE:
1. All Bents Parallel S 04°48'45" E
2. ◆ Indicates Soil Borings.
3. See Miscellaneous Details Sheet For Approach Slab And Rip-Rap Details.

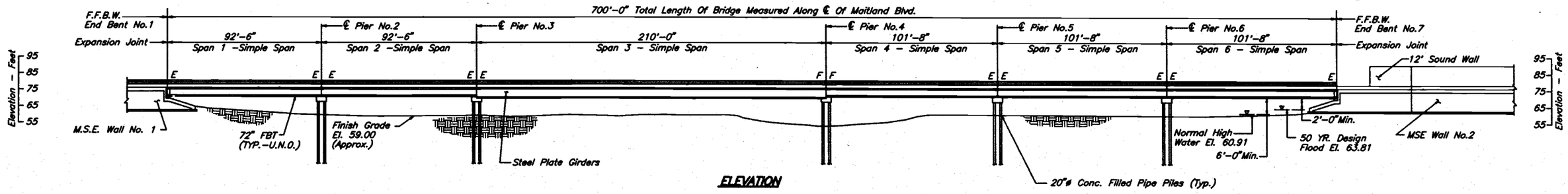

ELEVATION

CURVE DATA (3A)

Δ = 07°43'27" Lt.
D = 00°50'53"
T = 456.077'
L = 910.773'
R = 6755.800'
e = Normal/Crown
P.C. Sta. = 32+08.39 (Back)
32+09.23 (Ahead)
P.I. Sta. = 36+65.30
P.R.C. Sta. = 41+20.00

TRAFFIC DATA MAITLAND BLVD.

Est. 1998 2-Way ADT 34,818 EST
Est. 2008 2-Way ADT 37,952 EST
K = 9.0%
D = 55%
T = 5% (24 HR)
Design Speed = 45 MPH

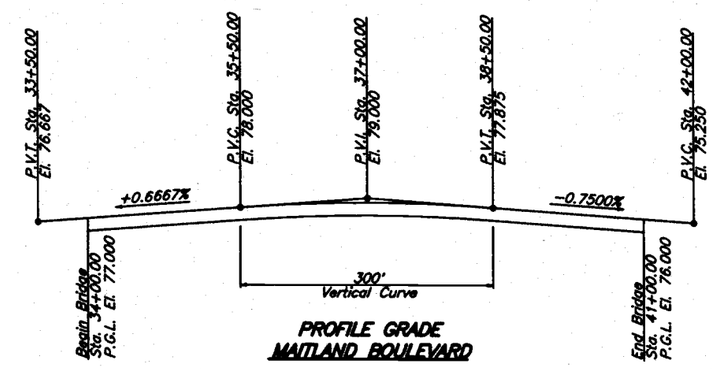

PROFILE GRADE MAITLAND BOULEVARD

REVISIONS

Date	By	Description	Date	By	Description

	Names	Dates
Drawn by	JLA	7/94
Checked by	MKA	7/94
Designed by	MKA	7/94
Checked by	PM	7/94
Approved by	Peeter Mannik, P.E.	

ENGINEER OF RECORD:
DYER, RIDDLE, MILLS AND PRECOURT, INC.
1505 EAST COLONIAL DRIVE
ORLANDO, FLORIDA 32803

LOGO:
DYER, RIDDLE, MILLS AND PRECOURT, INC.
ENGINEERS - SURVEYORS
1505 EAST COLONIAL DRIVE
ORLANDO, FLORIDA 32803

SEAL:

FLORIDA DEPARTMENT OF TRANSPORTATION
STRUCTURES DESIGN OFFICE

ROAD NO.	COUNTY	PROJECT NO.
SR414	SEMINOLE	77002-3503

SHEET TITLE: GENERAL PLAN AND ELEVATION

PROJECT NAME: MAITLAND BOULEVARD OVER LAKE BOSSE BRIDGE NO. 77002-3503

Drawing No.

Index No.

FED. ROAD DIST. NO.	STATE	PROJECT NO.	TOTAL SHEETS	SHEET NO.
3	FLA.		98	B-36

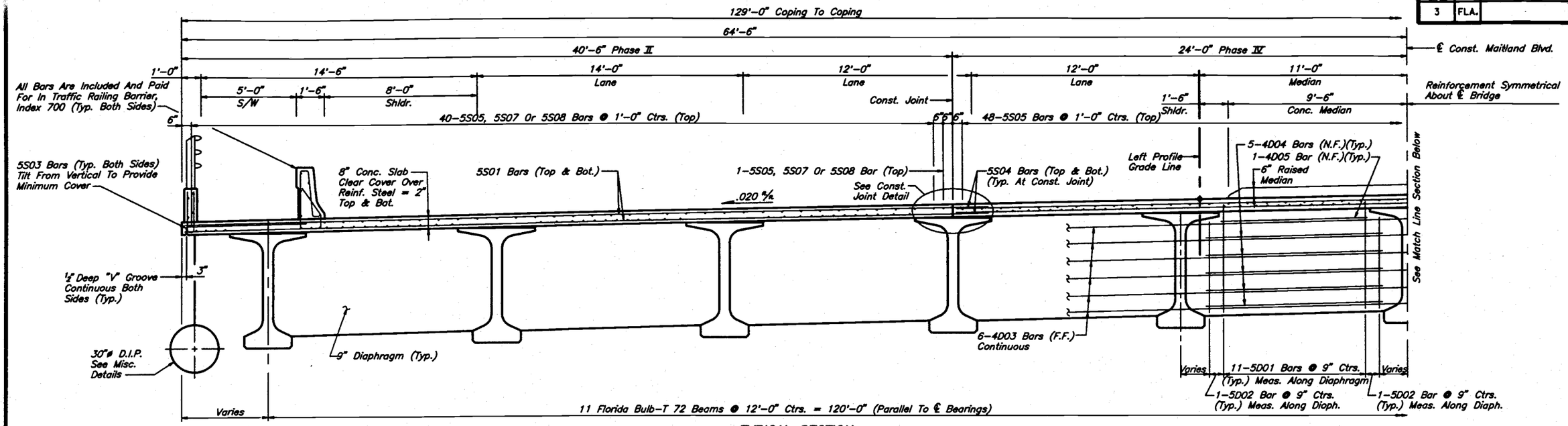

TYPICAL SECTION

NOTES:
1. All Dimensions Are Measured Radially Unless Noted Otherwise.
2. See Superstructure Details Sheet For Superstructure Notes And Details.

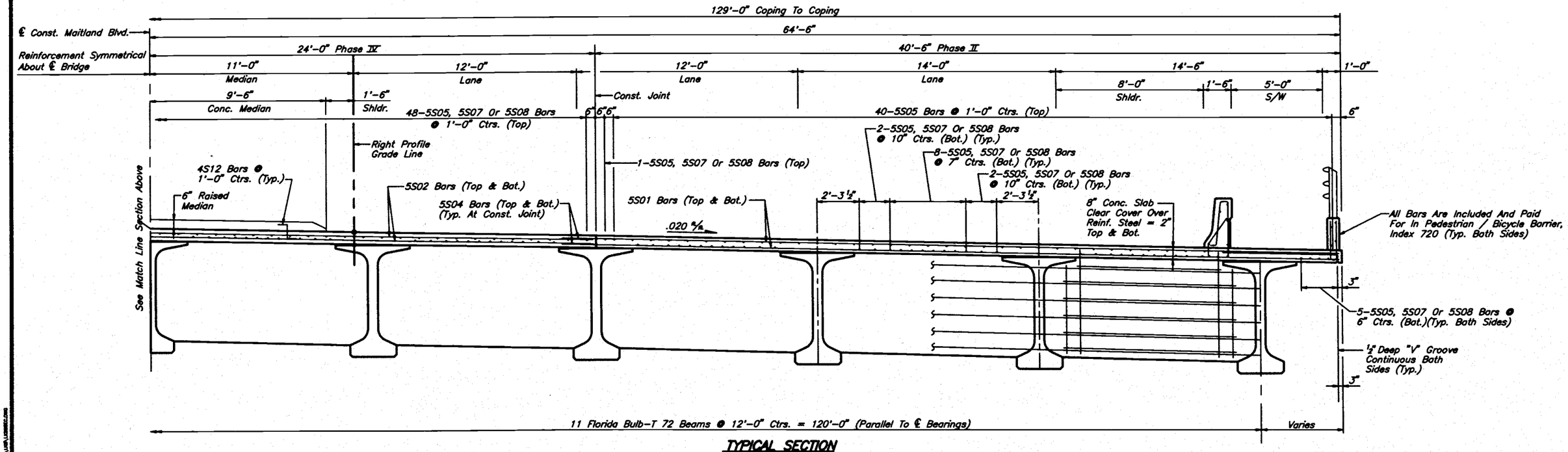

TYPICAL SECTION

SPANS 1, 2, 4, 5 AND 6

REVISIONS					
Date	By	Description	Date	By	Description

	Names	Dates
Drawn by	JJS	9/94
Checked by	MKA	9/94
Designed by	MKA	9/94
Checked by	PM	9/94
Approved by	Peeter Mannik, P.E.	

ENGINEER OF RECORD:
DYER, RIDDLE, MILLS AND PRECOURT, INC.
1505 EAST COLONIAL DRIVE
ORLANDO, FLORIDA 32803

LOGO: DYER, RIDDLE, MILLS AND PRECOURT, INC.

SEAL:

FLORIDA DEPARTMENT O

ROAD NO.	COUNTY	PROJECT NO.
SR414	SEMINOLE	77002-3503

SHEET TITLE: SUPERSTRUCTURE SECTION

PROJECT NAME: MAITLAND BOULEVARD OVER LAKE BOSSE

Drawing No.

Index No.

FED. ROAD DIV. NO.	STATE	PROJECT NO.	FISCAL YEAR	SHEET NO.
3	FLA.		98	B-29

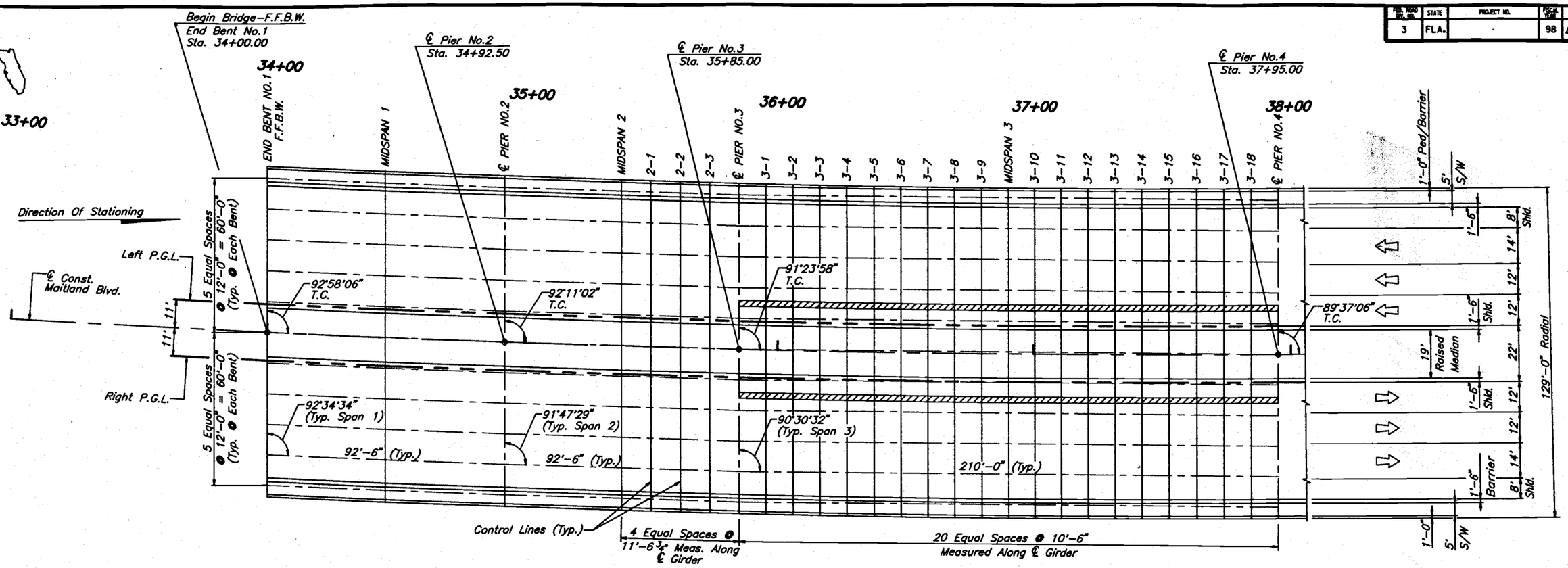

FRAMING PLAN & ROADWAY SURFACE ELEVATION GRID

NOTES:
1. ▽▽▽▽ Indicates 2'-4" Pour Cap.
2. Control Lines Are Parallel With Bents (S04°48'95"E).
3. For Deck Elevations See Finish Grade Elevations Sheet 3 of 3.

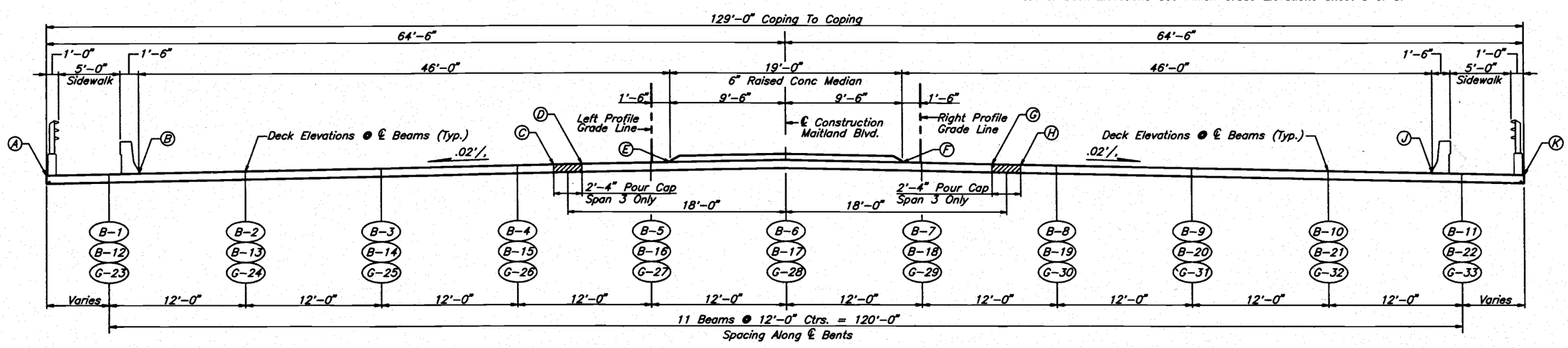

TYPICAL SECTION
Looking Up Station

REVISIONS

Date	By	Description	Date	By	Description

	Names	Dates
Drawn by	JLA	6/95
Checked by	MKA	6/95
Designed by	MKA	6/95
Checked by	PM	6/95
Approved by	Peeter Mannik, P.E.	

ENGINEER OF RECORD:
DYER, RIDDLE, MILLS AND PRECOURT, INC.
1505 EAST COLONIAL DRIVE
ORLANDO, FLORIDA 32803

LOGO:
DYER, RIDDLE, MILLS AND PRECOURT, INC.
ENGINEERS - SURVEYORS
1505 EAST COLONIAL DRIVE
ORLANDO, FLORIDA 32803

SEAL:

FLORIDA DEPARTMENT OF TRANSPORTATION
STRUCTURES DESIGN OFFICE

ROAD NO.	COUNTY	PROJECT NO.
SR414	SEMINOLE	77002-3503

SHEET TITLE: FINISH GRADE ELEVATIONS

PROJECT NAME: MAITLAND BOULEVARD OVER LAKE BOSSE

Drawing No. 1 of 3

Index No.

JOB 97/06/98 3:00PM C:\JOB\JLAPRECT.DGN

FED. ROAD DIST. NO.	STATE	PROJECT NO.	TOTAL SHEETS	SHEET NO.
3	FLA.		98	B-30

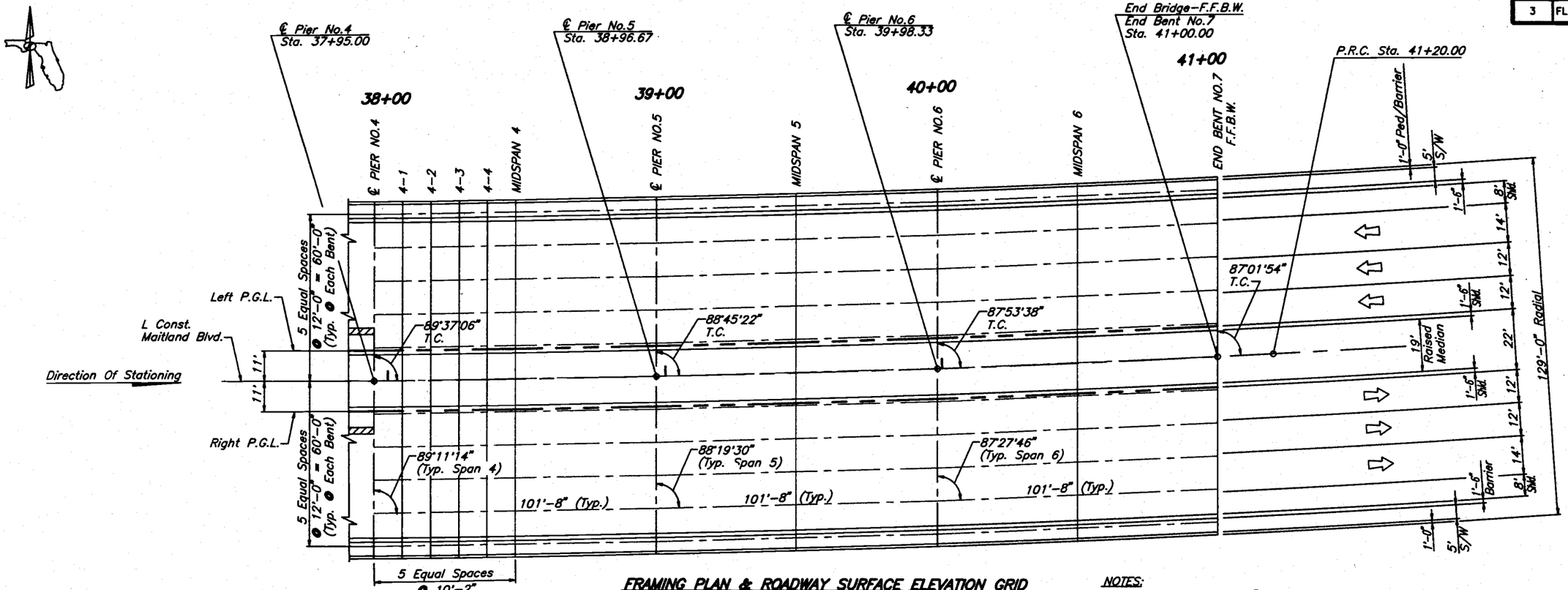

FRAMING PLAN & ROADWAY SURFACE ELEVATION GRID

NOTES:
1. ▨ Indicates 2'-4" Pour Cap.
2. Control Lines Are Parallel With Bents (S04°48'95"E).
3. For Deck Elevations See Finish Grade Elevations Sheet 3 of 3.

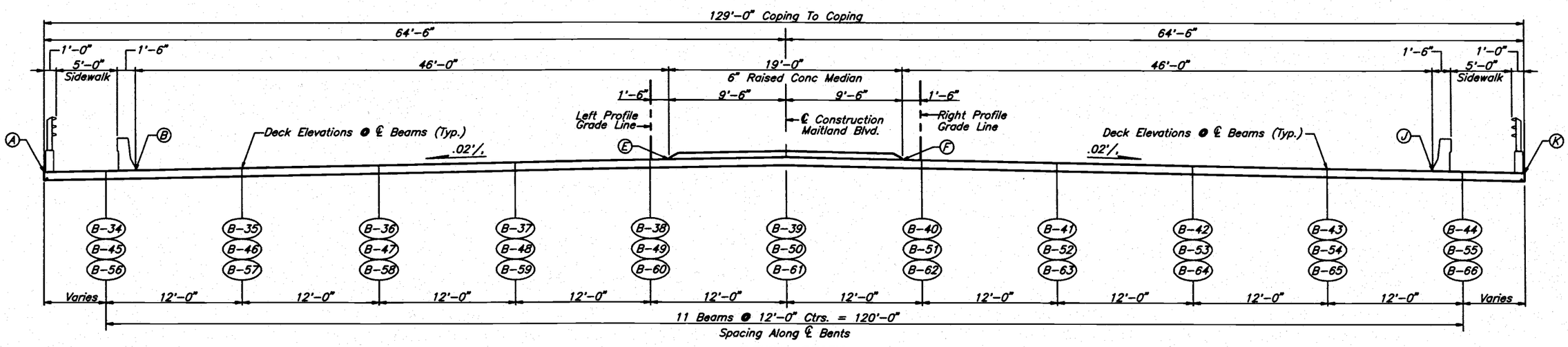

TYPICAL SECTION
Looking Up Station

REVISIONS					
Date	By	Description	Date	By	Description

	Names	Dates
Drawn by	JLA	6/95
Checked by	MKA	6/95
Designed by	MKA	6/95
Checked by	PM	6/95
Approved by	Peeter Mannik, P.E.	

ENGINEER OF RECORD:
DYER, RIDDLE, MILLS AND PRECOURT, INC.
1505 EAST COLONIAL DRIVE
ORLANDO, FLORIDA 32803

LOGO:
DYER, RIDDLE, MILLS AND PRECOURT, INC.
ENGINEERS - SURVEYORS
1505 EAST COLONIAL DRIVE
ORLANDO, FLORIDA 32803

SEAL:

FLORIDA DEPARTMENT OF TRANSPORTATION
STRUCTURES DESIGN OFFICE

ROAD NO.	COUNTY	PROJECT NO.
SR414	SEMINOLE	77002-3503

SHEET TITLE: FINISH GRADE ELEVATIONS

PROJECT NAME: MAITLAND BOULEVARD OVER LAKE BOSSE

Drawing No. 2 of 3

Index No.

FED. ROAD DIV. NO.	STATE	PROJECT NO.	FISCAL YEAR	SHEET NO.
3	FLA.		98	B-37

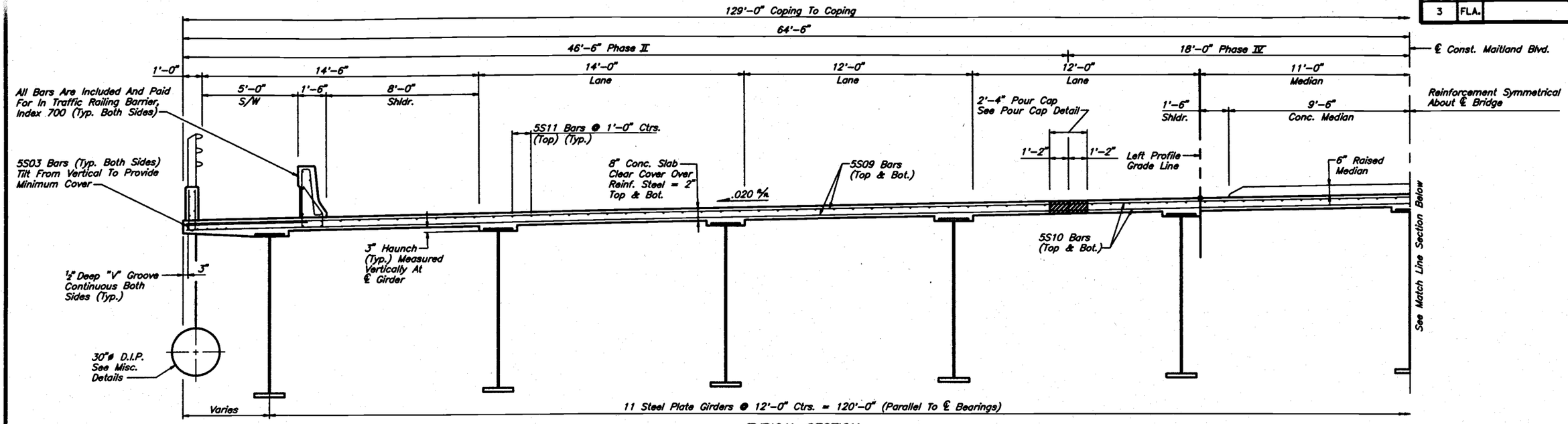

TYPICAL SECTION

NOTES:
1. All Dimensions Are Measured Radially Unless Noted Otherwise.
2. See Superstructure Details Sheet For Superstructure Notes And Details.
3. For Reinforcing Steel At Haunches, See Superstructure Details Sheet.

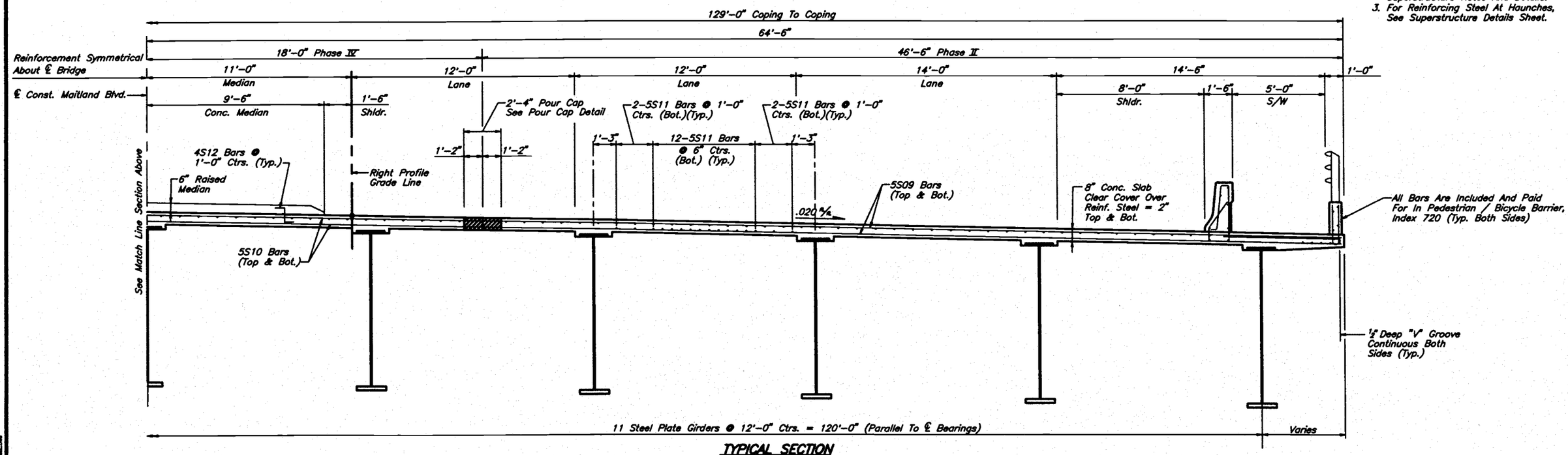

TYPICAL SECTION

SPAN NO. 3

REVISIONS					
Date	By	Description	Date	By	Description

	Names	Dates
Drawn by	JJS	9/94
Checked by	MKA	9/94
Designed by	MKA	9/94
Checked by	PM	9/94
Approved by	Peeter Mannik, P.E.	

ENGINEER OF RECORD:
DYER, RIDDLE, MILLS AND PRECOURT, INC.
1505 EAST COLONIAL DRIVE
ORLANDO, FLORIDA 32803

LOGO:
DYER, RIDDLE, MILLS AND PRECOURT, INC.
ENGINEERS - SURVEYORS
1505 EAST COLONIAL DRIVE
ORLANDO, FLORIDA 32803

SEAL:

FLORIDA DEPARTMENT OF TRANSPORTATION
STRUCTURES DESIGN OFFICE

ROAD NO.	COUNTY	PROJECT NO.
SR414	SEMINOLE	77002-3503

SHEET TITLE: SUPERSTRUCTURE SECTION

PROJECT NAME: MAITLAND BOULEVARD OVER LAKE BOSSE

Drawing No.

Index No.

JOB 07/21/98 11:18AM C:\JJS\JJSRSEC.DGN

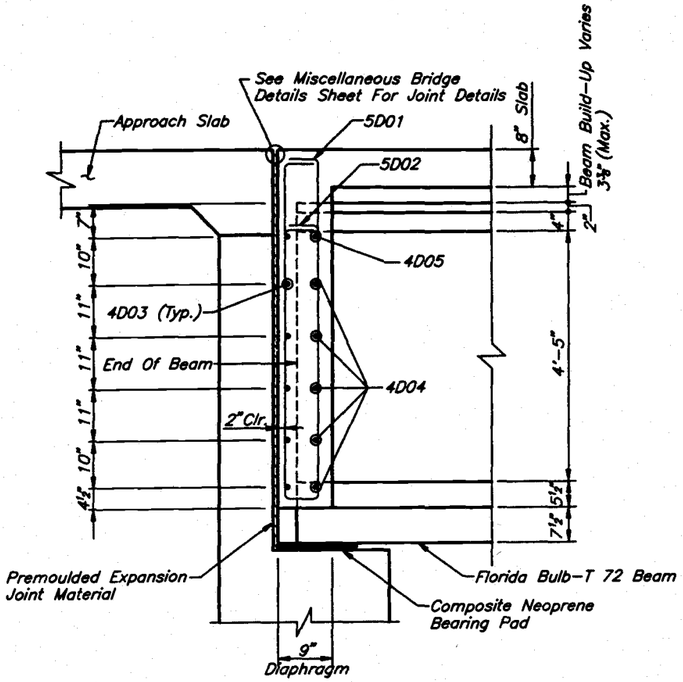

DIAPHRAGM SECTION AT END BENTS
(Concrete Beam Spans Only)

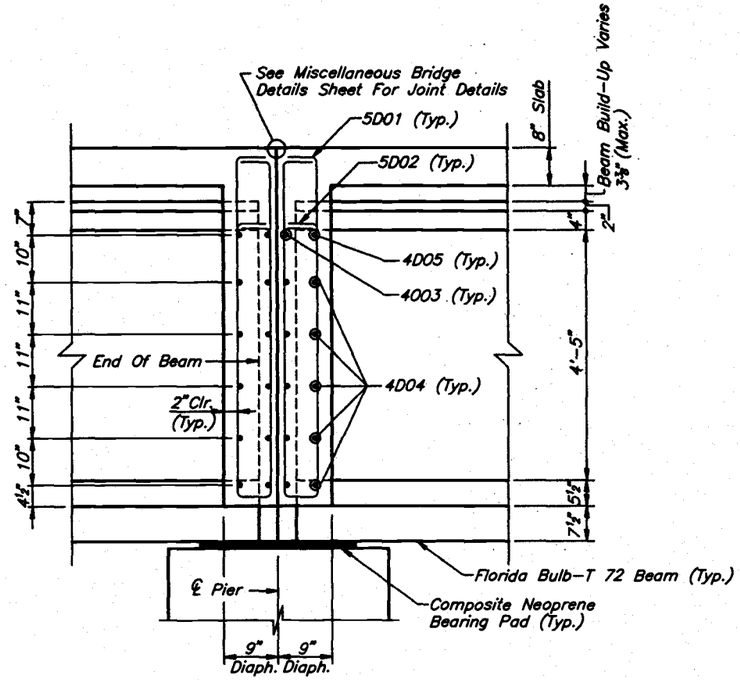

DIAPHRAGM SECTION AT PIERS
(Concrete Beam Spans Only)

NOTES

1. The Build-Up Dimensions Are Computed Assuming A Time To Release Of 24 Hours.
2. The Length Correction Dimension And The Build-Up Dimensions Assume A Period Of No More Than 120 Days Between The Casting Of The Beam And The Casting Of The Deck. These Values Are Also Calculated Assuming Transfer Of Prestress At The Indicated Release Concrete Strength (f'ci). Contractor Shall Submit Calculations Revising These Values To The Engineer For Approval Should The Contractor's Proposed Schedule Between Casting Of The Beam And Casting Of The Deck Adversely Affect These Time Dependent Values.
3. Dead Load Deflection During Pour Is The Anticipated Deflection Of Beam Due To Casting Of The Concrete Deck. Build-Up At Ends And Build-up At Midspan (See Detail This Sheet) Refer To The Build-Up At The Ends And Midspan Of The Beam Necessary To Achieve True Grade At The Top Of The Deck After Casting Of The Deck.
4. Slab Shall Be Screeded To Grade With No Allowance For Permanent Camber. For This Project Slabs Shall Be Screeded Longitudinally Between Bents Unless Otherwise Directed In Writing By The Engineer.
5. No Unit Shall Be Placed Adjacent To A Previously Placed Unit That Is Not A Minimum Of 72 Hours Old.
6. After Placement Of The First Unit, Succeeding Placements Shall Begin At The End Away From And Proceed Toward The Previously Placed Unit.
7. The Cost Of All Labor And Materials Required For Construction Of Deck Joint Shall Be Paid For In Bid Item No. 400-2-4 Class II Concrete (Superstructure).
8. All Or Part Of The Raised Median In Span 3 May Be Poured Prior To The Pour Caps In Order To Lower The Camber Of The Middle Section As Necessary.
9. The Pour Caps In Span 3 Must Be Complete Before Placement Of The Traffic Barriers And 30" D.I.P., And Before Completion Of The Raised Median (See Note 8).

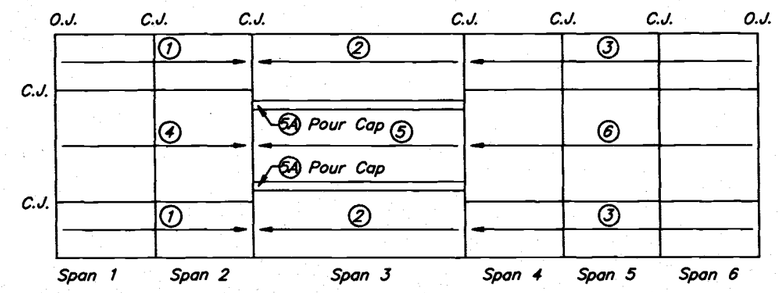

DECK POUR SEQUENCE
O.J. : Open Joint
C.J. : Construction Joint

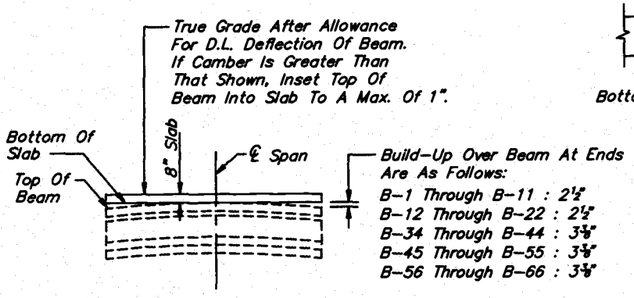

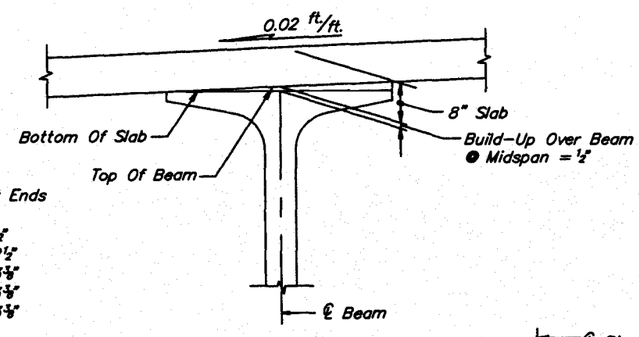

BUILD-UP OVER FLORIDA BULB-T BEAM

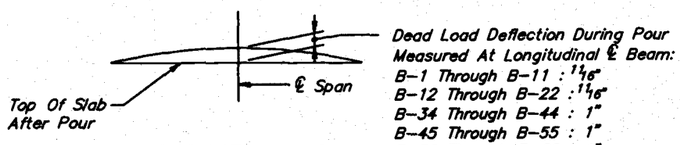

DEFLECTION DIAGRAM FOR FLORIDA BULB-T

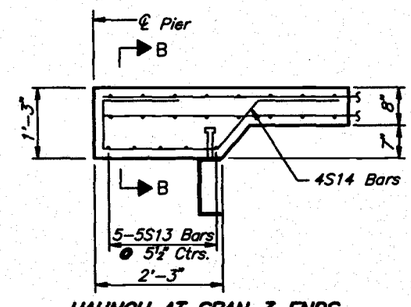

HAUNCH AT SPAN 3 ENDS

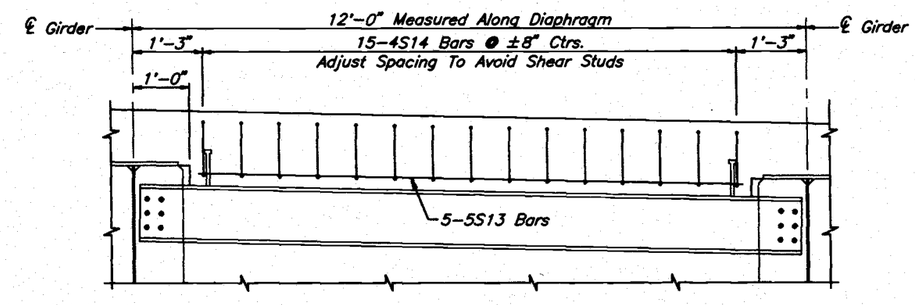

SECTION B-B

REVISIONS						
Date	By	Description	Date	By	Description	

	Names	Dates
Drawn by	JLA	7/94
Checked by	MKA	7/94
Designed by	MKA	7/94
Checked by	PM	7/94
Approved by	Peeter Mannik, P.E.	

ENGINEER OF RECORD: DYER, RIDDLE, MILLS AND PRECOURT, INC.
1505 EAST COLONIAL DRIVE
ORLANDO, FLORIDA 32803

LOGO: DYER, RIDDLE, MILLS AND PRECOURT, INC.
ENGINEERS - SURVEYORS
1505 EAST COLONIAL DRIVE
ORLANDO, FLORIDA 32803

SEAL:

FLORIDA DEPARTMENT OF TRANSPORTATION
STRUCTURES DESIGN OFFICE

ROAD NO.	COUNTY	PROJECT NO.
SR414	SEMINOLE	77002-3503

SHEET TITLE: SUPERSTRUCTURE DETAILS

PROJECT NAME: MAITLAND BOULEVARD OVER LAKE BOSSE

Drawing No.

Index No.

FED. ROAD DIV. NO.	STATE	PROJECT NO.	FISCAL YEAR	SHEET NO.
3	FLA.		98	B-39

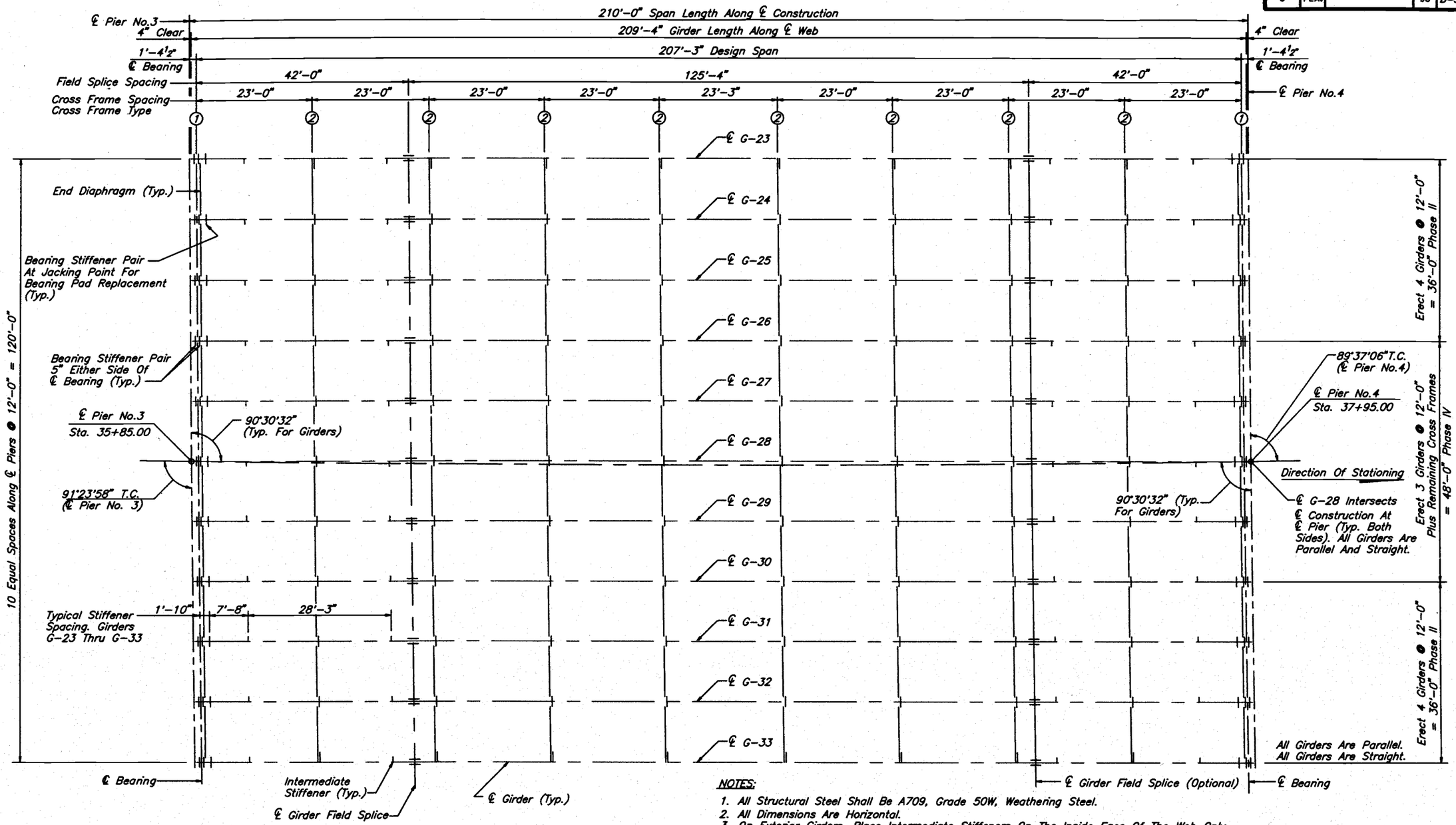

NOTES:

1. All Structural Steel Shall Be A709, Grade 50W, Weathering Steel.
2. All Dimensions Are Horizontal.
3. On Exterior Girders, Place Intermediate Stiffeners On The Inside Face Of The Web Only.
4. Ends Of Girders, Stiffener Plates, Bearing Stiffeners And Connection Plates Shall Be Vertical Upon Completion Of Construction.
5. All Cross Frames Shall Be Parallel To The ℄ Piers.
6. For Steel Girder Details, See Sheets B-40 Thru B-43.
7. For Additional Steel Girder Notes, See Sheet A-2.
8. For Field Splice Details, See Sheet B-42.
9. All Welding Design, Fabrication & Inspection Shall Be In Accordance With The Current AASHTO/AWS Bridge Welding Code.
10. Charpy V-Notch Impact Test Are Required For All Web Plates And Bottom Flange Plates Of The Girders.

REVISIONS

Date	By	Description	Date	By	Description

	Names	Dates
Drawn by	JJS	4/95
Checked by	MN	4/95
Designed by	MN	4/95
Checked by	PM	4/95
Approved by	Peeter Mannik, P.E.	

ENGINEER OF RECORD:
DYER, RIDDLE, MILLS AND PRECOURT, INC.
1505 EAST COLONIAL DRIVE
ORLANDO, FLORIDA 32803

LOGO:
DYER, RIDDLE, MILLS AND PRECOURT, INC.
ENGINEERS - SURVEYORS
1505 EAST COLONIAL DRIVE
ORLANDO, FLORIDA 32803

SEAL:

FLORIDA DEPARTMENT OF TRANSPORTATION
STRUCTURES DESIGN OFFICE

ROAD NO.	COUNTY	PROJECT NO.
SR414	SEMINOLE	F/002-3503

SHEET TITLE: FRAMING PLAN - SPAN 3

PROJECT NAME: MAITLAND BOULEVARD OVER LAKE BOSSE

Drawing No.

Index No.

FED. ROAD DIV. NO.	STATE	PROJECT NO.	TOTAL SHEETS	SHEET NO.
3	FLA.		98	B-40

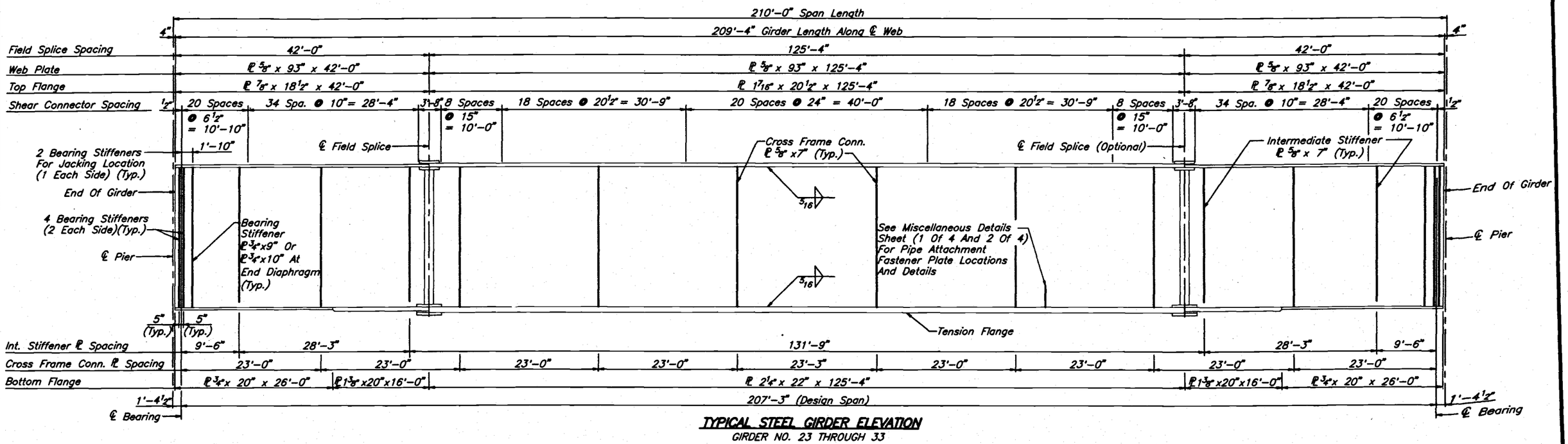

TYPICAL STEEL GIRDER ELEVATION

GIRDER NO. 23 THROUGH 33

Notes: 1. All Intermediate Stiffener Plates Are One Sided. All Cross Frame Connection Plates Are Two Sided Except At Exterior Beams. See The "FRAMING PLAN" For Locations.

2. The Web And The Bottom Flange Are Tension Members, And Shall Meet Zone 1 Of The Charpy V-Notch Toughness Requirements.

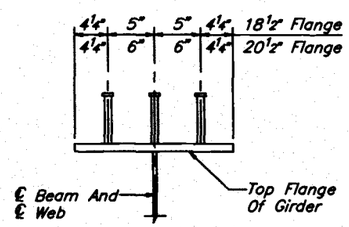

SECTION THRU GIRDER

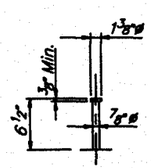

Typical Welded Stud (3 Per Row)

SHEAR CONNECTOR DETAILS

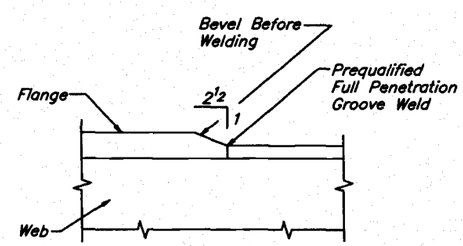

FLANGE THICKNESS TRANSITION

(Typ.- Except At Field Splice Locations)

REVISIONS					
Date	By	Description	Date	By	Description

	Names	Dates
Drawn by	JLA	9/94
Checked by	MN	9/94
Designed by	MN	9/94
Checked by	PM	9/94
Approved by	Peeter Mannik, P.E.	

ENGINEER OF RECORD: DYER, RIDDLE, MILLS AND PRECOURT, INC. 1505 EAST COLONIAL DRIVE ORLANDO, FLORIDA 32803

LOGO: DYER, RIDDLE, MILLS AND PRECOURT, INC. ENGINEERS - SURVEYORS 1505 EAST COLONIAL DRIVE ORLANDO, FLORIDA 32803

SEAL:

FLORIDA DEPARTMENT OF TRANSPORTATION
STRUCTURES DESIGN OFFICE

ROAD NO.	COUNTY	PROJECT NO.
SR414	SEMINOLE	77002-3503

SHEET TITLE: GIRDER ELEVATION

PROJECT NAME: MAITLAND BOULEVARD OVER LAKE BOSSE

Drawing No.

Index No.

JOB 07/21/98 11:18AM C:\USR\JLA\GIRDER1.DGN

FED. ROAD DIV. NO.	STATE	PROJECT NO.	FISCAL YEAR	SHEET NO.
3	FLA.		98	B-41

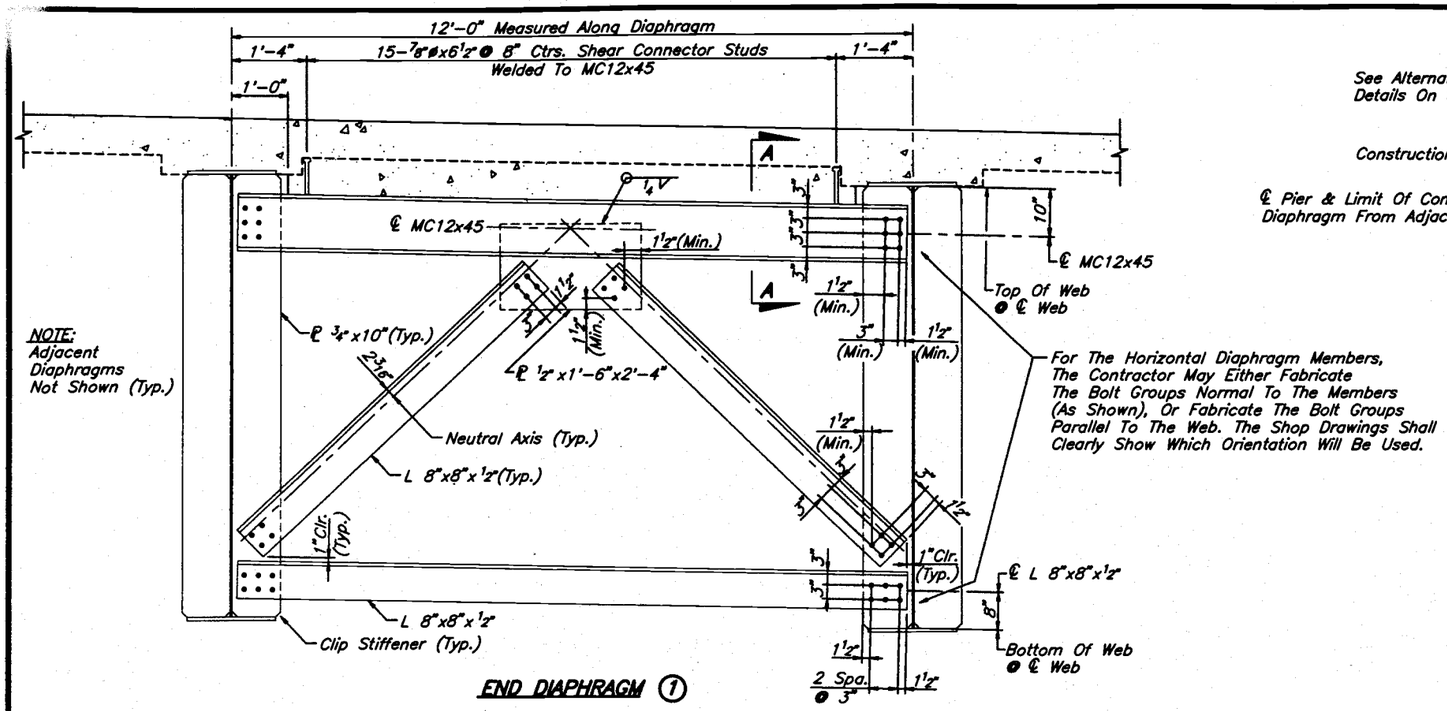

NOTE:
Adjacent Diaphragms Not Shown (Typ.)

For The Horizontal Diaphragm Members, The Contractor May Either Fabricate The Bolt Groups Normal To The Members (As Shown), Or Fabricate The Bolt Groups Parallel To The Web. The Shop Drawings Shall Clearly Show Which Orientation Will Be Used.

END DIAPHRAGM (1)

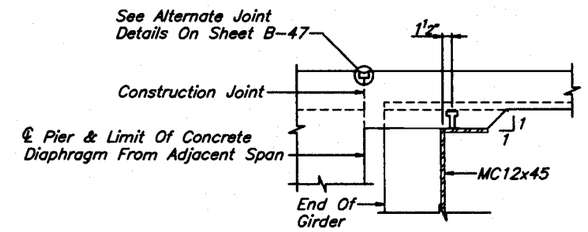

SECTION A-A

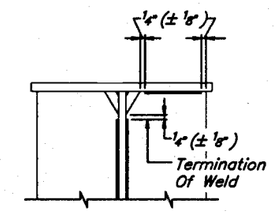

STIFFENER WELD TERMINATION DETAIL

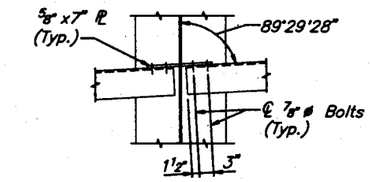

SECTION B-B

DIAPHRAGM AND CROSS FRAME NOTES:

1. Bolt Holes In Diaphragm And Cross Bracing Members Shall Be Oversized Holes (3/16" Larger Than The Bolt Diameter), Bolt Holes In The Connecting Stiffeners Shall Be Standard Holes.
2. All Bolts Shall Be 7/8"ø H.S. Bolts (Friction Type) Conforming To ASTM A325 (Type 3).
3. Diaphragms And Cross Bracing Located In The Beam Space Between Phases (Under The Pour Cap) Shall Not Be Installed Until The Pour Cap Is Complete.

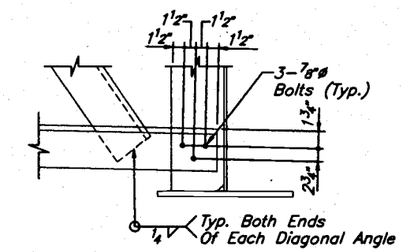

DETAIL "A"

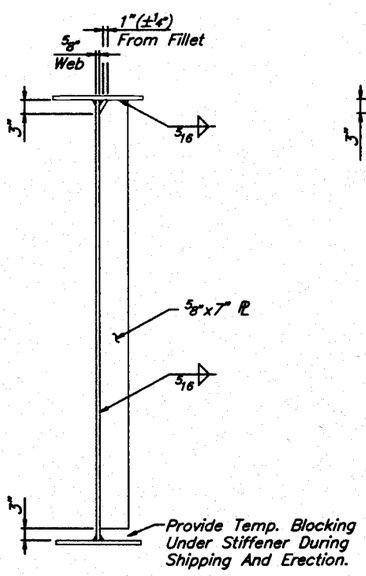

TRANSVERSE STIFFENER

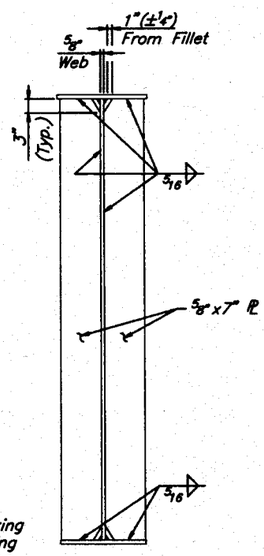

CROSS FRAME CONNECTION

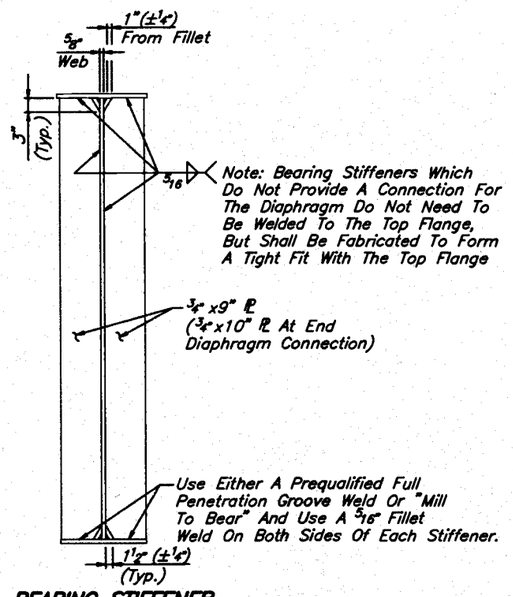

BEARING STIFFENER

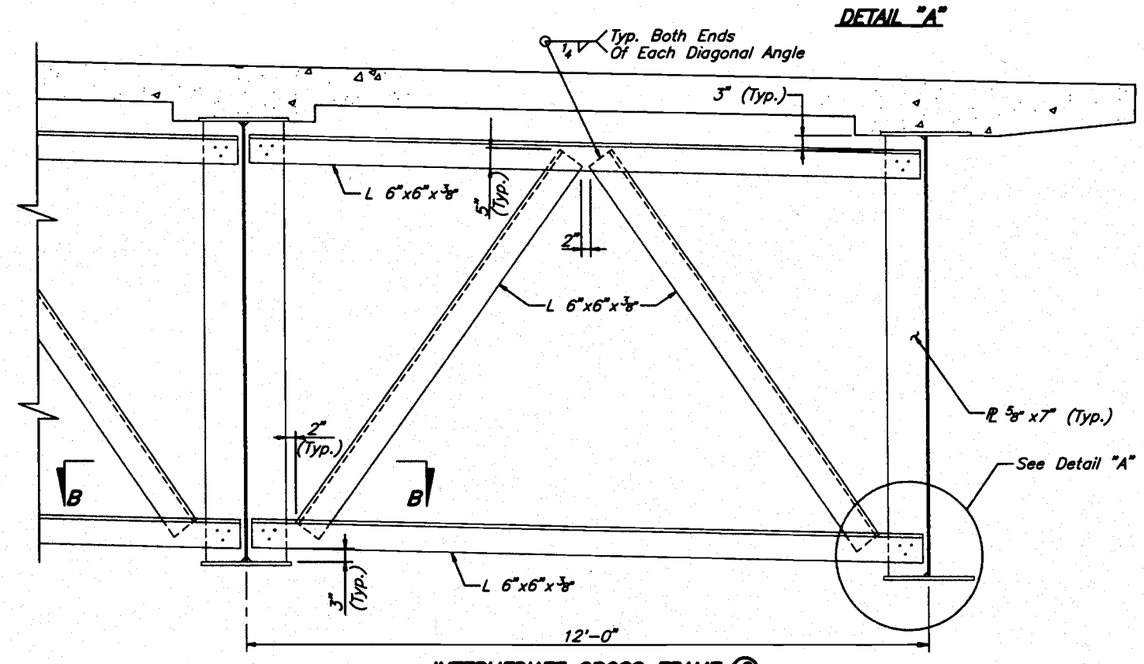

INTERMEDIATE CROSS FRAME (2)

REVISIONS					
Date	By	Description	Date	By	Description

	Names	Dates
Drawn by	JLA	5/94
Checked by	MN	5/94
Designed by	MN	5/94
Checked by	PM	5/94
Approved by	Peeter Mannik, P.E.	

ENGINEER OF RECORD:
DYER, RIDDLE, MILLS AND PRECOURT, INC.
1505 EAST COLONIAL DRIVE
ORLANDO, FLORIDA 32803

LOGO:
DYER, RIDDLE, MILLS AND PRECOURT, INC.
ENGINEERS - SURVEYORS
1505 EAST COLONIAL DRIVE
ORLANDO, FLORIDA 32803

SEAL:

FLORIDA DEPARTMENT OF TRANSPORTATION
STRUCTURES DESIGN OFFICE

ROAD NO.	COUNTY	PROJECT NO.
SR 414	SEMINOLE	77002-3503

SHEET TITLE: GIRDER DETAILS

PROJECT NAME: MAITLAND BOULEVARD OVER LAKE BOSSE

Drawing No. 1 OF 2

Index No.

J.L. 07/21/98 07:37AM C:\MRL\MRL\LAR\LABBRIDT.DWG

FED. ROAD DIV. NO.	STATE	PROJECT NO.	FISCAL YEAR	SHEET NO.
3	FLA.		98	B-42

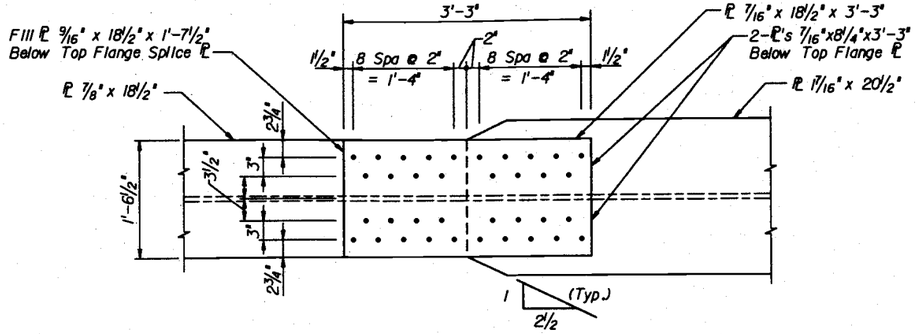

TOP FLANGE SPLICE

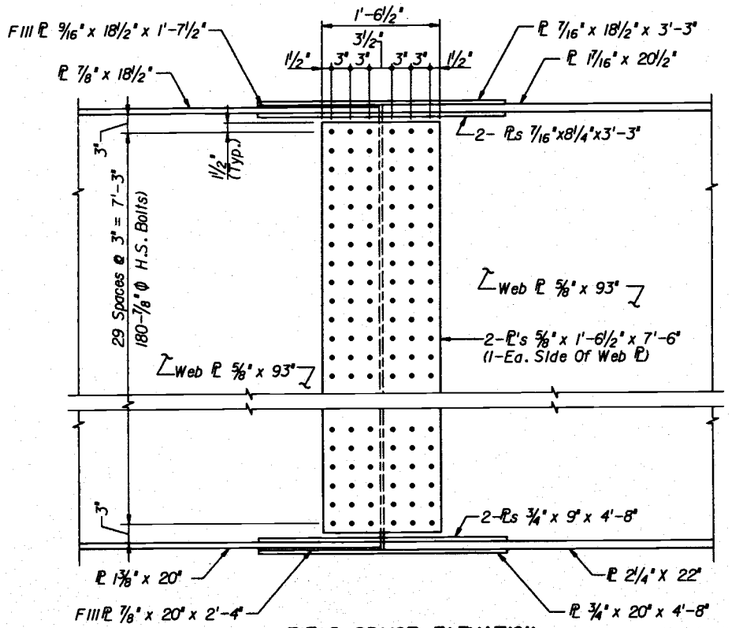

FIELD SPLICE ELEVATION

FIELD SPLICE NOTES:

1. All Splice Plates Shall Be In Accordance With A.S.T.M. Specification A-709 Steel (Grade 50W).
2. Charpy V-Notch Impact Properties Required For All Splice Plates. Impact Properties Shall Be In Accordance With Temperture Zone Designation 1.
3. All Parts Of Each Splice Shall Be Completely Shop Assembled Taking Into Account Their Relative Position In The Finished Structure Due To Grade, Camber, And Curvature Including Their Location Relative To The Shear Connectors. Sections Shall Be Matchmarked While So Assembled. General Reaming Of Holes For Each Field Splice Will Be Required While All Parts Are Completely Shop Assembled In The Correct Position.
4. All Bolts Shall Be 7/8"Ø High Strength Bolts (Friction Type). High Strength Bolts Shall Conform To The Requirements Of The ASTM A-325, Type 3. Girder Field Splices Shall Be Bolted Friction Type Connections Using Standard Size Holes (1/16" Larger Than Bolt Diameter). Bolts And Washers Shall Be Sized Such That The Threads Are Excluded From The Shear Planes A Distance Equal To Two Pitch Increments.

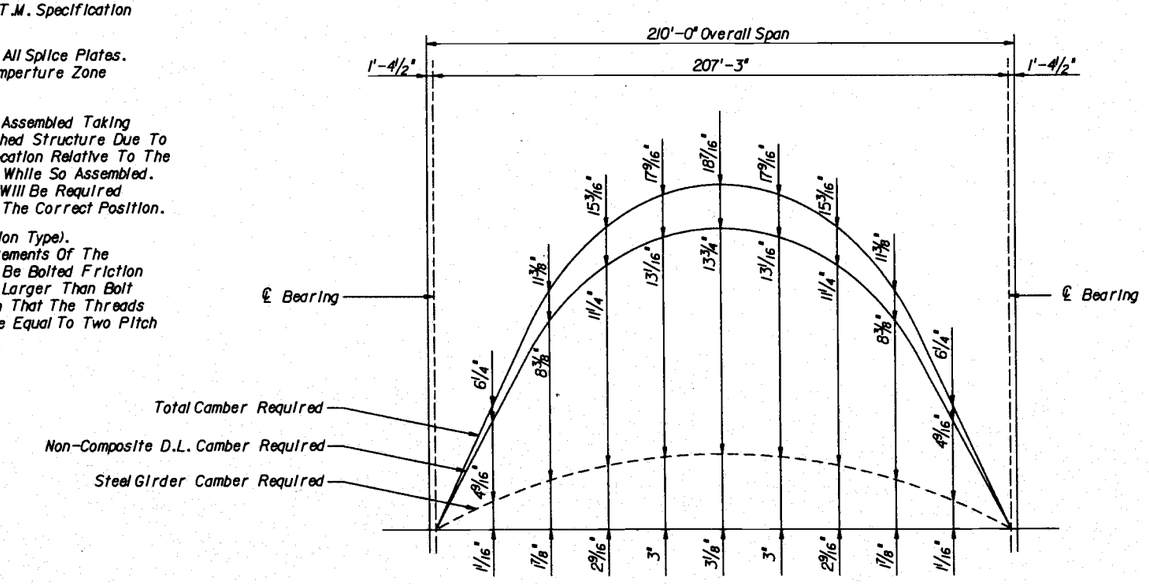

CAMBER DIAGRAM

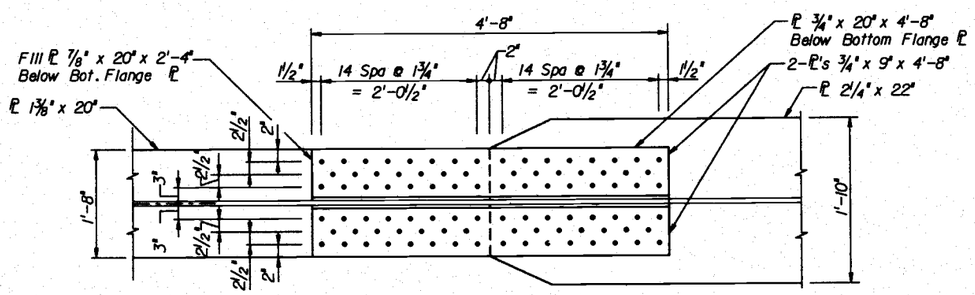

BOTTOM FLANGE SPLICE

CAMBER NOTES

1. Total Camber Includes Deflections Due To Steel Girder Dead Load, Total Concrete Dead Load Including Composite Dead Load And Vertical Curve.
2. Non-Composite Dead Load Camber Includes Dead Load Of Steel Girder And Concrete Deck Pour.
3. Steel Girder Camber Includes Deflections Due To Girder Self Weight Only.
4. Ordinates Computed Along ℄ Girders At Each 10 Equal Spaces Between ℄ Bearings.
5. Girders Shall Be Fabricated To Provide For The Total Dead Load Deflection And The Vertical Curve (Total Camber Required).

REVISIONS					
Date	By	Description	Date	By	Description

	Names	Dates
Drawn by	JJS	4/95
Checked by	MN	4/95
Designed by	MN	4/95
Checked by	PM	4/95
Approved by	Peeter Mannik, P.E.	

ENGINEER OF RECORD: DYER, RIDDLE, MILLS AND PRECOURT, INC. 1505 EAST COLONIAL DRIVE ORLANDO, FLORIDA 32803

LOGO: DYER, RIDDLE, MILLS AND PRECOURT, INC. ENGINEERS - SURVEYORS 1505 EAST COLONIAL DRIVE ORLANDO, FLORIDA 32803

SEAL:

FLORIDA DEPARTMENT OF TRANSPORTATION
STRUCTURES DESIGN OFFICE

ROAD NO.	COUNTY	PROJECT NO.
SR414	SEMINOLE	77002-3503

SHEET TITLE: GIRDER DETAILS

PROJECT NAME: MAITLAND BOULEVARD OVER LAKE BOSSE

Drawing No. 2 of 2

Index No.

LABSTDT.DGN

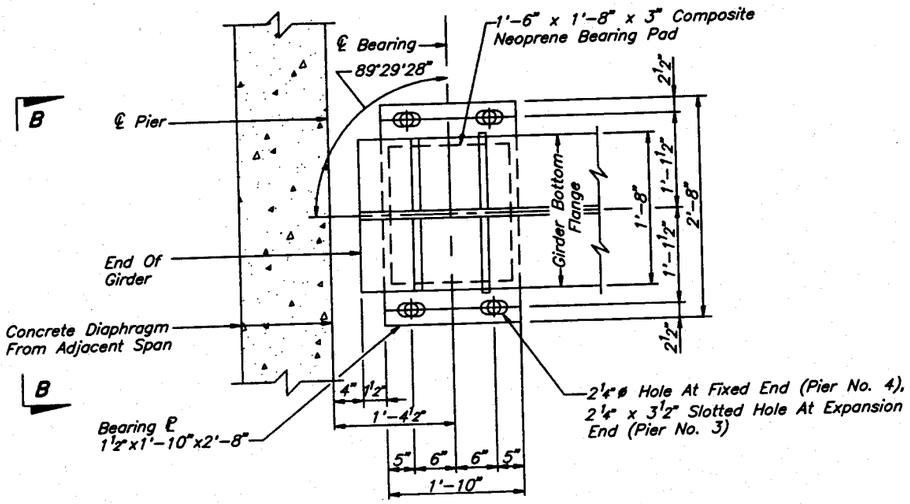

SECTION A-A

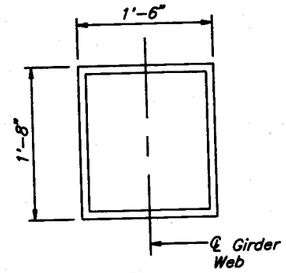

PLAN

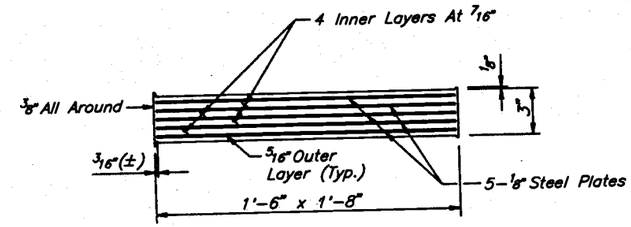

TYPICAL SECTION

NON - STANDARD COMPOSITE PAD

No. Req'd - 22 Units Total

COMPOSITE PAD NOTES

1. All Neoprene In Bearing Pads Shall Have A Grade 50 Durometer Hardness.
2. Steel Plates In Composite Bearing Pads Shall Conform To AASHTO M-251.
3. Variations In Pad Dimensions Will Be Allowed. Revised Pads Shall Meet The Current Specifications And Shall Be Approved By The Engineer.
4. Steel Bearing Plates, Anchor Bolts, Nuts And Washers Shall Be Hot Dip Galvanized In Accordance With A.S.T.M. Specification A-123. Payment For Steel Bearing Plate Assemblies Shall Be Included In The Contract Unit Price For Structural Steel.
5. Composite Neoprene Pads Shall Meet All Requirements Of The F.D.O.T. Specifications, Section 932-2.
6. The Contractor Shall Furnish All Neoprene Pads, And Shall Submit Shop Drawings For Approval Prior To Fabrication.

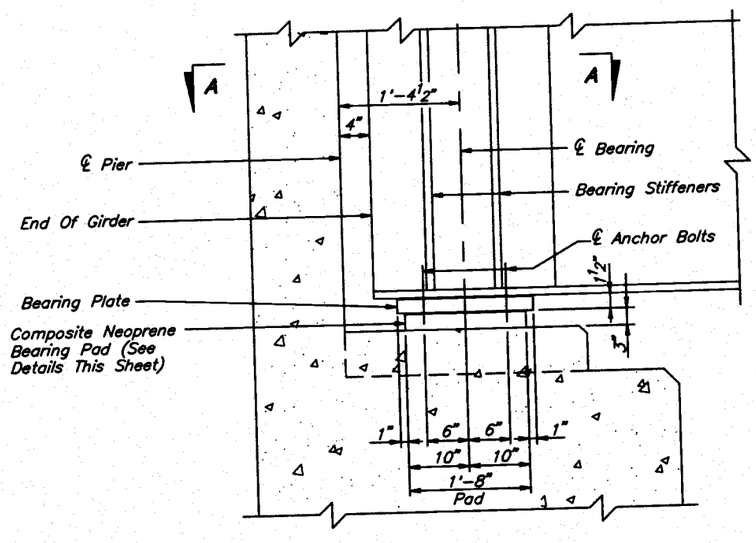

PART SECTION THRU GIRDER END

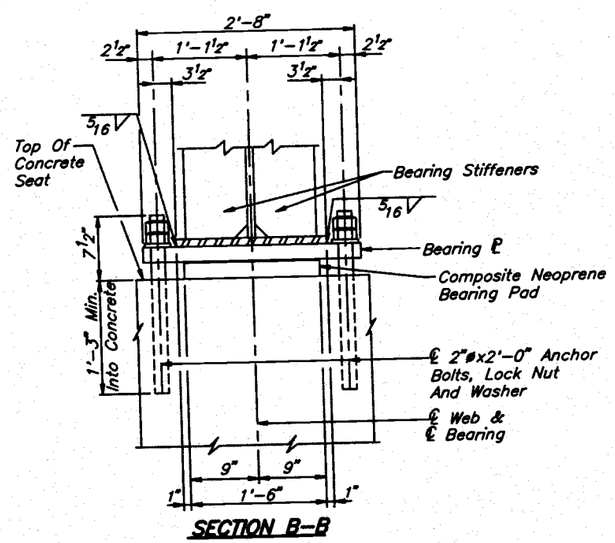

SECTION B-B

BEARING DETAILS

REVISIONS					
Date	By	Description	Date	By	Description

	Names	Dates
Drawn by	JJS	5/95
Checked by	MN	5/95
Designed by	MN	5/95
Checked by	PM	5/95
Approved by	PEETER MANNIK, P.E.	

ENGINEER OF RECORD: DYER, RIDDLE, MILLS AND PRECOURT, INC. 1505 EAST COLONIAL DRIVE ORLANDO, FLORIDA 32803

LOGO: DYER, RIDDLE, MILLS AND PRECOURT, INC. ENGINEERS - SURVEYORS 1505 EAST COLONIAL DRIVE ORLANDO, FLORIDA 32803

SEAL:

FLORIDA DEPARTMENT OF TRANSPORTATION
STRUCTURES DESIGN OFFICE

ROAD NO.	COUNTY	PROJECT NO.
SR414	SEMINOLE	77002-3503

SHEET TITLE: BEARING DETAILS - SPAN 3

PROJECT NAME: MAITLAND BOULEVARD OVER LAKE BOSSE

Drawing No.

Index No.

07/14/98 1:53PM C:\PROJECT\MAITLAND\MAITLAND.DGN

FED. ROAD DIV. NO.	STATE	PROJECT NO.	FISCAL YEAR	SHEET NO.
	FLA.			B-44

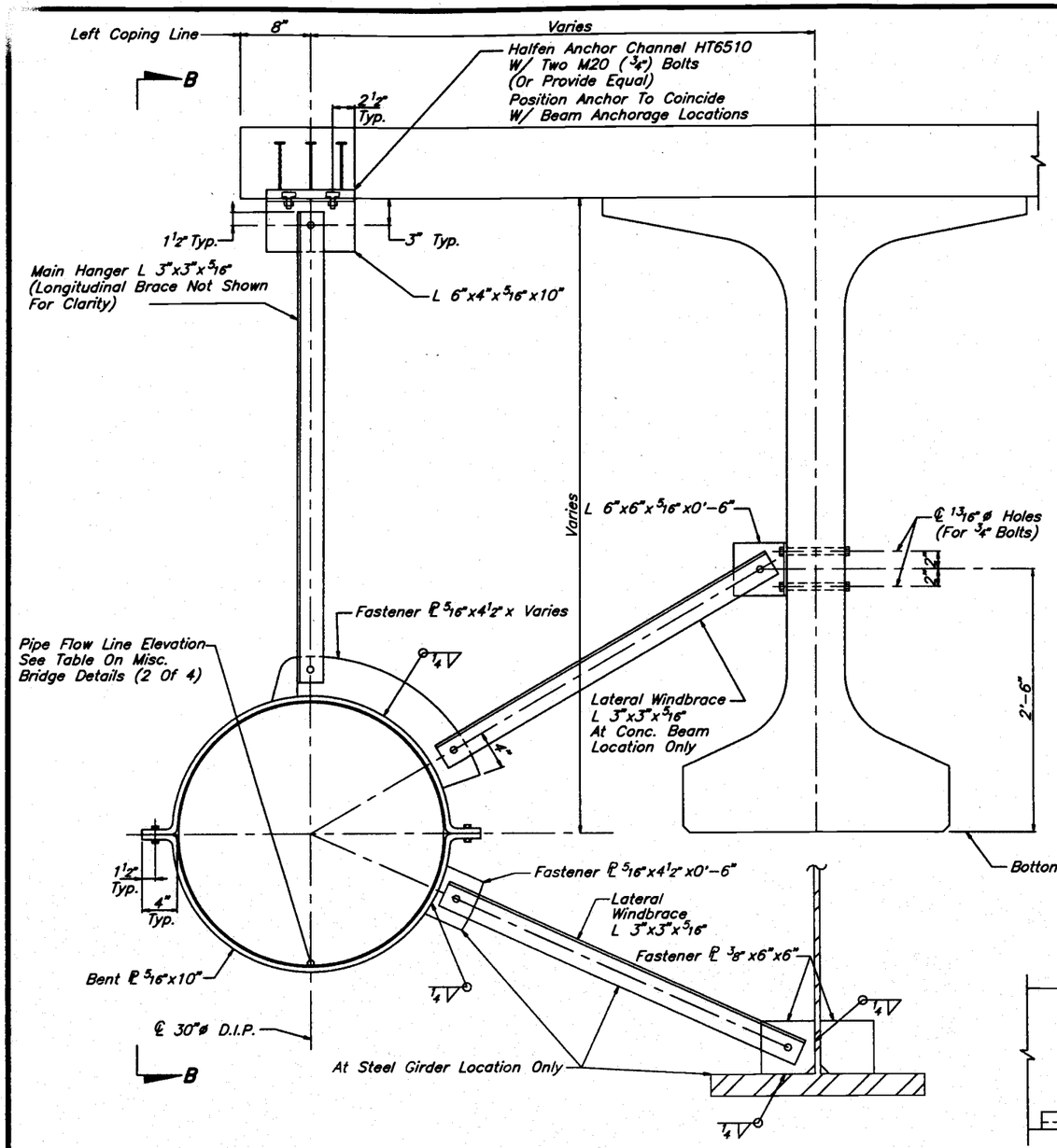

PIPE HANGER DETAIL
BRACED HANGER SHOWN
(SEE NOTE 1)

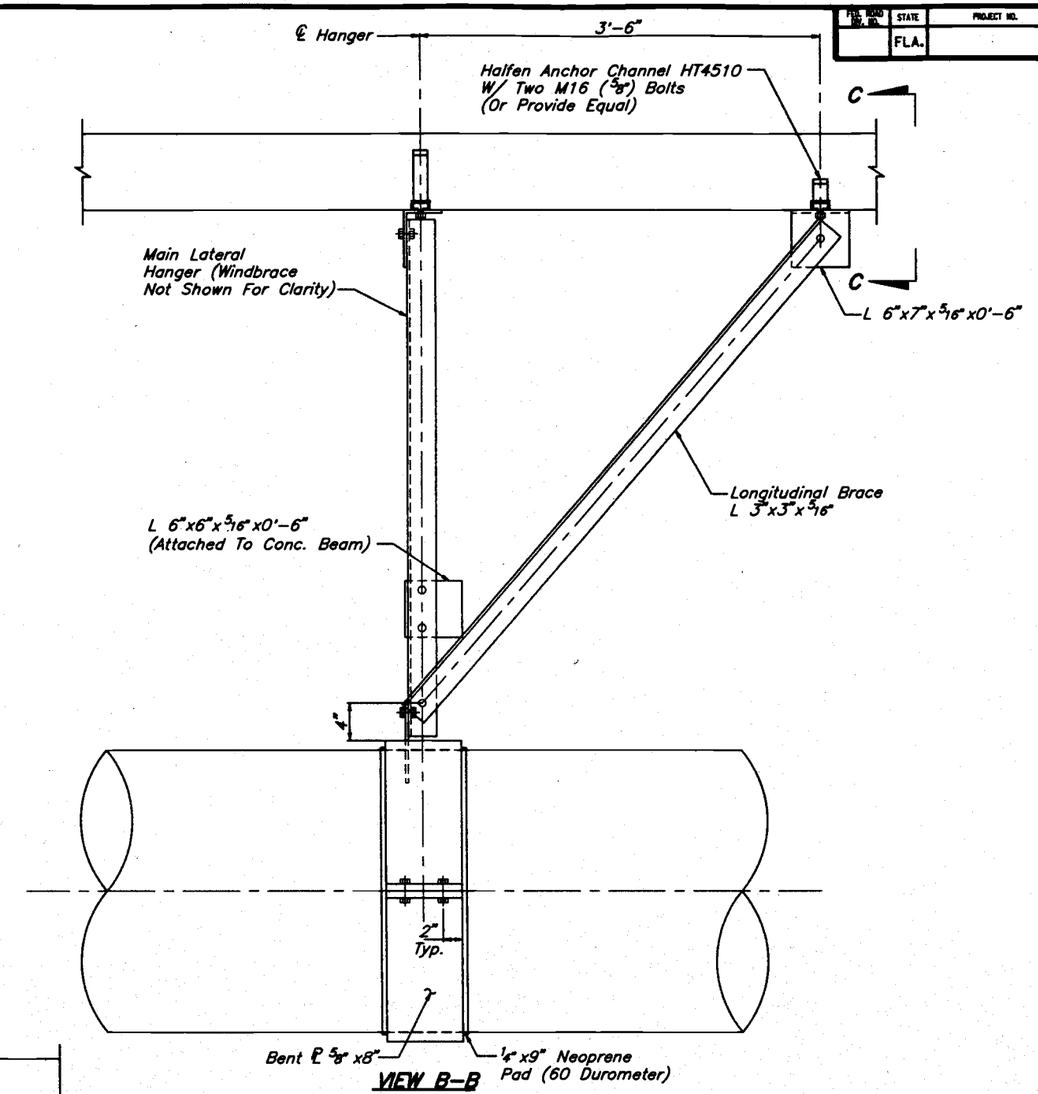

VIEW B-B

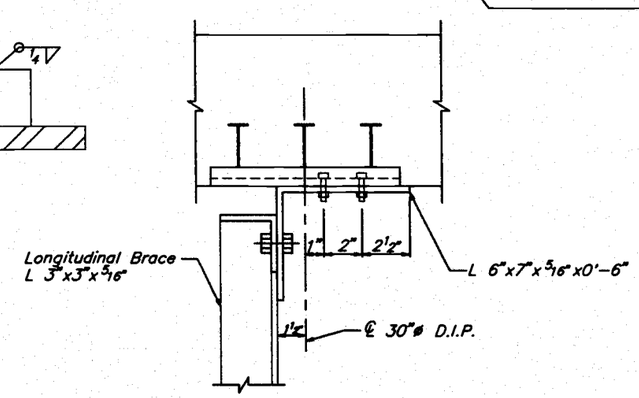

VIEW C-C

NOTES:

1. Hanger Types:
   Type A – Includes Main Hanger Only
   Type B – Includes Main Hanger, Lateral Wind Brace & Longitudinal Brace.
   For Hanger Type Location See Pipe Hanger Location Table, Miscellaneous Bridge Deatils, (2 OF 4).
2. All Supports And Attachment Hardware Shall Be ASTM A36 Steel And Hot Dipped Galvanized After Fabrication.
3. All Bolts And Nuts Are 3/4"ø And Shall Be 304 ST. STL. (U.N.O.)
4. Complete Sign & Sealed Drawings For Pipe Attachment Assembly Is Required.
5. Payment: The Cost Of The Pipe Hanger Assembly Shall Be Paid For Under Pay Item 1622-11-33 Bridge Hanger Anchor And Shall Include Anchorage, Neoprene Pads And Misc. Steel. The Cost Of The Ductile Iron Pipe Shall Be Paid For Under Pay Item 1613-140-233.
6. The Ductile Iron Pipe Shall Be A Push-On Joint type (Fastite Or Equal) With Class 150 Material Grade. The Pipe Lining Shall Be Per A.W.W.A. C-104.

REVISIONS

Date	By	Description	Date	By	Description

	Names	Dates
Drawn by	JLA	9/94
Checked by	MKA	9/94
Designed by	MKA	9/94
Checked by	PM	9/94
Approved by	Peeter Mannik, P.E.	

ENGINEER OF RECORD:
DYER, RIDDLE, MILLS AND PRECOURT, INC.
1505 EAST COLONIAL DRIVE
ORLANDO, FLORIDA 32803

LOGO:
DYER, RIDDLE, MILLS AND PRECOURT, INC.
ENGINEERS - SURVEYORS
1505 EAST COLONIAL DRIVE
ORLANDO, FLORIDA 32803

SEAL:

FLORIDA DEPARTMENT OF TRANSPORTATION
STRUCTURES DESIGN OFFICE

ROAD NO.	COUNTY	PROJECT NO.
	SEMINOLE	77002-3503

SHEET TITLE: MISCELLANEOUS BRIDGE DETAILS

Drawing No. 1 OF 4

PROJECT NAME: MAITLAND BOULEVARD OVER LAKE BOSSE

Index No.

A.S. 07/26/96 5:32PM C:\USR\MEN\LAN\LIBRARY\

FOLD HOLE DIV. NO.	STATE	PROJECT NO.	FISCAL YEAR	SHEET NO.
3	FLA.		98	B-48

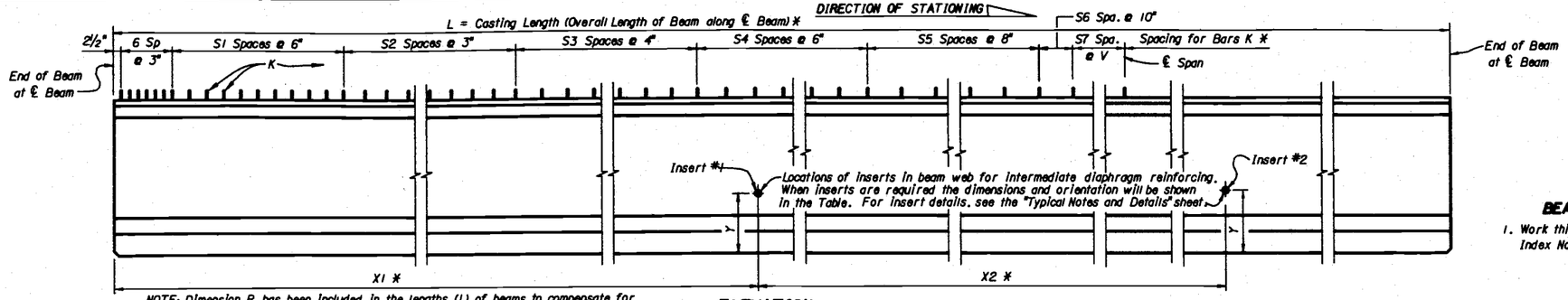

NOTE: Dimension R has been included in the lengths (L) of beams to compensate for elastic and time-dependent shortening effects.

ELEVATION

BEAM NOTES

1. Work this sheet with Standard Index No. 110.

* Note: All longitudinal beam dimensions shown on this sheet with a single asterisk (*) are measured along the top of the beam at the centerline of beam.

** Note: End of beam bearing dimensions "J" and "K" are measured along the bottom of the beam.

BILL OF REINFORCING STEEL FOR ONE BEAM ONLY

MARK	SIZE	NO. REQUIRED	LENGTH (1)
A	5	8	See Table
D (2)(6)	3	38	Varies 5'-11" Min
K (2)	4	See Table	7'-9"
L (3)(4)	4	22	6'-8"
M	4	See Table	3'-0"
N (5)	⅜"Ø Strand	4	See Table
Z (2)	4	28	7'-6"

BENDING DIAGRAMS(1)

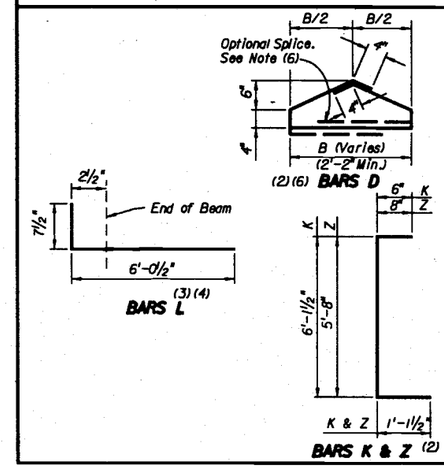

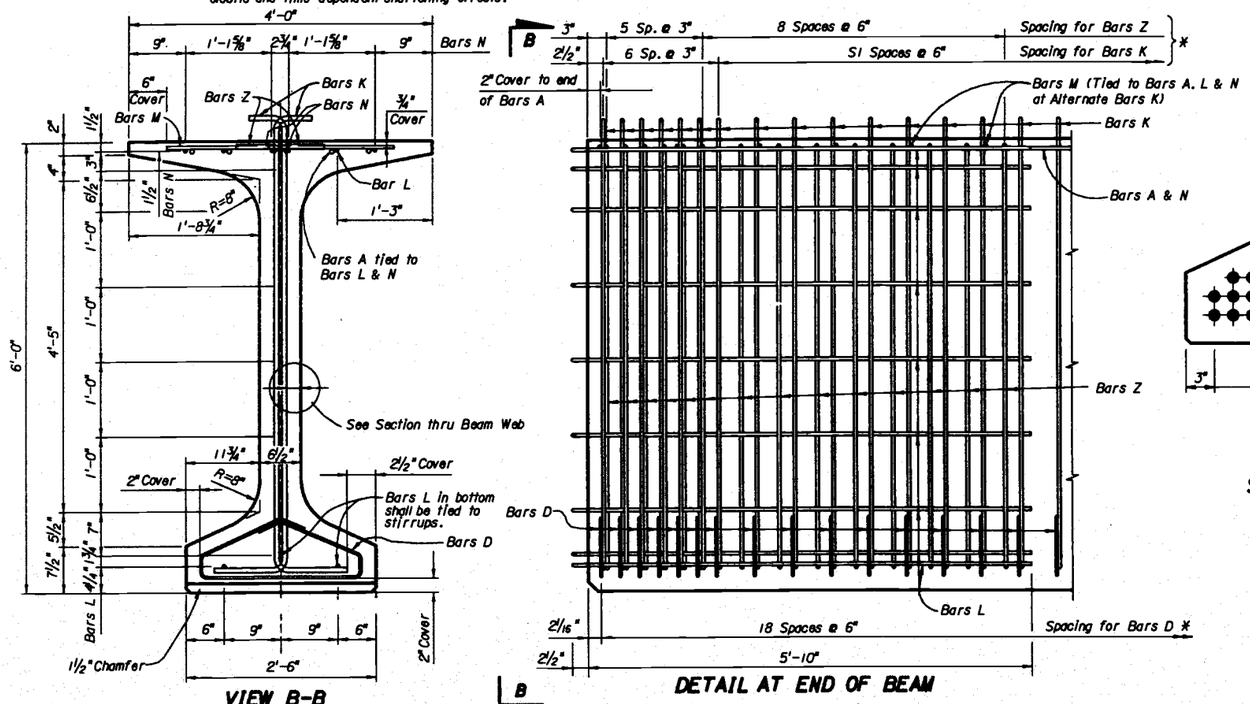

VIEW B-B

(With strands omitted, see Table for reference to strand pattern)

DETAIL AT END OF BEAM

NOTE: Stirrups shall be placed and tied to the top of the fully bonded prestressing strands in the bottom row.

‡ Dimension K: 11½" @ Pier; 1'-0¼" @ End Bent
NOTE: Place Bars K and Z one (1) each space (alternate).

½" Dia. -270K Low Relaxation Strands. Area/Strand = 0.153 In. Pull Each Strand To 30.98 Kips Per Strand

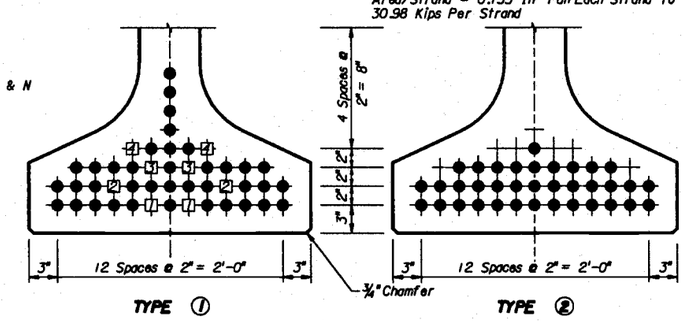

TYPE ① TYPE ②

STRAND PATTERNS AND DEBONDING SCHEDULE

NOTE:
- ● - Indicates fully bonded strands.
- 1 - Indicates referenced pair of strands to be debonded 30'-0" which is measured from the end of the beam. *
- 2 - Indicates referenced pair of strands to be debonded 20'-0" which is measured from the end of the beam. *
- 3 - Indicates referenced pair of strands to be debonded 10'-0" which is measured from the end of the beam. *
- 4 - Indicates referenced pair of strands to be debonded 5'-0" which is measured from the end of the beam. *

NOTES:

(1) All bar dimensions are out-to-out.

(2) Bars D, K, and Z shall be bent around pins having the following diameters for respective sizes:

Bar Size	Pin Diameters
#3	1"
#4	2"

(3) Bars L shall be bent prior to the beam leaving the prestressing yard. For treatment of bars L at skewed beam ends, see "Plan Ends of Beams".

(4) Caution should be used with Bars L in the ends of exterior beams to assure that the bent portion of the bar is properly oriented so that the bar will be embedded in the diaphragm concrete.

(5) Bars N shall be either ASTM A416, Grade 250 or 270, seven-wire strands ⅜" diameter or larger, stressed to 10,000 pounds each.

(6) The minimum Dimension B and length of Bars D shown apply to one-piece Bars D placed perpendicular to the centerline of the beam. Dimension B and the length of Bars D for beams with skewed ends vary with the skew (See "Plan Ends of Beams").
At the Contractor's option, Bars D may be fabricated either as a two-piece bar with a 1'-2" lap splice of the bottom legs or may be welded wire fabric, one or two-piece, provided the wire size and spacing furnishes the same steel area as the No. 3 Bars shown.

(7) (NS) means Near Side and (FS) means Far Side, both referring to which face of the beam web is to receive the insert for the dimensioned location. (NS) and (FS) are referenced to the DIRECTION OF STATIONING shown.

(8) Optional Stranding Shall Comply In All Respects With The Department's Structures Design Guidelines.

TABLE OF BEAM VARIABLES

BEAM ID.	CONCRETE PROPERTIES: CLASS	STRENGTHS: REL. (f'ci)	STRENGTHS: 28-DAY (f'c)	STND PTRN TYPE	PLAN VIEW CASE	END ELEV COND.	BRG. PLATE CASE	END OF BEAM AND BEARING DIMENSIONS **: ANGLE Ø	DIM P	DIM J	DIM K	BEAM DIMENSIONS *: DIM L	DIM R	DIM V	NUMBER OF SPACES FOR STIRRUP BARS K: S1	S2	S3	S4	S5	S6	S7	DIAPHRAGM INSERT LOCATIONS*: DIM X1	DIM X2	DIM Y	NS/FS (8): #1	#2	REINFORCING STEEL: A LENGTH*	K NO. REQ'D	M NO. REQ'D	N LENGTH*
B-1 Thru B-11	V	4500	6500	2	2	2	N/A	92°34'34"	½"	6½"	‡	91'-8⅞"	⅝"	0'-9 9/16"	8	0	28	10	0	30	1	-	-	-	-	-	13'-10"	167	84	92'-3"
B-12 Thru B-22	V	4500	6500	2	2	2	N/A	91°47'29"	7/16"	6½"	11½"	91'-9⅝"	⅝"	0'-10 5/16"	8	0	28	10	0	30	1	-	-	-	-	-	13'-10"	167	84	92'-3"
B-34 Thru B-44	V	4500	6500	1	3	3	N/A	89°11'14"	½"	6½"	11½"	100'-11⅞"	13/16"	1'-1"	8	16	21	16	27	8	1	-	-	-	-	-	15'-2"	207	104	101'-5"
B-45 Thru B-55	V	4500	6500	1	3	3	N/A	88°19'30"	9/16"	6½"	11½"	100'-11⅞"	13/16"	1'-1"	8	16	21	16	27	8	1	-	-	-	-	-	15'-2"	207	104	101'-5"
B-56 Thru B-66	V	4500	6500	1	3	3	N/A	87°27'46"	9/16"	6½"	‡	100'-11⅛"	13/16"	1'-0¼"	8	16	21	16	27	8	1	-	-	-	-	-	15'-2"	207	104	101'-5"

REVISIONS: Date	By	Description	Date	By	Description
			92R		

	Names	Dates
Drawn by	JJS	6/95
Checked by	KCH	6/95
Designed by	KCH	6/95
Checked by		
Approved by		

ENGINEER OF RECORD: DYER, RIDDLE, MILLS AND PRECOURT, INC. 1505 EAST COLONIAL DRIVE ORLANDO, FLORIDA 32803

LOGO: DYER, RIDDLE, MILLS AND PRECOURT, INC. ENGINEERS - SURVEYORS 1505 EAST COLONIAL DRIVE ORLANDO, FLORIDA 32803

SEAL:

FLORIDA DEPARTMENT OF TRANSPORTATION
STRUCTURES DESIGN OFFICE

ROAD NO.	COUNTY	PROJECT NO.
SR414	SEMINOLE	77002-3503

SHEET TITLE: FLORIDA BULB-T 72 BEAMS

PROJECT NAME: MAITLAND BOULEVARD OVER LAKE BOSSE

Drawing No. 1 of 1

Index No. S-113

PD&E Plans

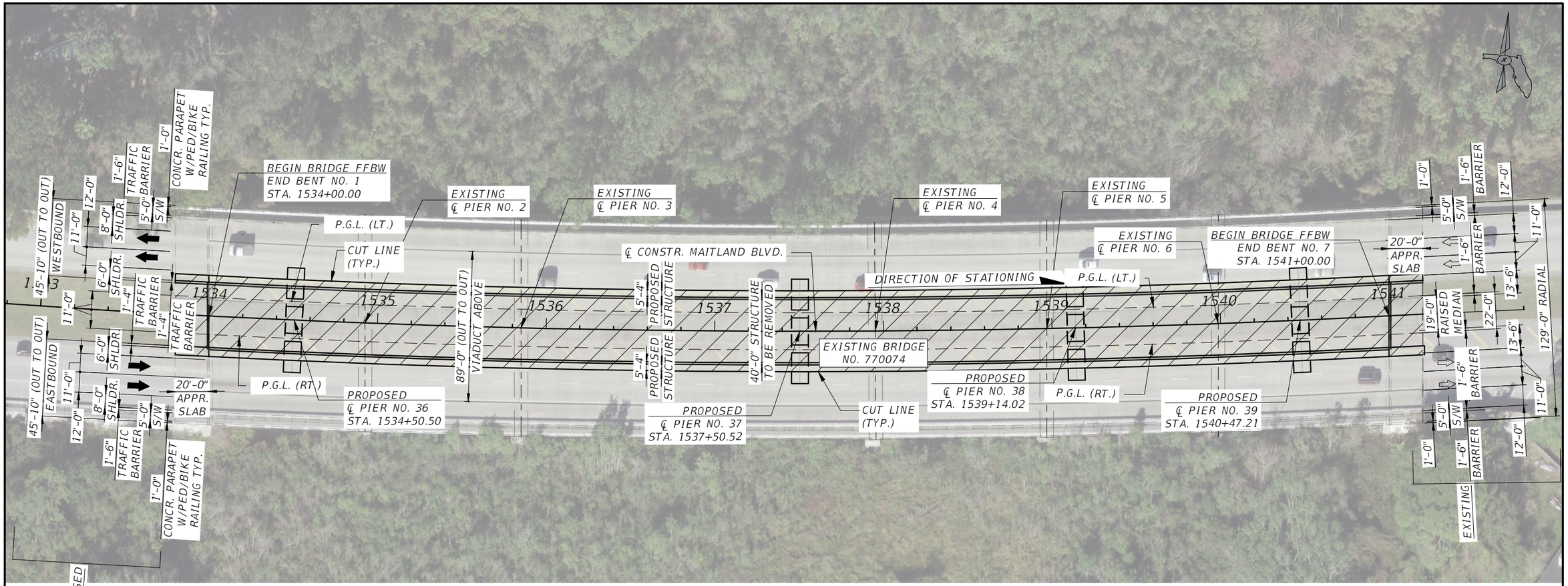

PLAN

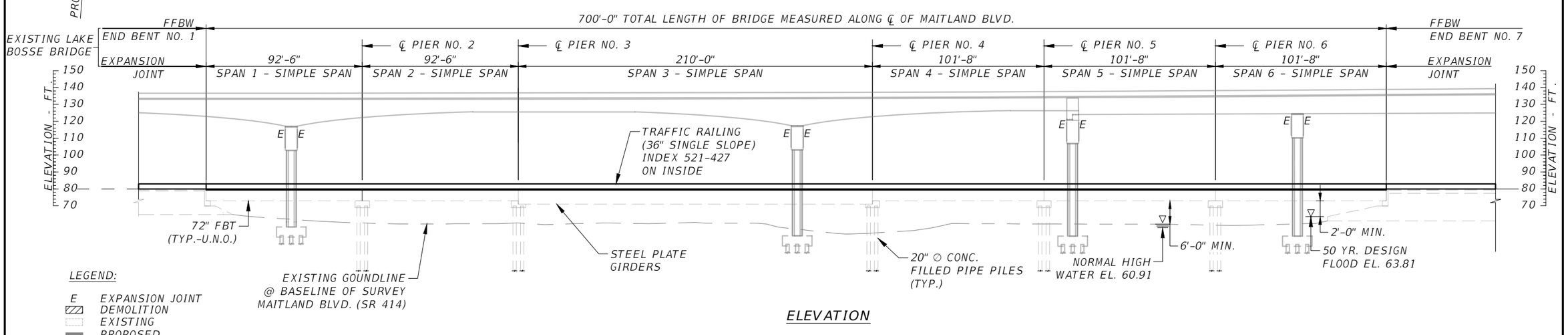

ELEVATION

REVISIONS			
DATE	DESCRIPTION	DATE	DESCRIPTION

RAM KOZHIKOTE
P.E. LICENSE NUMBER 44022
BASE CONSULTANTS
1214 EAST CONCORD STREET
ORLANDO, FL 32803

SR 414 MAITLAND BLVD.
EXPRESSWAY EXTENSION
US 441 TO SR 434

ROAD NO.	PROJECT NO.
SR 414	414-227

CENTRAL FLORIDA EXPRESSWAY AUTHORITY

SHEET TITLE: PLAN AND ELEVATION

PROJECT NAME: SR 414 (MAITLAND BLVD.) OVER LAKE BOSSE

REF. DWG. NO.

SHEET NO. B2-1

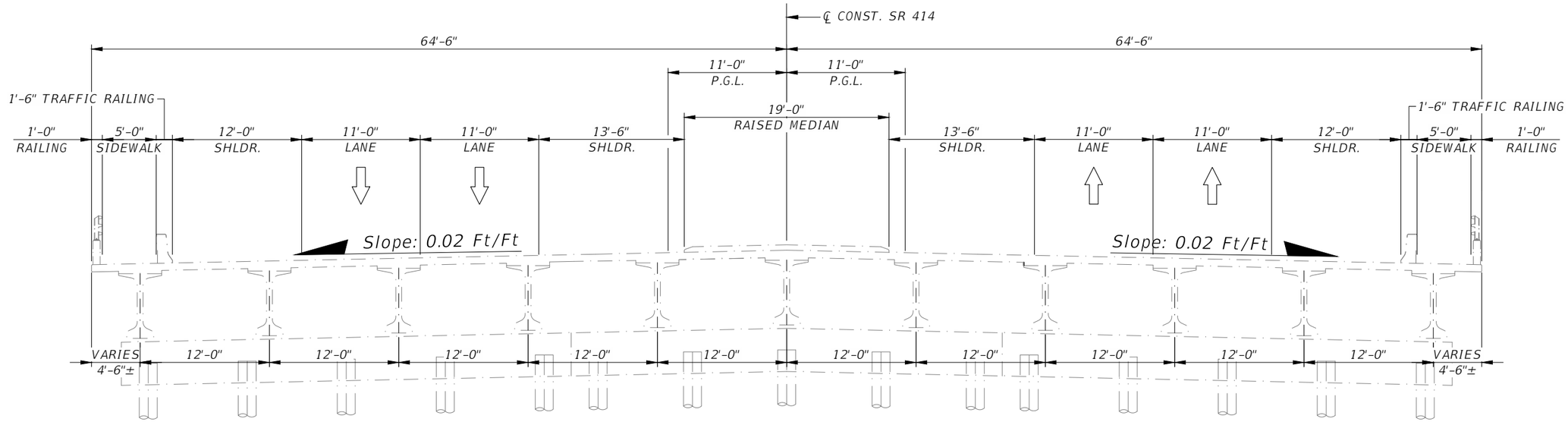

EXISTING TYPICAL SECTION

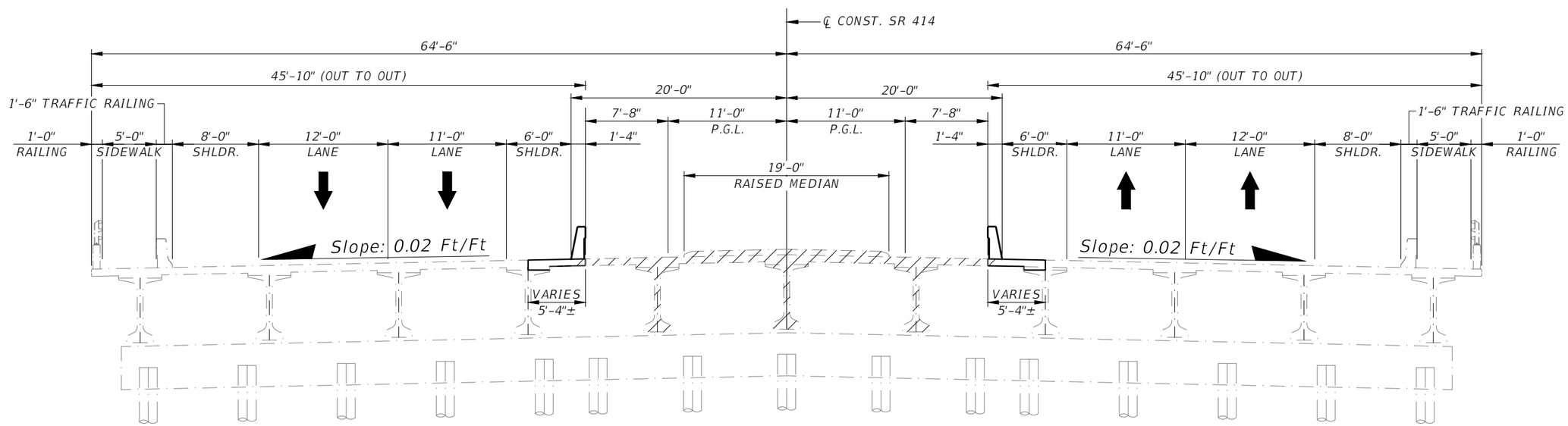

WESTBOUND BRIDGE

PROPOSED TYPICAL SECTION

EASTBOUND BRIDGE

LEGEND

EXISTING STRUCTURE TO BE REMOVED

REVISIONS			
DATE	DESCRIPTION	DATE	DESCRIPTION

RAM KOZHIKOTE
P.E. LICENSE NUMBER 44022
BASE CONSULTANTS
1214 EAST CONCORD STREET
ORLANDO, FL 32803

SR 414 MAITLAND BLVD.
EXPRESSWAY EXTENSION
US 441 TO SR 434

ROAD NO.	PROJECT NO.
SR 414	414-227

CENTRAL FLORIDA EXPRESSWAY AUTHORITY

SHEET TITLE: TYPICAL BRIDGE SECTION

REF. DWG. NO.

PROJECT NAME: SR 414 (MAITLAND BLVD.) OVER LAKE BOSSE

SHEET NO. B2-2

THE OFFICIAL RECORD OF THIS SHEET IS THE ELECTRONIC FILE DIGITALLY SIGNED AND SEALED UNDER RULE 61G15-23.004, F.A.C.

4. Calculations

a. LEAP Concrete Bridge Input – Span 1 and 2

PROJECT DATA

Project:	SR 417 OVER LAKE BOSSE
Designer:	KV
Date:	Jan/7/2021
Checked By:	RK
Date Checked:	Jan/7/2021
User job number:	
State:	FL, State Job #:CFX # 414-227
State Specification:	None
Design Code:	AASHTO LRFD - 8th Edition
Units:	US
Span Type:	Multi-Span (Continuous)
Flared Girder:	No
File Name:	C:\Users\KaranBASE\AppData\Local\Temp\OBD20210802104510442\Standalone\Standalone2\Span-1-2WB(5ft).lbcx

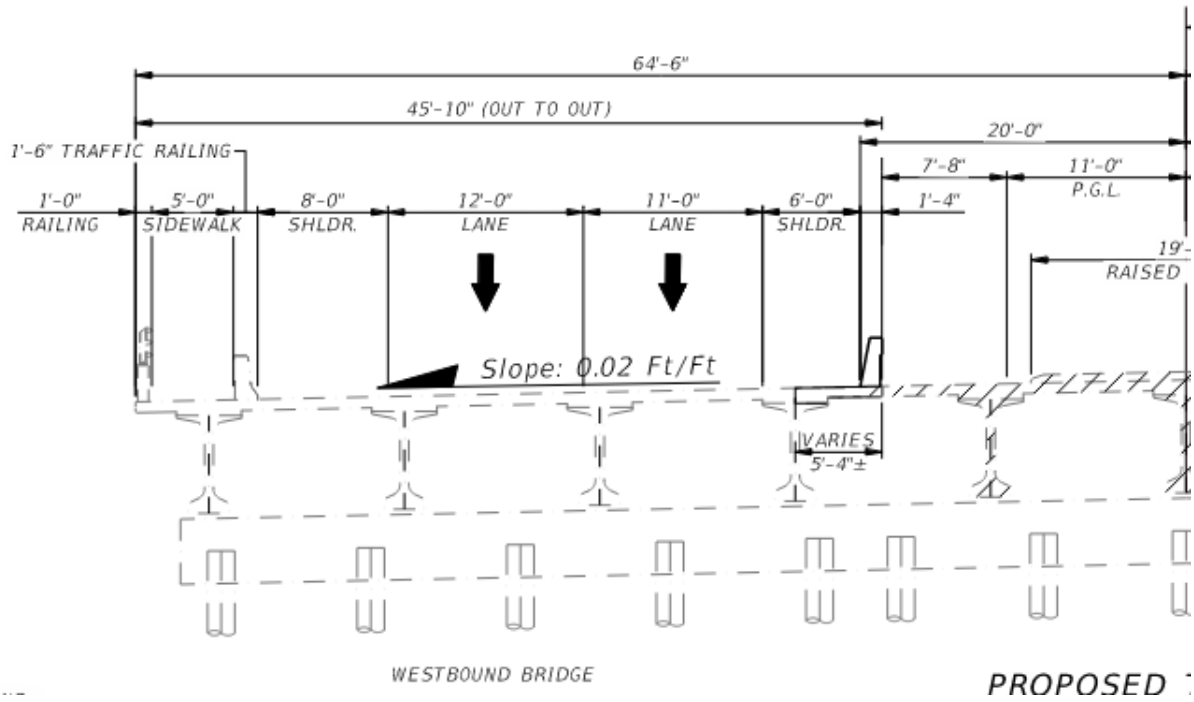

GEOMETRY DATA

BRIDGE LAYOUT

Overall Width (ft)	45.844
Left curb (ft)	1.500
Right curb (ft)	1.500
Curb-to-curb width (ft)	42.844
Number of spans	2
Number of lanes	3
Lane width (ft)	12.000
Eff Deck thick (in)	8.000
Sacrificial thick (in)	0.000
Haunch thickness (in)	2.000
Haunch width (in)	48.000

SPAN DATA

Span	Pier-to-pier ft	Precast ft	Brg-to-brg ft	Pier CL ft	Release ft	StartSkew	EndSkew	Bridge c/s M.I. in4
1	92.500	92.000	91.000	0.000	92.000	2.97	2.18	6230230.50
2	92.500	92.000	91.000	0.500	92.000	2.18	2.40	6230230.50

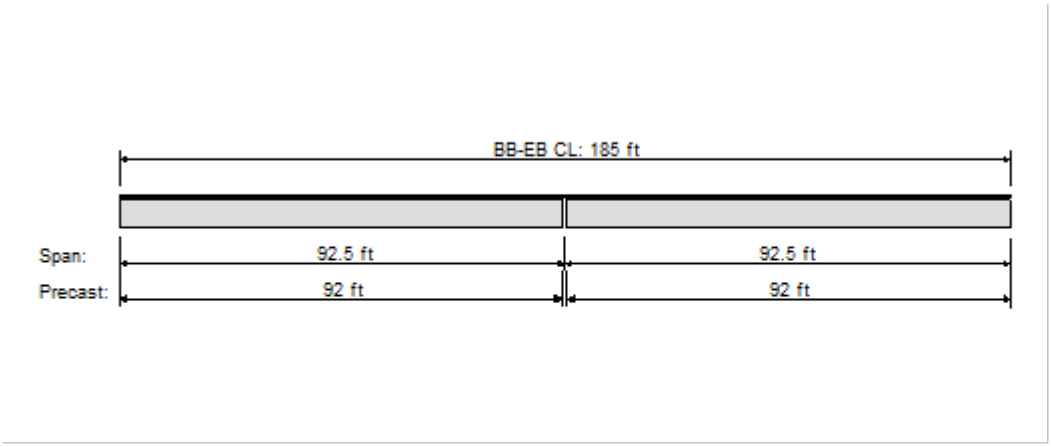

BR01 - Bridge elevation

BEAM DATA

Span: 1

No	ID	Loc-prev ft	Area in2	MI(Ixx) in4	Height in	Yb in	B-topg in	B-trib ft
1	Florida bulb tee-72	4.511	901.1	639096.4	72.00	34.34	48.00	10.511
2	Florida bulb tee-72	12.000	901.1	639096.4	72.00	34.34	48.00	12.000
3	Florida bulb tee-72	12.000	901.1	639096.4	72.00	34.34	48.00	12.000
4	Florida bulb tee-72	12.000	901.1	639096.4	72.00	34.34	48.00	11.333

Span: 2

No	ID	Loc-prev ft	Area in2	MI(Ixx) in4	Height in	Yb in	B-topg in	B-trib ft
1	Florida bulb tee-72	4.511	901.1	639096.4	72.00	34.34	48.00	10.511
2	Florida bulb tee-72	12.000	901.1	639096.4	72.00	34.34	48.00	12.000
3	Florida bulb tee-72	12.000	901.1	639096.4	72.00	34.34	48.00	12.000
4	Florida bulb tee-72	12.000	901.1	639096.4	72.00	34.34	48.00	11.333

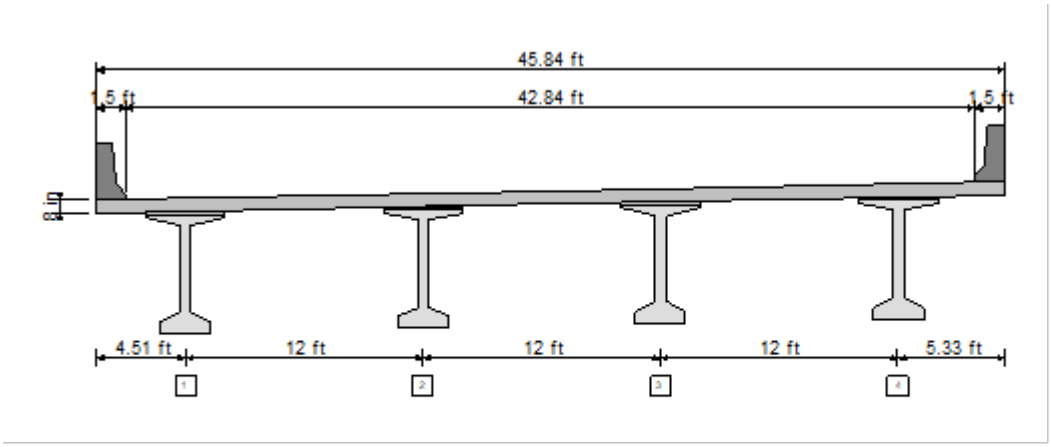

BR01 - Bridge cross section for Span 1, Span 2

MATERIAL DATA - Project Level

As defined in Material Tab. For beam level properties look at Beam Specific output.

CONCRETE PROPERTIES

	Precast Release	Precast Final	C.I.P
f'c (ksi)	4.500	6.500	4.500
Wc (pcf)	150.000	150.000	150.000
Concrete Type	Normal	Normal	Normal
Lambda	1.000	1.000	1.000
Ec (ksi)	4435.310	5007.550	4435.310
K1	1.000	1.000	1.000
Thermal coeff.(1/°F)	0.00000600		

STRAND AND REBAR PROPERTIES

PRESTRESSED STEEL:

1/2-270K-LL, Low relaxation strands
Straight Pattern
Strand Diameter = 0.500 in
Tensile Strength(fpu) = 270.0 ksi
Use transformed strand and rebar: No

REINFORCING STEEL:

Tension/Shear steel: fy = 60.0 ksi Es = 29000 ksi

LOADS DATA

Loads generated using Permanent Load Wizard: YES

Left Barrier Weight, klf	0.255
Right Barrier Weight, klf	0.000
Left Curb Weight, klf	0.420
Right Curb Weight, klf	0.430
Left Sidewalk, klf	0.080
Right Sidewalk, klf	0.000
Future Wearing Surface, ksf	0.015
Sacrificial Wearing Surface, in	0.000
Stay in Place Deck Forms, klf	0.160

DEAD LOADS ON PRECAST

UNITS: (Point: kips, Location: ft, Line: klf, Trapez: klf)

Span	Beam	DC/DW	Type	Mag.1	Loc.1	Mag.2	Loc.2	Description
1	1	DC	Line	0.160	0.000	0.160	91.000	Stay-in-Place Deck Forms
1	2	DC	Line	0.160	0.000	0.160	91.000	Stay-in-Place Deck Forms
1	3	DC	Line	0.160	0.000	0.160	91.000	Stay-in-Place Deck Forms
1	4	DC	Line	0.160	0.000	0.160	91.000	Stay-in-Place Deck Forms
2	1	DC	Line	0.160	0.000	0.160	91.000	Stay-in-Place Deck Forms
2	2	DC	Line	0.160	0.000	0.160	91.000	Stay-in-Place Deck Forms
2	3	DC	Line	0.160	0.000	0.160	91.000	Stay-in-Place Deck Forms
2	4	DC	Line	0.160	0.000	0.160	91.000	Stay-in-Place Deck Forms

DIAPHRAGM LOADS - using Wizard

Span	Magnitude (plf)	Location (ft)	Skew (deg)
1	0.637	0.000	2.110
1	0.637	90.500	2.110
2	0.637	1.000	2.110
2	0.637	90.750	2.110

Span	Beam	Load (kips)	Location (ft)
1	1	0.004	0.276
1	1	0.004	90.224
1	2	0.007	0.096
1	2	0.007	90.404
1	3	0.007	0.084
1	3	0.007	90.584
1	4	0.004	0.264
1	4	0.004	90.764
2	1	0.004	0.976
2	1	0.004	90.726
2	2	0.007	0.992
2	2	0.007	90.742
2	3	0.007	1.007
2	3	0.007	90.757
2	4	0.004	1.023
2	4	0.004	90.773

DEAD LOADS ON COMPOSITE

UNITS: (Point: kips, Location: ft, Line: klf, Trapez: klf, Area: ksf, Width: ft)

Span	DC/DW	Type	Mag.1	Loc.1/Width	Mag.2	Loc.2	Description
1	DC	Line	0.420	0.000	0.420	91.000	Left Curb Weight
1	DC	Line	0.430	0.000	0.430	91.000	Right Curb Weight
1	DC	Line	0.255	0.000	0.255	91.000	Left Barrier Weight
1	DC	Line	0.080	0.000	0.080	91.000	Left Sidewalk
1	DW	Line	0.116	0.000	0.116	91.000	Utility
1	DW	Area	0.015	42.844	-	-	Future Wearing Surface
2	DC	Line	0.420	0.000	0.420	91.000	Left Curb Weight
2	DC	Line	0.430	0.000	0.430	91.000	Right Curb Weight
2	DC	Line	0.255	0.000	0.255	91.000	Left Barrier Weight
2	DC	Line	0.080	0.000	0.080	91.000	Left Sidewalk
2	DW	Line	0.116	0.000	0.116	91.000	Utility
2	DW	Area	0.015	42.844	-	-	Future Wearing Surface

TEMPERATURE LOADS - NONE

LIVE LOADS

Live load deflection: not included.

ID	Type
Design Lane	Design Lane
Design Tandem	Design Tandem
Design Truck	Design Truck
Double Truck	Double Truck

Pedestrian Load - NONE

LIVE LOADS USED

LIVE LOAD LIBRARY: USLRFDTruckLib.shlib

1 ID: Design Lane

Description:	Design Lane as in AASHTO-LRFD
Type:	Design Lane

Lane Load:	Intensity = 0.64 klf,	Width = 10.00 ft

2 ID: Design Tandem

Description:	Design Tandem as in AASHTO-LRFD
Type:	Design Tandem

First Axle Magnitude = 25.00 k,	Wheel Spacing = 6.00 ft,	Truck Width = 10.00 ft

#	Magnitude, k	Max Spacing, ft	Min Spacing, ft	Increment, ft
1	25.00	4.00	4.00	0.00

3 ID: Design Truck

Description:	Design Truck as in AASHTO-LRFD
Type:	Design Truck

First Axle Magnitude = 8.00 k,	Wheel Spacing = 6.00 ft,	Truck Width = 10.00 ft

#	Magnitude, k	Max Spacing, ft	Min Spacing, ft	Increment, ft
1	32.00	14.00	14.00	0.00
2	32.00	30.00	14.00	2.00

4 ID: Double Truck

Description:	Double Truck as in AASHTO-LRFD
Type:	Double Truck

First Axle Magnitude = 8.00 k,	Wheel Spacing = 6.00 ft,	Truck Width = 10.00 ft

#	Magnitude, k	Max Spacing, ft	Min Spacing, ft	Increment, ft
1	32.00	14.00	14.00	0.00
2	32.00	14.00	14.00	0.00
3	8.00	300.00	50.00	14.00
4	32.00	14.00	14.00	0.00
5	32.00	14.00	14.00	0.00

5 ID: Fatigue Truck

Description:	Fatigue Truck as in AASHTO-LRFD
Type:	Fatigue Truck

First Axle Magnitude = 8.00 k,	Wheel Spacing = 6.00 ft,	Truck Width = 10.00 ft

#	Magnitude, k	Max Spacing, ft	Min Spacing, ft	Increment, ft
1	32.00	14.00	14.00	0.00
2	32.00	30.00	30.00	0.00

RATING LOADS

Design Live Load Type,	Weight (tons),	Wheel Spacing(ft)
HL93 Design Load	-	-

Permit Live Load Type,	Weight (tons),	Wheel Spacing(ft)
FL120	60.00	6.00

RATING LOADS DETAILS
Design Rating Loads:

1 ID: HL93 Design Load

Description:	HL93 Design Load - Internal
Type:	Design Lane + Design Truck + Design Tandem + Double Truck

* HL93 Internal loads:

HL93 Load ID: Design Lane *

Description:	Design Lane - Internal
Type:	Design Lane

Lane Load:	Intensity = 0.64 klf,	Width = 10.00 ft

HL93 Load ID: Design Tandem *

Description:	Design Tandem - Internal
Type:	Design Tandem

First Axle Magnitude = 25.00 k,	Wheel Spacing = 6.00 ft,	Truck Width = 10.00 ft

#	Magnitude, k	Max Spacing, ft	Min Spacing, ft	Increment, ft
1	25.00	4.00	4.00	0.00

HL93 Load ID: Design Truck *

Description:	Design Truck - Internal
Type:	Design Truck

First Axle Magnitude = 8.00 k,	Wheel Spacing = 6.00 ft,	Truck Width = 10.00 ft

#	Magnitude, k	Max Spacing, ft	Min Spacing, ft	Increment, ft
1	32.00	14.00	14.00	0.00
2	32.00	30.00	14.00	2.00

HL93 Load ID: Double Truck *

Description:	Double Truck - Internal
Type:	Double Truck

First Axle Magnitude = 8.00 k,	Wheel Spacing = 6.00 ft,	Truck Width = 10.00 ft

#	Magnitude, k	Max Spacing, ft	Min Spacing, ft	Increment, ft
1	32.00	14.00	14.00	0.00
2	32.00	14.00	14.00	0.00
3	8.00	300.00	50.00	14.00
4	32.00	14.00	14.00	0.00
5	32.00	14.00	14.00	0.00

Permit Rating Loads:

1 ID: FL120

Description:	FL120 Permit Vehicle
Type:	Permit Vehicle

Uniform Load	Intensity, klf	Location, ft	Length, ft
Preceding	0.00	0.00	0.00
Trailing	0.00	0.00	0.00

First Axle Magnitude = 13.33 k,	Wheel Spacing = 6.00 ft,	Truck Width = 10.00 ft

#	Magnitude, k	Max Spacing, ft	Min Spacing, ft	Increment, ft
1	53.33	14.00	14.00	0.00
2	53.33	14.00	14.00	0.00

ANALYSIS DATA

ANALYSIS PARAMETERS DATA

Truck impact:	1.330
Lane impact:	1.000
Strength II impact:	1.330
Fatigue impact:	1.150

DISTRIBUTION FACTORS (Art. 4.6.2.2):

Include sacrificial deck thick in ts:	NO
Is Span Post-tensioned:	NO
Include Rigid Cross Section Assumption (Art. 4.6.2.2.2d):	YES
ADTT (Average Daily Truck Traffic) :	5000
Percent of the specified force effect :	1.00
Apply reduction of Moment for skew:	YES

NOTE: Beam specific dead and live load DFs are printed in beam level reports.

LOAD FACTORS: (Table 3.4.1-1 & 3.4.1-2)

	Live	DC(max)	DC(min)	DW(max)	DW(min)
Service I:	1.00	1.00	1.00	1.00	1.00
Service III:	0.80	1.00	1.00	1.00	1.00
Strength I:	1.75	1.25	0.90	1.50	0.65
Fatigue I:	1.75	-	-	-	-

Ductility Factor:	1.00
Redundancy Factor:	1.00
Importance Factor:	1.00

PROJECT DESIGN PARAMETERS

MULTIPLIERS:

Trans len mult:	Bonded	1.00
	Debonded	1.00
Dev len mult:	Bonded	1.60
	Debonded	2.00

Camber & Deflection Multiplier (PCI ref.)

	Erection	Final
Prestress:	1.80	2.20
Self. Wt:	1.85	2.40
Deck + Haunch:		2.30
Diaphragm:		3.00
DL-Prec.:		3.00
DL-Comp.:		3.00

MOMENT AND SHEAR PROVISIONS:

Ultimate Moment Capacity, Mu-prvd computed:	AASHTO equations
Horizontal Shear, Beam and Slab effects in Vu:	INCLUDED
Negative Moment Design, Non-composite Moment effects in Mu:	INCLUDED

STRESS LIMITS (Art. 5.9.2):
STRESS LIMITS AT RELEASE BEFORE LOSSES (Using Advanced Settings):

		PRECAST	
Strength		4.50	ksi
Elasticity		4435.3	ksi
Max comp		2.93	ksi
Outer	15.00 %		
Max tens		-0.19	ksi
Max tens,	w/reinf	-0.81	ksi
Center	70.00 %		
Max tens		-0.19	ksi
Max tens,	w/reinf	-0.51	ksi

STRESS LIMITS AT FINAL AFTER LOSSES:

	PRECAST		DECK	
Strength	6.50	ksi	4.50	ksi
Elasticity	5007.55	ksi	4435.31	ksi

STRESS LIMITS AT FINAL 1 (P/S + DL + LL):

	PRECAST		DECK	
Max comp	3.90	ksi	2.70	ksi

STRESS LIMITS AT FINAL 2 (P/S + DL):

	PRECAST		DECK	
Max comp	2.93	ksi	2.02	ksi

FATIGUE I STRESS LIMITS AT FINAL 3 (50% P/S + 50% DL + F_LL) (Art. 5.5.3.1):

	PRECAST		DECK	
Max comp	2.60	ksi	-	ksi

SERVICE III (Tension):

	PRECAST		DECK	
Max tens	-0.60	ksi	-0.40	ksi

RESISTANCE FACTORS (Art. 5.5.4.2):

Flexure Reinforced	
Compression controlled sections	0.75
Tension controlled sections	0.90
Flexure Prestressed	
Compression controlled sections	0.75
Tension controlled sections	1.00
Shear	0.90

PRESTRESS LOSSES:

Time Dependent Losses, Approximate Method (Art.5.9.3.3)
Days to release = 0.75
Rel. Humid.(RH) = 75.0 %

RATING PARAMETERS

Rating Factors	References	Values
Condition Factor	Table 6A.4.2.3-1	1.00
System Factor for Flexural Effect	Table 6A.4.2.4-1	1.00
System Factor for Shear Effect	Art. 6A.4.2.4	1.00
ADTT	Section C3.6.1.1.2	5000
Dynamic Load Factor for Design Level	Art. 6A.4.3.3	0.33
Dynamic Load Factor for Legal and Permit Level	Table C6A.4.4.3-1	0.33

For Flexural Effect: Condition Factor * System Factor = 1.00 >= 0.85 (Art. 6A.4.2.1) OK
For Shear Effect: Condition Factor * System Factor = 1.00 >= 0.85 (Art. 6A.4.2.1 and 6A.4.2.4) OK

Dead Load Factors (Table 6A.4.2.2-1)

Limit State	DC	DW
Strength I	1.25	1.50
Strength II	1.25	1.50
Service I	1.00	1.00
Service III	1.00	1.00

Design Live Load Factors (Table 6A.4.3.2.2-1)

Limit State	Inventory	Operating
Strength I	1.75	1.35
Service I	-	-
Service III	0.80	-

Permit Live Load Factors (Table 6A.4.5.4.2a-1)

Load	Type	Frequency	Loading Condition	Permit Factor
FL120	Routine	Unlimited	Mix with traffic	1.30

Permit Live Load Stresses Factors

Limit State	Values
Service I	1.00
Service III	-

Allowable Stresses (ksi)

Rating Level	Concrete Compression	Concrete Tension	Steel
Design Inventory	0.60 x f'c = 3.90	0.19 x sqrt(f'c) = 0.48	0.90 x f'y = 218.70
Design Operating	0.60 x f'c = 3.90	0.19 x sqrt(f'c) = 0.48	0.90 x f'y = 218.70
Legal	0.60 x f'c = 3.90	0.19 x sqrt(f'c) = 0.48	-
Permit	0.60 x f'c = 3.90	0.19 x sqrt(f'c) = 0.48	0.90 x f'y = 218.70

Consider shear reinf. across plane (FDOT alternative): Yes

BEAM REINFORCEMENT

BEAM SPECIFIC MATERIAL PROPERTIES:

Span#, Beam#	Tendon-ID	Girder-f'ci ksi	Girder-f'c ksi	Deck-f'c ksi
Span:1, Beam:1	1/2-270K-LL	4.50	6.50	4.50
Span:1, Beam:2	1/2-270K-LL	4.50	6.50	4.50
Span:1, Beam:3	1/2-270K-LL	4.50	6.50	4.50
Span:1, Beam:4	1/2-270K-LL	4.50	6.50	4.50
Span:2, Beam:1	1/2-270K-LL	4.50	6.50	4.50
Span:2, Beam:2	1/2-270K-LL	4.50	6.50	4.50
Span:2, Beam:3	1/2-270K-LL	4.50	6.50	4.50
Span:2, Beam:4	1/2-270K-LL	4.50	6.50	4.50

Span:1, Beam:1

PRESTRESSED STEEL:

36 strands, 1/2-270K-LL, Low relaxation strands

Straight Pattern

END PATTERN (Ycg = 4.89 in):

13 @ 3.000 in	13 @ 5.000 in	9 @ 7.000 in	1 @ 9.000 in

REINFORCING STEEL:

Tension	steel:	
fy	60.0	ksi
Es	29000	ksi

Stirrups:

# legs	Size	fy (ksi)	Area (in2)	Spacing (in)	Start (ft)	End (ft)	Extends into Deck
2	US#4[M13]	60.0	0.40	3.00	0.2083	1.7083	Yes
2	US#4[M13]	60.0	0.40	6.00	1.7083	5.7083	Yes
1	US#4[M13]	60.0	0.20	4.00	5.7083	15.0417	Yes
1	US#4[M13]	60.0	0.20	6.00	15.0417	20.0417	Yes
1	US#4[M13]	60.0	0.20	10.00	20.0417	71.9583	Yes
1	US#4[M13]	60.0	0.20	6.00	71.9583	76.9583	Yes
1	US#4[M13]	60.0	0.20	4.00	76.9583	86.2917	Yes
2	US#4[M13]	60.0	0.40	6.00	86.2917	90.2917	Yes
2	US#4[M13]	60.0	0.40	3.00	90.2917	91.7917	Yes

Span:1, Beam:2

PRESTRESSED STEEL:
36 strands, 1/2-270K-LL, Low relaxation strands
Straight Pattern

END PATTERN (Ycg = 4.89 in):

13 @ 3.000 in	13 @ 5.000 in	9 @ 7.000 in	1 @ 9.000 in

REINFORCING STEEL:

Tension	steel:	
fy	60.0	ksi
Es	29000	ksi

Stirrups:

# legs	Size	fy (ksi)	Area (in2)	Spacing (in)	Start (ft)	End (ft)	Extends into Deck
2	US#4[M13]	60.0	0.40	3.00	0.2083	1.7083	Yes
2	US#4[M13]	60.0	0.40	6.00	1.7083	5.7083	Yes
1	US#4[M13]	60.0	0.20	4.00	5.7083	15.0417	Yes
1	US#4[M13]	60.0	0.20	6.00	15.0417	20.0417	Yes
1	US#4[M13]	60.0	0.20	10.00	20.0417	71.9583	Yes
1	US#4[M13]	60.0	0.20	6.00	71.9583	76.9583	Yes
1	US#4[M13]	60.0	0.20	4.00	76.9583	86.2917	Yes
2	US#4[M13]	60.0	0.40	6.00	86.2917	90.2917	Yes
2	US#4[M13]	60.0	0.40	3.00	90.2917	91.7917	Yes

Span:1, Beam:3

PRESTRESSED STEEL:
36 strands, 1/2-270K-LL, Low relaxation strands
Straight Pattern

END PATTERN (Ycg = 4.89 in):

13 @ 3.000 in	13 @ 5.000 in	9 @ 7.000 in	1 @ 9.000 in

REINFORCING STEEL:

Tension	steel:	
fy	60.0	ksi
Es	29000	ksi

Stirrups:

# legs	Size	fy (ksi)	Area (in2)	Spacing (in)	Start (ft)	End (ft)	Extends into Deck
2	US#4[M13]	60.0	0.40	3.00	0.2083	1.7083	Yes
2	US#4[M13]	60.0	0.40	6.00	1.7083	5.7083	Yes
1	US#4[M13]	60.0	0.20	4.00	5.7083	15.0417	Yes
1	US#4[M13]	60.0	0.20	6.00	15.0417	20.0417	Yes
1	US#4[M13]	60.0	0.20	10.00	20.0417	71.9583	Yes
1	US#4[M13]	60.0	0.20	6.00	71.9583	76.9583	Yes
1	US#4[M13]	60.0	0.20	4.00	76.9583	86.2917	Yes
2	US#4[M13]	60.0	0.40	6.00	86.2917	90.2917	Yes
2	US#4[M13]	60.0	0.40	3.00	90.2917	91.7917	Yes

Span:1, Beam:4

PRESTRESSED STEEL:
36 strands, 1/2-270K-LL, Low relaxation strands
Straight Pattern

END PATTERN (Ycg = 4.89 in):

13 @ 3.000 in	13 @ 5.000 in	9 @ 7.000 in	1 @ 9.000 in

REINFORCING STEEL:

Tension	steel:	
fy	60.0	ksi
Es	29000	ksi

Stirrups:

# legs	Size	fy (ksi)	Area (in2)	Spacing (in)	Start (ft)	End (ft)	Extends into Deck
2	US#4[M13]	60.0	0.40	3.00	0.2083	1.7083	Yes
2	US#4[M13]	60.0	0.40	6.00	1.7083	5.7083	Yes
1	US#4[M13]	60.0	0.20	4.00	5.7083	15.0417	Yes
1	US#4[M13]	60.0	0.20	6.00	15.0417	20.0417	Yes
1	US#4[M13]	60.0	0.20	10.00	20.0417	71.9583	Yes
1	US#4[M13]	60.0	0.20	6.00	71.9583	76.9583	Yes
1	US#4[M13]	60.0	0.20	4.00	76.9583	86.2917	Yes
2	US#4[M13]	60.0	0.40	6.00	86.2917	90.2917	Yes
2	US#4[M13]	60.0	0.40	3.00	90.2917	91.7917	Yes

Span:2, Beam:1

PRESTRESSED STEEL:
36 strands, 1/2-270K-LL, Low relaxation strands
Straight Pattern

END PATTERN (Ycg = 4.89 in):

13 @ 3.000 in	13 @ 5.000 in	9 @ 7.000 in	1 @ 9.000 in

REINFORCING STEEL:

Tension	steel:	
fy	60.0	ksi
Es	29000	ksi

Stirrups:

# legs	Size	fy (ksi)	Area (in2)	Spacing (in)	Start (ft)	End (ft)	Extends into Deck
2	US#4[M13]	60.0	0.40	3.00	0.2083	1.7083	Yes
2	US#4[M13]	60.0	0.40	6.00	1.7083	5.7083	Yes
1	US#4[M13]	60.0	0.20	4.00	5.7083	15.0417	Yes
1	US#4[M13]	60.0	0.20	6.00	15.0417	20.0417	Yes
1	US#4[M13]	60.0	0.20	10.00	20.0417	71.9583	Yes
1	US#4[M13]	60.0	0.20	6.00	71.9583	76.9583	Yes
1	US#4[M13]	60.0	0.20	4.00	76.9583	86.2917	Yes
2	US#4[M13]	60.0	0.40	6.00	86.2917	90.2917	Yes
2	US#4[M13]	60.0	0.40	3.00	90.2917	91.7917	Yes

Span:2, Beam:2

PRESTRESSED STEEL:
36 strands, 1/2-270K-LL, Low relaxation strands
Straight Pattern

END PATTERN (Ycg = 4.89 in):

13 @ 3.000 in	13 @ 5.000 in	9 @ 7.000 in	1 @ 9.000 in

REINFORCING STEEL:

Tension	steel:	
fy	60.0	ksi
Es	29000	ksi

Stirrups:

# legs	Size	fy (ksi)	Area (in2)	Spacing (in)	Start (ft)	End (ft)	Extends into Deck
2	US#4[M13]	60.0	0.40	3.00	0.2083	1.7083	Yes
2	US#4[M13]	60.0	0.40	6.00	1.7083	5.7083	Yes
1	US#4[M13]	60.0	0.20	4.00	5.7083	15.0417	Yes
1	US#4[M13]	60.0	0.20	6.00	15.0417	20.0417	Yes
1	US#4[M13]	60.0	0.20	10.00	20.0417	71.9583	Yes
1	US#4[M13]	60.0	0.20	6.00	71.9583	76.9583	Yes
1	US#4[M13]	60.0	0.20	4.00	76.9583	86.2917	Yes
2	US#4[M13]	60.0	0.40	6.00	86.2917	90.2917	Yes
2	US#4[M13]	60.0	0.40	3.00	90.2917	91.7917	Yes

Span:2, Beam:3

PRESTRESSED STEEL:
36 strands, 1/2-270K-LL, Low relaxation strands
Straight Pattern

END PATTERN (Ycg = 4.89 in):

13 @ 3.000 in	13 @ 5.000 in	9 @ 7.000 in	1 @ 9.000 in

REINFORCING STEEL:

Tension	steel:	
fy	60.0	ksi
Es	29000	ksi

Stirrups:

# legs	Size	fy (ksi)	Area (in2)	Spacing (in)	Start (ft)	End (ft)	Extends into Deck
2	US#4[M13]	60.0	0.40	3.00	0.2083	1.7083	Yes
2	US#4[M13]	60.0	0.40	6.00	1.7083	5.7083	Yes
1	US#4[M13]	60.0	0.20	4.00	5.7083	15.0417	Yes
1	US#4[M13]	60.0	0.20	6.00	15.0417	20.0417	Yes
1	US#4[M13]	60.0	0.20	10.00	20.0417	71.9583	Yes
1	US#4[M13]	60.0	0.20	6.00	71.9583	76.9583	Yes
1	US#4[M13]	60.0	0.20	4.00	76.9583	86.2917	Yes
2	US#4[M13]	60.0	0.40	6.00	86.2917	90.2917	Yes
2	US#4[M13]	60.0	0.40	3.00	90.2917	91.7917	Yes

Span:2, Beam:4

PRESTRESSED STEEL:
36 strands, 1/2-270K-LL, Low relaxation strands
Straight Pattern

END PATTERN (Ycg = 4.89 in):

13 @ 3.000 in	13 @ 5.000 in	9 @ 7.000 in	1 @ 9.000 in

REINFORCING STEEL:

Tension	steel:	
fy	60.0	ksi
Es	29000	ksi

Stirrups:

# legs	Size	fy (ksi)	Area (in2)	Spacing (in)	Start (ft)	End (ft)	Extends into Deck
2	US#4[M13]	60.0	0.40	3.00	0.2083	1.7083	Yes
2	US#4[M13]	60.0	0.40	6.00	1.7083	5.7083	Yes
1	US#4[M13]	60.0	0.20	4.00	5.7083	15.0417	Yes
1	US#4[M13]	60.0	0.20	6.00	15.0417	20.0417	Yes
1	US#4[M13]	60.0	0.20	10.00	20.0417	71.9583	Yes
1	US#4[M13]	60.0	0.20	6.00	71.9583	76.9583	Yes
1	US#4[M13]	60.0	0.20	4.00	76.9583	86.2917	Yes
2	US#4[M13]	60.0	0.40	6.00	86.2917	90.2917	Yes
2	US#4[M13]	60.0	0.40	3.00	90.2917	91.7917	Yes

b. LEAP Concrete Bridge Output – Span 1 and 2

Bentley				Sheet #	1
				Job #	
Program:	LEAP® Bridge Concrete CONNECT Edition	BASE Consultants		Designed	KV
Module:	Precast/Prestressed Girder	Copyright © Bentley Systems, Inc. 2021		Date	Jan/7/2021
Version:	21.00.00.24	www.bentley.com	Phone: 1-800-778-4277	Checked	RK
File Name:	**Span-1-2WB(5ft).lbcx**			Date	Jan/7/2021

CONSOLIDATED FDOT RATING REPORT

Load Rating Summary for Prestressed Concrete Bridges

All Bridge

Design Load Rating - Summary

Limit State	Vehicle	Weight (tons)	LF LL	LF DC	LF DW	Moment DF	Mom or Str RF	Mom or Str Tons	Mom or Str Location	Mom or Str Dim	Controlling Span/Beam	Shear DF	Shear RF	Shear Tons	Shear Location	Shear Dim	Controlling Span/Beam
Strength I (Inv)	HL93 Design Load	-	1.75	1.25	1.50	1.15	1.48	-	0.4L	36.30	1/4	1.11	1.42	-	Critical	84.62	1/2
Strength I (Op)	HL93 Design Load	-	1.35	1.25	1.50	1.15	1.92	-	0.4L	36.30	1/4	1.11	1.84	-	Critical	84.62	1/2
Service III (Inv)	HL93 Design Load	-	0.80	1.00	1.00	1.15	1.73	-	0.5L	45.50	1/4	-	-	-	-	-	-
Service III (Op)	HL93 Design Load	-	0.80	1.00	1.00	1.15	1.73	-	0.5L	45.50	1/4	-	-	-	-	-	-

Bentley				Sheet #	2
				Job #	
Program:	LEAP® Bridge Concrete CONNECT Edition	BASE Consultants		Designed	KV
Module:	Precast/Prestressed Girder	Copyright © Bentley Systems, Inc. 2021		Date	Jan/7/2021
Version:	21.00.00.24	www.bentley.com	Phone: 1-800-778-4277	Checked	RK
File Name:	**Span-1-2WB(5ft).lbcx**			Date	Jan/7/2021

Design Load Rating

Span	Beam	Limit State	Vehicle	Weight (tons)	LF LL	LF DC	LF DW	Moment DF	Mom or Str RF	Mom or Str Tons	Mom or Str Location	Mom or Str Dim	Shear DF	Shear RF	Shear Tons	Shear Location	Shear Dim
1	1	Strength I (Inv)	HL93 Design Load	-	1.75	1.25	1.50	1.06	1.63	-	0.4L	36.30	1.01	1.59	-	Critical	84.64
1	1	Strength I (Op)	HL93 Design Load	-	1.35	1.25	1.50	1.06	2.11	-	0.4L	36.30	1.01	2.07	-	Critical	84.64
1	1	Service III (Inv)	HL93 Design Load	-	0.80	1.00	1.00	1.06	1.92	-	0.5L	45.50	-	-	-	-	-
1	1	Service III (Op)	HL93 Design Load	-	0.80	1.00	1.00	1.06	1.92	-	0.5L	45.50	-	-	-	-	-
1	2	Strength I (Inv)	HL93 Design Load	-	1.75	1.25	1.50	0.97	1.74	-	0.4L	36.30	1.11	1.42	-	Critical	84.62
1	2	Strength I (Op)	HL93 Design Load	-	1.35	1.25	1.50	0.97	2.26	-	0.4L	36.30	1.11	1.84	-	Critical	84.62
1	2	Service III (Inv)	HL93 Design Load	-	0.80	1.00	1.00	0.97	1.99	-	0.5L	45.50	-	-	-	-	-
1	2	Service III (Op)	HL93 Design Load	-	0.80	1.00	1.00	0.97	1.99	-	0.5L	45.50	-	-	-	-	-
1	3	Strength I (Inv)	HL93 Design Load	-	1.75	1.25	1.50	0.97	1.74	-	0.4L	36.30	1.11	1.42	-	Critical	84.62
1	3	Strength I (Op)	HL93 Design Load	-	1.35	1.25	1.50	0.97	2.26	-	0.4L	36.30	1.11	1.84	-	Critical	84.62
1	3	Service III (Inv)	HL93 Design Load	-	0.80	1.00	1.00	0.97	1.99	-	0.5L	45.50	-	-	-	-	-
1	3	Service III (Op)	HL93 Design Load	-	0.80	1.00	1.00	0.97	1.99	-	0.5L	45.50	-	-	-	-	-
1	4	Strength I (Inv)	HL93 Design Load	-	1.75	1.25	1.50	1.15	1.48	-	0.4L	36.30	1.09	1.45	-	Critical	84.64
1	4	Strength I (Op)	HL93 Design Load	-	1.35	1.25	1.50	1.15	1.92	-	0.4L	36.30	1.09	1.88	-	Critical	84.64

Bentley				Sheet #	3
				Job #	
Program:	LEAP® Bridge Concrete CONNECT Edition	BASE Consultants		Designed	KV
Module:	Precast/Prestressed Girder	Copyright © Bentley Systems, Inc. 2021		Date	Jan/7/2021
Version:	21.00.00.24	www.bentley.com	Phone: 1-800-778-4277	Checked	RK
File Name:	**Span-1-2WB(5ft).lbcx**			Date	Jan/7/2021

Span	Beam	Limit State	Vehicle	Weight (tons)	LF LL	LF DC	LF DW	Moment DF	Mom or Str RF	Mom or Str Tons	Mom or Str Location	Mom or Str Dim	Shear DF	Shear RF	Shear Tons	Shear Location	Shear Dim
1	4	Service III (Inv)	HL93 Design Load	-	0.80	1.00	1.00	1.15	1.73	-	0.5L	45.50	-	-	-	-	-
1	4	Service III (Op)	HL93 Design Load	-	0.80	1.00	1.00	1.15	1.73	-	0.5L	45.50	-	-	-	-	-
2	1	Strength I (Inv)	HL93 Design Load	-	1.75	1.25	1.50	1.06	1.63	-	0.6L	54.70	1.01	1.60	-	Critical	6.43
2	1	Strength I (Op)	HL93 Design Load	-	1.35	1.25	1.50	1.06	2.11	-	0.6L	54.70	1.01	2.08	-	Critical	6.43
2	1	Service III (Inv)	HL93 Design Load	-	0.80	1.00	1.00	1.06	1.92	-	0.5L	45.50	-	-	-	-	-
2	1	Service III (Op)	HL93 Design Load	-	0.80	1.00	1.00	1.06	1.92	-	0.5L	45.50	-	-	-	-	-
2	2	Strength I (Inv)	HL93 Design Load	-	1.75	1.25	1.50	0.97	1.74	-	0.6L	54.70	1.10	1.43	-	Critical	6.44
2	2	Strength I (Op)	HL93 Design Load	-	1.35	1.25	1.50	0.97	2.26	-	0.6L	54.70	1.10	1.85	-	Critical	6.44
2	2	Service III (Inv)	HL93 Design Load	-	0.80	1.00	1.00	0.97	1.99	-	0.5L	45.50	-	-	-	-	-
2	2	Service III (Op)	HL93 Design Load	-	0.80	1.00	1.00	0.97	1.99	-	0.5L	45.50	-	-	-	-	-
2	3	Strength I (Inv)	HL93 Design Load	-	1.75	1.25	1.50	0.97	1.74	-	0.6L	54.70	1.10	1.43	-	Critical	6.44
2	3	Strength I (Op)	HL93 Design Load	-	1.35	1.25	1.50	0.97	2.26	-	0.6L	54.70	1.10	1.85	-	Critical	6.44
2	3	Service III (Inv)	HL93 Design Load	-	0.80	1.00	1.00	0.97	1.99	-	0.5L	45.50	-	-	-	-	-
2	3	Service III (Op)	HL93 Design Load	-	0.80	1.00	1.00	0.97	1.99	-	0.5L	45.50	-	-	-	-	-
2	4	Strength I	HL93 Design	-	1.75	1.25	1.50	1.15	1.48	-	0.6L	54.70	1.09	1.46	-	Critical	6.43

Bentley				Sheet #	4
				Job #	
Program:	LEAP® Bridge Concrete CONNECT Edition	BASE Consultants		Designed	KV
Module:	Precast/Prestressed Girder	Copyright © Bentley Systems, Inc. 2021		Date	Jan/7/2021
Version:	21.00.00.24	www.bentley.com	Phone: 1-800-778-4277	Checked	RK
File Name:	**Span-1-2WB(5ft).lbcx**			Date	Jan/7/2021

Span	Beam	Limit State	Vehicle	Weight (tons)	LF LL	LF DC	LF DW	Moment DF	Mom or Str RF	Mom or Str Tons	Mom or Str Location	Mom or Str Dim	Shear DF	Shear RF	Shear Tons	Shear Location	Shear Dim
2	4	(Inv) Strength I (Op)	Load HL93 Design Load	-	1.35	1.25	1.50	1.15	1.92	-	0.6L	54.70	1.09	1.89	-	Critical	6.43
2	4	Service III (Inv)	HL93 Design Load	-	0.80	1.00	1.00	1.15	1.73	-	0.5L	45.50	-	-	-	-	-
2	4	Service III (Op)	HL93 Design Load	-	0.80	1.00	1.00	1.15	1.73	-	0.5L	45.50	-	-	-	-	-

Permit Load Rating - Summary

Limit State	Vehicle	Weight (tons)	LF LL	LF DC	LF DW	Moment DF	Mom or Str RF	Mom or Str Tons	Mom or Str Location	Mom or Str Dim	Controlling Span/Beam	Shear DF	Shear RF	Shear Tons	Shear Location	Shear Dim	Controlling Span/Beam
Strength II	FL120	60.00	1.30	1.25	1.50	1.15	1.62	97.01	0.4L	36.30	1/4	1.09	1.49	89.40	0.3L	27.10	1/4
Service I	FL120	60.00	1.00	1.00	1.00	1.15	1.92	115.37	0.5L	45.50	1/4	-	-	-	-	-	-

Bentley				Sheet #	5
				Job #	
Program:	LEAP® Bridge Concrete CONNECT Edition	BASE Consultants		Designed	KV
Module:	Precast/Prestressed Girder	Copyright © Bentley Systems, Inc. 2021		Date	Jan/7/2021
Version:	21.00.00.24	www.bentley.com	Phone: 1-800-778-4277	Checked	RK
File Name:	**Span-1-2WB(5ft).lbcx**			Date	Jan/7/2021

Permit Load Rating

Span	Beam	Limit State	Vehicle	Weight (tons)	LF LL	LF DC	LF DW	Moment DF	Mom or Str RF	Mom or Str Tons	Mom or Str Location	Mom or Str Dim	Shear DF	Shear RF	Shear Tons	Shear Location	Shear Dim
1	1	Strength II	FL120	60.00	1.30	1.25	1.50	1.06	1.77	106.31	0.4L	36.30	1.01	1.89	113.41	0.7L	63.90
1	1	Service I	FL120	60.00	1.00	1.00	1.00	1.06	2.09	125.23	0.5L	45.50	-	-	-	-	-
1	2	Strength II	FL120	60.00	1.30	1.25	1.50	0.97	1.90	113.88	0.4L	36.30	1.11	1.70	101.84	0.7L	63.90
1	2	Service I	FL120	60.00	1.00	1.00	1.00	0.97	2.12	127.46	0.5L	45.50	-	-	-	-	-
1	3	Strength II	FL120	60.00	1.30	1.25	1.50	0.97	1.90	113.88	0.4L	36.30	1.11	1.70	101.84	0.7L	63.90
1	3	Service I	FL120	60.00	1.00	1.00	1.00	0.97	2.12	127.46	0.5L	45.50	-	-	-	-	-
1	4	Strength II	FL120	60.00	1.30	1.25	1.50	1.15	1.62	97.01	0.4L	36.30	1.09	1.49	89.40	0.3L	27.10
1	4	Service I	FL120	60.00	1.00	1.00	1.00	1.15	1.92	115.37	0.5L	45.50	-	-	-	-	-
2	1	Strength II	FL120	60.00	1.30	1.25	1.50	1.06	1.77	106.31	0.6L	54.70	1.01	1.81	108.72	0.3L	27.10
2	1	Service I	FL120	60.00	1.00	1.00	1.00	1.06	2.09	125.23	0.5L	45.50	-	-	-	-	-
2	2	Strength II	FL120	60.00	1.30	1.25	1.50	0.97	1.90	113.88	0.6L	54.70	1.10	1.63	97.57	0.3L	27.10
2	2	Service I	FL120	60.00	1.00	1.00	1.00	0.97	2.12	127.46	0.5L	45.50	-	-	-	-	-
2	3	Strength II	FL120	60.00	1.30	1.25	1.50	0.97	1.90	113.88	0.6L	54.70	1.10	1.63	97.57	0.3L	27.10
2	3	Service I	FL120	60.00	1.00	1.00	1.00	0.97	2.12	127.46	0.5L	45.50	-	-	-	-	-
2	4	Strength II	FL120	60.00	1.30	1.25	1.50	1.15	1.62	97.01	0.6L	54.70	1.09	1.49	89.53	0.7L	63.90
2	4	Service I	FL120	60.00	1.00	1.00	1.00	1.15	1.92	115.37	0.5L	45.50	-	-	-	-	-

c. LEAP Steel Bridge Input – Span 3

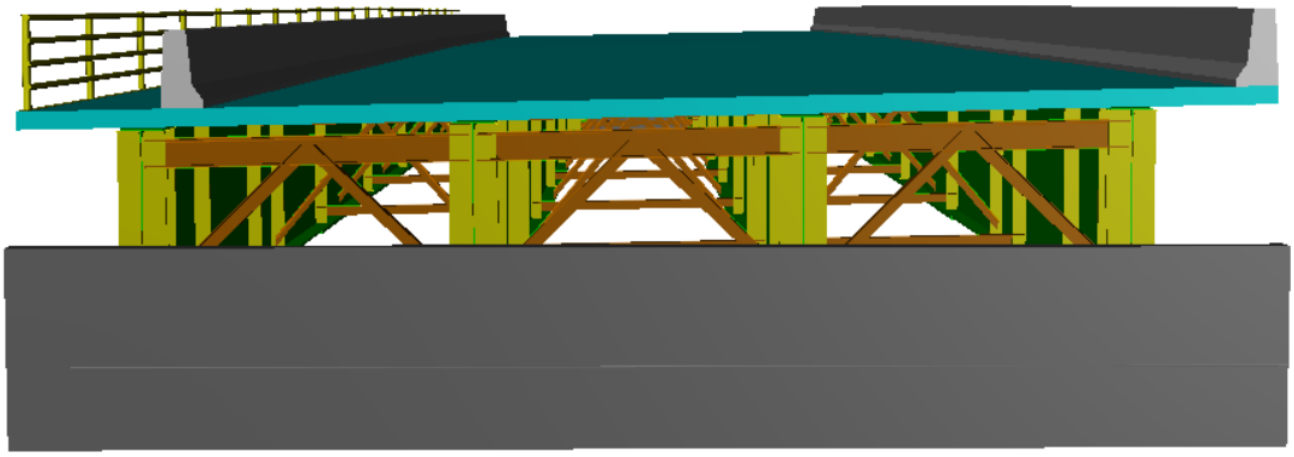

Bridge 1

Roadway Elements

Alignments

Alignment Name: ALG01
Begin Station: 35+85.0000
Coordinate Tie:
Northing: 0.0000
Easting: 0.0000

Segment	Shape	Start Direction	Radius (ft)	End Station	Spiral In (ft)	Spiral Out (ft)	Sense
1	Tangent	N 0 00 00.00 W		37+95.0000			

Profiles

Profile Name: PROF01

VPI	Station	Elevation	Transition	LVC-1 (ft)	LVC-2 (ft)
1	33+50.0000	76.6670			
2	37+00.0000	79.0000	Parabola	150.0000	150.0000
3	42+00.0000	75.2500			

Cross Sections

Cross Section Name: XSECT01

Template Name: TMPL 0
Template Station: 0+00.0000
PG Offset: 0.0000
PG Node: 2

Plane	Width Type	Width (ft)	Vertical Type	Vertical %
1	Distance	22.9200	Slope	2.0000
2	Distance	22.9200	Slope	2.0000

Roadways

No.	Name	Align	Profile	Cross Section	Min. Station	Max. Station
1	RDWY01	ALG01	PROF01	XSECT01	35+85.0000	37+95.0000

Superstructure

Pier/Abutment Locations

Roadway: RDWY01

Offset to Bridge CL: 0.0000 ft

No.	Type	Name	Input Method	Station/Distance(ft)	Skew/Bearing
1	Abutment	Support 01	Station	35+85.0000	NORMAL
2	Abutment	Support 02	Station	37+95.0000	NORMAL

Deck Slab

Deck Thickness: 8.0000 in

Haunch Thickness: 3.0000 in

Sacrificial Wearing Surface: 0.0000 in

No.	Name	Material	Ref. Back	Ref. Method	Offset/Station	Ref. Ahead	Ref. Method	Offset/Station
1	Slab 01	NONE	Support 01	Along Alignment	0.000000	Support 02	Along Alignment	0.000000

Member Groups

Member Group Name: Group01

Back Reference: Support 01

Ahead Reference: Support 02

Number of Members: 4

Path: Concentric to align.

Back Location

Left Fascia Member

Reference: Left edge of slab

Direction: Along support

Offset(ft): 4.5100

Interior Members

Spacing Type: Equally spaced

Spacing(ft): 12.0000

Right Fascia Member

Reference: Right edge of slab

Direction: Along support

Offset(ft): 5.3300

Ahead Location

Left Fascia Member

Reference: Left edge of slab

Direction: Along support

Offset(ft): 0.0000

Interior Members

Spacing Type: Equally spaced

Spacing(ft): 12.0000

Right Fascia Member

Reference: Right edge of slab

Direction: Along support

Offset(ft): 0.0000

Member Definition

Member Group: Group01

Member 01:

WEB	No.	Ref. Span	Start (ft)	Length (ft)	Material	Thick (in)	Start Height (in)	Variation	End Height (in)
	1	1	0.0000	42.0000	Grade 50W	0.6250	93.0000	None	93.0000
	2	1	42.0000	126.0000	Grade 50W	0.6250	93.0000	None	93.0000
	3	1	168.0000	42.0000	Grade 50W	0.6250	93.0000	None	93.0000
Top Flange	**No.**	**Ref. Span**	**Start (ft)**	**Length (ft)**	**Material**	**Thick (in)**	**Start Width (in)**	**Variation**	**End Width (in)**
	1	1	0.0000	42.0000	Grade 50W	0.8750	18.5000	None	18.5000
	2	1	42.0000	126.0000	Grade 50W	1.4375	20.5000	None	20.5000
	3	1	168.0000	42.0000	Grade 50W	0.8750	18.5000	None	18.5000
Bottom Flange	**No.**	**Ref. Span**	**Start (ft)**	**Length (ft)**	**Material**	**Thick (in)**	**Start Width (in)**	**Variation**	**End Width (in)**

Date:	8/2/2021	Span3-5ft-WB.lbsx	
Time:	1:47 PM	Bentley LEAP Bridge Steel [AASHTO LRFD 8th Ed. with 2017 Interims]	v21.00.00.28

Bottom Flange	No.	Ref. Span	Start (ft)	Length (ft)	Material	Thick (in)	Start Width (in)	Variation	End Width (in)
	1	1	0.0000	26.0000	Grade 50W	0.7500	20.0000	None	20.0000
	2	1	26.0000	16.0000	Grade 50W	1.3750	20.0000	None	20.0000
	3	1	42.0000	126.0000	Grade 50W	2.2500	22.0000	None	22.0000
	4	1	168.0000	16.0000	Grade 50W	1.3750	20.0000	None	20.0000
	5	1	184.0000	26.0000	Grade 50W	0.7500	20.0000	None	20.0000

Member 02:

WEB	No.	Ref. Span	Start (ft)	Length (ft)	Material	Thick (in)	Start Height (in)	Variation	End Height (in)
	1	1	0.0000	42.0000	Grade 50W	0.6250	93.0000	None	93.0000
	2	1	42.0000	126.0000	Grade 50W	0.6250	93.0000	None	93.0000
	3	1	168.0000	42.0000	Grade 50W	0.6250	93.0000	None	93.0000
Top Flange	**No.**	**Ref. Span**	**Start (ft)**	**Length (ft)**	**Material**	**Thick (in)**	**Start Width (in)**	**Variation**	**End Width (in)**
	1	1	0.0000	42.0000	Grade 50W	0.8750	18.5000	None	18.5000
	2	1	42.0000	126.0000	Grade 50W	1.4375	20.5000	None	20.5000
	3	1	168.0000	42.0000	Grade 50W	0.8750	18.5000	None	18.5000
Bottom Flange	**No.**	**Ref. Span**	**Start (ft)**	**Length (ft)**	**Material**	**Thick (in)**	**Start Width (in)**	**Variation**	**End Width (in)**
	1	1	0.0000	26.0000	Grade 50W	0.7500	20.0000	None	20.0000
	2	1	26.0000	16.0000	Grade 50W	1.3750	20.0000	None	20.0000
	3	1	42.0000	126.0000	Grade 50W	2.2500	22.0000	None	22.0000

Bottom Flange	No.	Ref. Span	Start (ft)	Length (ft)	Material	Thick (in)	Start Width (in)	Variation	End Width (in)
	4	1	168.0000	16.0000	Grade 50W	1.3750	20.0000	None	20.0000
	5	1	184.0000	26.0000	Grade 50W	0.7500	20.0000	None	20.0000

Member 03:

WEB	No.	Ref. Span	Start (ft)	Length (ft)	Material	Thick (in)	Start Height (in)	Variation	End Height (in)
	1	1	0.0000	42.0000	Grade 50W	0.6250	93.0000	None	93.0000
	2	1	42.0000	126.0000	Grade 50W	0.6250	93.0000	None	93.0000
	3	1	168.0000	42.0000	Grade 50W	0.6250	93.0000	None	93.0000
Top Flange	**No.**	**Ref. Span**	**Start (ft)**	**Length (ft)**	**Material**	**Thick (in)**	**Start Width (in)**	**Variation**	**End Width (in)**
	1	1	0.0000	42.0000	Grade 50W	0.8750	18.5000	None	18.5000
	2	1	42.0000	126.0000	Grade 50W	1.4375	20.5000	None	20.5000
	3	1	168.0000	42.0000	Grade 50W	0.8750	18.5000	None	18.5000
Bottom Flange	**No.**	**Ref. Span**	**Start (ft)**	**Length (ft)**	**Material**	**Thick (in)**	**Start Width (in)**	**Variation**	**End Width (in)**
	1	1	0.0000	26.0000	Grade 50W	0.7500	20.0000	None	20.0000
	2	1	26.0000	16.0000	Grade 50W	1.3750	20.0000	None	20.0000
	3	1	42.0000	126.0000	Grade 50W	2.2500	22.0000	None	22.0000
	4	1	168.0000	16.0000	Grade 50W	1.3750	20.0000	None	20.0000
	5	1	184.0000	26.0000	Grade 50W	0.7500	20.0000	None	20.0000

Member 04:

Date:	8/2/2021	Span3-5ft-WB.lbsx	
Time:	1:47 PM	Bentley LEAP Bridge Steel [AASHTO LRFD 8th Ed. with 2017 Interims]	v21.00.00.28

WEB	No.	Ref. Span	Start (ft)	Length (ft)	Material	Thick (in)	Start Height (in)	Variation	End Height (in)
	1	1	0.0000	42.0000	Grade 50W	0.6250	93.0000	None	93.0000
	2	1	42.0000	126.0000	Grade 50W	0.6250	93.0000	None	93.0000
	3	1	168.0000	42.0000	Grade 50W	0.6250	93.0000	None	93.0000
Top Flange	**No.**	**Ref. Span**	**Start (ft)**	**Length (ft)**	**Material**	**Thick (in)**	**Start Width (in)**	**Variation**	**End Width (in)**
	1	1	0.0000	42.0000	Grade 50W	0.8750	18.5000	None	18.5000
	2	1	42.0000	126.0000	Grade 50W	1.4375	20.5000	None	20.5000
	3	1	168.0000	42.0000	Grade 50W	0.8750	18.5000	None	18.5000
Bottom Flange	**No.**	**Ref. Span**	**Start (ft)**	**Length (ft)**	**Material**	**Thick (in)**	**Start Width (in)**	**Variation**	**End Width (in)**
	1	1	0.0000	26.0000	Grade 50W	0.7500	20.0000	None	20.0000
	2	1	26.0000	16.0000	Grade 50W	1.3750	20.0000	None	20.0000
	3	1	42.0000	126.0000	Grade 50W	2.2500	22.0000	None	22.0000
	4	1	168.0000	16.0000	Grade 50W	1.3750	20.0000	None	20.0000
	5	1	184.0000	26.0000	Grade 50W	0.7500	20.0000	None	20.0000

Cross-frame/Diaphragm Definition

Frame Name: END DIA

Frame Type: Frame Inverted V

Top Strut

Enabled:	Yes
Top Left Distance (in):	10.000000
Top Right Distance (in):	10.000000
Begin Offset (in):	1.500000
End Offset (in):	1.500000
Section:	MC12X45
Double Section:	No
Gap Between Sections (in):	0
Material:	Grade 50
Center Line Reference:	Middle
Vertical Orientation:	Channel back vertical
Horizontal Orientation:	N/A

Bottom Strut

Enabled:	Yes
Bottom Left Distance (in):	8.000000
Bottom Right Distance (in):	8.000000
Begin Offset (in):	1.500000
End Offset (in):	1.500000
Section:	L8X8X1/2
Double Section:	No
Gap Between Sections (in):	0
Material:	Grade 50
Center Line Reference:	Middle
Vertical Orientation:	Long leg vertical
Horizontal Orientation:	N/A

Left Diagonal

Bottom Left Distance (in):	15.000000
Top Right Distance (in):	10.000000
Begin Offset (in):	3.000000
End Offset (in):	3.000000
Section:	L8X8X1/2
Double Section:	No
Gap Between Sections (in):	0
Material:	Grade 50
Center Line Reference:	Middle
Vertical Orientation:	Long leg vertical
Horizontal Orientation:	N/A

Right Diagonal

Top Left Distance (in):	10.000000
Bottom Right Distance (in):	15.000000
Begin Offset (in):	3.000000
End Offset (in):	3.000000
Section:	L8X8X1/2
Double Section:	No
Gap Between Sections (in):	0
Material:	Grade 50
Center Line Reference:	Middle
Vertical Orientation:	Long leg vertical
Horizontal Orientation:	N/A

Frame Name: CROSS FRAME

Frame Type: Frame Inverted V

Top Strut

Enabled:	Yes
Top Left Distance (in):	10.000000
Top Right Distance (in):	10.000000
Begin Offset (in):	1.500000
End Offset (in):	1.500000
Section:	L6X6X3/8
Double Section:	No
Gap Between Sections (in):	0
Material:	Grade 50
Center Line Reference:	Middle
Vertical Orientation:	Long leg vertical
Horizontal Orientation:	N/A

Bottom Strut

Enabled:	Yes
Bottom Left Distance (in):	8.000000
Bottom Right Distance (in):	8.000000
Begin Offset (in):	1.500000
End Offset (in):	1.500000
Section:	L6X6X3/8
Double Section:	No
Gap Between Sections (in):	0
Material:	Grade 50
Center Line Reference:	Middle
Vertical Orientation:	Long leg vertical
Horizontal Orientation:	N/A

Left Diagonal

Bottom Left Distance (in): -3.000000

Top Right Distance (in): 0.000000

Begin Offset (in): 16.000000

End Offset (in): 0.000000

Section: L6X6X3/8

Double Section: No

Gap Between Sections (in): 0

Material: Grade 50

Center Line Reference: Middle

Vertical Orientation: Long leg vertical

Horizontal Orientation: N/A

Right Diagonal

Top Left Distance (in): 0.000000

Bottom Right Distance (in): -3.000000

Begin Offset (in): 0.000000

End Offset (in): 16.000000

Section: L6X6X3/8

Double Section: No

Gap Between Sections (in): 0

Material: Grade 50

Center Line Reference: Middle

Vertical Orientation: Long leg vertical

Horizontal Orientation: N/A

Cross-frame/Diaphragm Location

Member Group:

Bay 01

No.	Location Type	Left Location	Right Location	Link Left-Right	Cross-Frame/ Diaphragm	CFD Orientation	Connection Type	Permanent/ Temporary
1	Relative	0.0000	0.0000	Yes	END DIA	Upstation	Welded	Permanent
2	Relative	1.0000	1.0000	Yes	END DIA	Upstation	Welded	Permanent
3	Absolute (ft)	23.0000	23.0000	Yes	CROSS FRAME	Upstation	Welded	Permanent

Bay 01

No.	Location Type	Left Location	Right Location	Link Left-Right	Cross-Frame/ Diaphragm	CFD Orientation	Connection Type	Permanent/ Temporary
4	Absolute (ft)	46.0000	46.0000	Yes	CROSS FRAME	Upstation	Welded	Permanent
5	Absolute (ft)	69.0000	69.0000	Yes	CROSS FRAME	Upstation	Welded	Permanent
6	Absolute (ft)	92.0000	92.0000	Yes	CROSS FRAME	Upstation	Welded	Permanent
7	Absolute (ft)	115.2500	115.2500	Yes	CROSS FRAME	Upstation	Welded	Permanent
8	Absolute (ft)	138.2500	138.2500	Yes	CROSS FRAME	Upstation	Welded	Permanent
9	Absolute (ft)	161.2500	161.2500	Yes	CROSS FRAME	Upstation	Welded	Permanent
10	Absolute (ft)	184.2500	184.2500	Yes	CROSS FRAME	Upstation	Welded	Permanent

Bay 02

No.	Location Type	Left Location	Right Location	Link Left-Right	Cross-Frame/ Diaphragm	CFD Orientation	Connection Type	Permanent/ Temporary
1	Relative	0.0000	0.0000	Yes	END DIA	Upstation	Welded	Permanent
2	Relative	1.0000	1.0000	Yes	END DIA	Upstation	Welded	Permanent
3	Absolute (ft)	23.0000	23.0000	Yes	CROSS FRAME	Upstation	Welded	Permanent
4	Absolute (ft)	46.0000	46.0000	Yes	CROSS FRAME	Upstation	Welded	Permanent
5	Absolute (ft)	69.0000	69.0000	Yes	CROSS FRAME	Upstation	Welded	Permanent
6	Absolute (ft)	92.0000	92.0000	Yes	CROSS FRAME	Upstation	Welded	Permanent
7	Absolute (ft)	115.2500	115.2500	Yes	CROSS FRAME	Upstation	Welded	Permanent
8	Absolute (ft)	138.2500	138.2500	Yes	CROSS FRAME	Upstation	Welded	Permanent
9	Absolute (ft)	161.2500	161.2500	Yes	CROSS FRAME	Upstation	Welded	Permanent
10	Absolute (ft)	184.2500	184.2500	Yes	CROSS FRAME	Upstation	Welded	Permanent

Bay 03

No.	Location Type	Left Location	Right Location	Link Left-Right	Cross-Frame/ Diaphragm	CFD Orientation	Connection Type	Permanent/ Temporary
1	Relative	0.0000	0.0000	Yes	END DIA	Upstation	Welded	Permanent
2	Relative	1.0000	1.0000	Yes	END DIA	Upstation	Welded	Permanent
3	Absolute (ft)	23.0000	23.0000	Yes	CROSS FRAME	Upstation	Welded	Permanent
4	Absolute (ft)	46.0000	46.0000	Yes	CROSS FRAME	Upstation	Welded	Permanent
5	Absolute (ft)	69.0000	69.0000	Yes	CROSS FRAME	Upstation	Welded	Permanent
6	Absolute (ft)	92.0000	92.0000	Yes	CROSS FRAME	Upstation	Welded	Permanent
7	Absolute (ft)	115.2500	115.2500	Yes	CROSS FRAME	Upstation	Welded	Permanent
8	Absolute (ft)	138.2500	138.2500	Yes	CROSS FRAME	Upstation	Welded	Permanent
9	Absolute (ft)	161.2500	161.2500	Yes	CROSS FRAME	Upstation	Welded	Permanent
10	Absolute (ft)	184.2500	184.2500	Yes	CROSS FRAME	Upstation	Welded	Permanent

Stiffener Definition

Cross Frame

Function: Connection plate

Width (in): 7.5000

Thickness (in): 0.6250

Material: Grade 50

Corner Clip:

Top Inner H (in): 1.0000

Top Inner V(in): 3.0000

Top Outer H (in): 0.0000

Top Outer V (in): 0.0000

Bottom Inner H (in): 1.0000

Bottom Inner V(in): 3.0000

Bottom Outer H (in): 0.0000

Bottom Outer V (in): 0.0000

Bearing

Function: Connection plate

Width (in): 9.0000

Thickness (in): 1.0000

Material: Grade 50

Corner Clip:

Top Inner H (in): 1.0000

Top Inner V(in): 3.0000

Top Outer H (in): 0.0000

Top Outer V (in): 0.0000

Bottom Inner H (in): 1.5000

Bottom Inner V(in): 3.0000

Bottom Outer H (in): 0.0000

Bottom Outer V (in): 0.0000

Diaphragm

Function: Connection plate

Width (in): 10.0000

Thickness (in): 1.0000

Material: Grade 50

Corner Clip:

Top Inner H (in): 1.0000

Top Inner V(in): 3.0000

Top Outer H (in): 0.0000

Top Outer V (in): 0.0000

Bottom Inner H (in): 1.5000

Bottom Inner V(in): 0.0000

Bottom Outer H (in): 0.0000

Bottom Outer V (in): 0.0000

Date:	8/2/2021	Span3-5ft-WB.lbsx	
Time:	1:47 PM	Bentley LEAP Bridge Steel [AASHTO LRFD 8th Ed. with 2017 Interims]	v21.00.00.28

Stiffener Locations

Transversal Stiffener:

Member Group:

Member 01

No.	Location Type	Location	Position	Web	Stiffener	Dist. from Top (in)	Dist. from Bottom (in)
1	Relative	0.0000	Both		Diaphragm	0.0000	0.0000
2	Relative	0.1095	Right		Cross Frame	0.0000	0.0000
3	Relative	0.2190	Right		Cross Frame	0.0000	0.0000
4	Relative	0.3286	Right		Cross Frame	0.0000	0.0000
5	Relative	0.4381	Right		Cross Frame	0.0000	0.0000
6	Relative	0.5488	Right		Cross Frame	0.0000	0.0000
7	Relative	0.6583	Right		Cross Frame	0.0000	0.0000
8	Relative	0.7679	Right		Cross Frame	0.0000	0.0000
9	Relative	0.8774	Right		Cross Frame	0.0000	0.0000
10	Relative	1.0000	Both		Diaphragm	0.0000	0.0000
11	Absolute (ft)	0.4167	Both		Bearing	0.0000	0.0000
12	Absolute (ft)	0.8333	Both		Bearing	0.0000	0.0000
13	Absolute (ft)	2.2083	Both		Bearing	0.0000	0.0000
14	Absolute (ft)	209.5833	Both		Bearing	0.0000	0.0000
15	Absolute (ft)	209.1667	Both		Bearing	0.0000	0.0000
16	Absolute (ft)	207.7917	Both		Bearing	0.0000	0.0000
17	Absolute (ft)	10.0000	Both		Cross Frame	0.0000	0.0000
18	Absolute (ft)	200.0000	Both		Cross Frame	0.0000	0.0000
19	Absolute (ft)	30.0000	Both		Cross Frame	0.0000	0.0000
20	Absolute (ft)	180.0000	Both		Cross Frame	0.0000	0.0000

Member 02

No.	Location Type	Location	Position	Web	Stiffener	Dist. from Top (in)	Dist. from Bottom (in)
1	Relative	0.0000	Both		Diaphragm	0.0000	0.0000
2	Relative	0.1095	Both		Cross Frame	0.0000	0.0000
3	Relative	0.2190	Both		Cross Frame	0.0000	0.0000
4	Relative	0.3286	Both		Cross Frame	0.0000	0.0000
5	Relative	0.4381	Both		Cross Frame	0.0000	0.0000
6	Relative	0.5488	Both		Cross Frame	0.0000	0.0000

Member 02

No.	Location Type	Location	Position	Web	Stiffener	Dist. from Top (in)	Dist. from Bottom (in)
7	Relative	0.6583	Both		Cross Frame	0.0000	0.0000
8	Relative	0.7679	Both		Cross Frame	0.0000	0.0000
9	Relative	0.8774	Both		Cross Frame	0.0000	0.0000
10	Relative	1.0000	Both		Diaphragm	0.0000	0.0000
11	Absolute (ft)	0.4167	Both		Bearing	0.0000	0.0000
12	Absolute (ft)	0.8333	Both		Bearing	0.0000	0.0000
13	Absolute (ft)	2.2083	Both		Bearing	0.0000	0.0000
14	Absolute (ft)	209.5833	Both		Bearing	0.0000	0.0000
15	Absolute (ft)	209.1667	Both		Bearing	0.0000	0.0000
16	Absolute (ft)	207.7917	Both		Bearing	0.0000	0.0000
17	Absolute (ft)	10.0000	Both		Cross Frame	0.0000	0.0000
18	Absolute (ft)	200.0000	Both		Cross Frame	0.0000	0.0000
19	Absolute (ft)	30.0000	Both		Cross Frame	0.0000	0.0000
20	Absolute (ft)	180.0000	Both		Cross Frame	0.0000	0.0000

Member 03

No.	Location Type	Location	Position	Web	Stiffener	Dist. from Top (in)	Dist. from Bottom (in)
1	Relative	0.0000	Both		Diaphragm	0.0000	0.0000
2	Relative	0.1095	Both		Cross Frame	0.0000	0.0000
3	Relative	0.2190	Both		Cross Frame	0.0000	0.0000
4	Relative	0.3286	Both		Cross Frame	0.0000	0.0000
5	Relative	0.4381	Both		Cross Frame	0.0000	0.0000
6	Relative	0.5488	Both		Cross Frame	0.0000	0.0000
7	Relative	0.6583	Both		Cross Frame	0.0000	0.0000
8	Relative	0.7679	Both		Cross Frame	0.0000	0.0000
9	Relative	0.8774	Both		Cross Frame	0.0000	0.0000
10	Relative	1.0000	Both		Diaphragm	0.0000	0.0000
11	Absolute (ft)	0.4167	Both		Bearing	0.0000	0.0000
12	Absolute (ft)	0.8333	Both		Bearing	0.0000	0.0000
13	Absolute (ft)	2.2083	Both		Bearing	0.0000	0.0000
14	Absolute (ft)	209.5833	Both		Bearing	0.0000	0.0000
15	Absolute (ft)	209.1667	Both		Bearing	0.0000	0.0000
16	Absolute (ft)	207.7917	Both		Bearing	0.0000	0.0000
17	Absolute (ft)	10.0000	Both		Cross Frame	0.0000	0.0000

Member 03

No.	Location Type	Location	Position	Web	Stiffener	Dist. from Top (in)	Dist. from Bottom (in)
18	Absolute (ft)	200.0000	Both		Cross Frame	0.0000	0.0000
19	Absolute (ft)	30.0000	Both		Cross Frame	0.0000	0.0000
20	Absolute (ft)	180.0000	Both		Cross Frame	0.0000	0.0000

Member 04

No.	Location Type	Location	Position	Web	Stiffener	Dist. from Top (in)	Dist. from Bottom (in)
1	Relative	0.0000	Both		Diaphragm	0.0000	0.0000
2	Relative	0.1095	Both		Cross Frame	0.0000	0.0000
3	Relative	0.2190	Both		Cross Frame	0.0000	0.0000
4	Relative	0.3286	Both		Cross Frame	0.0000	0.0000
5	Relative	0.4381	Both		Cross Frame	0.0000	0.0000
6	Relative	0.5488	Both		Cross Frame	0.0000	0.0000
7	Relative	0.6583	Both		Cross Frame	0.0000	0.0000
8	Relative	0.7679	Both		Cross Frame	0.0000	0.0000
9	Relative	0.8774	Both		Cross Frame	0.0000	0.0000
10	Relative	1.0000	Both		Diaphragm	0.0000	0.0000
11	Absolute (ft)	0.4167	Both		Bearing	0.0000	0.0000
12	Absolute (ft)	0.8333	Both		Bearing	0.0000	0.0000
13	Absolute (ft)	2.2083	Both		Bearing	0.0000	0.0000
14	Absolute (ft)	209.5833	Both		Bearing	0.0000	0.0000
15	Absolute (ft)	209.1667	Both		Bearing	0.0000	0.0000
16	Absolute (ft)	207.7917	Both		Bearing	0.0000	0.0000
17	Absolute (ft)	10.0000	Both		Cross Frame	0.0000	0.0000
18	Absolute (ft)	200.0000	Both		Cross Frame	0.0000	0.0000
19	Absolute (ft)	30.0000	Both		Cross Frame	0.0000	0.0000
20	Absolute (ft)	180.0000	Both		Cross Frame	0.0000	0.0000

Shear Connector Definition

Shear Connector Type: Stud

No.	Name	Height (in)	Diameter (in)	Material
1	ShearConn01	6.500004	0.875004	None

Shear Connector Locations

Shear Connector Type: Stud

Member Group:

Member 01

No.	Location Type	Begin Location	End Location	Longitudinal Spacing (ft)	Shear Stud	Number of Studs per Row	Transverse Spacing (in)
1	Absolute (ft)	0.5000	10.8750	0.5417	ShearConn01	3	5.0000
2	Absolute (ft)	10.8750	42.0000	0.8333	ShearConn01	3	5.0000
3	Absolute (ft)	42.0000	52.8750	1.2500	ShearConn01	3	6.0000
4	Absolute (ft)	52.8750	83.6250	1.7083	ShearConn01	3	6.0000
5	Absolute (ft)	83.6250	120.6250	2.0000	ShearConn01	3	6.0000
6	Absolute (ft)	120.6250	151.3750	1.7083	ShearConn01	3	6.0000
7	Absolute (ft)	151.3750	162.0000	1.2500	ShearConn01	3	6.0000
8	Absolute (ft)	162.0000	193.3750	0.8333	ShearConn01	3	5.0000
9	Absolute (ft)	193.3750	209.5000	0.5417	ShearConn01	3	5.0000

Member 02

No.	Location Type	Begin Location	End Location	Longitudinal Spacing (ft)	Shear Stud	Number of Studs per Row	Transverse Spacing (in)
1	Absolute (ft)	0.5000	10.8750	0.5417	ShearConn01	3	5.0000
2	Absolute (ft)	10.8750	42.0000	0.8333	ShearConn01	3	5.0000
3	Absolute (ft)	42.0000	52.8750	1.2500	ShearConn01	3	6.0000
4	Absolute (ft)	52.8750	83.6250	1.7083	ShearConn01	3	6.0000
5	Absolute (ft)	83.6250	120.6250	2.0000	ShearConn01	3	6.0000
6	Absolute (ft)	120.6250	151.3750	1.7083	ShearConn01	3	6.0000
7	Absolute (ft)	151.3750	162.0000	1.2500	ShearConn01	3	6.0000
8	Absolute (ft)	162.0000	193.3750	0.8333	ShearConn01	3	5.0000
9	Absolute (ft)	193.3750	209.5000	0.5417	ShearConn01	3	5.0000

Member 03

No.	Location Type	Begin Location	End Location	Longitudinal Spacing (ft)	Shear Stud	Number of Studs per Row	Transverse Spacing (in)
1	Absolute (ft)	0.5000	10.8750	0.5417	ShearConn01	3	5.0000
2	Absolute (ft)	10.8750	42.0000	0.8333	ShearConn01	3	5.0000
3	Absolute (ft)	42.0000	52.8750	1.2500	ShearConn01	3	6.0000

Member 03

No.	Location Type	Begin Location	End Location	Longitudinal Spacing (ft)	Shear Stud	Number of Studs per Row	Transverse Spacing (in)
4	Absolute (ft)	52.8750	83.6250	1.7083	ShearConn01	3	6.0000
5	Absolute (ft)	83.6250	120.6250	2.0000	ShearConn01	3	6.0000
6	Absolute (ft)	120.6250	151.3750	1.7083	ShearConn01	3	6.0000
7	Absolute (ft)	151.3750	162.0000	1.2500	ShearConn01	3	6.0000
8	Absolute (ft)	162.0000	193.3750	0.8333	ShearConn01	3	5.0000
9	Absolute (ft)	193.3750	209.5000	0.5417	ShearConn01	3	5.0000

Member 04

No.	Location Type	Begin Location	End Location	Longitudinal Spacing (ft)	Shear Stud	Number of Studs per Row	Transverse Spacing (in)
1	Absolute (ft)	0.5000	10.8750	0.5417	ShearConn01	3	5.0000
2	Absolute (ft)	10.8750	42.0000	0.8333	ShearConn01	3	5.0000
3	Absolute (ft)	42.0000	52.8750	1.2500	ShearConn01	3	6.0000
4	Absolute (ft)	52.8750	83.6250	1.7083	ShearConn01	3	6.0000
5	Absolute (ft)	83.6250	120.6250	2.0000	ShearConn01	3	6.0000
6	Absolute (ft)	120.6250	151.3750	1.7083	ShearConn01	3	6.0000
7	Absolute (ft)	151.3750	162.0000	1.2500	ShearConn01	3	6.0000
8	Absolute (ft)	162.0000	193.3750	0.8333	ShearConn01	3	5.0000
9	Absolute (ft)	193.3750	209.5000	0.5417	ShearConn01	3	5.0000

Appurtenance Locations

Parapet

No.	Appurtenance Name	Reference Element	Reference Offset(ft)	Refrence Location	Reference Back	Reference Method	Offset (ft)	Reference Ahead	Reference Method	Offset (ft)
1	Parapet 1	Left edge of slab	6.0000	Centerline	Support 01	Along alignment	0.0000	Support 02	Along alignment	0.0000
2	Parapet 2	Right edge of slab	0.0000	Outside face	Support 01	Along alignment	0.0000	Support 02	Along alignment	0.0000

Railing

No.	Appurtenance Name	Reference Element	Reference Offset(ft)	Refrence Location	Reference Back	Reference Method	Offset (ft)	Reference Ahead	Reference Method	Offset (ft)
1	Railing 1	Left edge of slab	0.0000	Outside face	Support 01	Along alignment	0.0000	Support 02	Along alignment	0.0000

Loads

Dead Loads / DC1 Group

Stay In Place Form

Member Group	Girder	Load Type	Reference Type	Reference	Dist Unit	Val 1 (Kips, Kip/ft, Kip-ft)	Loc 1 (ft or %)	Val 2 (Kips or Kip/ft)	Loc 2 (ft or %)
Group01	1	Trapezoidal	Group	---	ft	0.1500	0.0000	0.1500	210.0000
Group01	2	Trapezoidal	Group	---	ft	0.1800	0.0000	0.1800	210.0000
Group01	3	Trapezoidal	Group	---	ft	0.1800	0.0000	0.1800	210.0000
Group01	4	Trapezoidal	Group	---	ft	0.1660	0.0000	0.1660	210.0000

Initial - Self Weight Steel

Member Group	Girder	Load Type	Reference Type	Reference	Dist Unit	Val 1 (Kips, Kip/ft, Kip-ft)	Loc 1 (ft or %)	Val 2 (Kips or Kip/ft)	Loc 2 (ft or %)
Group01	1	Trapezoidal	Group	---	ft	0.3039	0.0000	0.3039	26.0000
Group01	1	Trapezoidal	Group	---	ft	0.3464	26.0000	0.3464	42.0000
Group01	1	Trapezoidal	Group	---	ft	0.4665	42.0000	0.4665	168.0000
Group01	1	Trapezoidal	Group	---	ft	0.3464	168.0000	0.3464	184.0000
Group01	1	Trapezoidal	Group	---	ft	0.3039	184.0000	0.3039	210.0000
Group01	2	Trapezoidal	Group	---	ft	0.3039	0.0000	0.3039	26.0000
Group01	2	Trapezoidal	Group	---	ft	0.3464	26.0000	0.3464	42.0000
Group01	2	Trapezoidal	Group	---	ft	0.4665	42.0000	0.4665	168.0000
Group01	2	Trapezoidal	Group	---	ft	0.3464	168.0000	0.3464	184.0000
Group01	2	Trapezoidal	Group	---	ft	0.3039	184.0000	0.3039	210.0000
Group01	3	Trapezoidal	Group	---	ft	0.3039	0.0000	0.3039	26.0000
Group01	3	Trapezoidal	Group	---	ft	0.3464	26.0000	0.3464	42.0000
Group01	3	Trapezoidal	Group	---	ft	0.4665	42.0000	0.4665	168.0000
Group01	3	Trapezoidal	Group	---	ft	0.3464	168.0000	0.3464	184.0000
Group01	3	Trapezoidal	Group	---	ft	0.3039	184.0000	0.3039	210.0000

Member Group	Girder	Load Type	Reference Type	Reference	Dist Unit	Val 1 (Kips, Kip/ft, Kip-ft)	Loc 1 (ft or %)	Val 2 (Kips or Kip/ft)	Loc 2 (ft or %)
Group01	4	Trapezoidal	Group	---	ft	0.3039	0.0000	0.3039	26.0000
Group01	4	Trapezoidal	Group	---	ft	0.3464	26.0000	0.3464	42.0000
Group01	4	Trapezoidal	Group	---	ft	0.4665	42.0000	0.4665	168.0000
Group01	4	Trapezoidal	Group	---	ft	0.3464	168.0000	0.3464	184.0000
Group01	4	Trapezoidal	Group	---	ft	0.3039	184.0000	0.3039	210.0000

Stage 01 - Self Weight Slab

Member Group	Girder	Load Type	Reference Type	Reference	Dist Unit	Val 1 (Kips, Kip/ft, Kip-ft)	Loc 1 (ft or %)	Val 2 (Kips or Kip/ft)	Loc 2 (ft or %)
Group01	1	Trapezoidal	Group	---	ft	1.0510	0.0000	1.0510	210.0000
Group01	2	Trapezoidal	Group	---	ft	1.2000	0.0000	1.2000	210.0000
Group01	3	Trapezoidal	Group	---	ft	1.2000	0.0000	1.2000	210.0000
Group01	4	Trapezoidal	Group	---	ft	1.1330	0.0000	1.1330	210.0000

Final - Self Weight Slab

Member Group	Girder	Load Type	Reference Type	Reference	Dist Unit	Val 1 (Kips, Kip/ft, Kip-ft)	Loc 1 (ft or %)	Val 2 (Kips or Kip/ft)	Loc 2 (ft or %)
Group01	1	Trapezoidal	Group	---	ft	1.0510	0.0000	1.0510	210.0000
Group01	2	Trapezoidal	Group	---	ft	1.2000	0.0000	1.2000	210.0000
Group01	3	Trapezoidal	Group	---	ft	1.2000	0.0000	1.2000	210.0000
Group01	4	Trapezoidal	Group	---	ft	1.1330	0.0000	1.1330	210.0000

Initial - Self Weight Stiffeners

Member Group	Girder	Load Type	Reference Type	Reference	Dist Unit	Val 1 (Kips, Kip/ft, Kip-ft)	Loc 1 (ft or %)	Val 2 (Kips or Kip/ft)	Loc 2 (ft or %)
Group01	1	Point	Group	---	%	0.5266	0.0000	---	---
Group01	1	Point	Group	---	%	0.1231	10.9524	---	---
Group01	1	Point	Group	---	%	0.1231	21.9048	---	---
Group01	1	Point	Group	---	%	0.1231	32.8571	---	---
Group01	1	Point	Group	---	%	0.1231	43.8095	---	---
Group01	1	Point	Group	---	%	0.1231	54.8810	---	---
Group01	1	Point	Group	---	%	0.1231	65.8333	---	---
Group01	1	Point	Group	---	%	0.1231	76.7857	---	---
Group01	1	Point	Group	---	%	0.1231	87.7381	---	---

Date:	8/2/2021	Span3-5ft-WB.lbsx	
Time:	1:47 PM	Bentley LEAP Bridge Steel [AASHTO LRFD 8th Ed. with 2017 Interims]	v21.00.00.28

Member Group	Girder	Load Type	Reference Type	Reference	Dist Unit	Val 1 (Kips, Kip/ft, Kip-ft)	Loc 1 (ft or %)	Val 2 (Kips or Kip/ft)	Loc 2 (ft or %)
Group01	1	Point	Group	---	%	0.5266	100.0000	---	---
Group01	1	Point	Group	---	%	0.4726	0.1984	---	---
Group01	1	Point	Group	---	%	0.4726	0.3968	---	---
Group01	1	Point	Group	---	%	0.4726	1.0516	---	---
Group01	1	Point	Group	---	%	0.4726	99.8016	---	---
Group01	1	Point	Group	---	%	0.4726	99.6032	---	---
Group01	1	Point	Group	---	%	0.4726	98.9484	---	---
Group01	1	Point	Group	---	%	0.2462	4.7619	---	---
Group01	1	Point	Group	---	%	0.2462	95.2381	---	---
Group01	1	Point	Group	---	%	0.2462	14.2857	---	---
Group01	1	Point	Group	---	%	0.2462	85.7143	---	---
Group01	2	Point	Group	---	%	0.5266	0.0000	---	---
Group01	2	Point	Group	---	%	0.2462	10.9524	---	---
Group01	2	Point	Group	---	%	0.2462	21.9048	---	---
Group01	2	Point	Group	---	%	0.2462	32.8571	---	---
Group01	2	Point	Group	---	%	0.2462	43.8095	---	---
Group01	2	Point	Group	---	%	0.2462	54.8810	---	---
Group01	2	Point	Group	---	%	0.2462	65.8333	---	---
Group01	2	Point	Group	---	%	0.2462	76.7857	---	---
Group01	2	Point	Group	---	%	0.2462	87.7381	---	---
Group01	2	Point	Group	---	%	0.5266	100.0000	---	---
Group01	2	Point	Group	---	%	0.4726	0.1984	---	---
Group01	2	Point	Group	---	%	0.4726	0.3968	---	---
Group01	2	Point	Group	---	%	0.4726	1.0516	---	---
Group01	2	Point	Group	---	%	0.4726	99.8016	---	---
Group01	2	Point	Group	---	%	0.4726	99.6032	---	---
Group01	2	Point	Group	---	%	0.4726	98.9484	---	---
Group01	2	Point	Group	---	%	0.2462	4.7619	---	---
Group01	2	Point	Group	---	%	0.2462	95.2381	---	---
Group01	2	Point	Group	---	%	0.2462	14.2857	---	---
Group01	2	Point	Group	---	%	0.2462	85.7143	---	---
Group01	3	Point	Group	---	%	0.5266	0.0000	---	---
Group01	3	Point	Group	---	%	0.2462	10.9524	---	---
Group01	3	Point	Group	---	%	0.2462	21.9048	---	---
Group01	3	Point	Group	---	%	0.2462	32.8571	---	---

Date:	8/2/2021	Span3-5ft-WB.lbsx	
Time:	1:47 PM	Bentley LEAP Bridge Steel [AASHTO LRFD 8th Ed. with 2017 Interims]	v21.00.00.28

Member Group	Girder	Load Type	Reference Type	Reference	Dist Unit	Val 1 (Kips, Kip/ft, Kip-ft)	Loc 1 (ft or %)	Val 2 (Kips or Kip/ft)	Loc 2 (ft or %)
Group01	3	Point	Group	---	%	0.2462	43.8095	---	---
Group01	3	Point	Group	---	%	0.2462	54.8810	---	---
Group01	3	Point	Group	---	%	0.2462	65.8333	---	---
Group01	3	Point	Group	---	%	0.2462	76.7857	---	---
Group01	3	Point	Group	---	%	0.2462	87.7381	---	---
Group01	3	Point	Group	---	%	0.5266	100.0000	---	---
Group01	3	Point	Group	---	%	0.4726	0.1984	---	---
Group01	3	Point	Group	---	%	0.4726	0.3968	---	---
Group01	3	Point	Group	---	%	0.4726	1.0516	---	---
Group01	3	Point	Group	---	%	0.4726	99.8016	---	---
Group01	3	Point	Group	---	%	0.4726	99.6032	---	---
Group01	3	Point	Group	---	%	0.4726	98.9484	---	---
Group01	3	Point	Group	---	%	0.2462	4.7619	---	---
Group01	3	Point	Group	---	%	0.2462	95.2381	---	---
Group01	3	Point	Group	---	%	0.2462	14.2857	---	---
Group01	3	Point	Group	---	%	0.2462	85.7143	---	---
Group01	4	Point	Group	---	%	0.5266	0.0000	---	---
Group01	4	Point	Group	---	%	0.2462	10.9524	---	---
Group01	4	Point	Group	---	%	0.2462	21.9048	---	---
Group01	4	Point	Group	---	%	0.2462	32.8571	---	---
Group01	4	Point	Group	---	%	0.2462	43.8095	---	---
Group01	4	Point	Group	---	%	0.2462	54.8810	---	---
Group01	4	Point	Group	---	%	0.2462	65.8333	---	---
Group01	4	Point	Group	---	%	0.2462	76.7857	---	---
Group01	4	Point	Group	---	%	0.2462	87.7381	---	---
Group01	4	Point	Group	---	%	0.5266	100.0000	---	---
Group01	4	Point	Group	---	%	0.4726	0.1984	---	---
Group01	4	Point	Group	---	%	0.4726	0.3968	---	---
Group01	4	Point	Group	---	%	0.4726	1.0516	---	---
Group01	4	Point	Group	---	%	0.4726	99.8016	---	---
Group01	4	Point	Group	---	%	0.4726	99.6032	---	---
Group01	4	Point	Group	---	%	0.4726	98.9484	---	---
Group01	4	Point	Group	---	%	0.2462	4.7619	---	---
Group01	4	Point	Group	---	%	0.2462	95.2381	---	---
Group01	4	Point	Group	---	%	0.2462	14.2857	---	---

Date:	8/2/2021	Span3-5ft-WB.lbsx	
Time:	1:47 PM	Bentley LEAP Bridge Steel [AASHTO LRFD 8th Ed. with 2017 Interims]	v21.00.00.28

Member Group	Girder	Load Type	Reference Type	Reference	Dist Unit	Val 1 (Kips, Kip/ft, Kip-ft)	Loc 1 (ft or %)	Val 2 (Kips or Kip/ft)	Loc 2 (ft or %)
Group01	4	Point	Group	---	%	0.2462	85.7143	---	---

Initial - Self Weight X-Frames

Member Group	Girder	Load Type	Reference Type	Reference	Dist Unit	Val 1 (Kips, Kip/ft, Kip-ft)	Loc 1 (ft or %)	Val 2 (Kips or Kip/ft)	Loc 2 (ft or %)
Group01	1	Point	Group	---	%	0.6607	0.0000	---	---
Group01	2	Point	Group	---	%	1.3214	0.0000	---	---
Group01	1	Point	Group	---	%	0.6607	100.0000	---	---
Group01	2	Point	Group	---	%	1.3214	100.0000	---	---
Group01	1	Point	Group	---	%	0.3182	10.9524	---	---
Group01	2	Point	Group	---	%	0.6363	10.9524	---	---
Group01	1	Point	Group	---	%	0.3182	21.9048	---	---
Group01	2	Point	Group	---	%	0.6363	21.9048	---	---
Group01	1	Point	Group	---	%	0.3182	32.8571	---	---
Group01	2	Point	Group	---	%	0.6363	32.8571	---	---
Group01	1	Point	Group	---	%	0.3182	43.8095	---	---
Group01	2	Point	Group	---	%	0.6363	43.8095	---	---
Group01	1	Point	Group	---	%	0.3182	54.8810	---	---
Group01	2	Point	Group	---	%	0.6363	54.8810	---	---
Group01	1	Point	Group	---	%	0.3182	65.8333	---	---
Group01	2	Point	Group	---	%	0.6363	65.8333	---	---
Group01	1	Point	Group	---	%	0.3182	76.7857	---	---
Group01	2	Point	Group	---	%	0.6363	76.7857	---	---
Group01	1	Point	Group	---	%	0.3182	87.7381	---	---
Group01	2	Point	Group	---	%	0.6363	87.7381	---	---
Group01	3	Point	Group	---	%	1.3214	0.0000	---	---
Group01	3	Point	Group	---	%	1.3214	100.0000	---	---
Group01	3	Point	Group	---	%	0.6363	10.9524	---	---
Group01	3	Point	Group	---	%	0.6363	21.9048	---	---
Group01	3	Point	Group	---	%	0.6363	32.8571	---	---
Group01	3	Point	Group	---	%	0.6363	43.8095	---	---
Group01	3	Point	Group	---	%	0.6363	54.8810	---	---
Group01	3	Point	Group	---	%	0.6363	65.8333	---	---
Group01	3	Point	Group	---	%	0.6363	76.7857	---	---
Group01	3	Point	Group	---	%	0.6363	87.7381	---	---

Member Group	Girder	Load Type	Reference Type	Reference	Dist Unit	Val 1 (Kips, Kip/ft, Kip-ft)	Loc 1 (ft or %)	Val 2 (Kips or Kip/ft)	Loc 2 (ft or %)
Group01	4	Point	Group	---	%	0.6607	0.0000	---	---
Group01	4	Point	Group	---	%	0.6607	100.0000	---	---
Group01	4	Point	Group	---	%	0.3182	10.9524	---	---
Group01	4	Point	Group	---	%	0.3182	21.9048	---	---
Group01	4	Point	Group	---	%	0.3182	32.8571	---	---
Group01	4	Point	Group	---	%	0.3182	43.8095	---	---
Group01	4	Point	Group	---	%	0.3182	54.8810	---	---
Group01	4	Point	Group	---	%	0.3182	65.8333	---	---
Group01	4	Point	Group	---	%	0.3182	76.7857	---	---
Group01	4	Point	Group	---	%	0.3182	87.7381	---	---

Utility

Member Group	Girder	Load Type	Reference Type	Reference	Dist Unit	Val 1 (Kips, Kip/ft, Kip-ft)	Loc 1 (ft or %)	Val 2 (Kips or Kip/ft)	Loc 2 (ft or %)
Group01	1	Trapezoidal	Group	---	%	0.1165	0.0000	0.1165	100.0000
Group01	2	Trapezoidal	Group	---	%	0.1165	0.0000	0.1165	100.0000
Group01	3	Trapezoidal	Group	---	%	0.1165	0.0000	0.1165	100.0000
Group01	4	Trapezoidal	Group	---	%	0.1165	0.0000	0.1165	100.0000

Dead Loads / DC2 Group

Final - Self Weight Appurtenance - Parapets

Member Group	Girder	Load Type	Reference Type	Reference	Dist Unit	Val 1 (Kips, Kip/ft, Kip-ft)	Loc 1 (ft or %)	Val 2 (Kips or Kip/ft)	Loc 2 (ft or %)
Group01	1	Trapezoidal	Group	---	ft	0.2120	0.0000	0.2120	210.0000
Group01	3	Trapezoidal	Group	---	ft	0.2120	0.0000	0.2120	210.0000
Group01	4	Trapezoidal	Group	---	ft	0.2120	0.0000	0.2120	210.0000
Group01	2	Trapezoidal	Group	---	ft	0.2120	0.0000	0.2120	210.0000

Final - Self Weight Appurtenance - Railings

Member Group	Girder	Load Type	Reference Type	Reference	Dist Unit	Val 1 (Kips, Kip/ft, Kip-ft)	Loc 1 (ft or %)	Val 2 (Kips or Kip/ft)	Loc 2 (ft or %)
Group01	1	Trapezoidal	Group	---	ft	0.0638	0.0000	0.0638	210.0000
Group01	3	Trapezoidal	Group	---	ft	0.0638	0.0000	0.0638	210.0000
Group01	4	Trapezoidal	Group	---	ft	0.0638	0.0000	0.0638	210.0000

Date:	8/2/2021	Span3-5ft-WB.lbsx	
Time:	1:47 PM	Bentley LEAP Bridge Steel [AASHTO LRFD 8th Ed. with 2017 Interims]	v21.00.00.28

Member Group	Girder	Load Type	Reference Type	Reference	Dist Unit	Val 1 (Kips, Kip/ft, Kip-ft)	Loc 1 (ft or %)	Val 2 (Kips or Kip/ft)	Loc 2 (ft or %)
Group01	2	Trapezoidal	Group	---	ft	0.0638	0.0000	0.0638	210.0000

Dead Loads / DW Group

Final - Wearing Surface

Member Group	Girder	Load Type	Reference Type	Reference	Dist Unit	Val 1 (Kips, Kip/ft, Kip-ft)	Loc 1 (ft or %)	Val 2 (Kips or Kip/ft)	Loc 2 (ft or %)
Group01	1	Trapezoidal	Group	---	ft	0.1719	0.0000	0.1719	210.0000
Group01	2	Trapezoidal	Group	---	ft	0.1719	0.0000	0.1719	210.0000
Group01	3	Trapezoidal	Group	---	ft	0.1719	0.0000	0.1719	210.0000
Group01	4	Trapezoidal	Group	---	ft	0.1719	0.0000	0.1719	210.0000

Live Loads

HL-93

Truck Name	Include Lane	Notional	Special Envelope	Special Env. Factor	Lane Intensity (k/ft)
Double Tandem	Yes	Yes	Yes	1.0000	0.6400
Axle No.	**Intensity (k/ft)**	**Max Spacing (ft)**	**Min Spacing (ft)**	**Increment (ft)**	
1	25.0000	0.0000	0.0000	0.0000	
2	25.0000	4.0000	4.0000	0.0000	
3	25.0000	40.0000	26.0000	4.0000	
4	25.0000	4.0000	4.0000	0.0000	
Double Truck	Yes	Yes	Yes	0.9000	0.6400
Axle No.	**Intensity (k/ft)**	**Max Spacing (ft)**	**Min Spacing (ft)**	**Increment (ft)**	
1	8.0000	0.0000	0.0000	0.0000	
2	32.0000	14.0000	14.0000	0.0000	
3	32.0000	14.0000	14.0000	0.0000	
4	8.0000	300.0000	50.0000	14.0000	
5	32.0000	14.0000	14.0000	0.0000	
6	32.0000	14.0000	14.0000	0.0000	
Design Lane	No	No	No	---	---
Axle No.	**Intensity (k/ft)**	**Max Spacing (ft)**	**Min Spacing (ft)**	**Increment (ft)**	
Design Tandem	Yes	Yes	No	---	0.6400
Axle No.	**Intensity (k/ft)**	**Max Spacing (ft)**	**Min Spacing (ft)**	**Increment (ft)**	

Truck Name	Include Lane	Notional	Special Envelope	Special Env. Factor	Lane Intensity (k/ft)
Axle No.	**Intensity (k/ft)**	**Max Spacing (ft)**	**Min Spacing (ft)**	**Increment (ft)**	
1	25.0000	0.0000	0.0000	0.0000	
2	25.0000	4.0000	4.0000	0.0000	
Design Truck	Yes	Yes	No	---	0.6400
Axle No.	**Intensity (k/ft)**	**Max Spacing (ft)**	**Min Spacing (ft)**	**Increment (ft)**	
1	8.0000	0.0000	0.0000	0.0000	
2	32.0000	14.0000	14.0000	0.0000	
3	32.0000	30.0000	14.0000	2.0000	

Fatigue Load

Truck Name	Include Lane	Notional	Special Envelope	Special Env. Factor	Lane Intensity (k/ft)
Fatigue Truck	No	No	No	---	---
Axle No.	**Intensity (k/ft)**	**Max Spacing (ft)**	**Min Spacing (ft)**	**Increment (ft)**	
1	8.0000	0.0000	0.0000	0.0000	
2	32.0000	14.0000	14.0000	0.0000	
3	32.0000	30.0000	30.0000	0.0000	

HL-93 (Deflection per AASHTO)

Truck Name	Include Lane	Notional	Special Envelope	Special Env. Factor	Lane Intensity (k/ft)
Design Lane	No	No	No	---	---
Axle No.	**Intensity (k/ft)**	**Max Spacing (ft)**	**Min Spacing (ft)**	**Increment (ft)**	
Design Truck	No	No	No	---	---
Axle No.	**Intensity (k/ft)**	**Max Spacing (ft)**	**Min Spacing (ft)**	**Increment (ft)**	
1	8.0000	0.0000	0.0000	0.0000	
2	32.0000	14.0000	14.0000	0.0000	
3	32.0000	30.0000	14.0000	2.0000	
Design Truck 25%	Yes	No	No	---	0.6400
Axle No.	**Intensity (k/ft)**	**Max Spacing (ft)**	**Min Spacing (ft)**	**Increment (ft)**	
1	2.0000	0.0000	0.0000	0.0000	
2	8.0000	14.0000	14.0000	0.0000	
3	8.0000	30.0000	14.0000	2.0000	

FL120

Truck Name	Include Lane	Notional	Special Envelope	Special Env. Factor	Lane Intensity (k/ft)

Date:	8/2/2021	Span3-5ft-WB.lbsx	
Time:	1:47 PM	Bentley LEAP Bridge Steel [AASHTO LRFD 8th Ed. with 2017 Interims]	v21.00.00.28

Truck Name	Include Lane	Notional	Special Envelope	Special Env. Factor	Lane Intensity (k/ft)
FL120	Yes	No	No	---	0.2000
Axle No.	**Intensity (k/ft)**	**Max Spacing (ft)**	**Min Spacing (ft)**	**Increment (ft)**	
1	13.3300	0.0000	0.0000	0.0000	
2	53.3300	14.0000	14.0000	0.0000	
3	53.3300	14.0000	14.0000	0.0000	
FL120 Laneload	No	No	No	---	---
Axle No.	**Intensity (k/ft)**	**Max Spacing (ft)**	**Min Spacing (ft)**	**Increment (ft)**	

d. LEAP Steel Bridge Output – Span 3

Date:	8/2/2021	Span3-5ft-WB.lbsx	
Time:	3:01 PM	Bentley LEAP Bridge Steel [AASHTO LRFD 8th Ed. with 2017 Interims]	v21.00.00.28

Load Rating

Group01 Member 01

Design Inventory (Strength I) Permit

FLEXURE RATING

POI Loc. (ft)	Moment Rating Factor	Vehicle Tonnage (Tons)	Rating Tonnage (Tons)	Moment/Stress Resistance (kip-in / ksi)	Controlling Equation	φc	φs	DC1 (kip-in / ksi)	DC2 (kip-in / ksi)	DW (kip-ft / ksi)	flDC1 (ksi)	flDC2 (ksi)	flDW (ksi)	LL (kip-in / ksi)	flLL (ksi)
0.000	440.368	59.995	26419.856	48.881	Equation 6.10.8.1.1-1 lateral torsion buckling	1	1	0.000	0.000	0.000	0.011	0.001	0.001	-0.014	0.292
0.400	17.520	59.995	1051.121	48.881	Equation 6.10.8.1.1-1 lateral torsion buckling	1	1	-0.002	0.001	0.000	0.096	0.017	0.013	-2.496	0.875
0.500	999.990	59.995	59994.402	229125.880	Equation 6.10.7.1.1-1	1	1	0.000	0.000	0.000	0.000	0.000	0.000	0.000	0.000
0.600	11.267	59.995	675.972	48.881	Equation 6.10.8.1.1-1 lateral torsion buckling	1	1	0.184	0.006	0.005	0.110	0.019	0.014	-4.024	0.981
11.500	6.964	59.995	417.817	229125.880	Equation 6.10.7.1.1-1	1	1	29762.697	4456.877	3334.051	0.125	0.012	0.009	23502.258	3.969

Date:	8/2/2021	Span3-5ft-WB.lbsx	
Time:	3:01 PM	Bentley LEAP Bridge Steel [AASHTO LRFD 8th Ed. with 2017 Interims]	v21.00.00.28

FLEXURE RATING

POI Loc. (ft)	Moment Rating Factor	Vehicle Tonnage (Tons)	Rating Tonnage (Tons)	Moment/Stress Resistance (kip-in / ksi)	Controlling Equation	φc	φs	DC1 (kip-in / ksi)	DC2 (kip-in / ksi)	DW (kip-ft / ksi)	flDC1 (ksi)	flDC2 (ksi)	flDW (ksi)	LL (kip-in / ksi)	flLL (ksi)
21.400	3.314	59.995	198.828	229125.880	Equation 6.10.7.1.1-1	1	1	53859.574	8034.591	6010.428	0.129	0.006	0.004	40725.491	8.459
23.000	3.009	59.995	180.550	229125.880	Equation 6.10.7.1.1-1	1	1	57530.878	8575.963	6415.411	0.147	0.005	0.004	43532.316	9.184
25.900	2.470	59.995	148.167	229125.880	Equation 6.10.7.1.1-1	1	1	63992.774	9538.096	7135.153	0.248	0.001	0.001	49123.454	12.088
26.100	3.505	59.995	210.268	286159.759	Equation 6.10.7.1.1-1	1	1	64424.454	9582.388	7168.287	0.150	0.000	0.000	49498.786	6.876
34.500	2.824	59.995	169.414	286159.759	Equation 6.10.7.1.1-1	1	1	81905.424	12149.673	9088.793	0.207	-0.010	-0.007	61841.404	2.307
41.900	2.162	59.995	129.713	286159.759	Equation 6.10.7.1.1-1	1	1	95837.646	14181.834	10608.990	0.269	-0.018	-0.013	72773.103	3.015
42.000	3.344	59.995	200.609	370690.549	Equation 6.10.7.1.1-1	1	1	96019.119	14186.515	10612.491	0.078	-0.005	-0.004	72924.462	0.895
42.100	3.335	59.995	200.089	370690.549	Equation 6.10.7.1.1-1	1	1	96197.498	14212.621	10632.021	0.076	-0.005	-0.004	73019.645	0.912
42.300	3.318	59.995	199.049	370690.549	Equation 6.10.7.1.1-1	1	1	96553.230	14264.647	10670.940	0.075	-0.005	-0.004	73210.011	0.946
46.000	2.977	59.995	178.578	370690.549	Equation 6.10.7.1.1-1	1	1	102956.099	15188.968	11362.395	0.057	-0.005	-0.004	77860.440	1.603
57.500	2.357	59.995	141.408	370690.549	Equation 6.10.7.1.1-1	1	1	120191.029	17701.957	13242.284	0.136	-0.009	-0.007	90396.324	1.381

Date:	8/2/2021	Span3-5ft-WB.lbsx	
Time:	3:01 PM	Bentley LEAP Bridge Steel [AASHTO LRFD 8th Ed. with 2017 Interims]	v21.00.00.28

FLEXURE RATING

POI Loc. (ft)	Moment Rating Factor	Vehicle Tonnage (Tons)	Rating Tonnage (Tons)	Moment/Stress Resistance (kip-in / ksi)	Controlling Equation	φc	φs	DC1 (kip-in / ksi)	DC2 (kip-in / ksi)	DW (kip-ft / ksi)	flDC1 (ksi)	flDC2 (ksi)	flDW (ksi)	LL (kip-in / ksi)	flLL (ksi)
63.200	2.153	59.995	129.164	370690.549	Equation 6.10.7.1.1-1	1	1	127421.489	18748.428	14025.117	0.134	-0.009	-0.007	95217.686	1.283
69.000	1.968	59.995	118.062	370690.549	Equation 6.10.7.1.1-1	1	1	133884.639	19665.240	14710.957	0.117	-0.009	-0.007	100099.314	1.408
80.500	1.723	59.995	103.396	370690.549	Equation 6.10.7.1.1-1	1	1	143635.002	21088.156	15775.393	0.191	-0.013	-0.010	107350.596	1.503
84.100	1.647	59.995	98.820	370690.549	Equation 6.10.7.1.1-1	1	1	145959.582	21424.476	16026.984	0.186	-0.013	-0.009	110576.953	1.566
92.000	1.562	59.995	93.719	370690.549	Equation 6.10.7.1.1-1	1	1	149845.478	21967.749	16433.391	0.137	-0.011	-0.008	113294.214	1.798
103.625	1.520	59.995	91.214	370690.549	Equation 6.10.7.1.1-1	1	1	152093.108	22310.120	16689.508	0.215	-0.014	-0.011	114645.456	1.744
105.000	1.521	59.995	91.277	370690.549	Equation 6.10.7.1.1-1	1	1	152118.589	22314.073	16692.466	0.214	-0.014	-0.011	114557.851	1.737
115.250	1.548	59.995	92.863	370690.549	Equation 6.10.7.1.1-1	1	1	150747.323	22100.133	16532.423	0.129	-0.010	-0.008	113961.816	1.630
125.900	1.658	59.995	99.468	370690.549	Equation 6.10.7.1.1-1	1	1	145945.003	21426.747	16028.684	0.197	-0.013	-0.010	109815.170	1.576
126.750	1.667	59.995	100.020	370690.549	Equation 6.10.7.1.1-1	1	1	145431.904	21351.915	15972.703	0.197	-0.013	-0.010	109557.036	1.586
138.250	1.863	59.995	111.775	370690.549	Equation 6.10.7.1.1-1	1	1	136576.632	20060.347	15006.521	0.110	-0.008	-0.006	103952.484	1.474

Date:	8/2/2021	Span3-5ft-WB.lbsx	
Time:	3:01 PM	Bentley LEAP Bridge Steel [AASHTO LRFD 8th Ed. with 2017 Interims]	v21.00.00.28

FLEXURE RATING

POI Loc. (ft)	Moment Rating Factor	Vehicle Tonnage (Tons)	Rating Tonnage (Tons)	Moment/Stress Resistance (kip-in / ksi)	Controlling Equation	φc	φs	DC1 (kip-in / ksi)	DC2 (kip-in / ksi)	DW (kip-ft / ksi)	flDC1 (ksi)	flDC2 (ksi)	flDW (ksi)	LL (kip-in / ksi)	flLL (ksi)
146.800	2.090	59.995	125.399	370690.549	Equation 6.10.7.1.1-1	1	1	127394.947	18754.161	14029.405	0.147	-0.009	-0.007	98524.699	1.085
149.750	2.199	59.995	131.936	370690.549	Equation 6.10.7.1.1-1	1	1	123773.711	18230.259	13637.492	0.145	-0.009	-0.006	95886.180	0.934
161.250	2.775	59.995	166.480	370690.549	Equation 6.10.7.1.1-1	1	1	107430.094	15851.805	11858.244	0.064	-0.004	-0.003	83118.150	0.887
167.700	3.259	59.995	195.523	370690.549	Equation 6.10.7.1.1-1	1	1	96522.467	14279.240	10681.856	0.101	-0.007	-0.005	74491.978	0.976
167.900	3.272	59.995	196.323	370690.549	Equation 6.10.7.1.1-1	1	1	96166.783	14227.277	10642.984	0.102	-0.007	-0.005	74277.379	0.996
168.000	2.110	59.995	126.568	286159.759	Equation 6.10.7.1.1-1	1	1	95988.577	14201.904	10624.003	0.343	-0.024	-0.018	74170.080	3.326
168.100	2.115	59.995	126.915	286159.759	Equation 6.10.7.1.1-1	1	1	95807.313	14197.550	10620.746	0.342	-0.024	-0.018	74019.493	3.347
172.750	2.431	59.995	145.837	286159.759	Equation 6.10.7.1.1-1	1	1	87221.995	12947.674	9685.753	0.291	-0.023	-0.018	67160.745	4.239
183.900	3.300	59.995	197.981	286159.759	Equation 6.10.7.1.1-1	1	1	64430.821	9601.458	7182.553	0.198	-0.024	-0.018	50679.003	8.749
184.100	2.312	59.995	138.728	229125.880	Equation 6.10.7.1.1-1	1	1	63994.415	9558.492	7150.411	0.332	-0.041	-0.031	50433.127	15.144
184.250	2.514	59.995	150.822	229125.880	Equation 6.10.7.1.1-1	1	1	63665.963	9512.036	7115.659	0.225	-0.027	-0.020	50181.444	9.925

Date:	8/2/2021	Span3-5ft-WB.lbsx	
Time:	3:01 PM	Bentley LEAP Bridge Steel [AASHTO LRFD 8th Ed. with 2017 Interims]	v21.00.00.28

FLEXURE RATING

POI Loc. (ft)	Moment Rating Factor	Vehicle Tonnage (Tons)	Rating Tonnage (Tons)	Moment/Stress Resistance (kip-in / ksi)	Controlling Equation	φc	φs	DC1 (kip-in / ksi)	DC2 (kip-in / ksi)	DW (kip-ft / ksi)	flDC1 (ksi)	flDC2 (ksi)	flDW (ksi)	LL (kip-in / ksi)	flLL (ksi)
188.600	3.232	59.995	193.924	229125.880	Equation 6.10.7.1.1-1	1	1	53831.875	8065.189	6033.317	0.186	-0.020	-0.015	42337.652	8.035
197.125	5.799	59.995	347.899	229125.880	Equation 6.10.7.1.1-1	1	1	33223.167	5011.097	3748.646	0.159	-0.002	-0.002	27951.244	4.323
209.400	140.899	59.995	8453.219	229125.880	Equation 6.10.7.1.1-1	1	1	390.655	60.731	45.431	0.127	0.027	0.020	333.558	1.179
209.500	999.990	59.995	59994.402	229125.880	Equation 6.10.7.1.1-1	1	1	0.000	0.000	0.000	0.000	0.000	0.000	0.000	0.000
209.600	142.806	59.995	8567.636	48.881	Equation 6.10.8.1.1-1 lateral torsion buckling	1	1	-0.002	0.001	0.001	0.100	0.021	0.016	-0.027	0.944
210.000	433.471	59.995	26006.113	48.881	Equation 6.10.8.1.1-1 lateral torsion buckling	1	1	0.000	-0.001	0.000	0.009	0.002	0.002	-0.005	0.324

SHEAR RATING

POI Loc. (ft)	Shear Rating Factor	Vehicle Tonnage (Tons)	Rating Tonnage (Tons)	Shear Resistance (kip)	Controlling Equation	φc	φs	DC1 (kip)	DC2 (kip)	DW (kip)	LL (kip)
0.000	28.794	59.995	1727.522	1685.625	Equation 6.10.9.1-1	1.000	1.000	-0.438	0.116	0.087	-58.532

SHEAR RATING

POI Loc. (ft)	Shear Rating Factor	Vehicle Tonnage (Tons)	Rating Tonnage (Tons)	Shear Resistance (kip)	Controlling Equation	φc	φs	DC1 (kip)	DC2 (kip)	DW (kip)	LL (kip)
0.400	13.570	59.995	814.119	1685.625	Equation 6.10.9.1-1	1.000	1.000	-1.666	-0.017	-0.013	124.344
0.500	6.823	59.995	409.355	1685.625	Equation 6.10.9.1-1	1.000	1.000	236.492	36.126	27.025	203.129
0.600	6.823	59.995	409.367	1685.625	Equation 6.10.9.1-1	1.000	1.000	236.462	36.121	27.021	203.129
11.500	2.450	59.995	146.981	761.178	Equation 6.10.9.1-1	1.000	1.000	213.259	32.359	24.207	200.562
21.400	2.887	59.995	173.224	761.178	Equation 6.10.9.1-1	1.000	1.000	192.860	28.934	21.644	179.316
23.000	2.915	59.995	174.871	761.178	Equation 6.10.9.1-1	1.000	1.000	189.900	28.382	21.232	178.974
25.900	5.077	59.995	304.566	1124.840	Equation 6.10.9.1-1	1.000	1.000	183.085	27.376	20.479	176.085
26.100	5.095	59.995	305.656	1124.840	Equation 6.10.9.1-1	1.000	1.000	182.343	27.305	20.426	175.627
34.500	2.886	59.995	173.135	678.990	Equation 6.10.9.1-1	1.000	1.000	164.663	24.399	18.252	163.446
41.900	3.236	59.995	194.130	678.990	Equation 6.10.9.1-1	1.000	1.000	149.518	21.838	16.337	151.833
42.000	4.725	59.995	283.503	904.929	Equation 6.10.9.1-1	1.000	1.000	149.335	21.804	16.311	151.833

SHEAR RATING

POI Loc. (ft)	Shear Rating Factor	Vehicle Tonnage (Tons)	Rating Tonnage (Tons)	Shear Resistance (kip)	Controlling Equation	φc	φs	DC1 (kip)	DC2 (kip)	DW (kip)	LL (kip)
42.100	4.736	59.995	284.116	904.929	Equation 6.10.9.1-1	1.000	1.000	148.698	21.765	16.282	151.654
42.300	4.750	59.995	284.992	904.929	Equation 6.10.9.1-1	1.000	1.000	148.301	21.697	16.230	151.297
46.000	3.851	59.995	231.056	747.024	Equation 6.10.9.1-1	1.000	1.000	140.355	20.416	15.273	148.258
57.500	4.468	59.995	268.050	747.024	Equation 6.10.9.1-1	1.000	1.000	112.475	16.454	12.309	135.587
63.200	4.876	59.995	292.530	747.024	Equation 6.10.9.1-1	1.000	1.000	99.752	14.480	10.832	127.558
69.000	5.161	59.995	309.633	747.024	Equation 6.10.9.1-1	1.000	1.000	86.717	12.466	9.325	123.720
80.500	5.762	59.995	345.716	747.024	Equation 6.10.9.1-1	1.000	1.000	58.241	8.503	6.361	116.951
84.100	6.146	59.995	368.718	747.024	Equation 6.10.9.1-1	1.000	1.000	50.156	7.256	5.428	111.325
92.000	6.855	59.995	411.238	742.922	Equation 6.10.9.1-1	1.000	1.000	32.483	4.512	3.375	102.495
103.625	7.858	59.995	471.465	742.922	Equation 6.10.9.1-1	1.000	1.000	3.551	0.508	0.380	93.974
105.000	8.145	59.995	488.660	742.922	Equation 6.10.9.1-1	1.000	1.000	0.334	0.031	0.023	91.164

SHEAR RATING

POI Loc. (ft)	Shear Rating Factor	Vehicle Tonnage (Tons)	Rating Tonnage (Tons)	Shear Resistance (kip)	Controlling Equation	φc	φs	DC1 (kip)	DC2 (kip)	DW (kip)	LL (kip)
115.250	7.675	59.995	460.441	742.922	Equation 6.10.9.1-1	1.000	1.000	-26.142	-3.527	-2.638	-92.592
125.900	6.680	59.995	400.756	747.024	Equation 6.10.9.1-1	1.000	1.000	-49.628	-7.219	-5.400	-102.514
126.750	6.526	59.995	391.501	747.024	Equation 6.10.9.1-1	1.000	1.000	-51.787	-7.515	-5.622	-104.527
138.250	5.674	59.995	340.421	747.024	Equation 6.10.9.1-1	1.000	1.000	-80.409	-11.473	-8.582	-113.948
146.800	5.201	59.995	312.022	747.024	Equation 6.10.9.1-1	1.000	1.000	-99.257	-14.433	-10.797	-119.700
149.750	4.714	59.995	282.809	747.024	Equation 6.10.9.1-1	1.000	1.000	-106.054	-15.455	-11.562	-130.244
161.250	4.070	59.995	244.164	747.024	Equation 6.10.9.1-1	1.000	1.000	-134.132	-19.410	-14.520	-142.260
167.700	4.384	59.995	263.039	831.150	Equation 6.10.9.1-1	1.000	1.000	-148.172	-21.645	-16.192	-147.147
167.900	4.376	59.995	262.514	831.150	Equation 6.10.9.1-1	1.000	1.000	-148.569	-21.714	-16.243	-147.323
168.000	2.982	59.995	178.928	626.874	Equation 6.10.9.1-1	1.000	1.000	-149.216	-21.751	-16.271	-147.411
168.100	2.981	59.995	178.829	626.874	Equation 6.10.9.1-1	1.000	1.000	-149.400	-21.786	-16.297	-147.411

SHEAR RATING

POI Loc. (ft)	Shear Rating Factor	Vehicle Tonnage (Tons)	Rating Tonnage (Tons)	Shear Resistance (kip)	Controlling Equation	φc	φs	DC1 (kip)	DC2 (kip)	DW (kip)	LL (kip)
172.750	2.801	59.995	168.032	626.874	Equation 6.10.9.1-1	1.000	1.000	-158.911	-23.393	-17.500	-152.484
183.900	8.170	59.995	490.178	1557.297	Equation 6.10.9.1-1	1.000	1.000	-182.125	-27.249	-20.384	-162.483
184.100	8.159	59.995	489.491	1557.297	Equation 6.10.9.1-1	1.000	1.000	-182.778	-27.315	-20.433	-162.617
184.250	2.701	59.995	162.034	684.644	Equation 6.10.9.1-1	1.000	1.000	-184.472	-27.354	-20.462	-167.490
188.600	2.627	59.995	157.630	684.644	Equation 6.10.9.1-1	1.000	1.000	-193.105	-28.858	-21.588	-167.884
197.125	2.250	59.995	135.013	684.644	Equation 6.10.9.1-1	1.000	1.000	-210.505	-31.803	-23.791	-185.986
209.400	6.931	59.995	415.822	1685.625	Equation 6.10.9.1-1	1.000	1.000	-236.513	-36.040	-26.960	-199.989
209.500	6.931	59.995	415.815	1685.625	Equation 6.10.9.1-1	1.000	1.000	-236.543	-36.046	-26.965	-199.986
209.600	13.860	59.995	831.526	1685.625	Equation 6.10.9.1-1	1.000	1.000	1.697	-0.017	-0.013	-121.739
210.000	385.972	59.995	23156.421	1685.625	Equation 6.10.9.1-1	1.000	1.000	0.469	-0.121	-0.090	-4.368

Design Inventory (Strength I) Design Inventory

Date:	8/2/2021	Span3-5ft-WB.lbsx	
Time:	3:01 PM	Bentley LEAP Bridge Steel [AASHTO LRFD 8th Ed. with 2017 Interims]	v21.00.00.28

FLEXURE RATING

POI Loc. (ft)	Moment Rating Factor	Vehicle Tonnage (Tons)	Rating Tonnage (Tons)	Moment/Stress Resistance (kip-in / ksi)	Controlling Equation	φc	φs	DC1 (kip-in / ksi)	DC2 (kip-in / ksi)	DW (kip-ft / ksi)	flDC1 (ksi)	flDC2 (ksi)	flDW (ksi)	LL (kip-in / ksi)	flLL (ksi)
0.000	338.236	---	---	48.881	Equation 6.10.8.1.1-1 lateral torsion buckling	1	1	0.000	0.000	0.000	0.011	0.001	0.001	-0.014	0.392
0.400	12.690	---	---	48.881	Equation 6.10.8.1.1-1 lateral torsion buckling	1	1	-0.002	0.001	0.000	0.096	0.017	0.013	-3.466	1.149
0.500	999.990	---	---	229125.880	Equation 6.10.7.1.1-1	1	1	0.000	0.000	0.000	0.000	0.000	0.000	0.000	0.000
0.600	8.113	---	---	48.881	Equation 6.10.8.1.1-1 lateral torsion buckling	1	1	0.184	0.006	0.005	0.110	0.019	0.014	-5.620	1.271
11.500	6.048	---	---	229125.880	Equation 6.10.7.1.1-1	1	1	29762.697	4456.877	3334.051	0.125	0.012	0.009	26328.050	5.300
21.400	2.717	---	---	229125.880	Equation 6.10.7.1.1-1	1	1	53859.574	8034.591	6010.428	0.129	0.006	0.004	48783.272	11.279
23.000	2.459	---	---	229125.880	Equation 6.10.7.1.1-1	1	1	57530.878	8575.963	6415.411	0.147	0.005	0.004	52358.670	12.245
25.900	2.004	---	---	229125.880	Equation 6.10.7.1.1-1	1	1	63992.774	9538.096	7135.153	0.251	0.001	0.001	59267.376	16.300
26.100	2.852	---	---	286159.759	Equation 6.10.7.1.1-1	1	1	64424.454	9582.388	7168.287	0.152	0.000	0.000	59732.190	9.288

Date:	8/2/2021	Span3-5ft-WB.lbsx	
Time:	3:01 PM	Bentley LEAP Bridge Steel [AASHTO LRFD 8th Ed. with 2017 Interims]	v21.00.00.28

FLEXURE RATING

POI Loc. (ft)	Moment Rating Factor	Vehicle Tonnage (Tons)	Rating Tonnage (Tons)	Moment/Stress Resistance (kip-in / ksi)	Controlling Equation	φc	φs	DC1 (kip-in / ksi)	DC2 (kip-in / ksi)	DW (kip-ft / ksi)	flDC1 (ksi)	flDC2 (ksi)	flDW (ksi)	LL (kip-in / ksi)	flLL (ksi)
34.500	2.299	---	---	286159.759	Equation 6.10.7.1.1-1	1	1	81905.424	12149.673	9088.793	0.210	-0.010	-0.007	75647.788	3.088
41.900	1.762	---	---	286159.759	Equation 6.10.7.1.1-1	1	1	95837.646	14181.834	10608.990	0.274	-0.018	-0.014	89291.856	3.710
42.000	2.726	---	---	370690.549	Equation 6.10.7.1.1-1	1	1	96019.119	14186.515	10612.491	0.078	-0.005	-0.004	89482.260	1.089
42.100	2.718	---	---	370690.549	Equation 6.10.7.1.1-1	1	1	96197.498	14212.621	10632.021	0.076	-0.005	-0.004	89619.180	1.112
42.300	2.702	---	---	370690.549	Equation 6.10.7.1.1-1	1	1	96553.230	14264.647	10670.940	0.076	-0.005	-0.004	89893.020	1.158
46.000	2.415	---	---	370690.549	Equation 6.10.7.1.1-1	1	1	102956.099	15188.968	11362.395	0.058	-0.005	-0.004	95815.650	2.046
57.500	1.899	---	---	370690.549	Equation 6.10.7.1.1-1	1	1	120191.029	17701.957	13242.284	0.138	-0.009	-0.007	111984.810	1.821
63.200	1.730	---	---	370690.549	Equation 6.10.7.1.1-1	1	1	127421.489	18748.428	14025.117	0.136	-0.009	-0.007	118430.356	1.639
69.000	1.581	---	---	370690.549	Equation 6.10.7.1.1-1	1	1	133884.639	19665.240	14710.957	0.119	-0.010	-0.007	124645.710	1.706
80.500	1.380	---	---	370690.549	Equation 6.10.7.1.1-1	1	1	143635.002	21088.156	15775.393	0.195	-0.013	-0.010	133943.040	1.918
84.100	1.326	---	---	370690.549	Equation 6.10.7.1.1-1	1	1	145959.582	21424.476	16026.984	0.190	-0.013	-0.010	137338.399	1.973

Date:	8/2/2021	Span3-5ft-WB.lbsx	
Time:	3:01 PM	Bentley LEAP Bridge Steel [AASHTO LRFD 8th Ed. with 2017 Interims]	v21.00.00.28

FLEXURE RATING

POI Loc. (ft)	Moment Rating Factor	Vehicle Tonnage (Tons)	Rating Tonnage (Tons)	Moment/Stress Resistance (kip-in / ksi)	Controlling Equation	φc	φs	DC1 (kip-in / ksi)	DC2 (kip-in / ksi)	DW (kip-ft / ksi)	flDC1 (ksi)	flDC2 (ksi)	flDW (ksi)	LL (kip-in / ksi)	flLL (ksi)
92.000	1.256	---	---	370690.549	Equation 6.10.7.1.1-1	1	1	149845.478	21967.749	16433.391	0.140	-0.011	-0.008	140983.500	2.191
103.625	1.218	---	---	370690.549	Equation 6.10.7.1.1-1	1	1	152093.108	22310.120	16689.508	0.220	-0.015	-0.011	143014.200	2.251
105.000	1.218	---	---	370690.549	Equation 6.10.7.1.1-1	1	1	152118.589	22314.073	16692.466	0.219	-0.015	-0.011	142958.164	2.243
115.250	1.241	---	---	370690.549	Equation 6.10.7.1.1-1	1	1	150747.323	22100.133	16532.423	0.132	-0.010	-0.008	142182.390	2.019
125.900	1.323	---	---	370690.549	Equation 6.10.7.1.1-1	1	1	145945.003	21426.747	16028.684	0.201	-0.013	-0.010	137393.336	2.075
126.750	1.331	---	---	370690.549	Equation 6.10.7.1.1-1	1	1	145431.904	21351.915	15972.703	0.201	-0.013	-0.010	137027.520	2.086
138.250	1.494	---	---	370690.549	Equation 6.10.7.1.1-1	1	1	136576.632	20060.347	15006.521	0.112	-0.009	-0.006	129682.350	1.808
146.800	1.684	---	---	370690.549	Equation 6.10.7.1.1-1	1	1	127394.947	18754.161	14029.405	0.149	-0.009	-0.007	122342.218	1.312
149.750	1.772	---	---	370690.549	Equation 6.10.7.1.1-1	1	1	123773.711	18230.259	13637.492	0.147	-0.009	-0.007	119050.050	1.115
161.250	2.235	---	---	370690.549	Equation 6.10.7.1.1-1	1	1	107430.094	15851.805	11858.244	0.064	-0.004	-0.003	103486.320	0.942
167.700	2.611	---	---	370690.549	Equation 6.10.7.1.1-1	1	1	96522.467	14279.240	10681.856	0.102	-0.007	-0.005	92860.731	1.274

Date:	8/2/2021	Span3-5ft-WB.lbsx	
Time:	3:01 PM	Bentley LEAP Bridge Steel [AASHTO LRFD 8th Ed. with 2017 Interims]	v21.00.00.28

FLEXURE RATING

POI Loc. (ft)	Moment Rating Factor	Vehicle Tonnage (Tons)	Rating Tonnage (Tons)	Moment/Stress Resistance (kip-in / ksi)	Controlling Equation	φc	φs	DC1 (kip-in / ksi)	DC2 (kip-in / ksi)	DW (kip-ft / ksi)	flDC1 (ksi)	flDC2 (ksi)	flDW (ksi)	LL (kip-in / ksi)	flLL (ksi)
167.900	2.622	---	---	370690.549	Equation 6.10.7.1.1-1	1	1	96166.783	14227.277	10642.984	0.103	-0.007	-0.005	92565.897	1.308
168.000	1.687	---	---	286159.759	Equation 6.10.7.1.1-1	1	1	95988.577	14201.904	10624.003	0.351	-0.024	-0.018	92418.480	4.442
168.100	1.691	---	---	286159.759	Equation 6.10.7.1.1-1	1	1	95807.313	14197.550	10620.746	0.350	-0.024	-0.018	92237.303	4.481
172.750	1.927	---	---	286159.759	Equation 6.10.7.1.1-1	1	1	87221.995	12947.674	9685.753	0.297	-0.024	-0.018	83818.508	6.072
183.900	2.607	---	---	286159.759	Equation 6.10.7.1.1-1	1	1	64430.821	9601.458	7182.553	0.202	-0.025	-0.019	62750.772	12.140
184.100	1.822	---	---	229125.880	Equation 6.10.7.1.1-1	1	1	63994.415	9558.492	7150.411	0.337	-0.042	-0.031	62453.790	20.957
184.250	1.998	---	---	229125.880	Equation 6.10.7.1.1-1	1	1	63665.963	9512.036	7115.659	0.226	-0.027	-0.020	62153.490	13.585
188.600	2.564	---	---	229125.880	Equation 6.10.7.1.1-1	1	1	53831.875	8065.189	6033.317	0.187	-0.020	-0.015	52564.806	11.001
197.125	4.680	---	---	229125.880	Equation 6.10.7.1.1-1	1	1	33223.167	5011.097	3748.646	0.159	-0.002	-0.002	34051.689	5.945
209.400	107.539	---	---	229125.880	Equation 6.10.7.1.1-1	1	1	390.655	60.731	45.431	0.128	0.027	0.020	399.797	1.579
209.500	999.990	---	---	229125.880	Equation 6.10.7.1.1-1	1	1	0.000	0.000	0.000	0.000	0.000	0.000	0.000	0.000

Date:	8/2/2021	Span3-5ft-WB.lbsx	
Time:	3:01 PM	Bentley LEAP Bridge Steel [AASHTO LRFD 8th Ed. with 2017 Interims]	v21.00.00.28

FLEXURE RATING

POI Loc. (ft)	Moment Rating Factor	Vehicle Tonnage (Tons)	Rating Tonnage (Tons)	Moment/Stress Resistance (kip-in / ksi)	Controlling Equation	φc	φs	DC1 (kip-in / ksi)	DC2 (kip-in / ksi)	DW (kip-ft / ksi)	flDC1 (ksi)	flDC2 (ksi)	flDW (ksi)	LL (kip-in / ksi)	flLL (ksi)
209.600	108.851	---	---	48.881	Equation 6.10.8.1.1-1 lateral torsion buckling	1	1	-0.002	0.001	0.001	0.100	0.021	0.016	-0.027	1.266
210.000	327.300	---	---	48.881	Equation 6.10.8.1.1-1 lateral torsion buckling	1	1	0.000	-0.001	0.000	0.009	0.002	0.002	-0.004	0.435

SHEAR RATING

POI Loc. (ft)	Shear Rating Factor	Vehicle Tonnage (Tons)	Rating Tonnage (Tons)	Shear Resistance (kip)	Controlling Equation	φc	φs	DC1 (kip)	DC2 (kip)	DW (kip)	LL (kip)
0.000	34.748	---	---	1685.625	Equation 6.10.9.1-1	1.000	1.000	-0.438	0.116	0.087	-48.503
0.400	11.040	---	---	1685.625	Equation 6.10.9.1-1	1.000	1.000	-1.666	-0.017	-0.013	152.833
0.500	5.547	---	---	1685.625	Equation 6.10.9.1-1	1.000	1.000	236.492	36.126	27.025	249.851
0.600	5.547	---	---	1685.625	Equation 6.10.9.1-1	1.000	1.000	236.462	36.121	27.021	249.851
11.500	2.064	---	---	761.178	Equation 6.10.9.1-1	1.000	1.000	213.259	32.359	24.207	238.046

SHEAR RATING

POI Loc. (ft)	Shear Rating Factor	Vehicle Tonnage (Tons)	Rating Tonnage (Tons)	Shear Resistance (kip)	Controlling Equation	φc	φs	DC1 (kip)	DC2 (kip)	DW (kip)	LL (kip)
21.400	2.404	---	---	761.178	Equation 6.10.9.1-1	1.000	1.000	192.860	28.934	21.644	215.407
23.000	2.436	---	---	761.178	Equation 6.10.9.1-1	1.000	1.000	189.900	28.382	21.232	214.179
25.900	4.324	---	---	1124.840	Equation 6.10.9.1-1	1.000	1.000	183.085	27.376	20.479	206.740
26.100	4.337	---	---	1124.840	Equation 6.10.9.1-1	1.000	1.000	182.343	27.305	20.426	206.299
34.500	2.452	---	---	678.990	Equation 6.10.9.1-1	1.000	1.000	164.663	24.399	18.252	192.383
41.900	2.745	---	---	678.990	Equation 6.10.9.1-1	1.000	1.000	149.518	21.838	16.337	178.994
42.000	4.008	---	---	904.929	Equation 6.10.9.1-1	1.000	1.000	149.335	21.804	16.311	178.994
42.100	4.018	---	---	904.929	Equation 6.10.9.1-1	1.000	1.000	148.698	21.765	16.282	178.737
42.300	4.033	---	---	904.929	Equation 6.10.9.1-1	1.000	1.000	148.301	21.697	16.230	178.225
46.000	3.284	---	---	747.024	Equation 6.10.9.1-1	1.000	1.000	140.355	20.416	15.273	173.870
57.500	3.884	---	---	747.024	Equation 6.10.9.1-1	1.000	1.000	112.475	16.454	12.309	155.963

SHEAR RATING

POI Loc. (ft)	Shear Rating Factor	Vehicle Tonnage (Tons)	Rating Tonnage (Tons)	Shear Resistance (kip)	Controlling Equation	φc	φs	DC1 (kip)	DC2 (kip)	DW (kip)	LL (kip)
63.200	4.252	---	---	747.024	Equation 6.10.9.1-1	1.000	1.000	99.752	14.480	10.832	146.260
69.000	4.555	---	---	747.024	Equation 6.10.9.1-1	1.000	1.000	86.717	12.466	9.325	140.182
80.500	5.366	---	---	747.024	Equation 6.10.9.1-1	1.000	1.000	58.241	8.503	6.361	125.594
84.100	5.738	---	---	747.024	Equation 6.10.9.1-1	1.000	1.000	50.156	7.256	5.428	119.234
92.000	6.446	---	---	742.922	Equation 6.10.9.1-1	1.000	1.000	32.483	4.512	3.375	108.997
103.625	7.587	---	---	742.922	Equation 6.10.9.1-1	1.000	1.000	3.551	0.508	0.380	97.329
105.000	7.836	---	---	742.922	Equation 6.10.9.1-1	1.000	1.000	0.334	0.031	0.023	94.762
115.250	7.370	---	---	742.922	Equation 6.10.9.1-1	1.000	1.000	-26.142	-3.527	-2.638	-96.416
125.900	6.300	---	---	747.024	Equation 6.10.9.1-1	1.000	1.000	-49.628	-7.219	-5.400	-108.690
126.750	6.164	---	---	747.024	Equation 6.10.9.1-1	1.000	1.000	-51.787	-7.515	-5.622	-110.668
138.250	5.078	---	---	747.024	Equation 6.10.9.1-1	1.000	1.000	-80.409	-11.473	-8.582	-127.327

SHEAR RATING

POI Loc. (ft)	Shear Rating Factor	Vehicle Tonnage (Tons)	Rating Tonnage (Tons)	Shear Resistance (kip)	Controlling Equation	φc	φs	DC1 (kip)	DC2 (kip)	DW (kip)	LL (kip)
146.800	4.541	---	---	747.024	Equation 6.10.9.1-1	1.000	1.000	-99.257	-14.433	-10.797	-137.095
149.750	4.165	---	---	747.024	Equation 6.10.9.1-1	1.000	1.000	-106.054	-15.455	-11.562	-147.408
161.250	3.484	---	---	747.024	Equation 6.10.9.1-1	1.000	1.000	-134.132	-19.410	-14.520	-166.180
167.700	3.707	---	---	831.150	Equation 6.10.9.1-1	1.000	1.000	-148.172	-21.645	-16.192	-174.035
167.900	3.695	---	---	831.150	Equation 6.10.9.1-1	1.000	1.000	-148.569	-21.714	-16.243	-174.439
168.000	2.517	---	---	626.874	Equation 6.10.9.1-1	1.000	1.000	-149.216	-21.751	-16.271	-174.641
168.100	2.516	---	---	626.874	Equation 6.10.9.1-1	1.000	1.000	-149.400	-21.786	-16.297	-174.641
172.750	2.360	---	---	626.874	Equation 6.10.9.1-1	1.000	1.000	-158.911	-23.393	-17.500	-180.947
183.900	6.780	---	---	1557.297	Equation 6.10.9.1-1	1.000	1.000	-182.125	-27.249	-20.384	-195.805
184.100	6.771	---	---	1557.297	Equation 6.10.9.1-1	1.000	1.000	-182.778	-27.315	-20.433	-195.956
184.250	2.273	---	---	684.644	Equation 6.10.9.1-1	1.000	1.000	-184.472	-27.354	-20.462	-199.012

SHEAR RATING

POI Loc. (ft)	Shear Rating Factor	Vehicle Tonnage (Tons)	Rating Tonnage (Tons)	Shear Resistance (kip)	Controlling Equation	φc	φs	DC1 (kip)	DC2 (kip)	DW (kip)	LL (kip)
188.600	2.181	---	---	684.644	Equation 6.10.9.1-1	1.000	1.000	-193.105	-28.858	-21.588	-202.267
197.125	1.874	---	---	684.644	Equation 6.10.9.1-1	1.000	1.000	-210.505	-31.803	-23.791	-223.332
209.400	5.705	---	---	1685.625	Equation 6.10.9.1-1	1.000	1.000	-236.513	-36.040	-26.960	-242.960
209.500	5.705	---	---	1685.625	Equation 6.10.9.1-1	1.000	1.000	-236.543	-36.046	-26.965	-242.960
209.600	11.429	---	---	1685.625	Equation 6.10.9.1-1	1.000	1.000	1.697	-0.017	-0.013	-147.627
210.000	364.165	---	---	1685.625	Equation 6.10.9.1-1	1.000	1.000	0.469	-0.121	-0.090	-4.629

Design Operating (Strength I) **Design Operating**

FLEXURE RATING

POI Loc. (ft)	Moment Rating Factor	Vehicle Tonnage (Tons)	Rating Tonnage (Tons)	Moment/Stress Resistance (kip-in / ksi)	Controlling Equation	φc	φs	DC1 (kip-in / ksi)	DC2 (kip-in / ksi)	DW (kip-ft / ksi)	flDC1 (ksi)	flDC2 (ksi)	flDW (ksi)	LL (kip-in / ksi)	flLL (ksi)
0.000	440.400	---	---	48.881	Equation 6.10.8.1.1-1 lateral torsion buckling	1	1	0.000	0.000	0.000	0.011	0.001	0.001	-0.011	0.301

Date:	8/2/2021	Span3-5ft-WB.lbsx	
Time:	3:01 PM	Bentley LEAP Bridge Steel [AASHTO LRFD 8th Ed. with 2017 Interims]	v21.00.00.28

FLEXURE RATING

POI Loc. (ft)	Moment Rating Factor	Vehicle Tonnage (Tons)	Rating Tonnage (Tons)	Moment/Stress Resistance (kip-in / ksi)	Controlling Equation	φc	φs	DC1 (kip-in / ksi)	DC2 (kip-in / ksi)	DW (kip-ft / ksi)	flDC1 (ksi)	flDC2 (ksi)	flDW (ksi)	LL (kip-in / ksi)	flLL (ksi)
0.400	16.457	---	---	48.881	Equation 6.10.8.1.1-1 lateral torsion buckling	1	1	-0.002	0.001	0.000	0.095	0.017	0.013	-2.673	0.882
0.500	999.990	---	---	229125.880	Equation 6.10.7.1.1-1	1	1	0.000	0.000	0.000	0.000	0.000	0.000	0.000	0.000
0.600	10.520	---	---	48.881	Equation 6.10.8.1.1-1 lateral torsion buckling	1	1	0.184	0.006	0.005	0.110	0.019	0.014	-4.335	0.976
11.500	7.845	---	---	229125.880	Equation 6.10.7.1.1-1	1	1	29762.697	4456.877	3334.051	0.125	0.012	0.009	20310.210	4.074
21.400	3.524	---	---	229125.880	Equation 6.10.7.1.1-1	1	1	53859.574	8034.591	6010.428	0.128	0.006	0.004	37632.810	8.670
23.000	3.189	---	---	229125.880	Equation 6.10.7.1.1-1	1	1	57530.878	8575.963	6415.411	0.147	0.005	0.004	40390.974	9.413
25.900	2.606	---	---	229125.880	Equation 6.10.7.1.1-1	1	1	63992.774	9538.096	7135.153	0.247	0.001	0.001	45720.547	12.381
26.100	3.707	---	---	286159.759	Equation 6.10.7.1.1-1	1	1	64424.454	9582.388	7168.287	0.149	0.000	0.000	46079.118	7.051
34.500	2.982	---	---	286159.759	Equation 6.10.7.1.1-1	1	1	81905.424	12149.673	9088.793	0.207	-0.010	-0.007	58356.865	2.345
41.900	2.286	---	---	286159.759	Equation 6.10.7.1.1-1	1	1	95837.646	14181.834	10608.990	0.268	-0.018	-0.013	68882.289	2.798

Date:	8/2/2021	Span3-5ft-WB.lbsx	
Time:	3:01 PM	Bentley LEAP Bridge Steel [AASHTO LRFD 8th Ed. with 2017 Interims]	v21.00.00.28

FLEXURE RATING

POI Loc. (ft)	Moment Rating Factor	Vehicle Tonnage (Tons)	Rating Tonnage (Tons)	Moment/Stress Resistance (kip-in / ksi)	Controlling Equation	φc	φs	DC1 (kip-in / ksi)	DC2 (kip-in / ksi)	DW (kip-ft / ksi)	flDC1 (ksi)	flDC2 (ksi)	flDW (ksi)	LL (kip-in / ksi)	flLL (ksi)
42.000	3.534	---	---	370690.549	Equation 6.10.7.1.1-1	1	1	96019.119	14186.515	10612.491	0.078	-0.005	-0.004	69029.172	0.833
42.100	3.524	---	---	370690.549	Equation 6.10.7.1.1-1	1	1	96197.498	14212.621	10632.021	0.076	-0.005	-0.004	69134.796	0.851
42.300	3.504	---	---	370690.549	Equation 6.10.7.1.1-1	1	1	96553.230	14264.647	10670.940	0.075	-0.005	-0.004	69346.044	0.885
46.000	3.133	---	---	370690.549	Equation 6.10.7.1.1-1	1	1	102956.099	15188.968	11362.395	0.057	-0.005	-0.004	73914.930	1.554
57.500	2.463	---	---	370690.549	Equation 6.10.7.1.1-1	1	1	120191.029	17701.957	13242.284	0.136	-0.009	-0.007	86388.282	1.383
63.200	2.243	---	---	370690.549	Equation 6.10.7.1.1-1	1	1	127421.489	18748.428	14025.117	0.134	-0.009	-0.007	91360.561	1.245
69.000	2.051	---	---	370690.549	Equation 6.10.7.1.1-1	1	1	133884.639	19665.240	14710.957	0.116	-0.009	-0.007	96155.262	1.288
80.500	1.790	---	---	370690.549	Equation 6.10.7.1.1-1	1	1	143635.002	21088.156	15775.393	0.191	-0.013	-0.009	103327.488	1.448
84.100	1.719	---	---	370690.549	Equation 6.10.7.1.1-1	1	1	145959.582	21424.476	16026.984	0.186	-0.013	-0.009	105946.765	1.490
92.000	1.629	---	---	370690.549	Equation 6.10.7.1.1-1	1	1	149845.478	21967.749	16433.391	0.136	-0.011	-0.008	108758.700	1.648
103.625	1.580	---	---	370690.549	Equation 6.10.7.1.1-1	1	1	152093.108	22310.120	16689.508	0.214	-0.014	-0.011	110325.240	1.694

Date:	8/2/2021	Span3-5ft-WB.lbsx	
Time:	3:01 PM	Bentley LEAP Bridge Steel [AASHTO LRFD 8th Ed. with 2017 Interims]	v21.00.00.28

FLEXURE RATING

POI Loc. (ft)	Moment Rating Factor	Vehicle Tonnage (Tons)	Rating Tonnage (Tons)	Moment/Stress Resistance (kip-in / ksi)	Controlling Equation	φc	φs	DC1 (kip-in / ksi)	DC2 (kip-in / ksi)	DW (kip-ft / ksi)	flDC1 (ksi)	flDC2 (ksi)	flDW (ksi)	LL (kip-in / ksi)	flLL (ksi)
105.000	1.580	---	---	370690.549	Equation 6.10.7.1.1-1	1	1	152118.589	22314.073	16692.466	0.213	-0.014	-0.011	110282.012	1.688
115.250	1.609	---	---	370690.549	Equation 6.10.7.1.1-1	1	1	150747.323	22100.133	16532.423	0.129	-0.010	-0.008	109683.558	1.523
125.900	1.716	---	---	370690.549	Equation 6.10.7.1.1-1	1	1	145945.003	21426.747	16028.684	0.196	-0.013	-0.010	105989.145	1.566
126.750	1.727	---	---	370690.549	Equation 6.10.7.1.1-1	1	1	145431.904	21351.915	15972.703	0.197	-0.013	-0.010	105706.944	1.574
138.250	1.938	---	---	370690.549	Equation 6.10.7.1.1-1	1	1	136576.632	20060.347	15006.521	0.110	-0.008	-0.006	100040.670	1.371
146.800	2.184	---	---	370690.549	Equation 6.10.7.1.1-1	1	1	127394.947	18754.161	14029.405	0.147	-0.009	-0.007	94378.283	0.995
149.750	2.298	---	---	370690.549	Equation 6.10.7.1.1-1	1	1	123773.711	18230.259	13637.492	0.145	-0.009	-0.006	91838.610	0.846
161.250	2.898	---	---	370690.549	Equation 6.10.7.1.1-1	1	1	107430.094	15851.805	11858.244	0.064	-0.004	-0.003	79832.304	0.720
167.700	3.386	---	---	370690.549	Equation 6.10.7.1.1-1	1	1	96522.467	14279.240	10681.856	0.101	-0.007	-0.005	71635.421	0.973
167.900	3.400	---	---	370690.549	Equation 6.10.7.1.1-1	1	1	96166.783	14227.277	10642.984	0.102	-0.007	-0.005	71407.978	0.999
168.000	2.190	---	---	286159.759	Equation 6.10.7.1.1-1	1	1	95988.577	14201.904	10624.003	0.342	-0.024	-0.018	71294.256	3.340

Date:	8/2/2021	Span3-5ft-WB.lbsx	
Time:	3:01 PM	Bentley LEAP Bridge Steel [AASHTO LRFD 8th Ed. with 2017 Interims]	v21.00.00.28

FLEXURE RATING

POI Loc. (ft)	Moment Rating Factor	Vehicle Tonnage (Tons)	Rating Tonnage (Tons)	Moment/Stress Resistance (kip-in / ksi)	Controlling Equation	φc	φs	DC1 (kip-in / ksi)	DC2 (kip-in / ksi)	DW (kip-ft / ksi)	flDC1 (ksi)	flDC2 (ksi)	flDW (ksi)	LL (kip-in / ksi)	flLL (ksi)
168.100	2.195	---	---	286159.759	Equation 6.10.7.1.1-1	1	1	95807.313	14197.550	10620.746	0.341	-0.024	-0.018	71154.491	3.370
172.750	2.502	---	---	286159.759	Equation 6.10.7.1.1-1	1	1	87221.995	12947.674	9685.753	0.290	-0.023	-0.017	64659.992	4.588
183.900	3.394	---	---	286159.759	Equation 6.10.7.1.1-1	1	1	64430.821	9601.458	7182.553	0.197	-0.024	-0.018	48407.738	9.169
184.100	2.372	---	---	229125.880	Equation 6.10.7.1.1-1	1	1	63994.415	9558.492	7150.411	0.331	-0.041	-0.031	48178.638	15.869
184.250	2.593	---	---	229125.880	Equation 6.10.7.1.1-1	1	1	63665.963	9512.036	7115.659	0.225	-0.027	-0.020	47946.978	10.411
188.600	3.327	---	---	229125.880	Equation 6.10.7.1.1-1	1	1	53831.875	8065.189	6033.317	0.186	-0.020	-0.015	40549.994	8.431
197.125	6.072	---	---	229125.880	Equation 6.10.7.1.1-1	1	1	33223.167	5011.097	3748.646	0.158	-0.002	-0.002	26268.446	4.557
209.400	140.139	---	---	229125.880	Equation 6.10.7.1.1-1	1	1	390.655	60.731	45.431	0.127	0.027	0.020	308.414	1.210
209.500	999.990	---	---	229125.880	Equation 6.10.7.1.1-1	1	1	0.000	0.000	0.000	0.000	0.000	0.000	0.000	0.000
209.600	142.161	---	---	48.881	Equation 6.10.8.1.1-1 lateral torsion buckling	1	1	-0.002	0.001	0.001	0.100	0.021	0.016	-0.021	0.969

Date:	8/2/2021	Span3-5ft-WB.lbsx	
Time:	3:01 PM	Bentley LEAP Bridge Steel [AASHTO LRFD 8th Ed. with 2017 Interims]	v21.00.00.28

FLEXURE RATING

POI Loc. (ft)	Moment Rating Factor	Vehicle Tonnage (Tons)	Rating Tonnage (Tons)	Moment/Stress Resistance (kip-in / ksi)	Controlling Equation	φc	φs	DC1 (kip-in / ksi)	DC2 (kip-in / ksi)	DW (kip-ft / ksi)	flDC1 (ksi)	flDC2 (ksi)	flDW (ksi)	LL (kip-in / ksi)	flLL (ksi)
210.000	427.558	---	---	48.881	Equation 6.10.8.1.1-1 lateral torsion buckling	1	1	0.000	-0.001	0.000	0.009	0.002	0.002	-0.003	0.333

SHEAR RATING

POI Loc. (ft)	Shear Rating Factor	Vehicle Tonnage (Tons)	Rating Tonnage (Tons)	Shear Resistance (kip)	Controlling Equation	φc	φs	DC1 (kip)	DC2 (kip)	DW (kip)	LL (kip)
0.000	45.044	---	---	1685.625	Equation 6.10.9.1-1	1.000	1.000	-0.438	0.116	0.087	-37.416
0.400	14.312	---	---	1685.625	Equation 6.10.9.1-1	1.000	1.000	-1.666	-0.017	-0.013	117.900
0.500	7.191	---	---	1685.625	Equation 6.10.9.1-1	1.000	1.000	236.492	36.126	27.025	192.742
0.600	7.191	---	---	1685.625	Equation 6.10.9.1-1	1.000	1.000	236.462	36.121	27.021	192.742
11.500	2.676	---	---	761.178	Equation 6.10.9.1-1	1.000	1.000	213.259	32.359	24.207	183.635
21.400	3.116	---	---	761.178	Equation 6.10.9.1-1	1.000	1.000	192.860	28.934	21.644	166.171
23.000	3.157	---	---	761.178	Equation 6.10.9.1-1	1.000	1.000	189.900	28.382	21.232	165.224

SHEAR RATING

POI Loc. (ft)	Shear Rating Factor	Vehicle Tonnage (Tons)	Rating Tonnage (Tons)	Shear Resistance (kip)	Controlling Equation	φc	φs	DC1 (kip)	DC2 (kip)	DW (kip)	LL (kip)
25.900	5.605	---	---	1124.840	Equation 6.10.9.1-1	1.000	1.000	183.085	27.376	20.479	159.485
26.100	5.622	---	---	1124.840	Equation 6.10.9.1-1	1.000	1.000	182.343	27.305	20.426	159.145
34.500	3.178	---	---	678.990	Equation 6.10.9.1-1	1.000	1.000	164.663	24.399	18.252	148.410
41.900	3.558	---	---	678.990	Equation 6.10.9.1-1	1.000	1.000	149.518	21.838	16.337	138.081
42.000	5.196	---	---	904.929	Equation 6.10.9.1-1	1.000	1.000	149.335	21.804	16.311	138.081
42.100	5.209	---	---	904.929	Equation 6.10.9.1-1	1.000	1.000	148.698	21.765	16.282	137.883
42.300	5.227	---	---	904.929	Equation 6.10.9.1-1	1.000	1.000	148.301	21.697	16.230	137.488
46.000	4.257	---	---	747.024	Equation 6.10.9.1-1	1.000	1.000	140.355	20.416	15.273	134.128
57.500	5.035	---	---	747.024	Equation 6.10.9.1-1	1.000	1.000	112.475	16.454	12.309	120.314
63.200	5.512	---	---	747.024	Equation 6.10.9.1-1	1.000	1.000	99.752	14.480	10.832	112.830
69.000	5.905	---	---	747.024	Equation 6.10.9.1-1	1.000	1.000	86.717	12.466	9.325	108.140

SHEAR RATING

POI Loc. (ft)	Shear Rating Factor	Vehicle Tonnage (Tons)	Rating Tonnage (Tons)	Shear Resistance (kip)	Controlling Equation	φc	φs	DC1 (kip)	DC2 (kip)	DW (kip)	LL (kip)
80.500	6.956	---	---	747.024	Equation 6.10.9.1-1	1.000	1.000	58.241	8.503	6.361	96.887
84.100	7.438	---	---	747.024	Equation 6.10.9.1-1	1.000	1.000	50.156	7.256	5.428	91.981
92.000	8.355	---	---	742.922	Equation 6.10.9.1-1	1.000	1.000	32.483	4.512	3.375	84.084
103.625	9.836	---	---	742.922	Equation 6.10.9.1-1	1.000	1.000	3.551	0.508	0.380	75.082
105.000	10.157	---	---	742.922	Equation 6.10.9.1-1	1.000	1.000	0.334	0.031	0.023	73.102
115.250	9.554	---	---	742.922	Equation 6.10.9.1-1	1.000	1.000	-26.142	-3.527	-2.638	-74.378
125.900	8.167	---	---	747.024	Equation 6.10.9.1-1	1.000	1.000	-49.628	-7.219	-5.400	-83.846
126.750	7.990	---	---	747.024	Equation 6.10.9.1-1	1.000	1.000	-51.787	-7.515	-5.622	-85.372
138.250	6.583	---	---	747.024	Equation 6.10.9.1-1	1.000	1.000	-80.409	-11.473	-8.582	-98.224
146.800	5.886	---	---	747.024	Equation 6.10.9.1-1	1.000	1.000	-99.257	-14.433	-10.797	-105.759
149.750	5.399	---	---	747.024	Equation 6.10.9.1-1	1.000	1.000	-106.054	-15.455	-11.562	-113.715

SHEAR RATING

POI Loc. (ft)	Shear Rating Factor	Vehicle Tonnage (Tons)	Rating Tonnage (Tons)	Shear Resistance (kip)	Controlling Equation	φc	φs	DC1 (kip)	DC2 (kip)	DW (kip)	LL (kip)
161.250	4.516	---	---	747.024	Equation 6.10.9.1-1	1.000	1.000	-134.132	-19.410	-14.520	-128.196
167.700	4.805	---	---	831.150	Equation 6.10.9.1-1	1.000	1.000	-148.172	-21.645	-16.192	-134.255
167.900	4.790	---	---	831.150	Equation 6.10.9.1-1	1.000	1.000	-148.569	-21.714	-16.243	-134.567
168.000	3.263	---	---	626.874	Equation 6.10.9.1-1	1.000	1.000	-149.216	-21.751	-16.271	-134.723
168.100	3.261	---	---	626.874	Equation 6.10.9.1-1	1.000	1.000	-149.400	-21.786	-16.297	-134.723
172.750	3.060	---	---	626.874	Equation 6.10.9.1-1	1.000	1.000	-158.911	-23.393	-17.500	-139.587
183.900	8.789	---	---	1557.297	Equation 6.10.9.1-1	1.000	1.000	-182.125	-27.249	-20.384	-151.049
184.100	8.777	---	---	1557.297	Equation 6.10.9.1-1	1.000	1.000	-182.778	-27.315	-20.433	-151.166
184.250	2.946	---	---	684.644	Equation 6.10.9.1-1	1.000	1.000	-184.472	-27.354	-20.462	-153.523
188.600	2.827	---	---	684.644	Equation 6.10.9.1-1	1.000	1.000	-193.105	-28.858	-21.588	-156.035
197.125	2.429	---	---	684.644	Equation 6.10.9.1-1	1.000	1.000	-210.505	-31.803	-23.791	-172.284

SHEAR RATING

POI Loc. (ft)	Shear Rating Factor	Vehicle Tonnage (Tons)	Rating Tonnage (Tons)	Shear Resistance (kip)	Controlling Equation	φc	φs	DC1 (kip)	DC2 (kip)	DW (kip)	LL (kip)
209.400	7.396	---	---	1685.625	Equation 6.10.9.1-1	1.000	1.000	-236.513	-36.040	-26.960	-187.426
209.500	7.395	---	---	1685.625	Equation 6.10.9.1-1	1.000	1.000	-236.543	-36.046	-26.965	-187.426
209.600	14.816	---	---	1685.625	Equation 6.10.9.1-1	1.000	1.000	1.697	-0.017	-0.013	-113.884
210.000	472.066	---	---	1685.625	Equation 6.10.9.1-1	1.000	1.000	0.469	-0.121	-0.090	-3.571

SUMMARY REPORT

Load Rating Combination	Controlling POI Loc. (ft)	Based on	Controlling Equation	Rating Factor	Vehicle Tonnage (Tons)	Rating Tonnage (Tons)
Design Inventory	103.625	Flexure	Equation 6.10.7.1.1-1	1.218	---	---
Design Operating	103.625	Flexure	Equation 6.10.7.1.1-1	1.580	---	---
Permit	103.625	Flexure	Equation 6.10.7.1.1-1	1.520	59.995	91.214

Group01 Member 02

Design Inventory (Strength I) Permit

FLEXURE RATING

Date:	8/2/2021	Span3-5ft-WB.lbsx	
Time:	3:01 PM	Bentley LEAP Bridge Steel [AASHTO LRFD 8th Ed. with 2017 Interims]	v21.00.00.28

POI Loc. (ft)	Moment Rating Factor	Vehicle Tonnage (Tons)	Rating Tonnage (Tons)	Moment/Stress Resistance (kip-in / ksi)	Controlling Equation	φc	φs	DC1 (kip-in / ksi)	DC2 (kip-in / ksi)	DW (kip-ft / ksi)	flDC1 (ksi)	flDC2 (ksi)	flDW (ksi)	LL (kip-in / ksi)	flLL (ksi)
0.000	473.168	59.995	28387.742	48.881	Equation 6.10.8.1.1-1 lateral torsion buckling	1	1	-0.001	0.000	0.000	-0.007	-0.002	-0.001	-0.013	0.271
0.400	22.083	59.995	1324.892	48.881	Equation 6.10.8.1.1-1 lateral torsion buckling	1	1	-0.010	-0.001	-0.001	-0.097	-0.013	-0.010	-1.981	0.691
0.500	999.990	59.995	59994.402	232634.188	Equation 6.10.7.1.1-1	1	1	0.000	0.000	0.000	0.000	0.000	0.000	0.000	0.000
0.600	14.186	59.995	851.117	48.881	Equation 6.10.8.1.1-1 lateral torsion buckling	1	1	0.163	0.029	0.022	-0.107	-0.015	-0.011	-3.201	0.769
11.500	7.746	59.995	464.704	232634.188	Equation 6.10.7.1.1-1	1	1	30844.139	4581.721	3427.443	-0.017	-0.002	-0.001	20664.050	4.315
21.400	3.712	59.995	222.709	232634.188	Equation 6.10.7.1.1-1	1	1	55687.144	8272.290	6188.243	0.063	0.011	0.008	35491.904	8.860
23.000	3.354	59.995	201.236	232634.188	Equation 6.10.7.1.1-1	1	1	59454.695	8828.940	6604.655	0.084	0.013	0.010	38155.374	9.607
25.900	2.799	59.995	167.922	232634.188	Equation 6.10.7.1.1-1	1	1	66088.772	9800.657	7331.567	0.191	0.014	0.010	42055.621	12.504
26.100	4.015	59.995	240.876	291248.988	Equation 6.10.7.1.1-1	1	1	66534.325	9896.086	7402.955	0.115	0.008	0.006	42339.682	7.131

Date:	8/2/2021	Span3-5ft-WB.lbsx	
Time:	3:01 PM	Bentley LEAP Bridge Steel [AASHTO LRFD 8th Ed. with 2017 Interims]	v21.00.00.28

FLEXURE RATING

POI Loc. (ft)	Moment Rating Factor	Vehicle Tonnage (Tons)	Rating Tonnage (Tons)	Moment/Stress Resistance (kip-in / ksi)	Controlling Equation	φc	φs	DC1 (kip-in / ksi)	DC2 (kip-in / ksi)	DW (kip-ft / ksi)	flDC1 (ksi)	flDC2 (ksi)	flDW (ksi)	LL (kip-in / ksi)	flLL (ksi)
34.500	3.309	59.995	198.533	291248.988	Equation 6.10.7.1.1-1	1	1	84379.933	12527.343	9371.317	0.210	-0.004	-0.003	53133.965	2.147
41.900	2.543	59.995	152.563	291248.988	Equation 6.10.7.1.1-1	1	1	98477.349	14588.882	10913.490	0.320	-0.018	-0.014	61231.039	3.642
42.000	4.273	59.995	256.341	395608.291	Equation 6.10.7.1.1-1	1	1	98660.311	14646.443	10956.549	0.093	-0.005	-0.004	61346.646	1.074
42.100	4.262	59.995	255.688	395608.291	Equation 6.10.7.1.1-1	1	1	98839.931	14672.405	10975.970	0.091	-0.005	-0.004	61422.081	1.092
42.300	4.240	59.995	254.385	395608.291	Equation 6.10.7.1.1-1	1	1	99198.059	14724.141	11014.673	0.091	-0.006	-0.004	61572.952	1.127
46.000	3.824	59.995	229.403	395608.291	Equation 6.10.7.1.1-1	1	1	105625.893	15664.978	11718.484	0.082	-0.007	-0.005	65091.114	1.810
57.500	3.056	59.995	183.340	395608.291	Equation 6.10.7.1.1-1	1	1	123157.299	18222.967	13632.035	0.140	-0.009	-0.007	75664.692	1.550
63.200	2.824	59.995	169.453	395608.291	Equation 6.10.7.1.1-1	1	1	130404.009	19282.999	14425.012	0.132	-0.009	-0.007	79319.846	1.340
69.000	2.617	59.995	156.996	395608.291	Equation 6.10.7.1.1-1	1	1	136794.819	20235.540	15137.580	0.110	-0.010	-0.008	82952.424	1.246
80.500	2.283	59.995	136.950	395608.291	Equation 6.10.7.1.1-1	1	1	146759.786	21692.630	16227.583	0.182	-0.012	-0.009	89411.850	1.520
84.100	2.223	59.995	133.364	395608.291	Equation 6.10.7.1.1-1	1	1	149079.308	22032.129	16481.552	0.179	-0.012	-0.009	90440.946	1.601

Date:	8/2/2021	Span3-5ft-WB.lbsx	
Time:	3:01 PM	Bentley LEAP Bridge Steel [AASHTO LRFD 8th Ed. with 2017 Interims]	v21.00.00.28

FLEXURE RATING

POI Loc. (ft)	Moment Rating Factor	Vehicle Tonnage (Tons)	Rating Tonnage (Tons)	Moment/Stress Resistance (kip-in / ksi)	Controlling Equation	φc	φs	DC1 (kip-in / ksi)	DC2 (kip-in / ksi)	DW (kip-ft / ksi)	flDC1 (ksi)	flDC2 (ksi)	flDW (ksi)	LL (kip-in / ksi)	flLL (ksi)
92.000	2.133	59.995	127.989	395608.291	Equation 6.10.7.1.1-1	1	1	152832.815	22596.954	16904.080	0.136	-0.012	-0.009	91886.886	1.765
103.625	2.052	59.995	123.114	395608.291	Equation 6.10.7.1.1-1	1	1	155261.710	22943.618	17163.407	0.209	-0.014	-0.010	93992.724	1.834
105.000	2.055	59.995	123.279	395608.291	Equation 6.10.7.1.1-1	1	1	155285.216	22947.165	17166.062	0.207	-0.014	-0.010	93879.826	1.817
115.250	2.105	59.995	126.279	395608.291	Equation 6.10.7.1.1-1	1	1	153737.931	22729.843	17003.489	0.128	-0.012	-0.009	93050.208	1.547
125.900	2.202	59.995	132.125	395608.291	Equation 6.10.7.1.1-1	1	1	149078.277	22032.195	16481.602	0.189	-0.013	-0.009	91049.942	1.739
126.750	2.210	59.995	132.606	395608.291	Equation 6.10.7.1.1-1	1	1	148563.819	21957.468	16425.700	0.189	-0.012	-0.009	90992.970	1.741
138.250	2.500	59.995	149.977	395608.291	Equation 6.10.7.1.1-1	1	1	139497.786	20632.280	15434.369	0.106	-0.010	-0.007	85041.738	1.538
146.800	2.796	59.995	167.749	395608.291	Equation 6.10.7.1.1-1	1	1	130400.279	19282.036	14424.292	0.145	-0.009	-0.007	80540.326	1.133
149.750	2.920	59.995	175.207	395608.291	Equation 6.10.7.1.1-1	1	1	126763.536	18749.846	14026.178	0.145	-0.008	-0.006	78896.268	0.966
161.250	3.631	59.995	217.831	395608.291	Equation 6.10.7.1.1-1	1	1	110136.131	16320.403	12208.786	0.079	-0.005	-0.004	68966.964	0.902
167.700	4.144	59.995	248.639	395608.291	Equation 6.10.7.1.1-1	1	1	99188.714	14716.068	11008.633	0.106	-0.006	-0.004	63454.072	0.921

Date:	8/2/2021	Span3-5ft-WB.lbsx	
Time:	3:01 PM	Bentley LEAP Bridge Steel [AASHTO LRFD 8th Ed. with 2017 Interims]	v21.00.00.28

FLEXURE RATING

POI Loc. (ft)	Moment Rating Factor	Vehicle Tonnage (Tons)	Rating Tonnage (Tons)	Moment/Stress Resistance (kip-in / ksi)	Controlling Equation	φc	φs	DC1 (kip-in / ksi)	DC2 (kip-in / ksi)	DW (kip-ft / ksi)	flDC1 (ksi)	flDC2 (ksi)	flDW (ksi)	LL (kip-in / ksi)	flLL (ksi)
167.900	4.158	59.995	249.438	395608.291	Equation 6.10.7.1.1-1	1	1	98830.094	14664.206	10969.838	0.107	-0.006	-0.004	63313.585	0.940
168.000	2.485	59.995	149.058	291248.988	Equation 6.10.7.1.1-1	1	1	98650.375	14638.216	10950.395	0.359	-0.020	-0.015	63243.342	3.155
168.100	2.493	59.995	149.549	291248.988	Equation 6.10.7.1.1-1	1	1	98467.320	14580.071	10906.898	0.358	-0.020	-0.015	63114.503	3.173
172.750	2.819	59.995	169.130	291248.988	Equation 6.10.7.1.1-1	1	1	89780.542	13311.324	9957.788	0.292	-0.017	-0.013	58087.611	4.055
183.900	3.701	59.995	222.056	291248.988	Equation 6.10.7.1.1-1	1	1	66510.515	9886.864	7396.056	0.179	-0.017	-0.012	44302.270	8.987
184.100	2.567	59.995	154.002	232634.188	Equation 6.10.7.1.1-1	1	1	66062.308	9791.817	7324.954	0.300	-0.028	-0.021	44147.819	15.536
184.250	2.819	59.995	169.114	232634.188	Equation 6.10.7.1.1-1	1	1	65725.296	9740.166	7286.317	0.200	-0.019	-0.014	43915.932	10.210
188.600	3.561	59.995	213.658	232634.188	Equation 6.10.7.1.1-1	1	1	55655.891	8252.236	6173.242	0.132	-0.018	-0.013	37876.583	8.304
197.125	6.457	59.995	387.415	232634.188	Equation 6.10.7.1.1-1	1	1	34439.045	5098.940	3814.359	0.022	-0.016	-0.012	24722.579	4.601
209.400	175.972	59.995	10557.434	232634.188	Equation 6.10.7.1.1-1	1	1	387.547	60.976	45.615	-0.138	-0.015	-0.011	327.883	0.899
209.500	999.990	59.995	59994.402	232634.188	Equation 6.10.7.1.1-1	1	1	0.000	0.000	0.000	0.000	0.000	0.000	0.000	0.000

Date:	8/2/2021	Span3-5ft-WB.lbsx	
Time:	3:01 PM	Bentley LEAP Bridge Steel [AASHTO LRFD 8th Ed. with 2017 Interims]	v21.00.00.28

FLEXURE RATING

POI Loc. (ft)	Moment Rating Factor	Vehicle Tonnage (Tons)	Rating Tonnage (Tons)	Moment/Stress Resistance (kip-in / ksi)	Controlling Equation	φc	φs	DC1 (kip-in / ksi)	DC2 (kip-in / ksi)	DW (kip-ft / ksi)	flDC1 (ksi)	flDC2 (ksi)	flDW (ksi)	LL (kip-in / ksi)	flLL (ksi)
209.600	152.417	59.995	9144.278	48.881	Equation 6.10.8.1.1-1 lateral torsion buckling	1	1	-0.009	-0.001	-0.001	-0.108	-0.012	-0.009	-0.076	0.734
210.000	438.307	59.995	26296.253	48.881	Equation 6.10.8.1.1-1 lateral torsion buckling	1	1	-0.001	0.001	0.000	-0.010	-0.001	-0.001	-0.010	0.304

SHEAR RATING

POI Loc. (ft)	Shear Rating Factor	Vehicle Tonnage (Tons)	Rating Tonnage (Tons)	Shear Resistance (kip)	Controlling Equation	φc	φs	DC1 (kip)	DC2 (kip)	DW (kip)	LL (kip)
0.000	27.324	59.995	1639.316	1685.625	Equation 6.10.9.1-1	1.000	1.000	-3.541	-0.145	-0.108	-61.551
0.400	13.620	59.995	817.154	1685.625	Equation 6.10.9.1-1	1.000	1.000	-4.995	-0.287	-0.215	124.161
0.500	6.680	59.995	400.770	1685.625	Equation 6.10.9.1-1	1.000	1.000	246.401	35.913	26.865	206.053
0.600	6.680	59.995	400.782	1685.625	Equation 6.10.9.1-1	1.000	1.000	246.367	35.907	26.861	206.053
11.500	2.560	59.995	153.558	761.178	Equation 6.10.9.1-1	1.000	1.000	220.725	32.155	24.054	189.193

SHEAR RATING

POI Loc. (ft)	Shear Rating Factor	Vehicle Tonnage (Tons)	Rating Tonnage (Tons)	Shear Resistance (kip)	Controlling Equation	φc	φs	DC1 (kip)	DC2 (kip)	DW (kip)	LL (kip)
21.400	3.088	59.995	185.276	761.178	Equation 6.10.9.1-1	1.000	1.000	198.111	28.755	21.510	166.053
23.000	3.086	59.995	185.138	761.178	Equation 6.10.9.1-1	1.000	1.000	195.086	28.203	21.098	167.469
25.900	5.329	59.995	319.703	1124.840	Equation 6.10.9.1-1	1.000	1.000	187.752	27.201	20.349	166.930
26.100	5.346	59.995	320.737	1124.840	Equation 6.10.9.1-1	1.000	1.000	186.965	27.135	20.299	166.560
34.500	3.117	59.995	186.975	678.990	Equation 6.10.9.1-1	1.000	1.000	167.405	24.250	18.140	150.551
41.900	3.560	59.995	213.576	678.990	Equation 6.10.9.1-1	1.000	1.000	150.605	21.709	16.240	137.767
42.000	5.205	59.995	312.248	904.929	Equation 6.10.9.1-1	1.000	1.000	150.399	21.674	16.214	137.695
42.100	5.222	59.995	313.276	904.929	Equation 6.10.9.1-1	1.000	1.000	149.740	21.644	16.191	137.379
42.300	5.250	59.995	314.968	904.929	Equation 6.10.9.1-1	1.000	1.000	149.299	21.575	16.140	136.748
46.000	4.258	59.995	255.476	747.024	Equation 6.10.9.1-1	1.000	1.000	142.166	20.305	15.189	133.707
57.500	4.960	59.995	297.560	747.024	Equation 6.10.9.1-1	1.000	1.000	113.396	16.332	12.218	121.998

SHEAR RATING

POI Loc. (ft)	Shear Rating Factor	Vehicle Tonnage (Tons)	Rating Tonnage (Tons)	Shear Resistance (kip)	Controlling Equation	φc	φs	DC1 (kip)	DC2 (kip)	DW (kip)	LL (kip)
63.200	5.506	59.995	330.327	747.024	Equation 6.10.9.1-1	1.000	1.000	99.397	14.376	10.755	113.060
69.000	5.528	59.995	331.636	747.024	Equation 6.10.9.1-1	1.000	1.000	87.238	12.392	9.270	115.440
80.500	6.375	59.995	382.484	747.024	Equation 6.10.9.1-1	1.000	1.000	58.562	8.424	6.302	105.680
84.100	6.777	59.995	406.586	747.024	Equation 6.10.9.1-1	1.000	1.000	49.671	7.190	5.379	101.045
92.000	7.213	59.995	432.772	742.922	Equation 6.10.9.1-1	1.000	1.000	32.549	4.488	3.357	97.391
103.625	8.480	59.995	508.774	742.922	Equation 6.10.9.1-1	1.000	1.000	3.594	0.477	0.357	87.084
105.000	8.598	59.995	515.828	742.922	Equation 6.10.9.1-1	1.000	1.000	-0.063	-0.022	-0.017	-86.396
115.250	7.371	59.995	442.245	742.922	Equation 6.10.9.1-1	1.000	1.000	-26.251	-3.562	-2.665	-96.379
125.900	7.034	59.995	422.005	747.024	Equation 6.10.9.1-1	1.000	1.000	-49.684	-7.209	-5.393	-97.347
126.750	6.872	59.995	412.297	747.024	Equation 6.10.9.1-1	1.000	1.000	-52.034	-7.498	-5.609	-99.224
138.250	5.805	59.995	348.241	747.024	Equation 6.10.9.1-1	1.000	1.000	-80.934	-11.473	-8.583	-111.299

SHEAR RATING

POI Loc. (ft)	Shear Rating Factor	Vehicle Tonnage (Tons)	Rating Tonnage (Tons)	Shear Resistance (kip)	Controlling Equation	φc	φs	DC1 (kip)	DC2 (kip)	DW (kip)	LL (kip)
146.800	5.609	59.995	336.489	747.024	Equation 6.10.9.1-1	1.000	1.000	-99.379	-14.402	-10.774	-110.984
149.750	5.223	59.995	313.339	747.024	Equation 6.10.9.1-1	1.000	1.000	-106.836	-15.413	-11.530	-117.418
161.250	4.518	59.995	271.034	747.024	Equation 6.10.9.1-1	1.000	1.000	-135.784	-19.391	-14.506	-127.798
167.700	5.068	59.995	304.036	831.150	Equation 6.10.9.1-1	1.000	1.000	-149.395	-21.603	-16.160	-127.078
167.900	5.048	59.995	302.831	831.150	Equation 6.10.9.1-1	1.000	1.000	-149.836	-21.672	-16.212	-127.472
168.000	3.434	59.995	206.028	626.874	Equation 6.10.9.1-1	1.000	1.000	-150.507	-21.703	-16.236	-127.670
168.100	3.431	59.995	205.839	626.874	Equation 6.10.9.1-1	1.000	1.000	-150.712	-21.738	-16.261	-127.710
172.750	3.198	59.995	191.890	626.874	Equation 6.10.9.1-1	1.000	1.000	-161.264	-23.336	-17.457	-132.821
183.900	9.093	59.995	545.539	1557.297	Equation 6.10.9.1-1	1.000	1.000	-186.973	-27.167	-20.323	-145.477
184.100	9.087	59.995	545.153	1557.297	Equation 6.10.9.1-1	1.000	1.000	-187.670	-27.239	-20.376	-145.490
184.250	3.063	59.995	183.784	684.644	Equation 6.10.9.1-1	1.000	1.000	-189.146	-27.307	-20.428	-146.169

SHEAR RATING

POI Loc. (ft)	Shear Rating Factor	Vehicle Tonnage (Tons)	Rating Tonnage (Tons)	Shear Resistance (kip)	Controlling Equation	φc	φs	DC1 (kip)	DC2 (kip)	DW (kip)	LL (kip)
188.600	2.881	59.995	172.818	684.644	Equation 6.10.9.1-1	1.000	1.000	-198.129	-28.802	-21.546	-151.419
197.125	2.450	59.995	146.982	684.644	Equation 6.10.9.1-1	1.000	1.000	-217.436	-31.734	-23.739	-168.062
209.400	7.109	59.995	426.522	1685.625	Equation 6.10.9.1-1	1.000	1.000	-246.191	-35.958	-26.899	-193.631
209.500	7.109	59.995	426.509	1685.625	Equation 6.10.9.1-1	1.000	1.000	-246.224	-35.964	-26.903	-193.631
209.600	14.464	59.995	867.757	1685.625	Equation 6.10.9.1-1	1.000	1.000	4.982	0.293	0.219	-116.921
210.000	40.174	59.995	2410.239	1685.625	Equation 6.10.9.1-1	1.000	1.000	3.529	0.149	0.112	41.864

Design Inventory (Strength I) Design Inventory

FLEXURE RATING

POI Loc. (ft)	Moment Rating Factor	Vehicle Tonnage (Tons)	Rating Tonnage (Tons)	Moment/Stress Resistance (kip-in / ksi)	Controlling Equation	φc	φs	DC1 (kip-in / ksi)	DC2 (kip-in / ksi)	DW (kip-ft / ksi)	flDC1 (ksi)	flDC2 (ksi)	flDW (ksi)	LL (kip-in / ksi)	flLL (ksi)
0.000	373.187	---	---	48.881	Equation 6.10.8.1.1-1 lateral torsion buckling	1	1	-0.001	0.000	0.000	-0.007	-0.002	-0.001	-0.010	0.362

Date:	8/2/2021	Span3-5ft-WB.lbsx	
Time:	3:01 PM	Bentley LEAP Bridge Steel [AASHTO LRFD 8th Ed. with 2017 Interims]	v21.00.00.28

FLEXURE RATING

POI Loc. (ft)	Moment Rating Factor	Vehicle Tonnage (Tons)	Rating Tonnage (Tons)	Moment/Stress Resistance (kip-in / ksi)	Controlling Equation	φc	φs	DC1 (kip-in / ksi)	DC2 (kip-in / ksi)	DW (kip-ft / ksi)	flDC1 (ksi)	flDC2 (ksi)	flDW (ksi)	LL (kip-in / ksi)	flLL (ksi)
0.400	18.323	---	---	48.881	Equation 6.10.8.1.1-1 lateral torsion buckling	1	1	-0.010	-0.001	-0.001	-0.097	-0.013	-0.010	-2.380	0.854
0.500	999.990	---	---	232634.188	Equation 6.10.7.1.1-1	1	1	0.000	0.000	0.000	0.000	0.000	0.000	0.000	0.000
0.600	11.774	---	---	48.881	Equation 6.10.8.1.1-1 lateral torsion buckling	1	1	0.163	0.029	0.022	-0.107	-0.015	-0.011	-3.854	0.935
11.500	6.437	---	---	232634.188	Equation 6.10.7.1.1-1	1	1	30844.139	4581.721	3427.443	-0.017	-0.002	-0.001	24264.122	5.790
21.400	3.051	---	---	232634.188	Equation 6.10.7.1.1-1	1	1	55687.144	8272.290	6188.243	0.063	0.011	0.008	42175.342	11.867
23.000	2.760	---	---	232634.188	Equation 6.10.7.1.1-1	1	1	59454.695	8828.940	6604.655	0.084	0.013	0.010	45257.940	12.872
25.900	2.285	---	---	232634.188	Equation 6.10.7.1.1-1	1	1	66088.772	9800.657	7331.567	0.193	0.014	0.010	50148.406	16.842
26.100	3.291	---	---	291248.988	Equation 6.10.7.1.1-1	1	1	66534.325	9896.086	7402.955	0.116	0.008	0.006	50495.314	9.584
34.500	2.746	---	---	291248.988	Equation 6.10.7.1.1-1	1	1	84379.933	12527.343	9371.317	0.211	-0.004	-0.003	63654.360	2.886
41.900	2.105	---	---	291248.988	Equation 6.10.7.1.1-1	1	1	98477.349	14588.882	10913.490	0.322	-0.019	-0.014	73807.716	4.531

Date:	8/2/2021	Span3-5ft-WB.lbsx	
Time:	3:01 PM	Bentley LEAP Bridge Steel [AASHTO LRFD 8th Ed. with 2017 Interims]	v21.00.00.28

FLEXURE RATING

POI Loc. (ft)	Moment Rating Factor	Vehicle Tonnage (Tons)	Rating Tonnage (Tons)	Moment/Stress Resistance (kip-in / ksi)	Controlling Equation	φc	φs	DC1 (kip-in / ksi)	DC2 (kip-in / ksi)	DW (kip-ft / ksi)	flDC1 (ksi)	flDC2 (ksi)	flDW (ksi)	LL (kip-in / ksi)	flLL (ksi)
42.000	3.541	---	---	395608.291	Equation 6.10.7.1.1-1	1	1	98660.311	14646.443	10956.549	0.093	-0.005	-0.004	73952.760	1.337
42.100	3.531	---	---	395608.291	Equation 6.10.7.1.1-1	1	1	98839.931	14672.405	10975.970	0.092	-0.005	-0.004	74057.981	1.362
42.300	3.511	---	---	395608.291	Equation 6.10.7.1.1-1	1	1	99198.059	14724.141	11014.673	0.091	-0.006	-0.004	74268.422	1.411
46.000	3.149	---	---	395608.291	Equation 6.10.7.1.1-1	1	1	105625.893	15664.978	11718.484	0.083	-0.007	-0.005	78725.640	2.360
57.500	2.524	---	---	395608.291	Equation 6.10.7.1.1-1	1	1	123157.299	18222.967	13632.035	0.141	-0.009	-0.007	91456.260	1.963
63.200	2.325	---	---	395608.291	Equation 6.10.7.1.1-1	1	1	130404.009	19282.999	14425.012	0.133	-0.009	-0.007	96302.770	1.650
69.000	2.153	---	---	395608.291	Equation 6.10.7.1.1-1	1	1	136794.819	20235.540	15137.580	0.111	-0.010	-0.008	100910.460	1.468
80.500	1.885	---	---	395608.291	Equation 6.10.7.1.1-1	1	1	146759.786	21692.630	16227.583	0.184	-0.012	-0.009	108262.350	1.859
84.100	1.832	---	---	395608.291	Equation 6.10.7.1.1-1	1	1	149079.308	22032.129	16481.552	0.181	-0.012	-0.009	109757.134	1.948
92.000	1.748	---	---	395608.291	Equation 6.10.7.1.1-1	1	1	152832.815	22596.954	16904.080	0.137	-0.012	-0.009	112174.440	2.126
103.625	1.689	---	---	395608.291	Equation 6.10.7.1.1-1	1	1	155261.710	22943.618	17163.407	0.211	-0.014	-0.010	114156.630	2.263

Date:	8/2/2021	Span3-5ft-WB.lbsx	
Time:	3:01 PM	Bentley LEAP Bridge Steel [AASHTO LRFD 8th Ed. with 2017 Interims]	v21.00.00.28

FLEXURE RATING

POI Loc. (ft)	Moment Rating Factor	Vehicle Tonnage (Tons)	Rating Tonnage (Tons)	Moment/Stress Resistance (kip-in / ksi)	Controlling Equation	φc	φs	DC1 (kip-in / ksi)	DC2 (kip-in / ksi)	DW (kip-ft / ksi)	flDC1 (ksi)	flDC2 (ksi)	flDW (ksi)	LL (kip-in / ksi)	flLL (ksi)
105.000	1.690	---	---	395608.291	Equation 6.10.7.1.1-1	1	1	155285.216	22947.165	17166.062	0.210	-0.014	-0.010	114077.494	2.246
115.250	1.729	---	---	395608.291	Equation 6.10.7.1.1-1	1	1	153737.931	22729.843	17003.489	0.130	-0.012	-0.009	113266.020	1.882
125.900	1.819	---	---	395608.291	Equation 6.10.7.1.1-1	1	1	149078.277	22032.195	16481.602	0.191	-0.013	-0.009	110103.667	2.174
126.750	1.828	---	---	395608.291	Equation 6.10.7.1.1-1	1	1	148563.819	21957.468	16425.700	0.191	-0.013	-0.009	109895.520	2.181
138.250	2.062	---	---	395608.291	Equation 6.10.7.1.1-1	1	1	139497.786	20632.280	15434.369	0.107	-0.010	-0.007	103064.010	1.888
146.800	2.330	---	---	395608.291	Equation 6.10.7.1.1-1	1	1	130400.279	19282.036	14424.292	0.146	-0.009	-0.007	96749.809	1.317
149.750	2.444	---	---	395608.291	Equation 6.10.7.1.1-1	1	1	126763.536	18749.846	14026.178	0.146	-0.008	-0.006	94405.710	1.088
161.250	3.039	---	---	395608.291	Equation 6.10.7.1.1-1	1	1	110136.131	16320.403	12208.786	0.080	-0.005	-0.004	82516.560	1.018
167.700	3.497	---	---	395608.291	Equation 6.10.7.1.1-1	1	1	99188.714	14716.068	11008.633	0.107	-0.006	-0.004	75109.855	1.137
167.900	3.509	---	---	395608.291	Equation 6.10.7.1.1-1	1	1	98830.094	14664.206	10969.838	0.107	-0.006	-0.004	74894.118	1.172
168.000	2.094	---	---	291248.988	Equation 6.10.7.1.1-1	1	1	98650.375	14638.216	10950.395	0.361	-0.020	-0.015	74786.250	3.956

Date:	8/2/2021	Span3-5ft-WB.lbsx	
Time:	3:01 PM	Bentley LEAP Bridge Steel [AASHTO LRFD 8th Ed. with 2017 Interims]	v21.00.00.28

FLEXURE RATING

POI Loc. (ft)	Moment Rating Factor	Vehicle Tonnage (Tons)	Rating Tonnage (Tons)	Moment/Stress Resistance (kip-in / ksi)	Controlling Equation	φc	φs	DC1 (kip-in / ksi)	DC2 (kip-in / ksi)	DW (kip-ft / ksi)	flDC1 (ksi)	flDC2 (ksi)	flDW (ksi)	LL (kip-in / ksi)	flLL (ksi)
168.100	2.100	---	---	291248.988	Equation 6.10.7.1.1-1	1	1	98467.320	14580.071	10906.898	0.360	-0.020	-0.015	74637.224	3.995
172.750	2.355	---	---	291248.988	Equation 6.10.7.1.1-1	1	1	89780.542	13311.324	9957.788	0.293	-0.018	-0.013	68514.469	5.681
183.900	3.056	---	---	291248.988	Equation 6.10.7.1.1-1	1	1	66510.515	9886.864	7396.056	0.180	-0.017	-0.013	51857.652	12.273
184.100	2.110	---	---	232634.188	Equation 6.10.7.1.1-1	1	1	66062.308	9791.817	7324.954	0.302	-0.029	-0.021	51615.942	21.232
184.250	2.345	---	---	232634.188	Equation 6.10.7.1.1-1	1	1	65725.296	9740.166	7286.317	0.200	-0.019	-0.014	51347.730	13.881
188.600	2.973	---	---	232634.188	Equation 6.10.7.1.1-1	1	1	55655.891	8252.236	6173.242	0.133	-0.018	-0.013	44110.641	11.290
197.125	5.438	---	---	232634.188	Equation 6.10.7.1.1-1	1	1	34439.045	5098.940	3814.359	0.022	-0.016	-0.012	28554.625	6.268
209.400	139.003	---	---	232634.188	Equation 6.10.7.1.1-1	1	1	387.547	60.976	45.615	-0.138	-0.015	-0.011	370.096	1.179
209.500	999.990	---	---	232634.188	Equation 6.10.7.1.1-1	1	1	0.000	0.000	0.000	0.000	0.000	0.000	0.000	0.000
209.600	127.965	---	---	48.881	Equation 6.10.8.1.1-1 lateral torsion buckling	1	1	-0.009	-0.001	-0.001	-0.109	-0.012	-0.009	-0.060	0.964

Date:	8/2/2021	Span3-5ft-WB.lbsx	
Time:	3:01 PM	Bentley LEAP Bridge Steel [AASHTO LRFD 8th Ed. with 2017 Interims]	v21.00.00.28

FLEXURE RATING

POI Loc. (ft)	Moment Rating Factor	Vehicle Tonnage (Tons)	Rating Tonnage (Tons)	Moment/Stress Resistance (kip-in / ksi)	Controlling Equation	φc	φs	DC1 (kip-in / ksi)	DC2 (kip-in / ksi)	DW (kip-ft / ksi)	flDC1 (ksi)	flDC2 (ksi)	flDW (ksi)	LL (kip-in / ksi)	flLL (ksi)
210.000	338.976	---	---	48.881	Equation 6.10.8.1.1-1 lateral torsion buckling	1	1	-0.001	0.001	0.000	-0.010	-0.001	-0.001	-0.009	0.405

SHEAR RATING

POI Loc. (ft)	Shear Rating Factor	Vehicle Tonnage (Tons)	Rating Tonnage (Tons)	Shear Resistance (kip)	Controlling Equation	φc	φs	DC1 (kip)	DC2 (kip)	DW (kip)	LL (kip)
0.000	34.806	---	---	1685.625	Equation 6.10.9.1-1	1.000	1.000	-3.541	-0.145	-0.108	-48.320
0.400	11.872	---	---	1685.625	Equation 6.10.9.1-1	1.000	1.000	-4.995	-0.287	-0.215	142.452
0.500	5.821	---	---	1685.625	Equation 6.10.9.1-1	1.000	1.000	246.401	35.913	26.865	236.450
0.600	5.821	---	---	1685.625	Equation 6.10.9.1-1	1.000	1.000	246.367	35.907	26.861	236.450
11.500	2.251	---	---	761.178	Equation 6.10.9.1-1	1.000	1.000	220.725	32.155	24.054	215.168
21.400	2.747	---	---	761.178	Equation 6.10.9.1-1	1.000	1.000	198.111	28.755	21.510	186.668
23.000	2.762	---	---	761.178	Equation 6.10.9.1-1	1.000	1.000	195.086	28.203	21.098	187.100

SHEAR RATING

POI Loc. (ft)	Shear Rating Factor	Vehicle Tonnage (Tons)	Rating Tonnage (Tons)	Shear Resistance (kip)	Controlling Equation	φc	φs	DC1 (kip)	DC2 (kip)	DW (kip)	LL (kip)
25.900	4.759	---	---	1124.840	Equation 6.10.9.1-1	1.000	1.000	187.752	27.201	20.349	186.931
26.100	4.775	---	---	1124.840	Equation 6.10.9.1-1	1.000	1.000	186.965	27.135	20.299	186.489
34.500	2.816	---	---	678.990	Equation 6.10.9.1-1	1.000	1.000	167.405	24.250	18.140	166.636
41.900	3.218	---	---	678.990	Equation 6.10.9.1-1	1.000	1.000	150.605	21.709	16.240	152.414
42.000	4.703	---	---	904.929	Equation 6.10.9.1-1	1.000	1.000	150.399	21.674	16.214	152.369
42.100	4.719	---	---	904.929	Equation 6.10.9.1-1	1.000	1.000	149.740	21.644	16.191	151.999
42.300	4.746	---	---	904.929	Equation 6.10.9.1-1	1.000	1.000	149.299	21.575	16.140	151.260
46.000	3.887	---	---	747.024	Equation 6.10.9.1-1	1.000	1.000	142.166	20.305	15.189	146.470
57.500	4.554	---	---	747.024	Equation 6.10.9.1-1	1.000	1.000	113.396	16.332	12.218	132.872
63.200	5.121	---	---	747.024	Equation 6.10.9.1-1	1.000	1.000	99.397	14.376	10.755	121.549
69.000	5.190	---	---	747.024	Equation 6.10.9.1-1	1.000	1.000	87.238	12.392	9.270	122.948

SHEAR RATING

POI Loc. (ft)	Shear Rating Factor	Vehicle Tonnage (Tons)	Rating Tonnage (Tons)	Shear Resistance (kip)	Controlling Equation	φc	φs	DC1 (kip)	DC2 (kip)	DW (kip)	LL (kip)
80.500	6.032	---	---	747.024	Equation 6.10.9.1-1	1.000	1.000	58.562	8.424	6.302	111.689
84.100	6.449	---	---	747.024	Equation 6.10.9.1-1	1.000	1.000	49.671	7.190	5.379	106.182
92.000	6.912	---	---	742.922	Equation 6.10.9.1-1	1.000	1.000	32.549	4.488	3.357	101.643
103.625	8.173	---	---	742.922	Equation 6.10.9.1-1	1.000	1.000	3.594	0.477	0.357	90.362
105.000	8.425	---	---	742.922	Equation 6.10.9.1-1	1.000	1.000	-0.063	-0.022	-0.017	-88.169
115.250	7.154	---	---	742.922	Equation 6.10.9.1-1	1.000	1.000	-26.251	-3.562	-2.665	-99.310
125.900	6.674	---	---	747.024	Equation 6.10.9.1-1	1.000	1.000	-49.684	-7.209	-5.393	-102.594
126.750	6.497	---	---	747.024	Equation 6.10.9.1-1	1.000	1.000	-52.034	-7.498	-5.609	-104.958
138.250	5.480	---	---	747.024	Equation 6.10.9.1-1	1.000	1.000	-80.934	-11.473	-8.583	-117.890
146.800	5.203	---	---	747.024	Equation 6.10.9.1-1	1.000	1.000	-99.379	-14.402	-10.774	-119.632
149.750	4.838	---	---	747.024	Equation 6.10.9.1-1	1.000	1.000	-106.836	-15.413	-11.530	-126.753

SHEAR RATING

POI Loc. (ft)	Shear Rating Factor	Vehicle Tonnage (Tons)	Rating Tonnage (Tons)	Shear Resistance (kip)	Controlling Equation	φc	φs	DC1 (kip)	DC2 (kip)	DW (kip)	LL (kip)
161.250	4.161	---	---	747.024	Equation 6.10.9.1-1	1.000	1.000	-135.784	-19.391	-14.506	-138.760
167.700	4.605	---	---	831.150	Equation 6.10.9.1-1	1.000	1.000	-149.395	-21.603	-16.160	-139.843
167.900	4.583	---	---	831.150	Equation 6.10.9.1-1	1.000	1.000	-149.836	-21.672	-16.212	-140.410
168.000	3.116	---	---	626.874	Equation 6.10.9.1-1	1.000	1.000	-150.507	-21.703	-16.236	-140.694
168.100	3.114	---	---	626.874	Equation 6.10.9.1-1	1.000	1.000	-150.712	-21.738	-16.261	-140.712
172.750	2.891	---	---	626.874	Equation 6.10.9.1-1	1.000	1.000	-161.264	-23.336	-17.457	-146.940
183.900	8.099	---	---	1557.297	Equation 6.10.9.1-1	1.000	1.000	-186.973	-27.167	-20.323	-163.331
184.100	8.089	---	---	1557.297	Equation 6.10.9.1-1	1.000	1.000	-187.670	-27.239	-20.376	-163.428
184.250	2.723	---	---	684.644	Equation 6.10.9.1-1	1.000	1.000	-189.146	-27.307	-20.428	-164.465
188.600	2.553	---	---	684.644	Equation 6.10.9.1-1	1.000	1.000	-198.129	-28.802	-21.546	-170.845
197.125	2.177	---	---	684.644	Equation 6.10.9.1-1	1.000	1.000	-217.436	-31.734	-23.739	-189.162

Date:	8/2/2021	Span3-5ft-WB.lbsx	
Time:	3:01 PM	Bentley LEAP Bridge Steel [AASHTO LRFD 8th Ed. with 2017 Interims]	v21.00.00.28

SHEAR RATING

POI Loc. (ft)	Shear Rating Factor	Vehicle Tonnage (Tons)	Rating Tonnage (Tons)	Shear Resistance (kip)	Controlling Equation	φc	φs	DC1 (kip)	DC2 (kip)	DW (kip)	LL (kip)
209.400	6.278	---	---	1685.625	Equation 6.10.9.1-1	1.000	1.000	-246.191	-35.958	-26.899	-219.263
209.500	6.278	---	---	1685.625	Equation 6.10.9.1-1	1.000	1.000	-246.224	-35.964	-26.903	-219.263
209.600	12.757	---	---	1685.625	Equation 6.10.9.1-1	1.000	1.000	4.982	0.293	0.219	-132.559
210.000	50.153	---	---	1685.625	Equation 6.10.9.1-1	1.000	1.000	3.529	0.149	0.112	33.534

Design Operating (Strength I) **Design Operating**

FLEXURE RATING

POI Loc. (ft)	Moment Rating Factor	Vehicle Tonnage (Tons)	Rating Tonnage (Tons)	Moment/Stress Resistance (kip-in / ksi)	Controlling Equation	φc	φs	DC1 (kip-in / ksi)	DC2 (kip-in / ksi)	DW (kip-ft / ksi)	flDC1 (ksi)	flDC2 (ksi)	flDW (ksi)	LL (kip-in / ksi)	flLL (ksi)
0.000	485.391	---	---	48.881	Equation 6.10.8.1.1-1 lateral torsion buckling	1	1	-0.001	0.000	0.000	-0.007	-0.002	-0.001	-0.008	0.278
0.400	23.762	---	---	48.881	Equation 6.10.8.1.1-1 lateral torsion buckling	1	1	-0.010	-0.001	-0.001	-0.097	-0.013	-0.010	-1.836	0.656

Date:	8/2/2021	Span3-5ft-WB.lbsx	
Time:	3:01 PM	Bentley LEAP Bridge Steel [AASHTO LRFD 8th Ed. with 2017 Interims]	v21.00.00.28

FLEXURE RATING

POI Loc. (ft)	Moment Rating Factor	Vehicle Tonnage (Tons)	Rating Tonnage (Tons)	Moment/Stress Resistance (kip-in / ksi)	Controlling Equation	φc	φs	DC1 (kip-in / ksi)	DC2 (kip-in / ksi)	DW (kip-ft / ksi)	flDC1 (ksi)	flDC2 (ksi)	flDW (ksi)	LL (kip-in / ksi)	flLL (ksi)
0.500	999.990	---	---	232634.188	Equation 6.10.7.1.1-1	1	1	0.000	0.000	0.000	0.000	0.000	0.000	0.000	0.000
0.600	15.267	---	---	48.881	Equation 6.10.8.1.1-1 lateral torsion buckling	1	1	0.163	0.029	0.022	-0.106	-0.015	-0.011	-2.973	0.718
11.500	8.347	---	---	232634.188	Equation 6.10.7.1.1-1	1	1	30844.139	4581.721	3427.443	-0.017	-0.002	-0.001	18718.037	4.457
21.400	3.956	---	---	232634.188	Equation 6.10.7.1.1-1	1	1	55687.144	8272.290	6188.243	0.063	0.011	0.008	32535.264	9.135
23.000	3.580	---	---	232634.188	Equation 6.10.7.1.1-1	1	1	59454.695	8828.940	6604.655	0.084	0.013	0.010	34913.268	9.909
25.900	2.968	---	---	232634.188	Equation 6.10.7.1.1-1	1	1	66088.772	9800.657	7331.567	0.191	0.014	0.010	38685.913	12.876
26.100	4.271	---	---	291248.988	Equation 6.10.7.1.1-1	1	1	66534.325	9896.086	7402.955	0.115	0.008	0.006	38953.528	7.359
34.500	3.561	---	---	291248.988	Equation 6.10.7.1.1-1	1	1	84379.933	12527.343	9371.317	0.210	-0.004	-0.003	49104.792	2.216
41.900	2.730	---	---	291248.988	Equation 6.10.7.1.1-1	1	1	98477.349	14588.882	10913.490	0.320	-0.018	-0.014	56937.381	3.476
42.000	4.590	---	---	395608.291	Equation 6.10.7.1.1-1	1	1	98660.311	14646.443	10956.549	0.093	-0.005	-0.004	57049.272	1.026

Date:	8/2/2021	Span3-5ft-WB.lbsx	
Time:	3:01 PM	Bentley LEAP Bridge Steel [AASHTO LRFD 8th Ed. with 2017 Interims]	v21.00.00.28

FLEXURE RATING

POI Loc. (ft)	Moment Rating Factor	Vehicle Tonnage (Tons)	Rating Tonnage (Tons)	Moment/Stress Resistance (kip-in / ksi)	Controlling Equation	φc	φs	DC1 (kip-in / ksi)	DC2 (kip-in / ksi)	DW (kip-ft / ksi)	flDC1 (ksi)	flDC2 (ksi)	flDW (ksi)	LL (kip-in / ksi)	flLL (ksi)
42.100	4.577	---	---	395608.291	Equation 6.10.7.1.1-1	1	1	98839.931	14672.405	10975.970	0.091	-0.005	-0.004	57130.442	1.045
42.300	4.552	---	---	395608.291	Equation 6.10.7.1.1-1	1	1	99198.059	14724.141	11014.673	0.091	-0.006	-0.004	57292.782	1.083
46.000	4.084	---	---	395608.291	Equation 6.10.7.1.1-1	1	1	105625.893	15664.978	11718.484	0.082	-0.007	-0.005	60731.208	1.803
57.500	3.273	---	---	395608.291	Equation 6.10.7.1.1-1	1	1	123157.299	18222.967	13632.035	0.139	-0.009	-0.007	70551.972	1.500
63.200	3.015	---	---	395608.291	Equation 6.10.7.1.1-1	1	1	130404.009	19282.999	14425.012	0.132	-0.009	-0.007	74290.708	1.260
69.000	2.792	---	---	395608.291	Equation 6.10.7.1.1-1	1	1	136794.819	20235.540	15137.580	0.110	-0.010	-0.008	77845.212	1.118
80.500	2.444	---	---	395608.291	Equation 6.10.7.1.1-1	1	1	146759.786	21692.630	16227.583	0.181	-0.012	-0.009	83516.670	1.415
84.100	2.375	---	---	395608.291	Equation 6.10.7.1.1-1	1	1	149079.308	22032.129	16481.552	0.179	-0.012	-0.009	84669.789	1.483
92.000	2.267	---	---	395608.291	Equation 6.10.7.1.1-1	1	1	152832.815	22596.954	16904.080	0.135	-0.012	-0.009	86534.568	1.616
103.625	2.190	---	---	395608.291	Equation 6.10.7.1.1-1	1	1	155261.710	22943.618	17163.407	0.208	-0.014	-0.010	88063.686	1.720
105.000	2.192	---	---	395608.291	Equation 6.10.7.1.1-1	1	1	155285.216	22947.165	17166.062	0.207	-0.013	-0.010	88002.638	1.707

Date:	8/2/2021	Span3-5ft-WB.lbsx	
Time:	3:01 PM	Bentley LEAP Bridge Steel [AASHTO LRFD 8th Ed. with 2017 Interims]	v21.00.00.28

FLEXURE RATING

POI Loc. (ft)	Moment Rating Factor	Vehicle Tonnage (Tons)	Rating Tonnage (Tons)	Moment/Stress Resistance (kip-in / ksi)	Controlling Equation	φc	φs	DC1 (kip-in / ksi)	DC2 (kip-in / ksi)	DW (kip-ft / ksi)	flDC1 (ksi)	flDC2 (ksi)	flDW (ksi)	LL (kip-in / ksi)	flLL (ksi)
115.250	2.242	---	---	395608.291	Equation 6.10.7.1.1-1	1	1	153737.931	22729.843	17003.489	0.128	-0.012	-0.009	87376.644	1.433
125.900	2.359	---	---	395608.291	Equation 6.10.7.1.1-1	1	1	149078.277	22032.195	16481.602	0.188	-0.012	-0.009	84937.114	1.654
126.750	2.370	---	---	395608.291	Equation 6.10.7.1.1-1	1	1	148563.819	21957.468	16425.700	0.189	-0.012	-0.009	84776.544	1.660
138.250	2.674	---	---	395608.291	Equation 6.10.7.1.1-1	1	1	139497.786	20632.280	15434.369	0.106	-0.010	-0.007	79506.522	1.442
146.800	3.021	---	---	395608.291	Equation 6.10.7.1.1-1	1	1	130400.279	19282.036	14424.292	0.144	-0.009	-0.007	74635.567	1.005
149.750	3.169	---	---	395608.291	Equation 6.10.7.1.1-1	1	1	126763.536	18749.846	14026.178	0.144	-0.008	-0.006	72827.262	0.831
161.250	3.940	---	---	395608.291	Equation 6.10.7.1.1-1	1	1	110136.131	16320.403	12208.786	0.079	-0.005	-0.004	63655.632	0.781
167.700	4.534	---	---	395608.291	Equation 6.10.7.1.1-1	1	1	99188.714	14716.068	11008.633	0.106	-0.006	-0.004	57941.888	0.873
167.900	4.550	---	---	395608.291	Equation 6.10.7.1.1-1	1	1	98830.094	14664.206	10969.838	0.106	-0.006	-0.004	57775.463	0.899
168.000	2.715	---	---	291248.988	Equation 6.10.7.1.1-1	1	1	98650.375	14638.216	10950.395	0.359	-0.020	-0.015	57692.250	3.033
168.100	2.723	---	---	291248.988	Equation 6.10.7.1.1-1	1	1	98467.320	14580.071	10906.898	0.357	-0.020	-0.015	57577.287	3.063

Date:	8/2/2021	Span3-5ft-WB.lbsx	
Time:	3:01 PM	Bentley LEAP Bridge Steel [AASHTO LRFD 8th Ed. with 2017 Interims]	v21.00.00.28

FLEXURE RATING

POI Loc. (ft)	Moment Rating Factor	Vehicle Tonnage (Tons)	Rating Tonnage (Tons)	Moment/Stress Resistance (kip-in / ksi)	Controlling Equation	φc	φs	DC1 (kip-in / ksi)	DC2 (kip-in / ksi)	DW (kip-ft / ksi)	flDC1 (ksi)	flDC2 (ksi)	flDW (ksi)	LL (kip-in / ksi)	flLL (ksi)
172.750	3.054	---	---	291248.988	Equation 6.10.7.1.1-1	1	1	89780.542	13311.324	9957.788	0.292	-0.017	-0.013	52854.019	4.357
183.900	3.967	---	---	291248.988	Equation 6.10.7.1.1-1	1	1	66510.515	9886.864	7396.056	0.179	-0.017	-0.012	40004.474	9.408
184.100	2.743	---	---	232634.188	Equation 6.10.7.1.1-1	1	1	66062.308	9791.817	7324.954	0.299	-0.028	-0.021	39818.012	16.210
184.250	3.042	---	---	232634.188	Equation 6.10.7.1.1-1	1	1	65725.296	9740.166	7286.317	0.200	-0.019	-0.014	39611.106	10.669
188.600	3.857	---	---	232634.188	Equation 6.10.7.1.1-1	1	1	55655.891	8252.236	6173.242	0.132	-0.018	-0.013	34028.208	8.677
197.125	7.054	---	---	232634.188	Equation 6.10.7.1.1-1	1	1	34439.045	5098.940	3814.359	0.022	-0.016	-0.012	22027.854	4.818
209.400	180.608	---	---	232634.188	Equation 6.10.7.1.1-1	1	1	387.547	60.976	45.615	-0.138	-0.015	-0.011	285.503	0.906
209.500	999.990	---	---	232634.188	Equation 6.10.7.1.1-1	1	1	0.000	0.000	0.000	0.000	0.000	0.000	0.000	0.000
209.600	166.673	---	---	48.881	Equation 6.10.8.1.1-1 lateral torsion buckling	1	1	-0.009	-0.001	-0.001	-0.108	-0.012	-0.009	-0.046	0.739
210.000	441.745	---	---	48.881	Equation 6.10.8.1.1-1 lateral torsion buckling	1	1	-0.001	0.001	0.000	-0.010	-0.001	-0.001	-0.007	0.311

SHEAR RATING

POI Loc. (ft)	Shear Rating Factor	Vehicle Tonnage (Tons)	Rating Tonnage (Tons)	Shear Resistance (kip)	Controlling Equation	φc	φs	DC1 (kip)	DC2 (kip)	DW (kip)	LL (kip)
0.000	45.119	---	---	1685.625	Equation 6.10.9.1-1	1.000	1.000	-3.541	-0.145	-0.108	-37.276
0.400	15.389	---	---	1685.625	Equation 6.10.9.1-1	1.000	1.000	-4.995	-0.287	-0.215	109.891
0.500	7.546	---	---	1685.625	Equation 6.10.9.1-1	1.000	1.000	246.401	35.913	26.865	182.404
0.600	7.546	---	---	1685.625	Equation 6.10.9.1-1	1.000	1.000	246.367	35.907	26.861	182.404
11.500	2.917	---	---	761.178	Equation 6.10.9.1-1	1.000	1.000	220.725	32.155	24.054	165.987
21.400	3.561	---	---	761.178	Equation 6.10.9.1-1	1.000	1.000	198.111	28.755	21.510	144.001
23.000	3.581	---	---	761.178	Equation 6.10.9.1-1	1.000	1.000	195.086	28.203	21.098	144.334
25.900	6.169	---	---	1124.840	Equation 6.10.9.1-1	1.000	1.000	187.752	27.201	20.349	144.204
26.100	6.190	---	---	1124.840	Equation 6.10.9.1-1	1.000	1.000	186.965	27.135	20.299	143.863
34.500	3.650	---	---	678.990	Equation 6.10.9.1-1	1.000	1.000	167.405	24.250	18.140	128.548
41.900	4.171	---	---	678.990	Equation 6.10.9.1-1	1.000	1.000	150.605	21.709	16.240	117.576

SHEAR RATING

POI Loc. (ft)	Shear Rating Factor	Vehicle Tonnage (Tons)	Rating Tonnage (Tons)	Shear Resistance (kip)	Controlling Equation	φc	φs	DC1 (kip)	DC2 (kip)	DW (kip)	LL (kip)
42.000	6.097	---	---	904.929	Equation 6.10.9.1-1	1.000	1.000	150.399	21.674	16.214	117.542
42.100	6.118	---	---	904.929	Equation 6.10.9.1-1	1.000	1.000	149.740	21.644	16.191	117.257
42.300	6.153	---	---	904.929	Equation 6.10.9.1-1	1.000	1.000	149.299	21.575	16.140	116.686
46.000	5.039	---	---	747.024	Equation 6.10.9.1-1	1.000	1.000	142.166	20.305	15.189	112.991
57.500	5.903	---	---	747.024	Equation 6.10.9.1-1	1.000	1.000	113.396	16.332	12.218	102.501
63.200	6.639	---	---	747.024	Equation 6.10.9.1-1	1.000	1.000	99.397	14.376	10.755	93.766
69.000	6.728	---	---	747.024	Equation 6.10.9.1-1	1.000	1.000	87.238	12.392	9.270	94.845
80.500	7.820	---	---	747.024	Equation 6.10.9.1-1	1.000	1.000	58.562	8.424	6.302	86.160
84.100	8.360	---	---	747.024	Equation 6.10.9.1-1	1.000	1.000	49.671	7.190	5.379	81.912
92.000	8.960	---	---	742.922	Equation 6.10.9.1-1	1.000	1.000	32.549	4.488	3.357	78.410
103.625	10.594	---	---	742.922	Equation 6.10.9.1-1	1.000	1.000	3.594	0.477	0.357	69.708

SHEAR RATING

POI Loc. (ft)	Shear Rating Factor	Vehicle Tonnage (Tons)	Rating Tonnage (Tons)	Shear Resistance (kip)	Controlling Equation	φc	φs	DC1 (kip)	DC2 (kip)	DW (kip)	LL (kip)
105.000	10.921	---	---	742.922	Equation 6.10.9.1-1	1.000	1.000	-0.063	-0.022	-0.017	-68.016
115.250	9.273	---	---	742.922	Equation 6.10.9.1-1	1.000	1.000	-26.251	-3.562	-2.665	-76.611
125.900	8.652	---	---	747.024	Equation 6.10.9.1-1	1.000	1.000	-49.684	-7.209	-5.393	-79.144
126.750	8.422	---	---	747.024	Equation 6.10.9.1-1	1.000	1.000	-52.034	-7.498	-5.609	-80.968
138.250	7.104	---	---	747.024	Equation 6.10.9.1-1	1.000	1.000	-80.934	-11.473	-8.583	-90.943
146.800	6.745	---	---	747.024	Equation 6.10.9.1-1	1.000	1.000	-99.379	-14.402	-10.774	-92.288
149.750	6.272	---	---	747.024	Equation 6.10.9.1-1	1.000	1.000	-106.836	-15.413	-11.530	-97.781
161.250	5.394	---	---	747.024	Equation 6.10.9.1-1	1.000	1.000	-135.784	-19.391	-14.506	-107.044
167.700	5.970	---	---	831.150	Equation 6.10.9.1-1	1.000	1.000	-149.395	-21.603	-16.160	-107.879
167.900	5.940	---	---	831.150	Equation 6.10.9.1-1	1.000	1.000	-149.836	-21.672	-16.212	-108.316
168.000	4.040	---	---	626.874	Equation 6.10.9.1-1	1.000	1.000	-150.507	-21.703	-16.236	-108.535

SHEAR RATING

POI Loc. (ft)	Shear Rating Factor	Vehicle Tonnage (Tons)	Rating Tonnage (Tons)	Shear Resistance (kip)	Controlling Equation	φc	φs	DC1 (kip)	DC2 (kip)	DW (kip)	LL (kip)
168.100	4.037	---	---	626.874	Equation 6.10.9.1-1	1.000	1.000	-150.712	-21.738	-16.261	-108.549
172.750	3.748	---	---	626.874	Equation 6.10.9.1-1	1.000	1.000	-161.264	-23.336	-17.457	-113.354
183.900	10.499	---	---	1557.297	Equation 6.10.9.1-1	1.000	1.000	-186.973	-27.167	-20.323	-125.998
184.100	10.486	---	---	1557.297	Equation 6.10.9.1-1	1.000	1.000	-187.670	-27.239	-20.376	-126.073
184.250	3.529	---	---	684.644	Equation 6.10.9.1-1	1.000	1.000	-189.146	-27.307	-20.428	-126.873
188.600	3.309	---	---	684.644	Equation 6.10.9.1-1	1.000	1.000	-198.129	-28.802	-21.546	-131.795
197.125	2.822	---	---	684.644	Equation 6.10.9.1-1	1.000	1.000	-217.436	-31.734	-23.739	-145.925
209.400	8.138	---	---	1685.625	Equation 6.10.9.1-1	1.000	1.000	-246.191	-35.958	-26.899	-169.146
209.500	8.138	---	---	1685.625	Equation 6.10.9.1-1	1.000	1.000	-246.224	-35.964	-26.903	-169.146
209.600	16.537	---	---	1685.625	Equation 6.10.9.1-1	1.000	1.000	4.982	0.293	0.219	-102.260
210.000	65.014	---	---	1685.625	Equation 6.10.9.1-1	1.000	1.000	3.529	0.149	0.112	25.869

Date:	8/2/2021	Span3-5ft-WB.lbsx	
Time:	3:01 PM	Bentley LEAP Bridge Steel [AASHTO LRFD 8th Ed. with 2017 Interims]	v21.00.00.28

SUMMARY REPORT

Load Rating Combination	Controlling POI Loc. (ft)	Based on	Controlling Equation	Rating Factor	Vehicle Tonnage (Tons)	Rating Tonnage (Tons)
Design Inventory	103.625	Flexure	Equation 6.10.7.1.1-1	1.689	---	---
Design Operating	103.625	Flexure	Equation 6.10.7.1.1-1	2.190	---	---
Permit	103.625	Flexure	Equation 6.10.7.1.1-1	2.052	59.995	123.114

Group01 Member 03

Design Inventory (Strength I) Permit

FLEXURE RATING

POI Loc. (ft)	Moment Rating Factor	Vehicle Tonnage (Tons)	Rating Tonnage (Tons)	Moment/Stress Resistance (kip-in / ksi)	Controlling Equation	φc	φs	DC1 (kip-in / ksi)	DC2 (kip-in / ksi)	DW (kip-ft / ksi)	flDC1 (ksi)	flDC2 (ksi)	flDW (ksi)	LL (kip-in / ksi)	flLL (ksi)
0.000	443.205	59.995	26590.072	48.881	Equation 6.10.8.1.1-1 lateral torsion buckling	1	1	-0.001	-0.001	-0.001	0.013	0.001	0.001	-0.019	0.275
0.400	21.824	59.995	1309.338	48.881	Equation 6.10.8.1.1-1 lateral torsion buckling	1	1	-0.009	0.000	0.000	0.111	0.011	0.008	-2.011	0.679
0.500	999.990	59.995	59994.402	232634.188	Equation 6.10.7.1.1-1	1	1	0.000	0.000	0.000	0.000	0.000	0.000	0.000	0.000

Date:	8/2/2021	Span3-5ft-WB.lbsx	
Time:	3:01 PM	Bentley LEAP Bridge Steel [AASHTO LRFD 8th Ed. with 2017 Interims]	v21.00.00.28

FLEXURE RATING

POI Loc. (ft)	Moment Rating Factor	Vehicle Tonnage (Tons)	Rating Tonnage (Tons)	Moment/Stress Resistance (kip-in / ksi)	Controlling Equation	φc	φs	DC1 (kip-in / ksi)	DC2 (kip-in / ksi)	DW (kip-ft / ksi)	flDC1 (ksi)	flDC2 (ksi)	flDW (ksi)	LL (kip-in / ksi)	flLL (ksi)
0.600	14.037	59.995	842.170	48.881	Equation 6.10.8.1.1-1 lateral torsion buckling	1	1	0.166	0.035	0.026	0.129	0.012	0.009	-3.247	0.743
11.500	7.592	59.995	455.474	232634.188	Equation 6.10.7.1.1-1	1	1	31269.386	4578.467	3425.009	0.058	0.011	0.008	21030.224	4.397
21.400	3.685	59.995	221.059	232634.188	Equation 6.10.7.1.1-1	1	1	56490.880	8233.453	6159.190	-0.020	0.009	0.007	35451.829	9.083
23.000	3.331	59.995	199.815	232634.188	Equation 6.10.7.1.1-1	1	1	60319.453	8785.257	6571.978	-0.044	0.009	0.007	38091.384	9.833
25.900	2.760	59.995	165.603	232634.188	Equation 6.10.7.1.1-1	1	1	67054.742	9751.949	7295.130	-0.019	0.008	0.006	42242.191	12.887
26.100	3.966	59.995	237.925	291248.988	Equation 6.10.7.1.1-1	1	1	67507.024	9834.298	7356.733	-0.014	0.004	0.003	42520.201	7.362
34.500	3.295	59.995	197.686	291248.988	Equation 6.10.7.1.1-1	1	1	85645.826	12443.260	9308.416	0.041	-0.007	-0.005	52871.211	2.336
41.900	2.538	59.995	152.293	291248.988	Equation 6.10.7.1.1-1	1	1	100001.538	14490.016	10839.532	0.167	-0.021	-0.016	61100.285	3.480
42.000	4.271	59.995	256.235	395608.291	Equation 6.10.7.1.1-1	1	1	100187.996	14533.511	10872.069	0.050	-0.006	-0.004	61218.666	1.006
42.100	4.259	59.995	255.524	395608.291	Equation 6.10.7.1.1-1	1	1	100371.113	14559.414	10891.446	0.050	-0.006	-0.005	61302.493	1.026

Date:	8/2/2021	Span3-5ft-WB.lbsx	
Time:	3:01 PM	Bentley LEAP Bridge Steel [AASHTO LRFD 8th Ed. with 2017 Interims]	v21.00.00.28

FLEXURE RATING

POI Loc. (ft)	Moment Rating Factor	Vehicle Tonnage (Tons)	Rating Tonnage (Tons)	Moment/Stress Resistance (kip-in / ksi)	Controlling Equation	φc	φs	DC1 (kip-in / ksi)	DC2 (kip-in / ksi)	DW (kip-ft / ksi)	flDC1 (ksi)	flDC2 (ksi)	flDW (ksi)	LL (kip-in / ksi)	flLL (ksi)
42.300	4.236	59.995	254.113	395608.291	Equation 6.10.7.1.1-1	1	1	100736.529	14611.093	10930.106	0.052	-0.006	-0.005	61470.147	1.064
46.000	3.796	59.995	227.750	395608.291	Equation 6.10.7.1.1-1	1	1	107292.768	15543.970	11627.961	0.088	-0.008	-0.006	65176.974	1.826
57.500	3.026	59.995	181.535	395608.291	Equation 6.10.7.1.1-1	1	1	125099.331	18086.239	13529.754	0.054	-0.008	-0.006	76128.336	1.454
63.200	2.775	59.995	166.493	395608.291	Equation 6.10.7.1.1-1	1	1	132482.412	19141.255	14318.979	0.081	-0.009	-0.007	80222.411	1.305
69.000	2.554	59.995	153.212	395608.291	Equation 6.10.7.1.1-1	1	1	139011.512	20085.678	15025.474	0.165	-0.012	-0.009	84196.746	1.279
80.500	2.252	59.995	135.115	395608.291	Equation 6.10.7.1.1-1	1	1	149116.314	21533.182	16108.304	0.096	-0.011	-0.008	89976.258	1.436
84.100	2.187	59.995	131.239	395608.291	Equation 6.10.7.1.1-1	1	1	151479.599	21871.188	16361.159	0.108	-0.011	-0.008	91238.197	1.501
92.000	2.075	59.995	124.491	395608.291	Equation 6.10.7.1.1-1	1	1	155328.727	22430.964	16779.908	0.206	-0.014	-0.010	93347.478	1.817
103.625	2.023	59.995	121.377	395608.291	Equation 6.10.7.1.1-1	1	1	157765.888	22775.313	17037.505	0.114	-0.012	-0.009	94624.362	1.706
105.000	2.023	59.995	121.366	395608.291	Equation 6.10.7.1.1-1	1	1	157790.279	22778.784	17040.103	0.116	-0.012	-0.009	94603.093	1.714
115.250	2.058	59.995	123.467	395608.291	Equation 6.10.7.1.1-1	1	1	156250.323	22562.378	16878.215	0.197	-0.013	-0.010	93853.728	1.682

Date:	8/2/2021	Span3-5ft-WB.lbsx	
Time:	3:01 PM	Bentley LEAP Bridge Steel [AASHTO LRFD 8th Ed. with 2017 Interims]	v21.00.00.28

FLEXURE RATING

POI Loc. (ft)	Moment Rating Factor	Vehicle Tonnage (Tons)	Rating Tonnage (Tons)	Moment/Stress Resistance (kip-in / ksi)	Controlling Equation	φc	φs	DC1 (kip-in / ksi)	DC2 (kip-in / ksi)	DW (kip-ft / ksi)	flDC1 (ksi)	flDC2 (ksi)	flDW (ksi)	LL (kip-in / ksi)	flLL (ksi)
125.900	2.188	59.995	131.275	395608.291	Equation 6.10.7.1.1-1	1	1	151477.263	21869.763	16360.090	0.102	-0.011	-0.008	90933.571	1.654
126.750	2.200	59.995	131.974	395608.291	Equation 6.10.7.1.1-1	1	1	150953.709	21795.009	16304.169	0.100	-0.011	-0.008	90735.714	1.652
138.250	2.467	59.995	148.031	395608.291	Equation 6.10.7.1.1-1	1	1	141764.695	20478.126	15319.050	0.150	-0.010	-0.008	85304.502	1.569
146.800	2.802	59.995	168.092	395608.291	Equation 6.10.7.1.1-1	1	1	132476.043	19137.333	14316.044	0.076	-0.008	-0.006	79839.705	1.097
149.750	2.935	59.995	176.107	395608.291	Equation 6.10.7.1.1-1	1	1	128773.149	18607.234	13919.495	0.068	-0.008	-0.006	77974.650	0.946
161.250	3.613	59.995	216.789	395608.291	Equation 6.10.7.1.1-1	1	1	111887.966	16192.051	12112.770	0.115	-0.008	-0.006	68706.954	0.986
167.700	4.216	59.995	252.936	395608.291	Equation 6.10.7.1.1-1	1	1	100724.076	14598.980	10921.044	0.051	-0.007	-0.005	62030.999	0.934
167.900	4.233	59.995	253.984	395608.291	Equation 6.10.7.1.1-1	1	1	100358.728	14547.139	10882.263	0.050	-0.007	-0.005	61839.364	0.953
168.000	2.521	59.995	151.240	291248.988	Equation 6.10.7.1.1-1	1	1	100175.641	14521.160	10862.829	0.166	-0.022	-0.017	61743.546	3.251
168.100	2.529	59.995	151.716	291248.988	Equation 6.10.7.1.1-1	1	1	99989.219	14476.637	10829.524	0.160	-0.022	-0.016	61624.411	3.267
172.750	2.880	59.995	172.794	291248.988	Equation 6.10.7.1.1-1	1	1	91146.011	13215.283	9885.943	0.078	-0.018	-0.014	56355.730	4.124

Date:	8/2/2021	Span3-5ft-WB.lbsx	
Time:	3:01 PM	Bentley LEAP Bridge Steel [AASHTO LRFD 8th Ed. with 2017 Interims]	v21.00.00.28

FLEXURE RATING

POI Loc. (ft)	Moment Rating Factor	Vehicle Tonnage (Tons)	Rating Tonnage (Tons)	Moment/Stress Resistance (kip-in / ksi)	Controlling Equation	φc	φs	DC1 (kip-in / ksi)	DC2 (kip-in / ksi)	DW (kip-ft / ksi)	flDC1 (ksi)	flDC2 (ksi)	flDW (ksi)	LL (kip-in / ksi)	flLL (ksi)
183.900	3.797	59.995	227.794	291248.988	Equation 6.10.7.1.1-1	1	1	67500.977	9813.212	7340.959	0.015	-0.018	-0.013	42488.655	9.176
184.100	2.630	59.995	157.782	232634.188	Equation 6.10.7.1.1-1	1	1	67046.059	9729.498	7278.335	0.036	-0.031	-0.023	42310.512	15.798
184.250	2.904	59.995	174.199	232634.188	Equation 6.10.7.1.1-1	1	1	66704.001	9676.863	7238.961	0.012	-0.019	-0.015	42104.124	10.249
188.600	3.687	59.995	221.182	232634.188	Equation 6.10.7.1.1-1	1	1	56466.582	8201.969	6135.639	0.045	-0.013	-0.010	36125.140	8.350
197.125	6.752	59.995	405.113	232634.188	Equation 6.10.7.1.1-1	1	1	34919.940	5076.006	3797.202	0.089	-0.002	-0.001	23355.104	4.617
209.400	166.399	59.995	9983.085	232634.188	Equation 6.10.7.1.1-1	1	1	393.340	60.727	45.428	0.152	0.017	0.013	319.623	0.975
209.500	999.990	59.995	59994.402	232634.188	Equation 6.10.7.1.1-1	1	1	0.000	0.000	0.000	0.000	0.000	0.000	0.000	0.000
209.600	142.567	59.995	8553.318	48.881	Equation 6.10.8.1.1-1 lateral torsion buckling	1	1	-0.009	-0.002	-0.001	0.118	0.013	0.010	-0.083	0.778
210.000	386.722	59.995	23201.387	48.881	Equation 6.10.8.1.1-1 lateral torsion buckling	1	1	-0.001	0.000	0.000	0.012	0.002	0.001	-0.025	0.305

SHEAR RATING

POI Loc. (ft)	Shear Rating Factor	Vehicle Tonnage (Tons)	Rating Tonnage (Tons)	Shear Resistance (kip)	Controlling Equation	φc	φs	DC1 (kip)	DC2 (kip)	DW (kip)	LL (kip)
0.000	30.879	59.995	1852.562	1685.625	Equation 6.10.9.1-1	1.000	1.000	-3.446	-0.154	-0.115	-54.468
0.400	15.029	59.995	901.672	1685.625	Equation 6.10.9.1-1	1.000	1.000	-4.900	-0.289	-0.216	112.517
0.500	7.380	59.995	442.784	1685.625	Equation 6.10.9.1-1	1.000	1.000	249.585	35.854	26.821	186.084
0.600	7.381	59.995	442.798	1685.625	Equation 6.10.9.1-1	1.000	1.000	249.552	35.848	26.817	186.084
11.500	2.789	59.995	167.332	761.178	Equation 6.10.9.1-1	1.000	1.000	223.909	32.097	24.011	172.515
21.400	3.290	59.995	197.412	761.178	Equation 6.10.9.1-1	1.000	1.000	201.295	28.696	21.466	154.908
23.000	3.325	59.995	199.489	761.178	Equation 6.10.9.1-1	1.000	1.000	198.008	28.144	21.054	154.574
25.900	5.763	59.995	345.760	1124.840	Equation 6.10.9.1-1	1.000	1.000	190.660	27.151	20.310	153.860
26.100	5.780	59.995	346.795	1124.840	Equation 6.10.9.1-1	1.000	1.000	189.873	27.085	20.261	153.557
34.500	3.331	59.995	199.870	678.990	Equation 6.10.9.1-1	1.000	1.000	170.313	24.200	18.103	139.991
41.900	3.719	59.995	223.120	678.990	Equation 6.10.9.1-1	1.000	1.000	153.513	21.659	16.203	131.115
42.000	5.445	59.995	326.702	904.929	Equation 6.10.9.1-1	1.000	1.000	153.307	21.625	16.177	131.084

SHEAR RATING

POI Loc. (ft)	Shear Rating Factor	Vehicle Tonnage (Tons)	Rating Tonnage (Tons)	Shear Resistance (kip)	Controlling Equation	φc	φs	DC1 (kip)	DC2 (kip)	DW (kip)	LL (kip)
42.100	5.459	59.995	327.485	904.929	Equation 6.10.9.1-1	1.000	1.000	152.648	21.594	16.154	130.902
42.300	5.478	59.995	328.660	904.929	Equation 6.10.9.1-1	1.000	1.000	152.206	21.525	16.102	130.536
46.000	4.453	59.995	267.158	747.024	Equation 6.10.9.1-1	1.000	1.000	144.205	20.255	15.152	127.422
57.500	5.202	59.995	312.122	747.024	Equation 6.10.9.1-1	1.000	1.000	115.389	16.312	12.202	115.930
63.200	5.776	59.995	346.505	747.024	Equation 6.10.9.1-1	1.000	1.000	101.390	14.356	10.740	107.442
69.000	6.044	59.995	362.637	747.024	Equation 6.10.9.1-1	1.000	1.000	88.301	12.372	9.255	105.402
80.500	7.008	59.995	420.429	747.024	Equation 6.10.9.1-1	1.000	1.000	59.575	8.415	6.295	96.000
84.100	7.410	59.995	444.562	747.024	Equation 6.10.9.1-1	1.000	1.000	50.684	7.181	5.372	92.279
92.000	7.770	59.995	466.191	742.922	Equation 6.10.9.1-1	1.000	1.000	32.656	4.479	3.351	90.398
103.625	9.105	59.995	546.256	742.922	Equation 6.10.9.1-1	1.000	1.000	3.652	0.472	0.353	81.103
105.000	9.453	59.995	567.117	742.922	Equation 6.10.9.1-1	1.000	1.000	-0.017	-0.027	-0.020	78.600

SHEAR RATING

POI Loc. (ft)	Shear Rating Factor	Vehicle Tonnage (Tons)	Rating Tonnage (Tons)	Shear Resistance (kip)	Controlling Equation	φc	φs	DC1 (kip)	DC2 (kip)	DW (kip)	LL (kip)
115.250	8.374	59.995	502.371	742.922	Equation 6.10.9.1-1	1.000	1.000	-26.241	-3.565	-2.667	-84.844
125.900	7.542	59.995	452.480	747.024	Equation 6.10.9.1-1	1.000	1.000	-50.577	-7.211	-5.395	-90.672
126.750	7.401	59.995	444.048	747.024	Equation 6.10.9.1-1	1.000	1.000	-52.926	-7.501	-5.611	-92.007
138.250	6.411	59.995	384.643	747.024	Equation 6.10.9.1-1	1.000	1.000	-81.877	-11.473	-8.583	-100.619
146.800	5.936	59.995	356.158	747.024	Equation 6.10.9.1-1	1.000	1.000	-101.249	-14.401	-10.773	-104.540
149.750	5.643	59.995	338.534	747.024	Equation 6.10.9.1-1	1.000	1.000	-108.706	-15.413	-11.530	-108.348
161.250	4.783	59.995	286.968	747.024	Equation 6.10.9.1-1	1.000	1.000	-137.700	-19.382	-14.499	-120.305
167.700	5.236	59.995	314.111	831.150	Equation 6.10.9.1-1	1.000	1.000	-152.199	-21.594	-16.154	-122.469
167.900	5.215	59.995	312.860	831.150	Equation 6.10.9.1-1	1.000	1.000	-152.641	-21.663	-16.205	-122.851
168.000	3.541	59.995	212.417	626.874	Equation 6.10.9.1-1	1.000	1.000	-153.311	-21.694	-16.229	-123.042
168.100	3.538	59.995	212.247	626.874	Equation 6.10.9.1-1	1.000	1.000	-153.517	-21.729	-16.255	-123.065

SHEAR RATING

POI Loc. (ft)	Shear Rating Factor	Vehicle Tonnage (Tons)	Rating Tonnage (Tons)	Shear Resistance (kip)	Controlling Equation	φc	φs	DC1 (kip)	DC2 (kip)	DW (kip)	LL (kip)
172.750	3.304	59.995	198.211	626.874	Equation 6.10.9.1-1	1.000	1.000	-164.068	-23.326	-17.450	-127.741
183.900	9.516	59.995	570.892	1557.297	Equation 6.10.9.1-1	1.000	1.000	-189.777	-27.155	-20.314	-138.724
184.100	9.504	59.995	570.178	1557.297	Equation 6.10.9.1-1	1.000	1.000	-190.475	-27.227	-20.368	-138.811
184.250	3.176	59.995	190.531	684.644	Equation 6.10.9.1-1	1.000	1.000	-191.970	-27.279	-20.406	-140.119
188.600	3.006	59.995	180.324	684.644	Equation 6.10.9.1-1	1.000	1.000	-201.354	-28.774	-21.525	-144.059
197.125	2.619	59.995	157.144	684.644	Equation 6.10.9.1-1	1.000	1.000	-220.662	-31.705	-23.718	-155.982
209.400	7.760	59.995	465.560	1685.625	Equation 6.10.9.1-1	1.000	1.000	-249.416	-35.930	-26.878	-176.985
209.500	7.760	59.995	465.545	1685.625	Equation 6.10.9.1-1	1.000	1.000	-249.450	-35.936	-26.883	-176.985
209.600	15.807	59.995	948.363	1685.625	Equation 6.10.9.1-1	1.000	1.000	4.901	0.295	0.220	-106.978
210.000	38.859	59.995	2331.365	1685.625	Equation 6.10.9.1-1	1.000	1.000	3.447	0.149	0.111	43.282

Design Inventory (Strength I) Design Inventory

Date:	8/2/2021	Span3-5ft-WB.lbsx	
Time:	3:01 PM	Bentley LEAP Bridge Steel [AASHTO LRFD 8th Ed. with 2017 Interims]	v21.00.00.28

FLEXURE RATING

POI Loc. (ft)	Moment Rating Factor	Vehicle Tonnage (Tons)	Rating Tonnage (Tons)	Moment/Stress Resistance (kip-in / ksi)	Controlling Equation	φc	φs	DC1 (kip-in / ksi)	DC2 (kip-in / ksi)	DW (kip-ft / ksi)	flDC1 (ksi)	flDC2 (ksi)	flDW (ksi)	LL (kip-in / ksi)	flLL (ksi)
0.000	352.987	---	---	48.881	Equation 6.10.8.1.1-1 lateral torsion buckling	1	1	-0.001	-0.001	-0.001	0.013	0.001	0.001	-0.015	0.370
0.400	19.019	---	---	48.881	Equation 6.10.8.1.1-1 lateral torsion buckling	1	1	-0.009	0.000	0.000	0.112	0.011	0.009	-2.261	0.920
0.500	999.990	---	---	232634.188	Equation 6.10.7.1.1-1	1	1	0.000	0.000	0.000	0.000	0.000	0.000	0.000	0.000
0.600	12.274	---	---	48.881	Equation 6.10.8.1.1-1 lateral torsion buckling	1	1	0.166	0.035	0.026	0.129	0.012	0.009	-3.662	1.004
11.500	6.323	---	---	232634.188	Equation 6.10.7.1.1-1	1	1	31269.386	4578.467	3425.009	0.058	0.011	0.008	24673.432	5.852
21.400	3.023	---	---	232634.188	Equation 6.10.7.1.1-1	1	1	56490.880	8233.453	6159.190	-0.020	0.009	0.007	42251.395	12.096
23.000	2.737	---	---	232634.188	Equation 6.10.7.1.1-1	1	1	60319.453	8785.257	6571.978	-0.044	0.009	0.007	45314.640	13.096
25.900	2.256	---	---	232634.188	Equation 6.10.7.1.1-1	1	1	67054.742	9751.949	7295.130	-0.019	0.008	0.006	50382.276	17.234
26.100	3.254	---	---	291248.988	Equation 6.10.7.1.1-1	1	1	67507.024	9834.298	7356.733	-0.014	0.004	0.003	50723.229	9.816

Date:	8/2/2021	Span3-5ft-WB.lbsx	
Time:	3:01 PM	Bentley LEAP Bridge Steel [AASHTO LRFD 8th Ed. with 2017 Interims]	v21.00.00.28

FLEXURE RATING

POI Loc. (ft)	Moment Rating Factor	Vehicle Tonnage (Tons)	Rating Tonnage (Tons)	Moment/Stress Resistance (kip-in / ksi)	Controlling Equation	φc	φs	DC1 (kip-in / ksi)	DC2 (kip-in / ksi)	DW (kip-ft / ksi)	flDC1 (ksi)	flDC2 (ksi)	flDW (ksi)	LL (kip-in / ksi)	flLL (ksi)
34.500	2.738	---	---	291248.988	Equation 6.10.7.1.1-1	1	1	85645.826	12443.260	9308.416	0.041	-0.007	-0.005	63568.286	2.865
41.900	2.094	---	---	291248.988	Equation 6.10.7.1.1-1	1	1	100001.538	14490.016	10839.532	0.167	-0.021	-0.016	73881.557	4.363
42.000	3.527	---	---	395608.291	Equation 6.10.7.1.1-1	1	1	100187.996	14533.511	10872.069	0.050	-0.006	-0.004	74028.570	1.265
42.100	3.517	---	---	395608.291	Equation 6.10.7.1.1-1	1	1	100371.113	14559.414	10891.446	0.051	-0.006	-0.005	74141.687	1.293
42.300	3.495	---	---	395608.291	Equation 6.10.7.1.1-1	1	1	100736.529	14611.093	10930.106	0.052	-0.006	-0.005	74367.920	1.349
46.000	3.115	---	---	395608.291	Equation 6.10.7.1.1-1	1	1	107292.768	15543.970	11627.961	0.089	-0.008	-0.006	79020.060	2.432
57.500	2.497	---	---	395608.291	Equation 6.10.7.1.1-1	1	1	125099.331	18086.239	13529.754	0.055	-0.008	-0.006	92177.820	1.806
63.200	2.288	---	---	395608.291	Equation 6.10.7.1.1-1	1	1	132482.412	19141.255	14318.979	0.082	-0.009	-0.007	97351.983	1.561
69.000	2.101	---	---	395608.291	Equation 6.10.7.1.1-1	1	1	139011.512	20085.678	15025.474	0.167	-0.012	-0.009	102266.640	1.580
80.500	1.853	---	---	395608.291	Equation 6.10.7.1.1-1	1	1	149116.314	21533.182	16108.304	0.097	-0.011	-0.008	109389.420	1.722
84.100	1.799	---	---	395608.291	Equation 6.10.7.1.1-1	1	1	151479.599	21871.188	16361.159	0.109	-0.011	-0.008	111019.570	1.799

Date:	8/2/2021	Span3-5ft-WB.lbsx	
Time:	3:01 PM	Bentley LEAP Bridge Steel [AASHTO LRFD 8th Ed. with 2017 Interims]	v21.00.00.28

FLEXURE RATING

POI Loc. (ft)	Moment Rating Factor	Vehicle Tonnage (Tons)	Rating Tonnage (Tons)	Moment/Stress Resistance (kip-in / ksi)	Controlling Equation	φc	φs	DC1 (kip-in / ksi)	DC2 (kip-in / ksi)	DW (kip-ft / ksi)	flDC1 (ksi)	flDC2 (ksi)	flDW (ksi)	LL (kip-in / ksi)	flLL (ksi)
92.000	1.700	---	---	395608.291	Equation 6.10.7.1.1-1	1	1	155328.727	22430.964	16779.908	0.208	-0.014	-0.010	113790.390	2.302
103.625	1.659	---	---	395608.291	Equation 6.10.7.1.1-1	1	1	157765.888	22775.313	17037.505	0.116	-0.012	-0.009	115366.440	2.077
105.000	1.659	---	---	395608.291	Equation 6.10.7.1.1-1	1	1	157790.279	22778.784	17040.103	0.118	-0.012	-0.009	115350.941	2.079
115.250	1.685	---	---	395608.291	Equation 6.10.7.1.1-1	1	1	156250.323	22562.378	16878.215	0.199	-0.013	-0.010	114490.110	2.109
125.900	1.795	---	---	395608.291	Equation 6.10.7.1.1-1	1	1	151477.263	21869.763	16360.090	0.103	-0.011	-0.008	110865.402	2.019
126.750	1.805	---	---	395608.291	Equation 6.10.7.1.1-1	1	1	150953.709	21795.009	16304.169	0.101	-0.011	-0.008	110580.330	2.022
138.250	2.020	---	---	395608.291	Equation 6.10.7.1.1-1	1	1	141764.695	20478.126	15319.050	0.151	-0.011	-0.008	104022.870	2.010
146.800	2.306	---	---	395608.291	Equation 6.10.7.1.1-1	1	1	132476.043	19137.333	14316.044	0.077	-0.008	-0.006	97209.670	1.236
149.750	2.421	---	---	395608.291	Equation 6.10.7.1.1-1	1	1	128773.149	18607.234	13919.495	0.068	-0.008	-0.006	94773.840	1.023
161.250	2.989	---	---	395608.291	Equation 6.10.7.1.1-1	1	1	111887.966	16192.051	12112.770	0.116	-0.008	-0.006	83174.700	1.141
167.700	3.491	---	---	395608.291	Equation 6.10.7.1.1-1	1	1	100724.076	14598.980	10921.044	0.052	-0.007	-0.005	74985.003	1.095

Date:	8/2/2021	Span3-5ft-WB.lbsx	
Time:	3:01 PM	Bentley LEAP Bridge Steel [AASHTO LRFD 8th Ed. with 2017 Interims]	v21.00.00.28

FLEXURE RATING

POI Loc. (ft)	Moment Rating Factor	Vehicle Tonnage (Tons)	Rating Tonnage (Tons)	Moment/Stress Resistance (kip-in / ksi)	Controlling Equation	φc	φs	DC1 (kip-in / ksi)	DC2 (kip-in / ksi)	DW (kip-ft / ksi)	flDC1 (ksi)	flDC2 (ksi)	flDW (ksi)	LL (kip-in / ksi)	flLL (ksi)
167.900	3.505	---	---	395608.291	Equation 6.10.7.1.1-1	1	1	100358.728	14547.139	10882.263	0.050	-0.007	-0.005	74740.221	1.125
168.000	2.088	---	---	291248.988	Equation 6.10.7.1.1-1	1	1	100175.641	14521.160	10862.829	0.167	-0.022	-0.017	74617.830	3.856
168.100	2.094	---	---	291248.988	Equation 6.10.7.1.1-1	1	1	99989.219	14476.637	10829.524	0.160	-0.022	-0.016	74471.912	3.890
172.750	2.370	---	---	291248.988	Equation 6.10.7.1.1-1	1	1	91146.011	13215.283	9885.943	0.078	-0.018	-0.014	67963.114	5.437
183.900	3.083	---	---	291248.988	Equation 6.10.7.1.1-1	1	1	67500.977	9813.212	7340.959	0.016	-0.018	-0.013	50916.831	12.383
184.100	2.131	---	---	232634.188	Equation 6.10.7.1.1-1	1	1	67046.059	9729.498	7278.335	0.037	-0.031	-0.023	50533.728	21.388
184.250	2.379	---	---	232634.188	Equation 6.10.7.1.1-1	1	1	66704.001	9676.863	7238.961	0.012	-0.019	-0.015	50253.000	13.776
188.600	3.035	---	---	232634.188	Equation 6.10.7.1.1-1	1	1	56466.582	8201.969	6135.639	0.046	-0.014	-0.010	42860.280	11.234
197.125	5.643	---	---	232634.188	Equation 6.10.7.1.1-1	1	1	34919.940	5076.006	3797.202	0.090	-0.002	-0.001	27260.680	6.211
209.400	137.771	---	---	232634.188	Equation 6.10.7.1.1-1	1	1	393.340	60.727	45.428	0.152	0.017	0.013	362.521	1.199
209.500	999.990	---	---	232634.188	Equation 6.10.7.1.1-1	1	1	0.000	0.000	0.000	0.000	0.000	0.000	0.000	0.000

Date:	8/2/2021	Span3-5ft-WB.lbsx	
Time:	3:01 PM	Bentley LEAP Bridge Steel [AASHTO LRFD 8th Ed. with 2017 Interims]	v21.00.00.28

FLEXURE RATING

POI Loc. (ft)	Moment Rating Factor	Vehicle Tonnage (Tons)	Rating Tonnage (Tons)	Moment/Stress Resistance (kip-in / ksi)	Controlling Equation	φc	φs	DC1 (kip-in / ksi)	DC2 (kip-in / ksi)	DW (kip-ft / ksi)	flDC1 (ksi)	flDC2 (ksi)	flDW (ksi)	LL (kip-in / ksi)	flLL (ksi)
209.600	124.984	---	---	48.881	Equation 6.10.8.1.1-1 lateral torsion buckling	1	1	-0.009	-0.002	-0.001	0.118	0.013	0.010	-0.066	0.974
210.000	314.780	---	---	48.881	Equation 6.10.8.1.1-1 lateral torsion buckling	1	1	-0.001	0.000	0.000	0.012	0.002	0.001	-0.020	0.406

SHEAR RATING

POI Loc. (ft)	Shear Rating Factor	Vehicle Tonnage (Tons)	Rating Tonnage (Tons)	Shear Resistance (kip)	Controlling Equation	φc	φs	DC1 (kip)	DC2 (kip)	DW (kip)	LL (kip)
0.000	39.341	---	---	1685.625	Equation 6.10.9.1-1	1.000	1.000	-3.446	-0.154	-0.115	-42.752
0.400	12.860	---	---	1685.625	Equation 6.10.9.1-1	1.000	1.000	-4.900	-0.289	-0.216	131.500
0.500	6.308	---	---	1685.625	Equation 6.10.9.1-1	1.000	1.000	249.585	35.854	26.821	217.733
0.600	6.308	---	---	1685.625	Equation 6.10.9.1-1	1.000	1.000	249.552	35.848	26.817	217.733
11.500	2.407	---	---	761.178	Equation 6.10.9.1-1	1.000	1.000	223.909	32.097	24.011	199.887

SHEAR RATING

POI Loc. (ft)	Shear Rating Factor	Vehicle Tonnage (Tons)	Rating Tonnage (Tons)	Shear Resistance (kip)	Controlling Equation	φc	φs	DC1 (kip)	DC2 (kip)	DW (kip)	LL (kip)
21.400	2.887	---	---	761.178	Equation 6.10.9.1-1	1.000	1.000	201.295	28.696	21.466	176.558
23.000	2.913	---	---	761.178	Equation 6.10.9.1-1	1.000	1.000	198.008	28.144	21.054	176.449
25.900	5.058	---	---	1124.840	Equation 6.10.9.1-1	1.000	1.000	190.660	27.151	20.310	175.312
26.100	5.074	---	---	1124.840	Equation 6.10.9.1-1	1.000	1.000	189.873	27.085	20.261	174.935
34.500	2.957	---	---	678.990	Equation 6.10.9.1-1	1.000	1.000	170.313	24.200	18.103	157.741
41.900	3.310	---	---	678.990	Equation 6.10.9.1-1	1.000	1.000	153.513	21.659	16.203	147.331
42.000	4.845	---	---	904.929	Equation 6.10.9.1-1	1.000	1.000	153.307	21.625	16.177	147.320
42.100	4.858	---	---	904.929	Equation 6.10.9.1-1	1.000	1.000	152.648	21.594	16.154	147.075
42.300	4.878	---	---	904.929	Equation 6.10.9.1-1	1.000	1.000	152.206	21.525	16.102	146.586
46.000	3.984	---	---	747.024	Equation 6.10.9.1-1	1.000	1.000	144.205	20.255	15.152	142.421
57.500	4.730	---	---	747.024	Equation 6.10.9.1-1	1.000	1.000	115.389	16.312	12.202	127.514

SHEAR RATING

POI Loc. (ft)	Shear Rating Factor	Vehicle Tonnage (Tons)	Rating Tonnage (Tons)	Shear Resistance (kip)	Controlling Equation	φc	φs	DC1 (kip)	DC2 (kip)	DW (kip)	LL (kip)
63.200	5.308	---	---	747.024	Equation 6.10.9.1-1	1.000	1.000	101.390	14.356	10.740	116.897
69.000	5.582	---	---	747.024	Equation 6.10.9.1-1	1.000	1.000	88.301	12.372	9.255	114.128
80.500	6.521	---	---	747.024	Equation 6.10.9.1-1	1.000	1.000	59.575	8.415	6.295	103.170
84.100	6.945	---	---	747.024	Equation 6.10.9.1-1	1.000	1.000	50.684	7.181	5.372	98.458
92.000	7.405	---	---	742.922	Equation 6.10.9.1-1	1.000	1.000	32.656	4.479	3.351	94.863
103.625	8.741	---	---	742.922	Equation 6.10.9.1-1	1.000	1.000	3.652	0.472	0.353	84.480
105.000	9.141	---	---	742.922	Equation 6.10.9.1-1	1.000	1.000	-0.017	-0.027	-0.020	81.280
115.250	7.989	---	---	742.922	Equation 6.10.9.1-1	1.000	1.000	-26.241	-3.565	-2.667	-88.926
125.900	7.093	---	---	747.024	Equation 6.10.9.1-1	1.000	1.000	-50.577	-7.211	-5.395	-96.415
126.750	6.927	---	---	747.024	Equation 6.10.9.1-1	1.000	1.000	-52.926	-7.501	-5.611	-98.308
138.250	5.949	---	---	747.024	Equation 6.10.9.1-1	1.000	1.000	-81.877	-11.473	-8.583	-108.435

SHEAR RATING

POI Loc. (ft)	Shear Rating Factor	Vehicle Tonnage (Tons)	Rating Tonnage (Tons)	Shear Resistance (kip)	Controlling Equation	φc	φs	DC1 (kip)	DC2 (kip)	DW (kip)	LL (kip)
146.800	5.440	---	---	747.024	Equation 6.10.9.1-1	1.000	1.000	-101.249	-14.401	-10.773	-114.080
149.750	5.134	---	---	747.024	Equation 6.10.9.1-1	1.000	1.000	-108.706	-15.413	-11.530	-119.094
161.250	4.344	---	---	747.024	Equation 6.10.9.1-1	1.000	1.000	-137.700	-19.382	-14.499	-132.475
167.700	4.624	---	---	831.150	Equation 6.10.9.1-1	1.000	1.000	-152.199	-21.594	-16.154	-138.668
167.900	4.605	---	---	831.150	Equation 6.10.9.1-1	1.000	1.000	-152.641	-21.663	-16.205	-139.123
168.000	3.126	---	---	626.874	Equation 6.10.9.1-1	1.000	1.000	-153.311	-21.694	-16.229	-139.351
168.100	3.124	---	---	626.874	Equation 6.10.9.1-1	1.000	1.000	-153.517	-21.729	-16.255	-139.374
172.750	2.915	---	---	626.874	Equation 6.10.9.1-1	1.000	1.000	-164.068	-23.326	-17.450	-144.759
183.900	8.355	---	---	1557.297	Equation 6.10.9.1-1	1.000	1.000	-189.777	-27.155	-20.314	-157.995
184.100	8.343	---	---	1557.297	Equation 6.10.9.1-1	1.000	1.000	-190.475	-27.227	-20.368	-158.115
184.250	2.779	---	---	684.644	Equation 6.10.9.1-1	1.000	1.000	-191.970	-27.279	-20.406	-160.137

Date:	8/2/2021	Span3-5ft-WB.lbsx	
Time:	3:01 PM	Bentley LEAP Bridge Steel [AASHTO LRFD 8th Ed. with 2017 Interims]	v21.00.00.28

SHEAR RATING

POI Loc. (ft)	Shear Rating Factor	Vehicle Tonnage (Tons)	Rating Tonnage (Tons)	Shear Resistance (kip)	Controlling Equation	φc	φs	DC1 (kip)	DC2 (kip)	DW (kip)	LL (kip)
188.600	2.623	---	---	684.644	Equation 6.10.9.1-1	1.000	1.000	-201.354	-28.774	-21.525	-165.050
197.125	2.281	---	---	684.644	Equation 6.10.9.1-1	1.000	1.000	-220.662	-31.705	-23.718	-179.141
209.400	6.705	---	---	1685.625	Equation 6.10.9.1-1	1.000	1.000	-249.416	-35.930	-26.878	-204.827
209.500	6.705	---	---	1685.625	Equation 6.10.9.1-1	1.000	1.000	-249.450	-35.936	-26.883	-204.827
209.600	13.644	---	---	1685.625	Equation 6.10.9.1-1	1.000	1.000	4.901	0.295	0.220	-123.938
210.000	47.846	---	---	1685.625	Equation 6.10.9.1-1	1.000	1.000	3.447	0.149	0.111	35.153

Design Operating (Strength I) **Design Operating**

FLEXURE RATING

POI Loc. (ft)	Moment Rating Factor	Vehicle Tonnage (Tons)	Rating Tonnage (Tons)	Moment/Stress Resistance (kip-in / ksi)	Controlling Equation	φc	φs	DC1 (kip-in / ksi)	DC2 (kip-in / ksi)	DW (kip-ft / ksi)	flDC1 (ksi)	flDC2 (ksi)	flDW (ksi)	LL (kip-in / ksi)	flLL (ksi)
0.000	459.072	---	---	48.881	Equation 6.10.8.1.1-1 lateral torsion buckling	1	1	-0.001	-0.001	-0.001	0.013	0.001	0.001	-0.012	0.284

Date:	8/2/2021	Span3-5ft-WB.lbsx	
Time:	3:01 PM	Bentley LEAP Bridge Steel [AASHTO LRFD 8th Ed. with 2017 Interims]	v21.00.00.28

FLEXURE RATING

POI Loc. (ft)	Moment Rating Factor	Vehicle Tonnage (Tons)	Rating Tonnage (Tons)	Moment/Stress Resistance (kip-in / ksi)	Controlling Equation	φc	φs	DC1 (kip-in / ksi)	DC2 (kip-in / ksi)	DW (kip-ft / ksi)	flDC1 (ksi)	flDC2 (ksi)	flDW (ksi)	LL (kip-in / ksi)	flLL (ksi)
0.400	24.665	---	---	48.881	Equation 6.10.8.1.1-1 lateral torsion buckling	1	1	-0.009	0.000	0.000	0.111	0.011	0.008	-1.744	0.707
0.500	999.990	---	---	232634.188	Equation 6.10.7.1.1-1	1	1	0.000	0.000	0.000	0.000	0.000	0.000	0.000	0.000
0.600	15.916	---	---	48.881	Equation 6.10.8.1.1-1 lateral torsion buckling	1	1	0.166	0.035	0.026	0.129	0.012	0.009	-2.825	0.772
11.500	8.200	---	---	232634.188	Equation 6.10.7.1.1-1	1	1	31269.386	4578.467	3425.009	0.058	0.011	0.008	19033.790	4.505
21.400	3.921	---	---	232634.188	Equation 6.10.7.1.1-1	1	1	56490.880	8233.453	6159.190	-0.020	0.009	0.007	32593.933	9.311
23.000	3.550	---	---	232634.188	Equation 6.10.7.1.1-1	1	1	60319.453	8785.257	6571.978	-0.044	0.009	0.007	34957.008	10.080
25.900	2.930	---	---	232634.188	Equation 6.10.7.1.1-1	1	1	67054.742	9751.949	7295.130	-0.019	0.008	0.006	38866.327	13.175
26.100	4.222	---	---	291248.988	Equation 6.10.7.1.1-1	1	1	67507.024	9834.298	7356.733	-0.014	0.004	0.003	39129.348	7.542
34.500	3.550	---	---	291248.988	Equation 6.10.7.1.1-1	1	1	85645.826	12443.260	9308.416	0.041	-0.007	-0.005	49038.392	2.202
41.900	2.716	---	---	291248.988	Equation 6.10.7.1.1-1	1	1	100001.538	14490.016	10839.532	0.167	-0.021	-0.016	56994.344	3.350

Date:	8/2/2021	Span3-5ft-WB.lbsx	
Time:	3:01 PM	Bentley LEAP Bridge Steel [AASHTO LRFD 8th Ed. with 2017 Interims]	v21.00.00.28

FLEXURE RATING

POI Loc. (ft)	Moment Rating Factor	Vehicle Tonnage (Tons)	Rating Tonnage (Tons)	Moment/Stress Resistance (kip-in / ksi)	Controlling Equation	φc	φs	DC1 (kip-in / ksi)	DC2 (kip-in / ksi)	DW (kip-ft / ksi)	flDC1 (ksi)	flDC2 (ksi)	flDW (ksi)	LL (kip-in / ksi)	flLL (ksi)
42.000	4.573	---	---	395608.291	Equation 6.10.7.1.1-1	1	1	100187.996	14533.511	10872.069	0.049	-0.006	-0.004	57107.754	0.971
42.100	4.559	---	---	395608.291	Equation 6.10.7.1.1-1	1	1	100371.113	14559.414	10891.446	0.050	-0.006	-0.005	57195.015	0.993
42.300	4.532	---	---	395608.291	Equation 6.10.7.1.1-1	1	1	100736.529	14611.093	10930.106	0.052	-0.006	-0.005	57369.538	1.036
46.000	4.040	---	---	395608.291	Equation 6.10.7.1.1-1	1	1	107292.768	15543.970	11627.961	0.088	-0.008	-0.006	60958.332	1.857
57.500	3.238	---	---	395608.291	Equation 6.10.7.1.1-1	1	1	125099.331	18086.239	13529.754	0.054	-0.008	-0.006	71108.604	1.380
63.200	2.967	---	---	395608.291	Equation 6.10.7.1.1-1	1	1	132482.412	19141.255	14318.979	0.081	-0.009	-0.007	75100.101	1.192
69.000	2.725	---	---	395608.291	Equation 6.10.7.1.1-1	1	1	139011.512	20085.678	15025.474	0.164	-0.012	-0.009	78891.408	1.203
80.500	2.403	---	---	395608.291	Equation 6.10.7.1.1-1	1	1	149116.314	21533.182	16108.304	0.096	-0.011	-0.008	84386.124	1.311
84.100	2.332	---	---	395608.291	Equation 6.10.7.1.1-1	1	1	151479.599	21871.188	16361.159	0.107	-0.011	-0.008	85643.668	1.370
92.000	2.205	---	---	395608.291	Equation 6.10.7.1.1-1	1	1	155328.727	22430.964	16779.908	0.205	-0.014	-0.010	87781.158	1.749
103.625	2.152	---	---	395608.291	Equation 6.10.7.1.1-1	1	1	157765.888	22775.313	17037.505	0.114	-0.012	-0.009	88996.968	1.578

Date:	8/2/2021	Span3-5ft-WB.lbsx	
Time:	3:01 PM	Bentley LEAP Bridge Steel [AASHTO LRFD 8th Ed. with 2017 Interims]	v21.00.00.28

FLEXURE RATING

POI Loc. (ft)	Moment Rating Factor	Vehicle Tonnage (Tons)	Rating Tonnage (Tons)	Moment/Stress Resistance (kip-in / ksi)	Controlling Equation	φc	φs	DC1 (kip-in / ksi)	DC2 (kip-in / ksi)	DW (kip-ft / ksi)	flDC1 (ksi)	flDC2 (ksi)	flDW (ksi)	LL (kip-in / ksi)	flLL (ksi)
105.000	2.152	---	---	395608.291	Equation 6.10.7.1.1-1	1	1	157790.279	22778.784	17040.103	0.116	-0.012	-0.009	88985.011	1.580
115.250	2.186	---	---	395608.291	Equation 6.10.7.1.1-1	1	1	156250.323	22562.378	16878.215	0.196	-0.013	-0.010	88320.942	1.605
125.900	2.327	---	---	395608.291	Equation 6.10.7.1.1-1	1	1	151477.263	21869.763	16360.090	0.101	-0.011	-0.008	85524.739	1.537
126.750	2.341	---	---	395608.291	Equation 6.10.7.1.1-1	1	1	150953.709	21795.009	16304.169	0.100	-0.011	-0.008	85304.826	1.539
138.250	2.619	---	---	395608.291	Equation 6.10.7.1.1-1	1	1	141764.695	20478.126	15319.050	0.149	-0.010	-0.008	80246.214	1.535
146.800	2.989	---	---	395608.291	Equation 6.10.7.1.1-1	1	1	132476.043	19137.333	14316.044	0.076	-0.008	-0.006	74990.317	0.943
149.750	3.139	---	---	395608.291	Equation 6.10.7.1.1-1	1	1	128773.149	18607.234	13919.495	0.068	-0.008	-0.006	73111.248	0.781
161.250	3.875	---	---	395608.291	Equation 6.10.7.1.1-1	1	1	111887.966	16192.051	12112.770	0.115	-0.008	-0.006	64163.340	0.875
167.700	4.526	---	---	395608.291	Equation 6.10.7.1.1-1	1	1	100724.076	14598.980	10921.044	0.051	-0.007	-0.005	57845.574	0.840
167.900	4.544	---	---	395608.291	Equation 6.10.7.1.1-1	1	1	100358.728	14547.139	10882.263	0.050	-0.007	-0.005	57656.742	0.863
168.000	2.708	---	---	291248.988	Equation 6.10.7.1.1-1	1	1	100175.641	14521.160	10862.829	0.166	-0.022	-0.017	57562.326	2.960

Date:	8/2/2021	Span3-5ft-WB.lbsx	
Time:	3:01 PM	Bentley LEAP Bridge Steel [AASHTO LRFD 8th Ed. with 2017 Interims]	v21.00.00.28

FLEXURE RATING

POI Loc. (ft)	Moment Rating Factor	Vehicle Tonnage (Tons)	Rating Tonnage (Tons)	Moment/Stress Resistance (kip-in / ksi)	Controlling Equation	φc	φs	DC1 (kip-in / ksi)	DC2 (kip-in / ksi)	DW (kip-ft / ksi)	flDC1 (ksi)	flDC2 (ksi)	flDW (ksi)	LL (kip-in / ksi)	flLL (ksi)
168.100	2.716	---	---	291248.988	Equation 6.10.7.1.1-1	1	1	99989.219	14476.637	10829.524	0.159	-0.022	-0.016	57449.760	2.986
172.750	3.073	---	---	291248.988	Equation 6.10.7.1.1-1	1	1	91146.011	13215.283	9885.943	0.078	-0.018	-0.014	52428.688	4.175
183.900	4.001	---	---	291248.988	Equation 6.10.7.1.1-1	1	1	67500.977	9813.212	7340.959	0.015	-0.018	-0.013	39278.698	9.506
184.100	2.770	---	---	232634.188	Equation 6.10.7.1.1-1	1	1	67046.059	9729.498	7278.335	0.036	-0.031	-0.023	38983.162	16.328
184.250	3.086	---	---	232634.188	Equation 6.10.7.1.1-1	1	1	66704.001	9676.863	7238.961	0.012	-0.019	-0.015	38766.600	10.590
188.600	3.937	---	---	232634.188	Equation 6.10.7.1.1-1	1	1	56466.582	8201.969	6135.639	0.045	-0.013	-0.010	33063.645	8.636
197.125	7.320	---	---	232634.188	Equation 6.10.7.1.1-1	1	1	34919.940	5076.006	3797.202	0.089	-0.002	-0.001	21029.668	4.775
209.400	178.975	---	---	232634.188	Equation 6.10.7.1.1-1	1	1	393.340	60.727	45.428	0.152	0.017	0.013	279.659	0.922
209.500	999.990	---	---	232634.188	Equation 6.10.7.1.1-1	1	1	0.000	0.000	0.000	0.000	0.000	0.000	0.000	0.000
209.600	162.766	---	---	48.881	Equation 6.10.8.1.1-1 lateral torsion buckling	1	1	-0.009	-0.002	-0.001	0.117	0.013	0.010	-0.051	0.747

Date:	8/2/2021	Span3-5ft-WB.lbsx	
Time:	3:01 PM	Bentley LEAP Bridge Steel [AASHTO LRFD 8th Ed. with 2017 Interims]	v21.00.00.28

FLEXURE RATING

POI Loc. (ft)	Moment Rating Factor	Vehicle Tonnage (Tons)	Rating Tonnage (Tons)	Moment/Stress Resistance (kip-in / ksi)	Controlling Equation	φc	φs	DC1 (kip-in / ksi)	DC2 (kip-in / ksi)	DW (kip-ft / ksi)	flDC1 (ksi)	flDC2 (ksi)	flDW (ksi)	LL (kip-in / ksi)	flLL (ksi)
210.000	410.028	---	---	48.881	Equation 6.10.8.1.1-1 lateral torsion buckling	1	1	-0.001	0.000	0.000	0.012	0.002	0.001	-0.015	0.312

SHEAR RATING

POI Loc. (ft)	Shear Rating Factor	Vehicle Tonnage (Tons)	Rating Tonnage (Tons)	Shear Resistance (kip)	Controlling Equation	φc	φs	DC1 (kip)	DC2 (kip)	DW (kip)	LL (kip)
0.000	50.998	---	---	1685.625	Equation 6.10.9.1-1	1.000	1.000	-3.446	-0.154	-0.115	-32.980
0.400	16.670	---	---	1685.625	Equation 6.10.9.1-1	1.000	1.000	-4.900	-0.289	-0.216	101.443
0.500	8.176	---	---	1685.625	Equation 6.10.9.1-1	1.000	1.000	249.585	35.854	26.821	167.966
0.600	8.177	---	---	1685.625	Equation 6.10.9.1-1	1.000	1.000	249.552	35.848	26.817	167.966
11.500	3.120	---	---	761.178	Equation 6.10.9.1-1	1.000	1.000	223.909	32.097	24.011	154.199
21.400	3.742	---	---	761.178	Equation 6.10.9.1-1	1.000	1.000	201.295	28.696	21.466	136.202
23.000	3.776	---	---	761.178	Equation 6.10.9.1-1	1.000	1.000	198.008	28.144	21.054	136.118

SHEAR RATING

POI Loc. (ft)	Shear Rating Factor	Vehicle Tonnage (Tons)	Rating Tonnage (Tons)	Shear Resistance (kip)	Controlling Equation	φc	φs	DC1 (kip)	DC2 (kip)	DW (kip)	LL (kip)
25.900	6.557	---	---	1124.840	Equation 6.10.9.1-1	1.000	1.000	190.660	27.151	20.310	135.241
26.100	6.577	---	---	1124.840	Equation 6.10.9.1-1	1.000	1.000	189.873	27.085	20.261	134.950
34.500	3.833	---	---	678.990	Equation 6.10.9.1-1	1.000	1.000	170.313	24.200	18.103	121.686
41.900	4.290	---	---	678.990	Equation 6.10.9.1-1	1.000	1.000	153.513	21.659	16.203	113.655
42.000	6.281	---	---	904.929	Equation 6.10.9.1-1	1.000	1.000	153.307	21.625	16.177	113.647
42.100	6.298	---	---	904.929	Equation 6.10.9.1-1	1.000	1.000	152.648	21.594	16.154	113.458
42.300	6.324	---	---	904.929	Equation 6.10.9.1-1	1.000	1.000	152.206	21.525	16.102	113.080
46.000	5.165	---	---	747.024	Equation 6.10.9.1-1	1.000	1.000	144.205	20.255	15.152	109.868
57.500	6.131	---	---	747.024	Equation 6.10.9.1-1	1.000	1.000	115.389	16.312	12.202	98.368
63.200	6.881	---	---	747.024	Equation 6.10.9.1-1	1.000	1.000	101.390	14.356	10.740	90.178
69.000	7.236	---	---	747.024	Equation 6.10.9.1-1	1.000	1.000	88.301	12.372	9.255	88.042

SHEAR RATING

POI Loc. (ft)	Shear Rating Factor	Vehicle Tonnage (Tons)	Rating Tonnage (Tons)	Shear Resistance (kip)	Controlling Equation	φc	φs	DC1 (kip)	DC2 (kip)	DW (kip)	LL (kip)
80.500	8.453	---	---	747.024	Equation 6.10.9.1-1	1.000	1.000	59.575	8.415	6.295	79.588
84.100	9.003	---	---	747.024	Equation 6.10.9.1-1	1.000	1.000	50.684	7.181	5.372	75.953
92.000	9.599	---	---	742.922	Equation 6.10.9.1-1	1.000	1.000	32.656	4.479	3.351	73.180
103.625	11.331	---	---	742.922	Equation 6.10.9.1-1	1.000	1.000	3.652	0.472	0.353	65.170
105.000	11.850	---	---	742.922	Equation 6.10.9.1-1	1.000	1.000	-0.017	-0.027	-0.020	62.701
115.250	10.356	---	---	742.922	Equation 6.10.9.1-1	1.000	1.000	-26.241	-3.565	-2.667	-68.600
125.900	9.194	---	---	747.024	Equation 6.10.9.1-1	1.000	1.000	-50.577	-7.211	-5.395	-74.377
126.750	8.980	---	---	747.024	Equation 6.10.9.1-1	1.000	1.000	-52.926	-7.501	-5.611	-75.838
138.250	7.712	---	---	747.024	Equation 6.10.9.1-1	1.000	1.000	-81.877	-11.473	-8.583	-83.650
146.800	7.052	---	---	747.024	Equation 6.10.9.1-1	1.000	1.000	-101.249	-14.401	-10.773	-88.005
149.750	6.655	---	---	747.024	Equation 6.10.9.1-1	1.000	1.000	-108.706	-15.413	-11.530	-91.873

SHEAR RATING

POI Loc. (ft)	Shear Rating Factor	Vehicle Tonnage (Tons)	Rating Tonnage (Tons)	Shear Resistance (kip)	Controlling Equation	φc	φs	DC1 (kip)	DC2 (kip)	DW (kip)	LL (kip)
161.250	5.631	---	---	747.024	Equation 6.10.9.1-1	1.000	1.000	-137.700	-19.382	-14.499	-102.195
167.700	5.994	---	---	831.150	Equation 6.10.9.1-1	1.000	1.000	-152.199	-21.594	-16.154	-106.972
167.900	5.969	---	---	831.150	Equation 6.10.9.1-1	1.000	1.000	-152.641	-21.663	-16.205	-107.324
168.000	4.052	---	---	626.874	Equation 6.10.9.1-1	1.000	1.000	-153.311	-21.694	-16.229	-107.499
168.100	4.049	---	---	626.874	Equation 6.10.9.1-1	1.000	1.000	-153.517	-21.729	-16.255	-107.517
172.750	3.779	---	---	626.874	Equation 6.10.9.1-1	1.000	1.000	-164.068	-23.326	-17.450	-111.672
183.900	10.831	---	---	1557.297	Equation 6.10.9.1-1	1.000	1.000	-189.777	-27.155	-20.314	-121.882
184.100	10.816	---	---	1557.297	Equation 6.10.9.1-1	1.000	1.000	-190.475	-27.227	-20.368	-121.975
184.250	3.602	---	---	684.644	Equation 6.10.9.1-1	1.000	1.000	-191.970	-27.279	-20.406	-123.534
188.600	3.401	---	---	684.644	Equation 6.10.9.1-1	1.000	1.000	-201.354	-28.774	-21.525	-127.325
197.125	2.956	---	---	684.644	Equation 6.10.9.1-1	1.000	1.000	-220.662	-31.705	-23.718	-138.194

Date:	8/2/2021	Span3-5ft-WB.lbsx	
Time:	3:01 PM	Bentley LEAP Bridge Steel [AASHTO LRFD 8th Ed. with 2017 Interims]	v21.00.00.28

SHEAR RATING

POI Loc. (ft)	Shear Rating Factor	Vehicle Tonnage (Tons)	Rating Tonnage (Tons)	Shear Resistance (kip)	Controlling Equation	φc	φs	DC1 (kip)	DC2 (kip)	DW (kip)	LL (kip)
209.400	8.692	---	---	1685.625	Equation 6.10.9.1-1	1.000	1.000	-249.416	-35.930	-26.878	-158.009
209.500	8.692	---	---	1685.625	Equation 6.10.9.1-1	1.000	1.000	-249.450	-35.936	-26.883	-158.009
209.600	17.687	---	---	1685.625	Equation 6.10.9.1-1	1.000	1.000	4.901	0.295	0.220	-95.610
210.000	62.022	---	---	1685.625	Equation 6.10.9.1-1	1.000	1.000	3.447	0.149	0.111	27.118

SUMMARY REPORT

Load Rating Combination	Controlling POI Loc. (ft)	Based on	Controlling Equation	Rating Factor	Vehicle Tonnage (Tons)	Rating Tonnage (Tons)
Design Inventory	105.000	Flexure	Equation 6.10.7.1.1-1	1.659	---	---
Design Operating	105.000	Flexure	Equation 6.10.7.1.1-1	2.152	---	---
Permit	105.000	Flexure	Equation 6.10.7.1.1-1	2.023	59.995	121.366

Group01 Member 04

Design Inventory (Strength I) Permit

FLEXURE RATING

Date:	8/2/2021	Span3-5ft-WB.lbsx	
Time:	3:01 PM	Bentley LEAP Bridge Steel [AASHTO LRFD 8th Ed. with 2017 Interims]	v21.00.00.28

POI Loc. (ft)	Moment Rating Factor	Vehicle Tonnage (Tons)	Rating Tonnage (Tons)	Moment/Stress Resistance (kip-in / ksi)	Controlling Equation	φc	φs	DC1 (kip-in / ksi)	DC2 (kip-in / ksi)	DW (kip-ft / ksi)	flDC1 (ksi)	flDC2 (ksi)	flDW (ksi)	LL (kip-in / ksi)	flLL (ksi)
0.000	465.345	59.995	27918.358	48.881	Equation 6.10.8.1.1-1 lateral torsion buckling	1	1	0.000	0.001	0.001	-0.006	-0.002	-0.002	-0.007	0.293
0.400	14.486	59.995	869.081	48.881	Equation 6.10.8.1.1-1 lateral torsion buckling	1	1	-0.003	-0.001	0.000	-0.097	-0.019	-0.014	-3.089	0.846
0.500	999.990	59.995	59994.402	231116.686	Equation 6.10.7.1.1-1	1	1	0.000	0.000	0.000	0.000	0.000	0.000	0.000	0.000
0.600	9.239	59.995	554.313	48.881	Equation 6.10.8.1.1-1 lateral torsion buckling	1	1	0.174	0.012	0.009	-0.105	-0.022	-0.016	-4.996	0.932
11.500	6.708	59.995	402.472	231116.686	Equation 6.10.7.1.1-1	1	1	31265.619	4461.688	3337.650	-0.064	-0.006	-0.004	24498.590	4.102
21.400	3.111	59.995	186.647	231116.686	Equation 6.10.7.1.1-1	1	1	56593.794	8032.053	6008.529	-0.028	0.009	0.007	43469.920	8.745
23.000	2.831	59.995	169.816	231116.686	Equation 6.10.7.1.1-1	1	1	60450.610	8572.592	6412.890	-0.038	0.011	0.008	46315.314	9.477
25.900	2.330	59.995	139.767	231116.686	Equation 6.10.7.1.1-1	1	1	67236.154	9534.464	7132.436	0.015	0.014	0.010	51702.840	12.816
26.100	3.331	59.995	199.816	289532.167	Equation 6.10.7.1.1-1	1	1	67692.321	9572.968	7161.241	0.005	0.008	0.006	52093.763	7.321

Date:	8/2/2021	Span3-5ft-WB.lbsx	
Time:	3:01 PM	Bentley LEAP Bridge Steel [AASHTO LRFD 8th Ed. with 2017 Interims]	v21.00.00.28

FLEXURE RATING

POI Loc. (ft)	Moment Rating Factor	Vehicle Tonnage (Tons)	Rating Tonnage (Tons)	Moment/Stress Resistance (kip-in / ksi)	Controlling Equation	φc	φs	DC1 (kip-in / ksi)	DC2 (kip-in / ksi)	DW (kip-ft / ksi)	flDC1 (ksi)	flDC2 (ksi)	flDW (ksi)	LL (kip-in / ksi)	flLL (ksi)
34.500	2.618	59.995	157.089	289532.167	Equation 6.10.7.1.1-1	1	1	86036.120	12139.429	9081.130	0.077	-0.002	-0.001	66376.371	2.575
41.900	2.035	59.995	122.082	289532.167	Equation 6.10.7.1.1-1	1	1	100643.237	14171.398	10601.183	0.222	-0.018	-0.013	76904.448	3.021
42.000	3.293	59.995	197.554	384994.225	Equation 6.10.7.1.1-1	1	1	100833.305	14175.762	10604.448	0.064	-0.005	-0.004	77049.792	0.858
42.100	3.283	59.995	196.976	384994.225	Equation 6.10.7.1.1-1	1	1	101020.291	14196.870	10620.238	0.065	-0.005	-0.004	77181.709	0.874
42.300	3.264	59.995	195.817	384994.225	Equation 6.10.7.1.1-1	1	1	101393.173	14248.920	10659.174	0.066	-0.005	-0.004	77445.542	0.905
46.000	2.927	59.995	175.607	384994.225	Equation 6.10.7.1.1-1	1	1	108100.900	15173.129	11350.547	0.100	-0.008	-0.006	82399.518	1.577
57.500	2.300	59.995	138.004	384994.225	Equation 6.10.7.1.1-1	1	1	126177.810	17682.483	13227.718	0.067	-0.008	-0.006	96452.694	1.346
63.200	2.108	59.995	126.485	384994.225	Equation 6.10.7.1.1-1	1	1	133754.602	18727.442	14009.417	0.086	-0.009	-0.007	101134.481	1.284
69.000	1.923	59.995	115.350	384994.225	Equation 6.10.7.1.1-1	1	1	140519.526	19641.704	14693.350	0.153	-0.013	-0.010	106610.904	1.353
80.500	1.681	59.995	100.861	384994.225	Equation 6.10.7.1.1-1	1	1	150751.583	21060.934	15755.030	0.101	-0.011	-0.008	114641.730	1.444
84.100	1.626	59.995	97.544	384994.225	Equation 6.10.7.1.1-1	1	1	153187.809	21396.570	16006.109	0.112	-0.011	-0.008	116674.726	1.494

Date:	8/2/2021	Span3-5ft-WB.lbsx	
Time:	3:01 PM	Bentley LEAP Bridge Steel [AASHTO LRFD 8th Ed. with 2017 Interims]	v21.00.00.28

FLEXURE RATING

POI Loc. (ft)	Moment Rating Factor	Vehicle Tonnage (Tons)	Rating Tonnage (Tons)	Moment/Stress Resistance (kip-in / ksi)	Controlling Equation	φc	φs	DC1 (kip-in / ksi)	DC2 (kip-in / ksi)	DW (kip-ft / ksi)	flDC1 (ksi)	flDC2 (ksi)	flDW (ksi)	LL (kip-in / ksi)	flLL (ksi)
92.000	1.531	59.995	91.841	384994.225	Equation 6.10.7.1.1-1	1	1	157250.225	21938.197	16411.283	0.197	-0.016	-0.012	120317.724	1.721
103.625	1.489	59.995	89.317	384994.225	Equation 6.10.7.1.1-1	1	1	159619.334	22278.985	16666.217	0.122	-0.012	-0.009	122002.848	1.671
105.000	1.489	59.995	89.303	384994.225	Equation 6.10.7.1.1-1	1	1	159646.460	22282.730	16669.018	0.124	-0.012	-0.009	121981.924	1.680
115.250	1.507	59.995	90.385	384994.225	Equation 6.10.7.1.1-1	1	1	158198.808	22068.366	16508.660	0.187	-0.015	-0.011	121803.912	1.579
125.900	1.621	59.995	97.239	384994.225	Equation 6.10.7.1.1-1	1	1	153178.510	21395.395	16005.231	0.108	-0.011	-0.008	116940.713	1.558
126.750	1.629	59.995	97.738	384994.225	Equation 6.10.7.1.1-1	1	1	152640.993	21320.407	15949.135	0.106	-0.010	-0.008	116744.652	1.555
138.250	1.819	59.995	109.129	384994.225	Equation 6.10.7.1.1-1	1	1	143349.776	20030.344	14984.080	0.140	-0.011	-0.009	110820.312	1.407
146.800	2.050	59.995	122.965	384994.225	Equation 6.10.7.1.1-1	1	1	133738.670	18726.058	14008.383	0.082	-0.008	-0.006	104552.653	1.051
149.750	2.148	59.995	128.888	384994.225	Equation 6.10.7.1.1-1	1	1	129944.484	18202.305	13616.578	0.076	-0.007	-0.006	102105.036	0.915
161.250	2.669	59.995	160.147	384994.225	Equation 6.10.7.1.1-1	1	1	112804.692	15825.902	11838.866	0.114	-0.009	-0.007	89864.802	0.858
167.700	3.136	59.995	188.128	384994.225	Equation 6.10.7.1.1-1	1	1	101378.205	14254.042	10663.006	0.062	-0.006	-0.004	80500.385	1.001

Date:	8/2/2021	Span3-5ft-WB.lbsx	
Time:	3:01 PM	Bentley LEAP Bridge Steel [AASHTO LRFD 8th Ed. with 2017 Interims]	v21.00.00.28

FLEXURE RATING

POI Loc. (ft)	Moment Rating Factor	Vehicle Tonnage (Tons)	Rating Tonnage (Tons)	Moment/Stress Resistance (kip-in / ksi)	Controlling Equation	φc	φs	DC1 (kip-in / ksi)	DC2 (kip-in / ksi)	DW (kip-ft / ksi)	flDC1 (ksi)	flDC2 (ksi)	flDW (ksi)	LL (kip-in / ksi)	flLL (ksi)
167.900	3.152	59.995	189.091	384994.225	Equation 6.10.7.1.1-1	1	1	101005.459	14202.034	10624.102	0.061	-0.006	-0.004	80190.862	1.019
168.000	1.942	59.995	116.504	289532.167	Equation 6.10.7.1.1-1	1	1	100818.698	14181.457	10608.708	0.208	-0.019	-0.014	80036.100	3.550
168.100	1.948	59.995	116.859	289532.167	Equation 6.10.7.1.1-1	1	1	100628.821	14177.100	10605.448	0.202	-0.019	-0.014	79861.910	3.567
172.750	2.236	59.995	134.127	289532.167	Equation 6.10.7.1.1-1	1	1	91628.964	12927.354	9670.552	0.121	-0.013	-0.010	72884.671	4.457
183.900	3.088	59.995	185.278	289532.167	Equation 6.10.7.1.1-1	1	1	67714.908	9583.089	7168.812	0.060	-0.012	-0.009	54436.479	9.227
184.100	2.151	59.995	129.055	231116.686	Equation 6.10.7.1.1-1	1	1	67256.322	9544.225	7139.739	0.111	-0.022	-0.016	54173.610	15.880
184.250	2.345	59.995	140.716	231116.686	Equation 6.10.7.1.1-1	1	1	66912.732	9498.752	7105.722	0.058	-0.013	-0.010	53884.926	10.078
188.600	2.972	59.995	178.307	231116.686	Equation 6.10.7.1.1-1	1	1	56586.820	8052.270	6023.654	0.042	-0.014	-0.010	46404.569	8.171
197.125	5.576	59.995	334.555	231116.686	Equation 6.10.7.1.1-1	1	1	34934.324	5001.574	3741.522	-0.028	-0.017	-0.012	29224.710	4.409
209.400	131.451	59.995	7886.376	231116.686	Equation 6.10.7.1.1-1	1	1	410.341	60.205	45.038	-0.140	-0.024	-0.018	361.720	1.267
209.500	999.990	59.995	59994.402	231116.686	Equation 6.10.7.1.1-1	1	1	0.000	0.000	0.000	0.000	0.000	0.000	0.000	0.000

Date:	8/2/2021	Span3-5ft-WB.lbsx	
Time:	3:01 PM	Bentley LEAP Bridge Steel [AASHTO LRFD 8th Ed. with 2017 Interims]	v21.00.00.28

FLEXURE RATING

POI Loc. (ft)	Moment Rating Factor	Vehicle Tonnage (Tons)	Rating Tonnage (Tons)	Moment/Stress Resistance (kip-in / ksi)	Controlling Equation	φc	φs	DC1 (kip-in / ksi)	DC2 (kip-in / ksi)	DW (kip-ft / ksi)	flDC1 (ksi)	flDC2 (ksi)	flDW (ksi)	LL (kip-in / ksi)	flLL (ksi)
209.600	99.685	59.995	5980.584	48.881	Equation 6.10.8.1.1-1 lateral torsion buckling	1	1	-0.003	0.001	0.001	-0.111	-0.020	-0.015	-0.156	1.001
210.000	425.709	59.995	25540.400	48.881	Equation 6.10.8.1.1-1 lateral torsion buckling	1	1	0.000	0.000	0.000	-0.009	-0.001	-0.001	-0.004	0.332

SHEAR RATING

POI Loc. (ft)	Shear Rating Factor	Vehicle Tonnage (Tons)	Rating Tonnage (Tons)	Shear Resistance (kip)	Controlling Equation	φc	φs	DC1 (kip)	DC2 (kip)	DW (kip)	LL (kip)
0.000	27.745	59.995	1664.558	1685.625	Equation 6.10.9.1-1	1.000	1.000	-0.526	0.125	0.094	-60.743
0.400	11.678	59.995	700.594	1685.625	Equation 6.10.9.1-1	1.000	1.000	-1.793	-0.016	-0.012	144.504
0.500	5.798	59.995	347.823	1685.625	Equation 6.10.9.1-1	1.000	1.000	248.868	36.129	27.027	236.929
0.600	5.798	59.995	347.833	1685.625	Equation 6.10.9.1-1	1.000	1.000	248.836	36.123	27.022	236.929
11.500	2.203	59.995	132.190	761.178	Equation 6.10.9.1-1	1.000	1.000	224.297	32.360	24.208	217.992

SHEAR RATING

POI Loc. (ft)	Shear Rating Factor	Vehicle Tonnage (Tons)	Rating Tonnage (Tons)	Shear Resistance (kip)	Controlling Equation	φc	φs	DC1 (kip)	DC2 (kip)	DW (kip)	LL (kip)
21.400	2.572	59.995	154.322	761.178	Equation 6.10.9.1-1	1.000	1.000	202.685	28.937	21.647	197.457
23.000	2.598	59.995	155.885	761.178	Equation 6.10.9.1-1	1.000	1.000	199.417	28.386	21.235	197.107
25.900	4.591	59.995	275.463	1124.840	Equation 6.10.9.1-1	1.000	1.000	192.243	27.388	20.488	192.689
26.100	4.596	59.995	275.741	1124.840	Equation 6.10.9.1-1	1.000	1.000	191.476	27.317	20.435	192.689
34.500	2.571	59.995	154.248	678.990	Equation 6.10.9.1-1	1.000	1.000	172.767	24.411	18.261	180.299
41.900	2.854	59.995	171.237	678.990	Equation 6.10.9.1-1	1.000	1.000	156.716	21.850	16.345	169.603
42.000	4.188	59.995	251.250	904.929	Equation 6.10.9.1-1	1.000	1.000	156.521	21.816	16.320	169.603
42.100	4.198	59.995	251.878	904.929	Equation 6.10.9.1-1	1.000	1.000	155.872	21.777	16.291	169.351
42.300	4.214	59.995	252.824	904.929	Equation 6.10.9.1-1	1.000	1.000	155.451	21.708	16.239	168.846
46.000	3.430	59.995	205.769	747.024	Equation 6.10.9.1-1	1.000	1.000	146.936	20.428	15.281	164.553
57.500	3.945	59.995	236.696	747.024	Equation 6.10.9.1-1	1.000	1.000	117.926	16.450	12.306	152.168

SHEAR RATING

POI Loc. (ft)	Shear Rating Factor	Vehicle Tonnage (Tons)	Rating Tonnage (Tons)	Shear Resistance (kip)	Controlling Equation	φc	φs	DC1 (kip)	DC2 (kip)	DW (kip)	LL (kip)
63.200	4.309	59.995	258.523	747.024	Equation 6.10.9.1-1	1.000	1.000	104.505	14.476	10.829	143.236
69.000	4.572	59.995	274.294	747.024	Equation 6.10.9.1-1	1.000	1.000	90.645	12.462	9.322	138.802
80.500	5.127	59.995	307.600	747.024	Equation 6.10.9.1-1	1.000	1.000	61.074	8.494	6.354	130.893
84.100	5.408	59.995	324.452	747.024	Equation 6.10.9.1-1	1.000	1.000	52.547	7.246	5.421	126.075
92.000	5.903	59.995	354.160	742.922	Equation 6.10.9.1-1	1.000	1.000	33.793	4.502	3.368	118.794
103.625	6.823	59.995	409.337	742.922	Equation 6.10.9.1-1	1.000	1.000	3.745	0.496	0.371	108.211
105.000	7.108	59.995	426.431	742.922	Equation 6.10.9.1-1	1.000	1.000	0.372	0.019	0.014	104.466
115.250	6.738	59.995	404.263	742.922	Equation 6.10.9.1-1	1.000	1.000	-27.190	-3.539	-2.648	-105.301
125.900	5.941	59.995	356.459	747.024	Equation 6.10.9.1-1	1.000	1.000	-51.980	-7.234	-5.412	-114.853
126.750	5.830	59.995	349.782	747.024	Equation 6.10.9.1-1	1.000	1.000	-54.243	-7.530	-5.633	-116.569
138.250	5.116	59.995	306.961	747.024	Equation 6.10.9.1-1	1.000	1.000	-84.075	-11.488	-8.594	-125.647

SHEAR RATING

POI Loc. (ft)	Shear Rating Factor	Vehicle Tonnage (Tons)	Rating Tonnage (Tons)	Shear Resistance (kip)	Controlling Equation	φc	φs	DC1 (kip)	DC2 (kip)	DW (kip)	LL (kip)
146.800	4.617	59.995	276.978	747.024	Equation 6.10.9.1-1	1.000	1.000	-103.970	-14.453	-10.812	-133.817
149.750	4.380	59.995	262.783	747.024	Equation 6.10.9.1-1	1.000	1.000	-111.129	-15.475	-11.576	-139.003
161.250	3.708	59.995	222.439	747.024	Equation 6.10.9.1-1	1.000	1.000	-140.450	-19.429	-14.534	-154.441
167.700	3.899	59.995	233.937	831.150	Equation 6.10.9.1-1	1.000	1.000	-155.281	-21.663	-16.206	-163.620
167.900	3.883	59.995	232.979	831.150	Equation 6.10.9.1-1	1.000	1.000	-155.702	-21.732	-16.257	-164.154
168.000	2.630	59.995	157.798	626.874	Equation 6.10.9.1-1	1.000	1.000	-156.362	-21.770	-16.285	-164.421
168.100	2.629	59.995	157.705	626.874	Equation 6.10.9.1-1	1.000	1.000	-156.557	-21.804	-16.311	-164.421
172.750	2.516	59.995	150.951	626.874	Equation 6.10.9.1-1	1.000	1.000	-166.638	-23.412	-17.514	-166.653
183.900	7.162	59.995	429.675	1557.297	Equation 6.10.9.1-1	1.000	1.000	-191.218	-27.270	-20.400	-184.088
184.100	7.145	59.995	428.641	1557.297	Equation 6.10.9.1-1	1.000	1.000	-191.896	-27.336	-20.449	-184.421
184.250	2.406	59.995	144.370	684.644	Equation 6.10.9.1-1	1.000	1.000	-193.646	-27.384	-20.485	-184.149

Date:	8/2/2021	Span3-5ft-WB.lbsx	
Time:	3:01 PM	Bentley LEAP Bridge Steel [AASHTO LRFD 8th Ed. with 2017 Interims]	v21.00.00.28

SHEAR RATING

POI Loc. (ft)	Shear Rating Factor	Vehicle Tonnage (Tons)	Rating Tonnage (Tons)	Shear Resistance (kip)	Controlling Equation	φc	φs	DC1 (kip)	DC2 (kip)	DW (kip)	LL (kip)
188.600	2.292	59.995	137.524	684.644	Equation 6.10.9.1-1	1.000	1.000	-202.811	-28.890	-21.612	-188.168
197.125	2.032	59.995	121.927	684.644	Equation 6.10.9.1-1	1.000	1.000	-221.256	-31.833	-23.813	-200.632
209.400	6.227	59.995	373.615	1685.625	Equation 6.10.9.1-1	1.000	1.000	-248.768	-36.071	-26.983	-220.605
209.500	6.227	59.995	373.604	1685.625	Equation 6.10.9.1-1	1.000	1.000	-248.799	-36.077	-26.988	-220.605
209.600	12.574	59.995	754.385	1685.625	Equation 6.10.9.1-1	1.000	1.000	1.772	-0.019	-0.014	-134.193
210.000	22.847	59.995	1370.679	1685.625	Equation 6.10.9.1-1	1.000	1.000	0.505	-0.120	-0.090	73.767

Design Inventory (Strength I) Design Inventory

FLEXURE RATING

POI Loc. (ft)	Moment Rating Factor	Vehicle Tonnage (Tons)	Rating Tonnage (Tons)	Moment/Stress Resistance (kip-in / ksi)	Controlling Equation	φc	φs	DC1 (kip-in / ksi)	DC2 (kip-in / ksi)	DW (kip-ft / ksi)	flDC1 (ksi)	flDC2 (ksi)	flDW (ksi)	LL (kip-in / ksi)	flLL (ksi)
0.000	351.901	---	---	48.881	Equation 6.10.8.1.1-1 lateral torsion buckling	1	1	0.000	0.001	0.001	-0.006	-0.002	-0.002	-0.008	0.394

Date:	8/2/2021	Span3-5ft-WB.lbsx	
Time:	3:01 PM	Bentley LEAP Bridge Steel [AASHTO LRFD 8th Ed. with 2017 Interims]	v21.00.00.28

FLEXURE RATING

POI Loc. (ft)	Moment Rating Factor	Vehicle Tonnage (Tons)	Rating Tonnage (Tons)	Moment/Stress Resistance (kip-in / ksi)	Controlling Equation	φc	φs	DC1 (kip-in / ksi)	DC2 (kip-in / ksi)	DW (kip-ft / ksi)	flDC1 (ksi)	flDC2 (ksi)	flDW (ksi)	LL (kip-in / ksi)	flLL (ksi)
0.400	10.766	---	---	48.881	Equation 6.10.8.1.1-1 lateral torsion buckling	1	1	-0.003	-0.001	0.000	-0.097	-0.019	-0.014	-4.157	1.138
0.500	999.990	---	---	231116.686	Equation 6.10.7.1.1-1	1	1	0.000	0.000	0.000	0.000	0.000	0.000	0.000	0.000
0.600	6.839	---	---	48.881	Equation 6.10.8.1.1-1 lateral torsion buckling	1	1	0.174	0.012	0.009	-0.106	-0.022	-0.016	-6.754	1.245
11.500	5.896	---	---	231116.686	Equation 6.10.7.1.1-1	1	1	31265.619	4461.688	3337.650	-0.064	-0.006	-0.004	27125.238	5.411
21.400	2.576	---	---	231116.686	Equation 6.10.7.1.1-1	1	1	56593.794	8032.053	6008.529	-0.028	0.009	0.007	51532.967	11.594
23.000	2.332	---	---	231116.686	Equation 6.10.7.1.1-1	1	1	60450.610	8572.592	6412.890	-0.038	0.011	0.008	55232.730	12.564
25.900	1.899	---	---	231116.686	Equation 6.10.7.1.1-1	1	1	67236.154	9534.464	7132.436	0.015	0.014	0.011	62184.052	17.131
26.100	2.721	---	---	289532.167	Equation 6.10.7.1.1-1	1	1	67692.321	9572.968	7161.241	0.005	0.008	0.006	62674.658	9.798
34.500	2.158	---	---	289532.167	Equation 6.10.7.1.1-1	1	1	86036.120	12139.429	9081.130	0.078	-0.002	-0.001	80491.399	3.172
41.900	1.663	---	---	289532.167	Equation 6.10.7.1.1-1	1	1	100643.237	14171.398	10601.183	0.226	-0.018	-0.013	94128.353	3.651

Date:	8/2/2021	Span3-5ft-WB.lbsx	
Time:	3:01 PM	Bentley LEAP Bridge Steel [AASHTO LRFD 8th Ed. with 2017 Interims]	v21.00.00.28

FLEXURE RATING

POI Loc. (ft)	Moment Rating Factor	Vehicle Tonnage (Tons)	Rating Tonnage (Tons)	Moment/Stress Resistance (kip-in / ksi)	Controlling Equation	φc	φs	DC1 (kip-in / ksi)	DC2 (kip-in / ksi)	DW (kip-ft / ksi)	flDC1 (ksi)	flDC2 (ksi)	flDW (ksi)	LL (kip-in / ksi)	flLL (ksi)
42.000	2.691	---	---	384994.225	Equation 6.10.7.1.1-1	1	1	100833.305	14175.762	10604.448	0.064	-0.005	-0.004	94319.610	1.027
42.100	2.683	---	---	384994.225	Equation 6.10.7.1.1-1	1	1	101020.291	14196.870	10620.238	0.065	-0.005	-0.004	94488.513	1.051
42.300	2.666	---	---	384994.225	Equation 6.10.7.1.1-1	1	1	101393.173	14248.920	10659.174	0.066	-0.005	-0.004	94826.319	1.100
46.000	2.378	---	---	384994.225	Equation 6.10.7.1.1-1	1	1	108100.900	15173.129	11350.547	0.101	-0.008	-0.006	101104.500	2.111
57.500	1.866	---	---	384994.225	Equation 6.10.7.1.1-1	1	1	126177.810	17682.483	13227.718	0.068	-0.008	-0.006	118837.320	1.690
63.200	1.702	---	---	384994.225	Equation 6.10.7.1.1-1	1	1	133754.602	18727.442	14009.417	0.087	-0.009	-0.007	125295.258	1.560
69.000	1.551	---	---	384994.225	Equation 6.10.7.1.1-1	1	1	140519.526	19641.704	14693.350	0.156	-0.013	-0.010	132074.250	1.697
80.500	1.356	---	---	384994.225	Equation 6.10.7.1.1-1	1	1	150751.583	21060.934	15755.030	0.103	-0.011	-0.008	142206.330	1.766
84.100	1.312	---	---	384994.225	Equation 6.10.7.1.1-1	1	1	153187.809	21396.570	16006.109	0.114	-0.011	-0.008	144704.684	1.813
92.000	1.234	---	---	384994.225	Equation 6.10.7.1.1-1	1	1	157250.225	21938.197	16411.283	0.201	-0.016	-0.012	149106.300	2.233
103.625	1.199	---	---	384994.225	Equation 6.10.7.1.1-1	1	1	159619.334	22278.985	16666.217	0.125	-0.012	-0.009	151497.990	2.079

Date:	8/2/2021	Span3-5ft-WB.lbsx	
Time:	3:01 PM	Bentley LEAP Bridge Steel [AASHTO LRFD 8th Ed. with 2017 Interims]	v21.00.00.28

FLEXURE RATING

POI Loc. (ft)	Moment Rating Factor	Vehicle Tonnage (Tons)	Rating Tonnage (Tons)	Moment/Stress Resistance (kip-in / ksi)	Controlling Equation	φc	φs	DC1 (kip-in / ksi)	DC2 (kip-in / ksi)	DW (kip-ft / ksi)	flDC1 (ksi)	flDC2 (ksi)	flDW (ksi)	LL (kip-in / ksi)	flLL (ksi)
105.000	1.199	---	---	384994.225	Equation 6.10.7.1.1-1	1	1	159646.460	22282.730	16669.018	0.126	-0.012	-0.009	151485.024	2.082
115.250	1.214	---	---	384994.225	Equation 6.10.7.1.1-1	1	1	158198.808	22068.366	16508.660	0.190	-0.015	-0.011	150967.740	2.079
125.900	1.302	---	---	384994.225	Equation 6.10.7.1.1-1	1	1	153178.510	21395.395	16005.231	0.110	-0.011	-0.008	145583.051	1.947
126.750	1.309	---	---	384994.225	Equation 6.10.7.1.1-1	1	1	152640.993	21320.407	15949.135	0.108	-0.011	-0.008	145257.840	1.948
138.250	1.465	---	---	384994.225	Equation 6.10.7.1.1-1	1	1	143349.776	20030.344	14984.080	0.142	-0.012	-0.009	137461.590	1.832
146.800	1.659	---	---	384994.225	Equation 6.10.7.1.1-1	1	1	133738.670	18726.058	14008.383	0.083	-0.008	-0.006	129352.526	1.209
149.750	1.741	---	---	384994.225	Equation 6.10.7.1.1-1	1	1	129944.484	18202.305	13616.578	0.077	-0.008	-0.006	126162.960	1.025
161.250	2.170	---	---	384994.225	Equation 6.10.7.1.1-1	1	1	112804.692	15825.902	11838.866	0.115	-0.009	-0.007	110679.450	0.988
167.700	2.543	---	---	384994.225	Equation 6.10.7.1.1-1	1	1	101378.205	14254.042	10663.006	0.063	-0.006	-0.004	99290.291	1.219
167.900	2.556	---	---	384994.225	Equation 6.10.7.1.1-1	1	1	101005.459	14202.034	10624.102	0.062	-0.006	-0.004	98916.784	1.249
168.000	1.573	---	---	289532.167	Equation 6.10.7.1.1-1	1	1	100818.698	14181.457	10608.708	0.213	-0.020	-0.015	98730.030	4.419

Date:	8/2/2021	Span3-5ft-WB.lbsx	
Time:	3:01 PM	Bentley LEAP Bridge Steel [AASHTO LRFD 8th Ed. with 2017 Interims]	v21.00.00.28

FLEXURE RATING

POI Loc. (ft)	Moment Rating Factor	Vehicle Tonnage (Tons)	Rating Tonnage (Tons)	Moment/Stress Resistance (kip-in / ksi)	Controlling Equation	φc	φs	DC1 (kip-in / ksi)	DC2 (kip-in / ksi)	DW (kip-ft / ksi)	flDC1 (ksi)	flDC2 (ksi)	flDW (ksi)	LL (kip-in / ksi)	flLL (ksi)
168.100	1.578	---	---	289532.167	Equation 6.10.7.1.1-1	1	1	100628.821	14177.100	10605.448	0.207	-0.019	-0.014	98526.131	4.453
172.750	1.803	---	---	289532.167	Equation 6.10.7.1.1-1	1	1	91628.964	12927.354	9670.552	0.124	-0.013	-0.010	89841.308	5.951
183.900	2.465	---	---	289532.167	Equation 6.10.7.1.1-1	1	1	67714.908	9583.089	7168.812	0.061	-0.013	-0.009	66754.485	12.666
184.100	1.713	---	---	231116.686	Equation 6.10.7.1.1-1	1	1	67256.322	9544.225	7139.739	0.113	-0.022	-0.016	66421.782	21.747
184.250	1.884	---	---	231116.686	Equation 6.10.7.1.1-1	1	1	66912.732	9498.752	7105.722	0.058	-0.014	-0.010	66082.380	13.645
188.600	2.400	---	---	231116.686	Equation 6.10.7.1.1-1	1	1	56586.820	8052.270	6023.654	0.042	-0.014	-0.010	56579.872	11.068
197.125	4.526	---	---	231116.686	Equation 6.10.7.1.1-1	1	1	34934.324	5001.574	3741.522	-0.028	-0.017	-0.012	35474.410	5.971
209.400	100.052	---	---	231116.686	Equation 6.10.7.1.1-1	1	1	410.341	60.205	45.038	-0.141	-0.025	-0.018	428.133	1.708
209.500	999.990	---	---	231116.686	Equation 6.10.7.1.1-1	1	1	0.000	0.000	0.000	0.000	0.000	0.000	0.000	0.000
209.600	84.967	---	---	48.881	Equation 6.10.8.1.1-1 lateral torsion buckling	1	1	-0.003	0.001	0.001	-0.111	-0.020	-0.015	-0.123	1.355

Date:	8/2/2021	Span3-5ft-WB.lbsx	
Time:	3:01 PM	Bentley LEAP Bridge Steel [AASHTO LRFD 8th Ed. with 2017 Interims]	v21.00.00.28

FLEXURE RATING

POI Loc. (ft)	Moment Rating Factor	Vehicle Tonnage (Tons)	Rating Tonnage (Tons)	Moment/Stress Resistance (kip-in / ksi)	Controlling Equation	φc	φs	DC1 (kip-in / ksi)	DC2 (kip-in / ksi)	DW (kip-ft / ksi)	flDC1 (ksi)	flDC2 (ksi)	flDW (ksi)	LL (kip-in / ksi)	flLL (ksi)
210.000	320.188	---	---	48.881	Equation 6.10.8.1.1-1 lateral torsion buckling	1	1	0.000	0.000	0.000	-0.009	-0.001	-0.001	-0.004	0.447

SHEAR RATING

POI Loc. (ft)	Shear Rating Factor	Vehicle Tonnage (Tons)	Rating Tonnage (Tons)	Shear Resistance (kip)	Controlling Equation	φc	φs	DC1 (kip)	DC2 (kip)	DW (kip)	LL (kip)
0.000	33.686	---	---	1685.625	Equation 6.10.9.1-1	1.000	1.000	-0.526	0.125	0.094	-50.031
0.400	9.771	---	---	1685.625	Equation 6.10.9.1-1	1.000	1.000	-1.793	-0.016	-0.012	172.691
0.500	4.849	---	---	1685.625	Equation 6.10.9.1-1	1.000	1.000	248.868	36.129	27.027	283.248
0.600	4.850	---	---	1685.625	Equation 6.10.9.1-1	1.000	1.000	248.836	36.123	27.022	283.248
11.500	1.865	---	---	761.178	Equation 6.10.9.1-1	1.000	1.000	224.297	32.360	24.208	257.546
21.400	2.174	---	---	761.178	Equation 6.10.9.1-1	1.000	1.000	202.685	28.937	21.647	233.581
23.000	2.204	---	---	761.178	Equation 6.10.9.1-1	1.000	1.000	199.417	28.386	21.235	232.370

SHEAR RATING

POI Loc. (ft)	Shear Rating Factor	Vehicle Tonnage (Tons)	Rating Tonnage (Tons)	Shear Resistance (kip)	Controlling Equation	φc	φs	DC1 (kip)	DC2 (kip)	DW (kip)	LL (kip)
25.900	3.956	---	---	1124.840	Equation 6.10.9.1-1	1.000	1.000	192.243	27.388	20.488	223.615
26.100	3.963	---	---	1124.840	Equation 6.10.9.1-1	1.000	1.000	191.476	27.317	20.435	223.443
34.500	2.224	---	---	678.990	Equation 6.10.9.1-1	1.000	1.000	172.767	24.411	18.261	208.425
41.900	2.469	---	---	678.990	Equation 6.10.9.1-1	1.000	1.000	156.716	21.850	16.345	196.089
42.000	3.622	---	---	904.929	Equation 6.10.9.1-1	1.000	1.000	156.521	21.816	16.320	196.089
42.100	3.632	---	---	904.929	Equation 6.10.9.1-1	1.000	1.000	155.872	21.777	16.291	195.778
42.300	3.646	---	---	904.929	Equation 6.10.9.1-1	1.000	1.000	155.451	21.708	16.239	195.156
46.000	2.972	---	---	747.024	Equation 6.10.9.1-1	1.000	1.000	146.936	20.428	15.281	189.868
57.500	3.519	---	---	747.024	Equation 6.10.9.1-1	1.000	1.000	117.926	16.450	12.306	170.584
63.200	3.852	---	---	747.024	Equation 6.10.9.1-1	1.000	1.000	104.505	14.476	10.829	160.244
69.000	4.148	---	---	747.024	Equation 6.10.9.1-1	1.000	1.000	90.645	12.462	9.322	152.991

SHEAR RATING

POI Loc. (ft)	Shear Rating Factor	Vehicle Tonnage (Tons)	Rating Tonnage (Tons)	Shear Resistance (kip)	Controlling Equation	φc	φs	DC1 (kip)	DC2 (kip)	DW (kip)	LL (kip)
80.500	4.843	---	---	747.024	Equation 6.10.9.1-1	1.000	1.000	61.074	8.494	6.354	138.584
84.100	5.137	---	---	747.024	Equation 6.10.9.1-1	1.000	1.000	52.547	7.246	5.421	132.723
92.000	5.660	---	---	742.922	Equation 6.10.9.1-1	1.000	1.000	33.793	4.502	3.368	123.890
103.625	6.698	---	---	742.922	Equation 6.10.9.1-1	1.000	1.000	3.745	0.496	0.371	110.234
105.000	6.951	---	---	742.922	Equation 6.10.9.1-1	1.000	1.000	0.372	0.019	0.014	106.817
115.250	6.506	---	---	742.922	Equation 6.10.9.1-1	1.000	1.000	-27.190	-3.539	-2.648	-109.058
125.900	5.670	---	---	747.024	Equation 6.10.9.1-1	1.000	1.000	-51.980	-7.234	-5.412	-120.357
126.750	5.565	---	---	747.024	Equation 6.10.9.1-1	1.000	1.000	-54.243	-7.530	-5.633	-122.125
138.250	4.668	---	---	747.024	Equation 6.10.9.1-1	1.000	1.000	-84.075	-11.488	-8.594	-137.717
146.800	4.109	---	---	747.024	Equation 6.10.9.1-1	1.000	1.000	-103.970	-14.453	-10.812	-150.362
149.750	3.885	---	---	747.024	Equation 6.10.9.1-1	1.000	1.000	-111.129	-15.475	-11.576	-156.733

SHEAR RATING

POI Loc. (ft)	Shear Rating Factor	Vehicle Tonnage (Tons)	Rating Tonnage (Tons)	Shear Resistance (kip)	Controlling Equation	φc	φs	DC1 (kip)	DC2 (kip)	DW (kip)	LL (kip)
161.250	3.210	---	---	747.024	Equation 6.10.9.1-1	1.000	1.000	-140.450	-19.429	-14.534	-178.388
167.700	3.360	---	---	831.150	Equation 6.10.9.1-1	1.000	1.000	-155.281	-21.663	-16.206	-189.901
167.900	3.344	---	---	831.150	Equation 6.10.9.1-1	1.000	1.000	-155.702	-21.732	-16.257	-190.605
168.000	2.265	---	---	626.874	Equation 6.10.9.1-1	1.000	1.000	-156.362	-21.770	-16.285	-190.957
168.100	2.263	---	---	626.874	Equation 6.10.9.1-1	1.000	1.000	-156.557	-21.804	-16.311	-190.957
172.750	2.147	---	---	626.874	Equation 6.10.9.1-1	1.000	1.000	-166.638	-23.412	-17.514	-195.288
183.900	6.089	---	---	1557.297	Equation 6.10.9.1-1	1.000	1.000	-191.218	-27.270	-20.400	-216.531
184.100	6.076	---	---	1557.297	Equation 6.10.9.1-1	1.000	1.000	-191.896	-27.336	-20.449	-216.858
184.250	2.045	---	---	684.644	Equation 6.10.9.1-1	1.000	1.000	-193.646	-27.384	-20.485	-216.645
188.600	1.944	---	---	684.644	Equation 6.10.9.1-1	1.000	1.000	-202.811	-28.890	-21.612	-221.889
197.125	1.711	---	---	684.644	Equation 6.10.9.1-1	1.000	1.000	-221.256	-31.833	-23.813	-238.288

Date:	8/2/2021	Span3-5ft-WB.lbsx	
Time:	3:01 PM	Bentley LEAP Bridge Steel [AASHTO LRFD 8th Ed. with 2017 Interims]	v21.00.00.28

SHEAR RATING

POI Loc. (ft)	Shear Rating Factor	Vehicle Tonnage (Tons)	Rating Tonnage (Tons)	Shear Resistance (kip)	Controlling Equation	φc	φs	DC1 (kip)	DC2 (kip)	DW (kip)	LL (kip)
209.400	5.210	---	---	1685.625	Equation 6.10.9.1-1	1.000	1.000	-248.768	-36.071	-26.983	-263.709
209.500	5.209	---	---	1685.625	Equation 6.10.9.1-1	1.000	1.000	-248.799	-36.077	-26.988	-263.709
209.600	10.536	---	---	1685.625	Equation 6.10.9.1-1	1.000	1.000	1.772	-0.019	-0.014	-160.148
210.000	28.976	---	---	1685.625	Equation 6.10.9.1-1	1.000	1.000	0.505	-0.120	-0.090	58.163

Design Operating (Strength I) **Design Operating**

FLEXURE RATING

POI Loc. (ft)	Moment Rating Factor	Vehicle Tonnage (Tons)	Rating Tonnage (Tons)	Moment/Stress Resistance (kip-in / ksi)	Controlling Equation	φc	φs	DC1 (kip-in / ksi)	DC2 (kip-in / ksi)	DW (kip-ft / ksi)	flDC1 (ksi)	flDC2 (ksi)	flDW (ksi)	LL (kip-in / ksi)	flLL (ksi)
0.000	458.239	---	---	48.881	Equation 6.10.8.1.1-1 lateral torsion buckling	1	1	0.000	0.001	0.001	-0.006	-0.002	-0.002	-0.006	0.302
0.400	13.962	---	---	48.881	Equation 6.10.8.1.1-1 lateral torsion buckling	1	1	-0.003	-0.001	0.000	-0.097	-0.019	-0.014	-3.207	0.873

Date:	8/2/2021	Span3-5ft-WB.lbsx	
Time:	3:01 PM	Bentley LEAP Bridge Steel [AASHTO LRFD 8th Ed. with 2017 Interims]	v21.00.00.28

FLEXURE RATING

POI Loc. (ft)	Moment Rating Factor	Vehicle Tonnage (Tons)	Rating Tonnage (Tons)	Moment/Stress Resistance (kip-in / ksi)	Controlling Equation	φc	φs	DC1 (kip-in / ksi)	DC2 (kip-in / ksi)	DW (kip-ft / ksi)	flDC1 (ksi)	flDC2 (ksi)	flDW (ksi)	LL (kip-in / ksi)	flLL (ksi)
0.500	999.990	---	---	231116.686	Equation 6.10.7.1.1-1	1	1	0.000	0.000	0.000	0.000	0.000	0.000	0.000	0.000
0.600	8.868	---	---	48.881	Equation 6.10.8.1.1-1 lateral torsion buckling	1	1	0.174	0.012	0.009	-0.105	-0.022	-0.016	-5.210	0.956
11.500	7.647	---	---	231116.686	Equation 6.10.7.1.1-1	1	1	31265.619	4461.688	3337.650	-0.063	-0.006	-0.004	20925.184	4.162
21.400	3.341	---	---	231116.686	Equation 6.10.7.1.1-1	1	1	56593.794	8032.053	6008.529	-0.028	0.009	0.007	39754.003	8.917
23.000	3.025	---	---	231116.686	Equation 6.10.7.1.1-1	1	1	60450.610	8572.592	6412.890	-0.038	0.011	0.008	42608.106	9.663
25.900	2.468	---	---	231116.686	Equation 6.10.7.1.1-1	1	1	67236.154	9534.464	7132.436	0.015	0.014	0.010	47970.554	13.022
26.100	3.537	---	---	289532.167	Equation 6.10.7.1.1-1	1	1	67692.321	9572.968	7161.241	0.005	0.008	0.006	48349.022	7.439
34.500	2.799	---	---	289532.167	Equation 6.10.7.1.1-1	1	1	86036.120	12139.429	9081.130	0.077	-0.002	-0.001	62093.365	2.408
41.900	2.159	---	---	289532.167	Equation 6.10.7.1.1-1	1	1	100643.237	14171.398	10601.183	0.221	-0.018	-0.013	72613.301	2.753
42.000	3.489	---	---	384994.225	Equation 6.10.7.1.1-1	1	1	100833.305	14175.762	10604.448	0.064	-0.005	-0.004	72760.842	0.786

Date:	8/2/2021	Span3-5ft-WB.lbsx	
Time:	3:01 PM	Bentley LEAP Bridge Steel [AASHTO LRFD 8th Ed. with 2017 Interims]	v21.00.00.28

FLEXURE RATING

POI Loc. (ft)	Moment Rating Factor	Vehicle Tonnage (Tons)	Rating Tonnage (Tons)	Moment/Stress Resistance (kip-in / ksi)	Controlling Equation	φc	φs	DC1 (kip-in / ksi)	DC2 (kip-in / ksi)	DW (kip-ft / ksi)	flDC1 (ksi)	flDC2 (ksi)	flDW (ksi)	LL (kip-in / ksi)	flLL (ksi)
42.100	3.478	---	---	384994.225	Equation 6.10.7.1.1-1	1	1	101020.291	14196.870	10620.238	0.064	-0.005	-0.004	72891.139	0.804
42.300	3.457	---	---	384994.225	Equation 6.10.7.1.1-1	1	1	101393.173	14248.920	10659.174	0.066	-0.005	-0.004	73151.732	0.842
46.000	3.084	---	---	384994.225	Equation 6.10.7.1.1-1	1	1	108100.900	15173.129	11350.547	0.100	-0.008	-0.006	77994.900	1.604
57.500	2.420	---	---	384994.225	Equation 6.10.7.1.1-1	1	1	126177.810	17682.483	13227.718	0.067	-0.008	-0.006	91674.504	1.284
63.200	2.208	---	---	384994.225	Equation 6.10.7.1.1-1	1	1	133754.602	18727.442	14009.417	0.086	-0.009	-0.007	96656.342	1.186
69.000	2.012	---	---	384994.225	Equation 6.10.7.1.1-1	1	1	140519.526	19641.704	14693.350	0.153	-0.013	-0.010	101885.850	1.282
80.500	1.758	---	---	384994.225	Equation 6.10.7.1.1-1	1	1	150751.583	21060.934	15755.030	0.101	-0.011	-0.008	109702.026	1.334
84.100	1.701	---	---	384994.225	Equation 6.10.7.1.1-1	1	1	153187.809	21396.570	16006.109	0.111	-0.011	-0.008	111629.327	1.370
92.000	1.600	---	---	384994.225	Equation 6.10.7.1.1-1	1	1	157250.225	21938.197	16411.283	0.196	-0.016	-0.012	115024.860	1.681
103.625	1.555	---	---	384994.225	Equation 6.10.7.1.1-1	1	1	159619.334	22278.985	16666.217	0.122	-0.012	-0.009	116869.878	1.565
105.000	1.555	---	---	384994.225	Equation 6.10.7.1.1-1	1	1	159646.460	22282.730	16669.018	0.123	-0.012	-0.009	116859.876	1.568

Date:	8/2/2021	Span3-5ft-WB.lbsx	
Time:	3:01 PM	Bentley LEAP Bridge Steel [AASHTO LRFD 8th Ed. with 2017 Interims]	v21.00.00.28

FLEXURE RATING

POI Loc. (ft)	Moment Rating Factor	Vehicle Tonnage (Tons)	Rating Tonnage (Tons)	Moment/Stress Resistance (kip-in / ksi)	Controlling Equation	φc	φs	DC1 (kip-in / ksi)	DC2 (kip-in / ksi)	DW (kip-ft / ksi)	flDC1 (ksi)	flDC2 (ksi)	flDW (ksi)	LL (kip-in / ksi)	flLL (ksi)
115.250	1.574	---	---	384994.225	Equation 6.10.7.1.1-1	1	1	158198.808	22068.366	16508.660	0.186	-0.015	-0.011	116460.828	1.570
125.900	1.688	---	---	384994.225	Equation 6.10.7.1.1-1	1	1	153178.510	21395.395	16005.231	0.107	-0.011	-0.008	112306.925	1.470
126.750	1.698	---	---	384994.225	Equation 6.10.7.1.1-1	1	1	152640.993	21320.407	15949.135	0.106	-0.010	-0.008	112056.048	1.471
138.250	1.899	---	---	384994.225	Equation 6.10.7.1.1-1	1	1	143349.776	20030.344	14984.080	0.140	-0.011	-0.009	106041.798	1.391
146.800	2.151	---	---	384994.225	Equation 6.10.7.1.1-1	1	1	133738.670	18726.058	14008.383	0.082	-0.008	-0.006	99786.234	0.917
149.750	2.258	---	---	384994.225	Equation 6.10.7.1.1-1	1	1	129944.484	18202.305	13616.578	0.076	-0.007	-0.006	97325.712	0.778
161.250	2.813	---	---	384994.225	Equation 6.10.7.1.1-1	1	1	112804.692	15825.902	11838.866	0.114	-0.009	-0.007	85381.290	0.755
167.700	3.297	---	---	384994.225	Equation 6.10.7.1.1-1	1	1	101378.205	14254.042	10663.006	0.062	-0.006	-0.004	76595.368	0.931
167.900	3.314	---	---	384994.225	Equation 6.10.7.1.1-1	1	1	101005.459	14202.034	10624.102	0.061	-0.006	-0.004	76307.233	0.954
168.000	2.042	---	---	289532.167	Equation 6.10.7.1.1-1	1	1	100818.698	14181.457	10608.708	0.207	-0.019	-0.014	76163.166	3.323
168.100	2.048	---	---	289532.167	Equation 6.10.7.1.1-1	1	1	100628.821	14177.100	10605.448	0.201	-0.019	-0.014	76005.872	3.349

Date:	8/2/2021	Span3-5ft-WB.lbsx	
Time:	3:01 PM	Bentley LEAP Bridge Steel [AASHTO LRFD 8th Ed. with 2017 Interims]	v21.00.00.28

FLEXURE RATING

POI Loc. (ft)	Moment Rating Factor	Vehicle Tonnage (Tons)	Rating Tonnage (Tons)	Moment/Stress Resistance (kip-in / ksi)	Controlling Equation	φc	φs	DC1 (kip-in / ksi)	DC2 (kip-in / ksi)	DW (kip-ft / ksi)	flDC1 (ksi)	flDC2 (ksi)	flDW (ksi)	LL (kip-in / ksi)	flLL (ksi)
172.750	2.341	---	---	289532.167	Equation 6.10.7.1.1-1	1	1	91628.964	12927.354	9670.552	0.121	-0.013	-0.010	69306.152	4.497
183.900	3.209	---	---	289532.167	Equation 6.10.7.1.1-1	1	1	67714.908	9583.089	7168.812	0.060	-0.012	-0.009	51496.317	9.572
184.100	2.229	---	---	231116.686	Equation 6.10.7.1.1-1	1	1	67256.322	9544.225	7139.739	0.111	-0.022	-0.016	51239.660	16.478
184.250	2.445	---	---	231116.686	Equation 6.10.7.1.1-1	1	1	66912.732	9498.752	7105.722	0.058	-0.013	-0.010	50977.836	10.465
188.600	3.114	---	---	231116.686	Equation 6.10.7.1.1-1	1	1	56586.820	8052.270	6023.654	0.042	-0.014	-0.010	43647.330	8.488
197.125	5.872	---	---	231116.686	Equation 6.10.7.1.1-1	1	1	34934.324	5001.574	3741.522	-0.028	-0.017	-0.012	27365.974	4.580
209.400	130.296	---	---	231116.686	Equation 6.10.7.1.1-1	1	1	410.341	60.205	45.038	-0.140	-0.024	-0.018	330.274	1.310
209.500	999.990	---	---	231116.686	Equation 6.10.7.1.1-1	1	1	0.000	0.000	0.000	0.000	0.000	0.000	0.000	0.000
209.600	110.826	---	---	48.881	Equation 6.10.8.1.1-1 lateral torsion buckling	1	1	-0.003	0.001	0.001	-0.110	-0.020	-0.015	-0.095	1.037
210.000	418.254	---	---	48.881	Equation 6.10.8.1.1-1 lateral torsion buckling	1	1	0.000	0.000	0.000	-0.009	-0.001	-0.001	-0.003	0.342

SHEAR RATING

POI Loc. (ft)	Shear Rating Factor	Vehicle Tonnage (Tons)	Rating Tonnage (Tons)	Shear Resistance (kip)	Controlling Equation	φc	φs	DC1 (kip)	DC2 (kip)	DW (kip)	LL (kip)
0.000	43.667	---	---	1685.625	Equation 6.10.9.1-1	1.000	1.000	-0.526	0.125	0.094	-38.595
0.400	12.667	---	---	1685.625	Equation 6.10.9.1-1	1.000	1.000	-1.793	-0.016	-0.012	133.219
0.500	6.286	---	---	1685.625	Equation 6.10.9.1-1	1.000	1.000	248.868	36.129	27.027	218.506
0.600	6.287	---	---	1685.625	Equation 6.10.9.1-1	1.000	1.000	248.836	36.123	27.022	218.506
11.500	2.418	---	---	761.178	Equation 6.10.9.1-1	1.000	1.000	224.297	32.360	24.208	198.678
21.400	2.819	---	---	761.178	Equation 6.10.9.1-1	1.000	1.000	202.685	28.937	21.647	180.191
23.000	2.857	---	---	761.178	Equation 6.10.9.1-1	1.000	1.000	199.417	28.386	21.235	179.257
25.900	5.129	---	---	1124.840	Equation 6.10.9.1-1	1.000	1.000	192.243	27.388	20.488	172.503
26.100	5.138	---	---	1124.840	Equation 6.10.9.1-1	1.000	1.000	191.476	27.317	20.435	172.370
34.500	2.883	---	---	678.990	Equation 6.10.9.1-1	1.000	1.000	172.767	24.411	18.261	160.785
41.900	3.200	---	---	678.990	Equation 6.10.9.1-1	1.000	1.000	156.716	21.850	16.345	151.269

SHEAR RATING

POI Loc. (ft)	Shear Rating Factor	Vehicle Tonnage (Tons)	Rating Tonnage (Tons)	Shear Resistance (kip)	Controlling Equation	φc	φs	DC1 (kip)	DC2 (kip)	DW (kip)	LL (kip)
42.000	4.695	---	---	904.929	Equation 6.10.9.1-1	1.000	1.000	156.521	21.816	16.320	151.269
42.100	4.708	---	---	904.929	Equation 6.10.9.1-1	1.000	1.000	155.872	21.777	16.291	151.029
42.300	4.726	---	---	904.929	Equation 6.10.9.1-1	1.000	1.000	155.451	21.708	16.239	150.549
46.000	3.853	---	---	747.024	Equation 6.10.9.1-1	1.000	1.000	146.936	20.428	15.281	146.470
57.500	4.562	---	---	747.024	Equation 6.10.9.1-1	1.000	1.000	117.926	16.450	12.306	131.593
63.200	4.993	---	---	747.024	Equation 6.10.9.1-1	1.000	1.000	104.505	14.476	10.829	123.617
69.000	5.377	---	---	747.024	Equation 6.10.9.1-1	1.000	1.000	90.645	12.462	9.322	118.021
80.500	6.277	---	---	747.024	Equation 6.10.9.1-1	1.000	1.000	61.074	8.494	6.354	106.908
84.100	6.659	---	---	747.024	Equation 6.10.9.1-1	1.000	1.000	52.547	7.246	5.421	102.386
92.000	7.337	---	---	742.922	Equation 6.10.9.1-1	1.000	1.000	33.793	4.502	3.368	95.572
103.625	8.682	---	---	742.922	Equation 6.10.9.1-1	1.000	1.000	3.745	0.496	0.371	85.038

SHEAR RATING

POI Loc. (ft)	Shear Rating Factor	Vehicle Tonnage (Tons)	Rating Tonnage (Tons)	Shear Resistance (kip)	Controlling Equation	φc	φs	DC1 (kip)	DC2 (kip)	DW (kip)	LL (kip)
105.000	9.011	---	---	742.922	Equation 6.10.9.1-1	1.000	1.000	0.372	0.019	0.014	82.402
115.250	8.434	---	---	742.922	Equation 6.10.9.1-1	1.000	1.000	-27.190	-3.539	-2.648	-84.130
125.900	7.350	---	---	747.024	Equation 6.10.9.1-1	1.000	1.000	-51.980	-7.234	-5.412	-92.847
126.750	7.214	---	---	747.024	Equation 6.10.9.1-1	1.000	1.000	-54.243	-7.530	-5.633	-94.211
138.250	6.051	---	---	747.024	Equation 6.10.9.1-1	1.000	1.000	-84.075	-11.488	-8.594	-106.239
146.800	5.326	---	---	747.024	Equation 6.10.9.1-1	1.000	1.000	-103.970	-14.453	-10.812	-115.993
149.750	5.036	---	---	747.024	Equation 6.10.9.1-1	1.000	1.000	-111.129	-15.475	-11.576	-120.909
161.250	4.161	---	---	747.024	Equation 6.10.9.1-1	1.000	1.000	-140.450	-19.429	-14.534	-137.614
167.700	4.355	---	---	831.150	Equation 6.10.9.1-1	1.000	1.000	-155.281	-21.663	-16.206	-146.495
167.900	4.335	---	---	831.150	Equation 6.10.9.1-1	1.000	1.000	-155.702	-21.732	-16.257	-147.038
168.000	2.936	---	---	626.874	Equation 6.10.9.1-1	1.000	1.000	-156.362	-21.770	-16.285	-147.309

SHEAR RATING

POI Loc. (ft)	Shear Rating Factor	Vehicle Tonnage (Tons)	Rating Tonnage (Tons)	Shear Resistance (kip)	Controlling Equation	φc	φs	DC1 (kip)	DC2 (kip)	DW (kip)	LL (kip)
168.100	2.934	---	---	626.874	Equation 6.10.9.1-1	1.000	1.000	-156.557	-21.804	-16.311	-147.309
172.750	2.783	---	---	626.874	Equation 6.10.9.1-1	1.000	1.000	-166.638	-23.412	-17.514	-150.651
183.900	7.893	---	---	1557.297	Equation 6.10.9.1-1	1.000	1.000	-191.218	-27.270	-20.400	-167.038
184.100	7.876	---	---	1557.297	Equation 6.10.9.1-1	1.000	1.000	-191.896	-27.336	-20.449	-167.291
184.250	2.651	---	---	684.644	Equation 6.10.9.1-1	1.000	1.000	-193.646	-27.384	-20.485	-167.126
188.600	2.520	---	---	684.644	Equation 6.10.9.1-1	1.000	1.000	-202.811	-28.890	-21.612	-171.171
197.125	2.218	---	---	684.644	Equation 6.10.9.1-1	1.000	1.000	-221.256	-31.833	-23.813	-183.822
209.400	6.753	---	---	1685.625	Equation 6.10.9.1-1	1.000	1.000	-248.768	-36.071	-26.983	-203.433
209.500	6.753	---	---	1685.625	Equation 6.10.9.1-1	1.000	1.000	-248.799	-36.077	-26.988	-203.433
209.600	13.658	---	---	1685.625	Equation 6.10.9.1-1	1.000	1.000	1.772	-0.019	-0.014	-123.543
210.000	37.561	---	---	1685.625	Equation 6.10.9.1-1	1.000	1.000	0.505	-0.120	-0.090	44.869

Date:	8/2/2021	Span3-5ft-WB.lbsx	
Time:	3:01 PM	Bentley LEAP Bridge Steel [AASHTO LRFD 8th Ed. with 2017 Interims]	v21.00.00.28

SUMMARY REPORT

Load Rating Combination	Controlling POI Loc. (ft)	Based on	Controlling Equation	Rating Factor	Vehicle Tonnage (Tons)	Rating Tonnage (Tons)
Design Inventory	105.000	Flexure	Equation 6.10.7.1.1-1	1.199	---	---
Design Operating	105.000	Flexure	Equation 6.10.7.1.1-1	1.555	---	---
Permit	105.000	Flexure	Equation 6.10.7.1.1-1	1.489	59.995	89.303

e. LEAP Concrete Bridge Input – Span 4, 5 and 6

Bentley				Sheet #	1
				Job #	
Program:	LEAP® Bridge Concrete CONNECT Edition	BASE Consultants		Designed	KV
Module:	Precast/Prestressed Girder	Copyright © Bentley Systems, Inc. 2021		Date	Jan/7/2021
Version:	21.00.00.24	www.bentley.com	Phone: 1-800-778-4277	Checked	RK
File Name:	**Span4-5-6-WB(5ft).lbcx**			Date	Jan/7/2021

PROJECT DATA

Project:	SR 417 OVER LAKE BOSSE
Designer:	KV
Date:	Jan/7/2021
Checked By:	RK
Date Checked:	Jan/7/2021
User job number:	
State:	FL, State Job #:CFX # 414-227
State Specification:	None
Design Code:	AASHTO LRFD - 8th Edition
Units:	US
Span Type:	Multi-Span (Continuous)
Flared Girder:	No
Comments:	Concrete Span 4-5-6
File Name:	C:\Users\KaranBASE\AppData\Local\Temp\OBD20210802104510442\Standalone\Standalone2\Span4-5-6-WB(5ft).lbcx

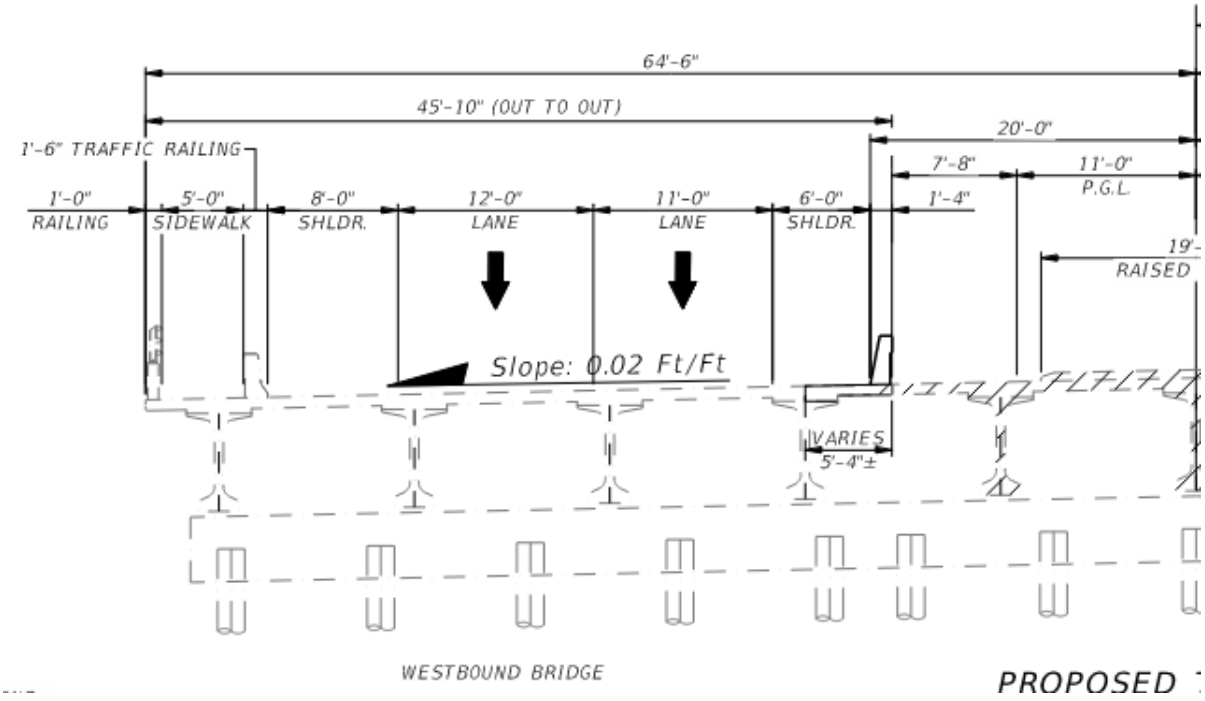

GEOMETRY DATA

BRIDGE LAYOUT

Overall Width (ft)	45.840
Left curb (ft)	1.500
Right curb (ft)	1.500
Curb-to-curb width (ft)	42.840
Number of spans	3
Number of lanes	3
Lane width (ft)	12.000
Eff Deck thick (in)	8.000
Sacrificial thick (in)	0.000
Haunch thickness (in)	2.000
Haunch width (in)	48.000

SPAN DATA

Span	Pier-to-pier ft	Precast ft	Brg-to-brg ft	Pier CL ft	Release ft	StartSkew	EndSkew	Bridge c/s M.I. in4
1	101.667	101.167	100.166	0.000	101.167	0.38	1.25	6230100.00
2	101.667	100.667	99.663	0.500	100.667	1.25	2.12	6230100.00
3	101.667	101.167	100.165	0.500	101.167	2.12	2.97	6230100.00

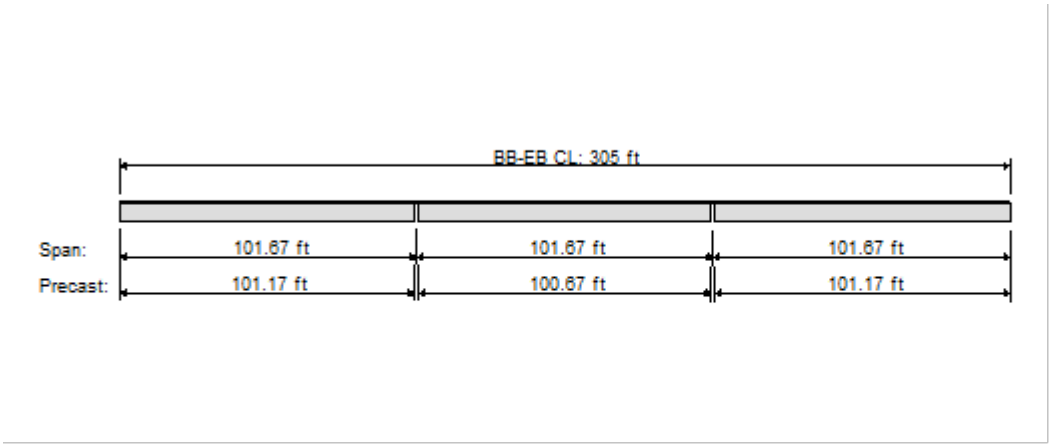

BR01 - Bridge elevation

BEAM DATA

Span: 1

No	ID	Loc-prev ft	Area in2	MI(Ixx) in4	Height in	Yb in	B-topg in	B-trib ft
1	Florida bulb tee-72	4.510	901.1	639096.4	72.00	34.34	48.00	10.510
2	Florida bulb tee-72	12.000	901.1	639096.4	72.00	34.34	48.00	12.000
3	Florida bulb tee-72	12.000	901.1	639096.4	72.00	34.34	48.00	12.000
4	Florida bulb tee-72	12.000	901.1	639096.4	72.00	34.34	48.00	11.330

Span: 2

No	ID	Loc-prev ft	Area in2	MI(Ixx) in4	Height in	Yb in	B-topg in	B-trib ft
1	Florida bulb tee-72	4.510	901.1	639096.4	72.00	34.34	48.00	10.510
2	Florida bulb tee-72	12.000	901.1	639096.4	72.00	34.34	48.00	12.000
3	Florida bulb tee-72	12.000	901.1	639096.4	72.00	34.34	48.00	12.000
4	Florida bulb tee-72	12.000	901.1	639096.4	72.00	34.34	48.00	11.330

Span: 3

No	ID	Loc-prev ft	Area in2	MI(Ixx) in4	Height in	Yb in	B-topg in	B-trib ft
1	Florida bulb tee-72	4.510	901.1	639096.4	72.00	34.34	48.00	10.510
2	Florida bulb tee-72	12.000	901.1	639096.4	72.00	34.34	48.00	12.000
3	Florida bulb tee-72	12.000	901.1	639096.4	72.00	34.34	48.00	12.000
4	Florida bulb tee-72	12.000	901.1	639096.4	72.00	34.34	48.00	11.330

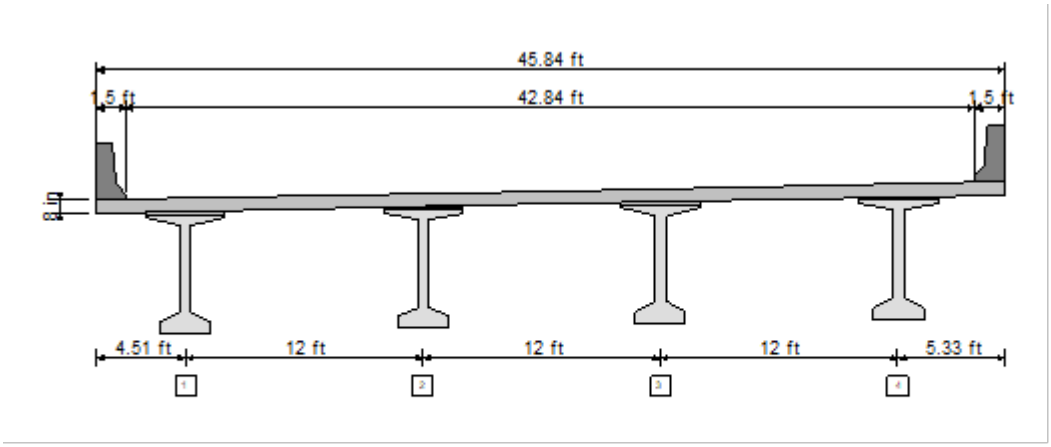

BR01 - Bridge cross section for Span 1, Span 2, Span 3

MATERIAL DATA - Project Level

As defined in Material Tab. For beam level properties look at Beam Specific output.

CONCRETE PROPERTIES

	Precast Release	Precast Final	C.I.P
f'c (ksi)	4.500	6.500	4.500
Wc (pcf)	150.000	150.000	150.000
Concrete Type	Normal	Normal	Normal
Lambda	1.000	1.000	1.000
Ec (ksi)	4435.310	5007.550	4435.310
K1	1.000	1.000	1.000
Thermal coeff.(1/°F)	0.00000600		

STRAND AND REBAR PROPERTIES

PRESTRESSED STEEL:

1/2-270K-LL, Low relaxation strands
Straight Pattern
Strand Diameter = 0.500 in
Tensile Strength(fpu) = 270.0 ksi
Use transformed strand and rebar: No

REINFORCING STEEL:

Tension/Shear steel: fy = 60.0 ksi Es = 29000 ksi

LOADS DATA

Loads generated using Permanent Load Wizard: YES

Left Barrier Weight, klf	0.255
Right Barrier Weight, klf	0.000
Left Curb Weight, klf	0.420
Right Curb Weight, klf	0.430
Left Sidewalk, klf	0.080
Right Sidewalk, klf	0.000
Future Wearing Surface, ksf	0.015
Sacrificial Wearing Surface, in	0.000
Stay in Place Deck Forms, klf	0.160

DEAD LOADS ON PRECAST

UNITS: (Point: kips, Location: ft, Line: klf, Trapez: klf)

Span	Beam	DC/DW	Type	Mag.1	Loc.1	Mag.2	Loc.2	Description
1	1	DC	Line	0.160	0.000	0.160	100.166	Stay-in-Place Deck Forms
1	2	DC	Line	0.160	0.000	0.160	100.166	Stay-in-Place Deck Forms
1	4	DC	Line	0.160	0.000	0.160	100.166	Stay-in-Place Deck Forms
1	3	DC	Line	0.160	0.000	0.160	100.166	Stay-in-Place Deck Forms
2	1	DC	Line	0.160	0.000	0.160	99.663	Stay-in-Place Deck Forms
2	2	DC	Line	0.160	0.000	0.160	99.663	Stay-in-Place Deck Forms
2	3	DC	Line	0.160	0.000	0.160	99.663	Stay-in-Place Deck Forms
2	4	DC	Line	0.160	0.000	0.160	99.663	Stay-in-Place Deck Forms
3	1	DC	Line	0.160	0.000	0.160	100.165	Stay-in-Place Deck Forms
3	2	DC	Line	0.160	0.000	0.160	100.165	Stay-in-Place Deck Forms
3	3	DC	Line	0.160	0.000	0.160	100.165	Stay-in-Place Deck Forms
3	4	DC	Line	0.160	0.000	0.160	100.165	Stay-in-Place Deck Forms

DIAPHRAGM LOADS - using Wizard

Span	Magnitude (plf)	Location (ft)	Skew (deg)
1	0.637	0.000	0.000
1	0.637	99.000	0.000
2	0.637	1.000	0.000
2	0.637	99.000	0.000
3	0.637	1.000	0.000
3	0.637	99.000	0.000

Span	Beam	Load (kips)	Location (ft)
1	1	0.004	0.122
1	1	0.004	98.878
1	2	0.007	0.043
1	2	0.007	98.957
1	3	0.007	0.037
1	3	0.007	99.037
1	4	0.004	0.117
1	4	0.004	99.117
2	1	0.004	0.598
2	1	0.004	98.598
2	2	0.007	0.860
2	2	0.007	98.860
2	3	0.007	1.122
2	3	0.007	99.122
2	4	0.004	1.384
2	4	0.004	99.384
3	1	0.004	0.319
3	1	0.004	98.319
3	2	0.007	0.763
3	2	0.007	98.763
3	3	0.007	1.207
3	3	0.007	99.207
3	4	0.004	1.651
3	4	0.004	99.651

DEAD LOADS ON COMPOSITE

UNITS: (Point: kips, Location: ft, Line: klf, Trapez: klf, Area: ksf, Width: ft)

Span	DC/DW	Type	Mag.1	Loc.1/Width	Mag.2	Loc.2	Description
1	DC	Line	0.420	0.000	0.420	100.166	Left Curb Weight
1	DC	Line	0.430	0.000	0.430	100.166	Right Curb Weight
1	DC	Line	0.255	0.000	0.255	100.166	Left Barrier Weight
1	DC	Line	0.080	0.000	0.080	100.166	Left Sidewalk
1	DW	Line	0.116	0.000	0.116	100.166	Utility
1	DW	Area	0.015	42.840	-	-	Future Wearing Surface
2	DC	Line	0.420	0.000	0.420	99.663	Left Curb Weight
2	DC	Line	0.430	0.000	0.430	99.663	Right Curb Weight
2	DC	Line	0.255	0.000	0.255	99.663	Left Barrier Weight
2	DC	Line	0.080	0.000	0.080	99.663	Left Sidewalk
2	DW	Area	0.015	42.840	-	-	Future Wearing Surface
2	DW	Line	0.116	0.000	0.116	99.663	Utility
3	DC	Line	0.420	0.000	0.420	100.165	Left Curb Weight
3	DC	Line	0.430	0.000	0.430	100.165	Right Curb Weight
3	DC	Line	0.255	0.000	0.255	100.165	Left Barrier Weight
3	DC	Line	0.080	0.000	0.080	100.165	Left Sidewalk
3	DW	Area	0.015	42.840	-	-	Future Wearing Surface
3	DW	Line	0.116	0.000	0.116	100.165	Utility

TEMPERATURE LOADS - NONE

LIVE LOADS

Live load deflection: not included.

ID	Type
Design Lane	Design Lane
Design Tandem	Design Tandem
Design Truck	Design Truck
Double Truck	Double Truck

Pedestrian Load - NONE

LIVE LOADS USED

LIVE LOAD LIBRARY: USLRFDTruckLib.shlib

1 ID: Design Lane

Description:	Design Lane as in AASHTO-LRFD
Type:	Design Lane

Lane Load:	Intensity = 0.64 klf,	Width = 10.00 ft

2 ID: Design Tandem

Description:	Design Tandem as in AASHTO-LRFD
Type:	Design Tandem

First Axle Magnitude = 25.00 k,	Wheel Spacing = 6.00 ft,	Truck Width = 10.00 ft

#	Magnitude, k	Max Spacing, ft	Min Spacing, ft	Increment, ft
1	25.00	4.00	4.00	0.00

3 ID: Design Truck

Description:	Design Truck as in AASHTO-LRFD
Type:	Design Truck

First Axle Magnitude = 8.00 k,	Wheel Spacing = 6.00 ft,	Truck Width = 10.00 ft

#	Magnitude, k	Max Spacing, ft	Min Spacing, ft	Increment, ft
1	32.00	14.00	14.00	0.00
2	32.00	30.00	14.00	2.00

4 ID: Double Truck

Description:	Double Truck as in AASHTO-LRFD
Type:	Double Truck

First Axle Magnitude = 8.00 k,	Wheel Spacing = 6.00 ft,	Truck Width = 10.00 ft

#	Magnitude, k	Max Spacing, ft	Min Spacing, ft	Increment, ft
1	32.00	14.00	14.00	0.00
2	32.00	14.00	14.00	0.00
3	8.00	300.00	50.00	14.00
4	32.00	14.00	14.00	0.00
5	32.00	14.00	14.00	0.00

5 ID: Fatigue Truck

Description:	Fatigue Truck as in AASHTO-LRFD
Type:	Fatigue Truck

First Axle Magnitude = 8.00 k,	Wheel Spacing = 6.00 ft,	Truck Width = 10.00 ft

#	Magnitude, k	Max Spacing, ft	Min Spacing, ft	Increment, ft
1	32.00	14.00	14.00	0.00
2	32.00	30.00	30.00	0.00

RATING LOADS

Design Live Load Type,	Weight (tons),	Wheel Spacing(ft)
HL93 Design Load	-	-

Permit Live Load Type,	Weight (tons),	Wheel Spacing(ft)
FL120	60.00	6.00

RATING LOADS DETAILS
Design Rating Loads:

1 ID: HL93 Design Load

Description:	HL93 Design Load - Internal
Type:	Design Lane + Design Truck + Design Tandem + Double Truck

* HL93 Internal loads:

HL93 Load ID: Design Lane *

Description:	Design Lane - Internal
Type:	Design Lane

Lane Load:	Intensity = 0.64 klf,	Width = 10.00 ft

HL93 Load ID: Design Tandem *

Description:	Design Tandem - Internal
Type:	Design Tandem

First Axle Magnitude = 25.00 k,	Wheel Spacing = 6.00 ft,	Truck Width = 10.00 ft

#	Magnitude, k	Max Spacing, ft	Min Spacing, ft	Increment, ft
1	25.00	4.00	4.00	0.00

HL93 Load ID: Design Truck *

Description:	Design Truck - Internal
Type:	Design Truck

First Axle Magnitude = 8.00 k,	Wheel Spacing = 6.00 ft,	Truck Width = 10.00 ft

#	Magnitude, k	Max Spacing, ft	Min Spacing, ft	Increment, ft
1	32.00	14.00	14.00	0.00
2	32.00	30.00	14.00	2.00

HL93 Load ID: Double Truck *

Description:	Double Truck - Internal
Type:	Double Truck

First Axle Magnitude = 8.00 k,	Wheel Spacing = 6.00 ft,	Truck Width = 10.00 ft

#	Magnitude, k	Max Spacing, ft	Min Spacing, ft	Increment, ft
1	32.00	14.00	14.00	0.00
2	32.00	14.00	14.00	0.00
3	8.00	300.00	50.00	14.00
4	32.00	14.00	14.00	0.00
5	32.00	14.00	14.00	0.00

Permit Rating Loads:

1 ID: FL120

Description:	FL120 Permit Vehicle
Type:	Permit Vehicle

Uniform Load	Intensity, klf	Location, ft	Length, ft
Preceding	0.00	0.00	0.00
Trailing	0.00	0.00	0.00

First Axle Magnitude = 13.33 k,	Wheel Spacing = 6.00 ft,	Truck Width = 10.00 ft

#	Magnitude, k	Max Spacing, ft	Min Spacing, ft	Increment, ft
1	53.33	14.00	14.00	0.00
2	53.33	14.00	14.00	0.00

ANALYSIS DATA

ANALYSIS PARAMETERS DATA

Truck impact:	1.330
Lane impact:	1.000
Strength II impact:	1.330
Fatigue impact:	1.150

DISTRIBUTION FACTORS (Art. 4.6.2.2):

Include sacrificial deck thick in ts:	NO
Is Span Post-tensioned:	NO
Include Rigid Cross Section Assumption (Art. 4.6.2.2.2d):	YES
ADTT (Average Daily Truck Traffic) :	5000
Percent of the specified force effect :	1.00
Apply reduction of Moment for skew:	YES

NOTE: Beam specific dead and live load DFs are printed in beam level reports.

LOAD FACTORS: (Table 3.4.1-1 & 3.4.1-2)

	Live	DC(max)	DC(min)	DW(max)	DW(min)
Service I:	1.00	1.00	1.00	1.00	1.00
Service III:	0.80	1.00	1.00	1.00	1.00
Strength I:	1.75	1.25	0.90	1.50	0.65
Fatigue I:	1.75	-	-	-	-

Ductility Factor:	1.00
Redundancy Factor:	1.00
Importance Factor:	1.00

PROJECT DESIGN PARAMETERS

MULTIPLIERS:

Trans len mult:	Bonded	1.00
	Debonded	1.00
Dev len mult:	Bonded	1.60
	Debonded	2.00

Camber & Deflection Multiplier (PCI ref.)

	Erection	Final
Prestress:	1.80	2.20
Self. Wt:	1.85	2.40
Deck + Haunch:		2.30
Diaphragm:		3.00
DL-Prec.:		3.00
DL-Comp.:		3.00

MOMENT AND SHEAR PROVISIONS:

Ultimate Moment Capacity, Mu-prvd computed:	Strain Compatibility method.
Ultimate Concrete Strain:	0.0030
Horizontal Shear, Beam and Slab effects in Vu:	INCLUDED
Negative Moment Design, Non-composite Moment effects in Mu:	INCLUDED

STRESS LIMITS (Art. 5.9.2):
STRESS LIMITS AT RELEASE BEFORE LOSSES (Using Advanced Settings):

		PRECAST	
Strength		4.50	ksi
Elasticity		4435.3	ksi
Max comp		2.93	ksi
Outer	15.00 %		
Max tens		-0.19	ksi
Max tens,	w/reinf	-0.81	ksi
Center	70.00 %		
Max tens		-0.19	ksi
Max tens,	w/reinf	-0.51	ksi

STRESS LIMITS AT FINAL AFTER LOSSES:

	PRECAST		DECK	
Strength	6.50	ksi	4.50	ksi
Elasticity	5007.55	ksi	4435.31	ksi

STRESS LIMITS AT FINAL 1 (P/S + DL + LL):

	PRECAST		DECK	
Max comp	3.90	ksi	2.70	ksi

STRESS LIMITS AT FINAL 2 (P/S + DL):

	PRECAST		DECK	
Max comp	2.93	ksi	2.02	ksi

FATIGUE I STRESS LIMITS AT FINAL 3 (50% P/S + 50% DL + F_LL) (Art. 5.5.3.1):

	PRECAST		DECK	
Max comp	2.60	ksi	-	ksi

SERVICE III (Tension):

	PRECAST		DECK	
Max tens	-0.48	ksi	-0.40	ksi

RESISTANCE FACTORS (Art. 5.5.4.2):

Flexure Reinforced	
Compression controlled sections	0.75
Tension controlled sections	0.90
Flexure Prestressed	
Compression controlled sections	0.75
Tension controlled sections	1.00
Shear	0.90

PRESTRESS LOSSES:

Time Dependent Losses, Approximate Method (Art.5.9.3.3)
Days to release = 0.75
Rel. Humid.(RH) = 75.0 %

RATING PARAMETERS

Rating Factors	References	Values
Condition Factor	Table 6A.4.2.3-1	1.00
System Factor for Flexural Effect	Table 6A.4.2.4-1	1.00
System Factor for Shear Effect	Art. 6A.4.2.4	1.00
ADTT	Section C3.6.1.1.2	5000
Dynamic Load Factor for Design Level	Art. 6A.4.3.3	0.33
Dynamic Load Factor for Legal and Permit Level	Table C6A.4.4.3-1	0.33

For Flexural Effect: Condition Factor * System Factor = 1.00 >= 0.85 (Art. 6A.4.2.1) OK
For Shear Effect: Condition Factor * System Factor = 1.00 >= 0.85 (Art. 6A.4.2.1 and 6A.4.2.4) OK

Dead Load Factors (Table 6A.4.2.2-1)

Limit State	DC	DW
Strength I	1.25	1.50
Strength II	1.25	1.50
Service I	1.00	1.00
Service III	1.00	1.00

Design Live Load Factors (Table 6A.4.3.2.2-1)

Limit State	Inventory	Operating
Strength I	1.75	1.35
Service I	-	-
Service III	0.80	-

Permit Live Load Factors (Table 6A.4.5.4.2a-1)

Load	Type	Frequency	Loading Condition	Permit Factor
FL120	Routine	Unlimited	Mix with traffic	1.30

Permit Live Load Stresses Factors

Limit State	Values
Service I	1.00
Service III	-

Allowable Stresses (ksi)

Rating Level	Concrete Compression	Concrete Tension	Steel
Design Inventory	0.60 x f'c = 3.90	0.19 x sqrt(f'c) = 0.48	0.90 x f'y = 218.70
Design Operating	0.60 x f'c = 3.90	0.19 x sqrt(f'c) = 0.48	0.90 x f'y = 218.70
Legal	0.60 x f'c = 3.90	0.19 x sqrt(f'c) = 0.48	-
Permit	0.60 x f'c = 3.90	0.19 x sqrt(f'c) = 0.48	0.90 x f'y = 218.70

Consider shear reinf. across plane (FDOT alternative): No

BEAM REINFORCEMENT

BEAM SPECIFIC MATERIAL PROPERTIES:

Span#, Beam#	Tendon-ID	Girder-f'ci ksi	Girder-f'c ksi	Deck-f'c ksi
Span:1, Beam:1	1/2-270K-LL	4.50	6.50	4.50
Span:1, Beam:2	1/2-270K-LL	4.50	6.50	4.50
Span:1, Beam:3	1/2-270K-LL	4.50	6.50	4.50
Span:1, Beam:4	1/2-270K-LL	4.50	6.50	4.50
Span:2, Beam:1	1/2-270K-LL	4.50	6.50	4.50
Span:2, Beam:2	1/2-270K-LL	4.50	6.50	4.50
Span:2, Beam:3	1/2-270K-LL	4.50	6.50	4.50
Span:2, Beam:4	1/2-270K-LL	4.50	6.50	4.50
Span:3, Beam:1	1/2-270K-LL	4.50	6.50	4.50
Span:3, Beam:2	1/2-270K-LL	4.50	6.50	4.50
Span:3, Beam:3	1/2-270K-LL	4.50	6.50	4.50
Span:3, Beam:4	1/2-270K-LL	4.50	6.50	4.50

Span:1, Beam:1

PRESTRESSED STEEL:

46 strands, 1/2-270K-LL, Low relaxation strands
Straight Pattern

END PATTERN (Ycg = 6.13 in):

13 @ 3.000 in	13 @ 5.000 in	11 @ 7.000 in	5 @ 9.000 in
1 @ 11.000 in	1 @ 13.000 in	1 @ 15.000 in	1 @ 17.000 in

REINFORCING STEEL:

Tension	steel:	
fy	60.0	ksi
Es	29000	ksi

Stirrups:

# legs	Size	fy (ksi)	Area (in2)	Spacing (in)	Start (ft)	End (ft)	Extends into Deck
2	US#4[M13]	60.0	0.40	3.00	0.2083	1.5000	Yes
2	US#4[M13]	60.0	0.40	6.00	1.5000	5.5000	Yes
1	US#4[M13]	60.0	0.20	3.00	5.5000	9.5000	Yes
1	US#4[M13]	60.0	0.20	4.00	9.5000	16.5000	Yes
1	US#4[M13]	60.0	0.20	6.00	16.5000	24.5000	Yes
1	US#4[M13]	60.0	0.20	8.00	24.5000	42.5000	Yes
1	US#4[M13]	60.0	0.20	10.00	42.5000	58.6667	Yes
1	US#4[M13]	60.0	0.20	8.00	58.6667	76.6667	Yes
1	US#4[M13]	60.0	0.20	6.00	76.6667	84.6667	Yes
1	US#4[M13]	60.0	0.20	4.00	84.6667	91.6667	Yes
1	US#4[M13]	60.0	0.20	3.00	91.6667	95.6667	Yes
2	US#4[M13]	60.0	0.40	6.00	95.6667	99.6667	Yes
2	US#4[M13]	60.0	0.40	3.00	99.6667	100.9583	Yes

Span:1, Beam:2

PRESTRESSED STEEL:
46 strands, 1/2-270K-LL, Low relaxation strands
Straight Pattern

END PATTERN (Ycg = 6.13 in):

13 @ 3.000 in	13 @ 5.000 in	11 @ 7.000 in	5 @ 9.000 in
1 @ 11.000 in	1 @ 13.000 in	1 @ 15.000 in	1 @ 17.000 in

REINFORCING STEEL:

Tension	steel:	
fy	60.0	ksi
Es	29000	ksi

Stirrups:

# legs	Size	fy (ksi)	Area (in2)	Spacing (in)	Start (ft)	End (ft)	Extends into Deck
2	US#4[M13]	60.0	0.40	3.00	0.2083	1.5000	Yes
2	US#4[M13]	60.0	0.40	6.00	1.5000	5.5000	Yes
1	US#4[M13]	60.0	0.20	3.00	5.5000	9.5000	Yes
1	US#4[M13]	60.0	0.20	4.00	9.5000	16.5000	Yes
1	US#4[M13]	60.0	0.20	6.00	16.5000	24.5000	Yes
1	US#4[M13]	60.0	0.20	8.00	24.5000	42.5000	Yes
1	US#4[M13]	60.0	0.20	10.00	42.5000	58.6667	Yes
1	US#4[M13]	60.0	0.20	8.00	58.6667	76.6667	Yes
1	US#4[M13]	60.0	0.20	6.00	76.6667	84.6667	Yes
1	US#4[M13]	60.0	0.20	4.00	84.6667	91.6667	Yes
1	US#4[M13]	60.0	0.20	3.00	91.6667	95.6667	Yes
2	US#4[M13]	60.0	0.40	6.00	95.6667	99.6667	Yes
2	US#4[M13]	60.0	0.40	3.00	99.6667	100.9583	Yes

Span:1, Beam:3

PRESTRESSED STEEL:
46 strands, 1/2-270K-LL, Low relaxation strands
Straight Pattern

END PATTERN (Ycg = 6.13 in):

13 @ 3.000 in	13 @ 5.000 in	11 @ 7.000 in	5 @ 9.000 in
1 @ 11.000 in	1 @ 13.000 in	1 @ 15.000 in	1 @ 17.000 in

REINFORCING STEEL:

Tension	steel:	
fy	60.0	ksi
Es	29000	ksi

Stirrups:

# legs	Size	fy (ksi)	Area (in2)	Spacing (in)	Start (ft)	End (ft)	Extends into Deck
2	US#4[M13]	60.0	0.40	3.00	0.2083	1.5000	Yes
2	US#4[M13]	60.0	0.40	6.00	1.5000	5.5000	Yes
1	US#4[M13]	60.0	0.20	3.00	5.5000	9.5000	Yes
1	US#4[M13]	60.0	0.20	4.00	9.5000	16.5000	Yes
1	US#4[M13]	60.0	0.20	6.00	16.5000	24.5000	Yes
1	US#4[M13]	60.0	0.20	8.00	24.5000	42.5000	Yes
1	US#4[M13]	60.0	0.20	10.00	42.5000	58.6667	Yes
1	US#4[M13]	60.0	0.20	8.00	58.6667	76.6667	Yes
1	US#4[M13]	60.0	0.20	6.00	76.6667	84.6667	Yes
1	US#4[M13]	60.0	0.20	4.00	84.6667	91.6667	Yes
1	US#4[M13]	60.0	0.20	3.00	91.6667	95.6667	Yes
2	US#4[M13]	60.0	0.40	6.00	95.6667	99.6667	Yes
2	US#4[M13]	60.0	0.40	3.00	99.6667	100.9583	Yes

Span:1, Beam:4

PRESTRESSED STEEL:
46 strands, 1/2-270K-LL, Low relaxation strands
Straight Pattern

END PATTERN (Ycg = 6.13 in):

13 @ 3.000 in	13 @ 5.000 in	11 @ 7.000 in	5 @ 9.000 in
1 @ 11.000 in	1 @ 13.000 in	1 @ 15.000 in	1 @ 17.000 in

REINFORCING STEEL:

Tension	steel:	
fy	60.0	ksi
Es	29000	ksi

Stirrups:

# legs	Size	fy (ksi)	Area (in2)	Spacing (in)	Start (ft)	End (ft)	Extends into Deck
2	US#4[M13]	60.0	0.40	3.00	0.2083	1.5000	Yes
2	US#4[M13]	60.0	0.40	6.00	1.5000	5.5000	Yes
1	US#4[M13]	60.0	0.20	3.00	5.5000	9.5000	Yes
1	US#4[M13]	60.0	0.20	4.00	9.5000	16.5000	Yes
1	US#4[M13]	60.0	0.20	6.00	16.5000	24.5000	Yes
1	US#4[M13]	60.0	0.20	8.00	24.5000	42.5000	Yes
1	US#4[M13]	60.0	0.20	10.00	42.5000	58.6667	Yes
1	US#4[M13]	60.0	0.20	8.00	58.6667	76.6667	Yes
1	US#4[M13]	60.0	0.20	6.00	76.6667	84.6667	Yes
1	US#4[M13]	60.0	0.20	4.00	84.6667	91.6667	Yes
1	US#4[M13]	60.0	0.20	3.00	91.6667	95.6667	Yes
2	US#4[M13]	60.0	0.40	6.00	95.6667	99.6667	Yes
2	US#4[M13]	60.0	0.40	3.00	99.6667	100.9583	Yes

Span:2, Beam:1

PRESTRESSED STEEL:
46 strands, 1/2-270K-LL, Low relaxation strands
Straight Pattern

END PATTERN (Ycg = 6.13 in):

13 @ 3.000 in	13 @ 5.000 in	11 @ 7.000 in	5 @ 9.000 in
1 @ 11.000 in	1 @ 13.000 in	1 @ 15.000 in	1 @ 17.000 in

REINFORCING STEEL:

Tension	steel:	
fy	60.0	ksi
Es	29000	ksi

Stirrups:

# legs	Size	fy (ksi)	Area (in2)	Spacing (in)	Start (ft)	End (ft)	Extends into Deck
2	US#4[M13]	60.0	0.40	3.00	0.2083	1.5000	Yes
2	US#4[M13]	60.0	0.40	6.00	1.5000	5.5000	Yes
1	US#4[M13]	60.0	0.20	3.00	5.5000	9.5000	Yes
1	US#4[M13]	60.0	0.20	4.00	9.5000	16.5000	Yes
1	US#4[M13]	60.0	0.20	6.00	16.5000	24.5000	Yes
1	US#4[M13]	60.0	0.20	8.00	24.5000	42.5000	Yes
1	US#4[M13]	60.0	0.20	10.00	42.5000	58.1667	Yes
1	US#4[M13]	60.0	0.20	8.00	58.1667	76.1667	Yes
1	US#4[M13]	60.0	0.20	6.00	76.1667	84.1667	Yes
1	US#4[M13]	60.0	0.20	4.00	84.1667	91.1667	Yes
1	US#4[M13]	60.0	0.20	3.00	91.1667	95.1667	Yes
2	US#4[M13]	60.0	0.40	6.00	95.1667	99.1667	Yes
2	US#4[M13]	60.0	0.40	3.00	99.1667	100.4583	Yes

Span:2, Beam:2

PRESTRESSED STEEL:
46 strands, 1/2-270K-LL, Low relaxation strands
Straight Pattern

END PATTERN (Ycg = 6.13 in):

13 @ 3.000 in	13 @ 5.000 in	11 @ 7.000 in	5 @ 9.000 in
1 @ 11.000 in	1 @ 13.000 in	1 @ 15.000 in	1 @ 17.000 in

REINFORCING STEEL:

Tension	steel:	
fy	60.0	ksi
Es	29000	ksi

Stirrups:

# legs	Size	fy (ksi)	Area (in2)	Spacing (in)	Start (ft)	End (ft)	Extends into Deck
2	US#4[M13]	60.0	0.40	3.00	0.2083	1.5000	Yes
2	US#4[M13]	60.0	0.40	6.00	1.5000	5.5000	Yes
1	US#4[M13]	60.0	0.20	3.00	5.5000	9.5000	Yes
1	US#4[M13]	60.0	0.20	4.00	9.5000	16.5000	Yes
1	US#4[M13]	60.0	0.20	6.00	16.5000	24.5000	Yes
1	US#4[M13]	60.0	0.20	8.00	24.5000	42.5000	Yes
1	US#4[M13]	60.0	0.20	10.00	42.5000	58.1667	Yes
1	US#4[M13]	60.0	0.20	8.00	58.1667	76.1667	Yes
1	US#4[M13]	60.0	0.20	6.00	76.1667	84.1667	Yes
1	US#4[M13]	60.0	0.20	4.00	84.1667	91.1667	Yes
1	US#4[M13]	60.0	0.20	3.00	91.1667	95.1667	Yes
2	US#4[M13]	60.0	0.40	6.00	95.1667	99.1667	Yes
2	US#4[M13]	60.0	0.40	3.00	99.1667	100.4583	Yes

Span:2, Beam:3

PRESTRESSED STEEL:
46 strands, 1/2-270K-LL, Low relaxation strands
Straight Pattern

END PATTERN (Ycg = 6.13 in):

13 @ 3.000 in	13 @ 5.000 in	11 @ 7.000 in	5 @ 9.000 in
1 @ 11.000 in	1 @ 13.000 in	1 @ 15.000 in	1 @ 17.000 in

REINFORCING STEEL:

Tension	steel:	
fy	60.0	ksi
Es	29000	ksi

Stirrups:

# legs	Size	fy (ksi)	Area (in2)	Spacing (in)	Start (ft)	End (ft)	Extends into Deck
2	US#4[M13]	60.0	0.40	3.00	0.2083	1.5000	Yes
2	US#4[M13]	60.0	0.40	6.00	1.5000	5.5000	Yes
1	US#4[M13]	60.0	0.20	3.00	5.5000	9.5000	Yes
1	US#4[M13]	60.0	0.20	4.00	9.5000	16.5000	Yes
1	US#4[M13]	60.0	0.20	6.00	16.5000	24.5000	Yes
1	US#4[M13]	60.0	0.20	8.00	24.5000	42.5000	Yes
1	US#4[M13]	60.0	0.20	10.00	42.5000	58.1667	Yes
1	US#4[M13]	60.0	0.20	8.00	58.1667	76.1667	Yes
1	US#4[M13]	60.0	0.20	6.00	76.1667	84.1667	Yes
1	US#4[M13]	60.0	0.20	4.00	84.1667	91.1667	Yes
1	US#4[M13]	60.0	0.20	3.00	91.1667	95.1667	Yes
2	US#4[M13]	60.0	0.40	6.00	95.1667	99.1667	Yes
2	US#4[M13]	60.0	0.40	3.00	99.1667	100.4583	Yes

Span:2, Beam:4

PRESTRESSED STEEL:
46 strands, 1/2-270K-LL, Low relaxation strands
Straight Pattern

END PATTERN (Ycg = 6.13 in):

13 @ 3.000 in	13 @ 5.000 in	11 @ 7.000 in	5 @ 9.000 in
1 @ 11.000 in	1 @ 13.000 in	1 @ 15.000 in	1 @ 17.000 in

REINFORCING STEEL:

Tension	steel:	
fy	60.0	ksi
Es	29000	ksi

Stirrups:

# legs	Size	fy (ksi)	Area (in2)	Spacing (in)	Start (ft)	End (ft)	Extends into Deck
2	US#4[M13]	60.0	0.40	3.00	0.2083	1.5000	Yes
2	US#4[M13]	60.0	0.40	6.00	1.5000	5.5000	Yes
1	US#4[M13]	60.0	0.20	3.00	5.5000	9.5000	Yes
1	US#4[M13]	60.0	0.20	4.00	9.5000	16.5000	Yes
1	US#4[M13]	60.0	0.20	6.00	16.5000	24.5000	Yes
1	US#4[M13]	60.0	0.20	8.00	24.5000	42.5000	Yes
1	US#4[M13]	60.0	0.20	10.00	42.5000	58.1667	Yes
1	US#4[M13]	60.0	0.20	8.00	58.1667	76.1667	Yes
1	US#4[M13]	60.0	0.20	6.00	76.1667	84.1667	Yes
1	US#4[M13]	60.0	0.20	4.00	84.1667	91.1667	Yes
1	US#4[M13]	60.0	0.20	3.00	91.1667	95.1667	Yes
2	US#4[M13]	60.0	0.40	6.00	95.1667	99.1667	Yes
2	US#4[M13]	60.0	0.40	3.00	99.1667	100.4583	Yes

Span:3, Beam:1

PRESTRESSED STEEL:
46 strands, 1/2-270K-LL, Low relaxation strands
Straight Pattern

END PATTERN (Ycg = 6.13 in):

13 @ 3.000 in	13 @ 5.000 in	11 @ 7.000 in	5 @ 9.000 in
1 @ 11.000 in	1 @ 13.000 in	1 @ 15.000 in	1 @ 17.000 in

REINFORCING STEEL:

Tension	steel:	
fy	60.0	ksi
Es	29000	ksi

Stirrups:

# legs	Size	fy (ksi)	Area (in2)	Spacing (in)	Start (ft)	End (ft)	Extends into Deck
2	US#4[M13]	60.0	0.40	3.00	0.2083	1.5000	Yes
2	US#4[M13]	60.0	0.40	6.00	1.5000	5.5000	Yes
1	US#4[M13]	60.0	0.20	3.00	5.5000	9.5000	Yes
1	US#4[M13]	60.0	0.20	4.00	9.5000	16.5000	Yes
1	US#4[M13]	60.0	0.20	6.00	16.5000	24.5000	Yes
1	US#4[M13]	60.0	0.20	8.00	24.5000	42.5000	Yes
1	US#4[M13]	60.0	0.20	10.00	42.5000	58.6667	Yes
1	US#4[M13]	60.0	0.20	8.00	58.6667	76.6667	Yes
1	US#4[M13]	60.0	0.20	6.00	76.6667	84.6667	Yes
1	US#4[M13]	60.0	0.20	4.00	84.6667	91.6667	Yes
1	US#4[M13]	60.0	0.20	3.00	91.6667	95.6667	Yes
2	US#4[M13]	60.0	0.40	6.00	95.6667	99.6667	Yes
2	US#4[M13]	60.0	0.40	3.00	99.6667	100.9583	Yes

Span:3, Beam:2

PRESTRESSED STEEL:
46 strands, 1/2-270K-LL, Low relaxation strands
Straight Pattern

END PATTERN (Ycg = 6.13 in):

13 @ 3.000 in	13 @ 5.000 in	11 @ 7.000 in	5 @ 9.000 in
1 @ 11.000 in	1 @ 13.000 in	1 @ 15.000 in	1 @ 17.000 in

REINFORCING STEEL:

Tension	steel:	
fy	60.0	ksi
Es	29000	ksi

Stirrups:

# legs	Size	fy (ksi)	Area (in2)	Spacing (in)	Start (ft)	End (ft)	Extends into Deck
2	US#4[M13]	60.0	0.40	3.00	0.2083	1.5000	Yes
2	US#4[M13]	60.0	0.40	6.00	1.5000	5.5000	Yes
1	US#4[M13]	60.0	0.20	3.00	5.5000	9.5000	Yes
1	US#4[M13]	60.0	0.20	4.00	9.5000	16.5000	Yes
1	US#4[M13]	60.0	0.20	6.00	16.5000	24.5000	Yes
1	US#4[M13]	60.0	0.20	8.00	24.5000	42.5000	Yes
1	US#4[M13]	60.0	0.20	10.00	42.5000	58.6667	Yes
1	US#4[M13]	60.0	0.20	8.00	58.6667	76.6667	Yes
1	US#4[M13]	60.0	0.20	6.00	76.6667	84.6667	Yes
1	US#4[M13]	60.0	0.20	4.00	84.6667	91.6667	Yes
1	US#4[M13]	60.0	0.20	3.00	91.6667	95.6667	Yes
2	US#4[M13]	60.0	0.40	6.00	95.6667	99.6667	Yes
2	US#4[M13]	60.0	0.40	3.00	99.6667	100.9583	Yes

Span:3, Beam:3

PRESTRESSED STEEL:
46 strands, 1/2-270K-LL, Low relaxation strands
Straight Pattern

END PATTERN (Ycg = 6.13 in):

13 @ 3.000 in	13 @ 5.000 in	11 @ 7.000 in	5 @ 9.000 in
1 @ 11.000 in	1 @ 13.000 in	1 @ 15.000 in	1 @ 17.000 in

REINFORCING STEEL:

Tension	steel:	
fy	60.0	ksi
Es	29000	ksi

Stirrups:

# legs	Size	fy (ksi)	Area (in2)	Spacing (in)	Start (ft)	End (ft)	Extends into Deck
2	US#4[M13]	60.0	0.40	3.00	0.2083	1.5000	Yes
2	US#4[M13]	60.0	0.40	6.00	1.5000	5.5000	Yes
1	US#4[M13]	60.0	0.20	3.00	5.5000	9.5000	Yes
1	US#4[M13]	60.0	0.20	4.00	9.5000	16.5000	Yes
1	US#4[M13]	60.0	0.20	6.00	16.5000	24.5000	Yes
1	US#4[M13]	60.0	0.20	8.00	24.5000	42.5000	Yes
1	US#4[M13]	60.0	0.20	10.00	42.5000	58.6667	Yes
1	US#4[M13]	60.0	0.20	8.00	58.6667	76.6667	Yes
1	US#4[M13]	60.0	0.20	6.00	76.6667	84.6667	Yes
1	US#4[M13]	60.0	0.20	4.00	84.6667	91.6667	Yes
1	US#4[M13]	60.0	0.20	3.00	91.6667	95.6667	Yes
2	US#4[M13]	60.0	0.40	6.00	95.6667	99.6667	Yes
2	US#4[M13]	60.0	0.40	3.00	99.6667	100.9583	Yes

Span:3, Beam:4

PRESTRESSED STEEL:
46 strands, 1/2-270K-LL, Low relaxation strands
Straight Pattern

END PATTERN (Ycg = 6.13 in):

13 @ 3.000 in	13 @ 5.000 in	11 @ 7.000 in	5 @ 9.000 in
1 @ 11.000 in	1 @ 13.000 in	1 @ 15.000 in	1 @ 17.000 in

REINFORCING STEEL:

Tension	steel:	
fy	60.0	ksi
Es	29000	ksi

Stirrups:

# legs	Size	fy (ksi)	Area (in2)	Spacing (in)	Start (ft)	End (ft)	Extends into Deck
2	US#4[M13]	60.0	0.40	3.00	0.2083	1.5000	Yes
2	US#4[M13]	60.0	0.40	6.00	1.5000	5.5000	Yes
1	US#4[M13]	60.0	0.20	3.00	5.5000	9.5000	Yes
1	US#4[M13]	60.0	0.20	4.00	9.5000	16.5000	Yes
1	US#4[M13]	60.0	0.20	6.00	16.5000	24.5000	Yes
1	US#4[M13]	60.0	0.20	8.00	24.5000	42.5000	Yes
1	US#4[M13]	60.0	0.20	10.00	42.5000	58.6667	Yes
1	US#4[M13]	60.0	0.20	8.00	58.6667	76.6667	Yes
1	US#4[M13]	60.0	0.20	6.00	76.6667	84.6667	Yes
1	US#4[M13]	60.0	0.20	4.00	84.6667	91.6667	Yes
1	US#4[M13]	60.0	0.20	3.00	91.6667	95.6667	Yes
2	US#4[M13]	60.0	0.40	6.00	95.6667	99.6667	Yes
2	US#4[M13]	60.0	0.40	3.00	99.6667	100.9583	Yes

f. LEAP Concrete Bridge Output – Span 4, 5 and 6

Bentley				Sheet #	1
				Job #	
Program:	LEAP® Bridge Concrete CONNECT Edition	BASE Consultants		Designed	KV
Module:	Precast/Prestressed Girder	Copyright © Bentley Systems, Inc. 2021		Date	Jan/7/2021
Version:	21.00.00.24	www.bentley.com	Phone: 1-800-778-4277	Checked	RK
File Name:	**Span4-5-6-WB(5ft).lbcx**			Date	Jan/7/2021

CONSOLIDATED FDOT RATING REPORT

Load Rating Summary for Prestressed Concrete Bridges

All Bridge

Design Load Rating - Summary

Limit State	Vehicle	Weight (tons)	LF LL	LF DC	LF DW	Moment DF	Mom or Str RF	Mom or Str Tons	Mom or Str Location	Mom or Str Dim	Controlling Span/Beam	Shear DF	Shear RF	Shear Tons	Shear Location	Shear Dim	Controlling Span/Beam
Strength I (Inv)	HL93 Design Load	-	1.75	1.25	1.50	1.12	1.69	-	0.4L	39.97	1/4	1.11	1.54	-	0.2L	19.73	3/3
Strength I (Op)	HL93 Design Load	-	1.35	1.25	1.50	1.12	2.18	-	0.4L	39.97	1/4	1.11	2.01	-	0.2L	19.73	3/3
Service III (Inv)	HL93 Design Load	-	0.80	1.00	1.00	1.12	1.74	-	0.5L	50.08	1/4	-	-	-	-	-	-
Service III (Op)	HL93 Design Load	-	0.80	1.00	1.00	1.12	1.74	-	0.5L	50.08	1/4	-	-	-	-	-	-

Bentley			Sheet #	2
			Job #	
Program:	LEAP® Bridge Concrete CONNECT Edition	BASE Consultants	Designed	KV
Module:	Precast/Prestressed Girder	Copyright © Bentley Systems, Inc. 2021	Date	Jan/7/2021
Version:	21.00.00.24	www.bentley.com Phone: 1-800-778-4277	Checked	RK
File Name:	**Span4-5-6-WB(5ft).lbcx**		Date	Jan/7/2021

Design Load Rating

Span	Beam	Limit State	Vehicle	Weight (tons)	LF LL	LF DC	LF DW	Moment DF	Mom or Str RF	Mom or Str Tons	Mom or Str Location	Mom or Str Dim	Shear DF	Shear RF	Shear Tons	Shear Location	Shear Dim
1	1	Strength I (Inv)	HL93 Design Load	-	1.75	1.25	1.50	1.03	1.85	-	0.4L	39.97	1.00	1.73	-	0.8L	80.43
1	1	Strength I (Op)	HL93 Design Load	-	1.35	1.25	1.50	1.03	2.39	-	0.4L	39.97	1.00	2.26	-	0.8L	80.43
1	1	Service III (Inv)	HL93 Design Load	-	0.80	1.00	1.00	1.03	1.93	-	0.5L	50.08	-	-	-	-	-
1	1	Service III (Op)	HL93 Design Load	-	0.80	1.00	1.00	1.03	1.93	-	0.5L	50.08	-	-	-	-	-
1	2	Strength I (Inv)	HL93 Design Load	-	1.75	1.25	1.50	0.94	1.98	-	0.4L	39.97	1.10	1.54	-	0.8L	80.43
1	2	Strength I (Op)	HL93 Design Load	-	1.35	1.25	1.50	0.94	2.56	-	0.4L	39.97	1.10	2.02	-	0.8L	80.43
1	2	Service III (Inv)	HL93 Design Load	-	0.80	1.00	1.00	0.94	1.99	-	0.5L	50.08	-	-	-	-	-
1	2	Service III (Op)	HL93 Design Load	-	0.80	1.00	1.00	0.94	1.99	-	0.5L	50.08	-	-	-	-	-
1	3	Strength I (Inv)	HL93 Design Load	-	1.75	1.25	1.50	0.94	1.98	-	0.4L	39.97	1.10	1.54	-	0.8L	80.43
1	3	Strength I (Op)	HL93 Design Load	-	1.35	1.25	1.50	0.94	2.56	-	0.4L	39.97	1.10	2.02	-	0.8L	80.43
1	3	Service III (Inv)	HL93 Design Load	-	0.80	1.00	1.00	0.94	1.99	-	0.5L	50.08	-	-	-	-	-
1	3	Service III (Op)	HL93 Design Load	-	0.80	1.00	1.00	0.94	1.99	-	0.5L	50.08	-	-	-	-	-
1	4	Strength I (Inv)	HL93 Design Load	-	1.75	1.25	1.50	1.12	1.69	-	0.4L	39.97	1.09	1.57	-	0.8L	80.43
1	4	Strength I (Op)	HL93 Design Load	-	1.35	1.25	1.50	1.12	2.18	-	0.4L	39.97	1.09	2.05	-	0.8L	80.43
1	4	Service III (Inv)	HL93 Design Load	-	0.80	1.00	1.00	1.12	1.74	-	0.5L	50.08	-	-	-	-	-

Bentley			Sheet #	3
			Job #	
Program:	LEAP® Bridge Concrete CONNECT Edition	BASE Consultants	Designed	KV
Module:	Precast/Prestressed Girder	Copyright © Bentley Systems, Inc. 2021	Date	Jan/7/2021
Version:	21.00.00.24	www.bentley.com Phone: 1-800-778-4277	Checked	RK
File Name:	**Span4-5-6-WB(5ft).lbcx**		Date	Jan/7/2021

Span	Beam	Limit State	Vehicle	Weight (tons)	LF LL	LF DC	LF DW	Moment DF	Mom or Str RF	Mom or Str Tons	Mom or Str Location	Mom or Str Dim	Shear DF	Shear RF	Shear Tons	Shear Location	Shear Dim
1	4	Service III (Op)	HL93 Design Load	-	0.80	1.00	1.00	1.12	1.74	-	0.5L	50.08	-	-	-	-	-
2	1	Strength I (Inv)	HL93 Design Load	-	1.75	1.25	1.50	1.04	2.37	-	0.5L	49.83	1.01	1.88	-	Critical	6.35
2	1	Strength I (Op)	HL93 Design Load	-	1.35	1.25	1.50	1.04	3.08	-	0.5L	49.83	1.01	2.45	-	Critical	6.35
2	1	Service III (Inv)	HL93 Design Load	-	0.80	1.00	1.00	1.04	2.51	-	0.5L	49.83	-	-	-	-	-
2	1	Service III (Op)	HL93 Design Load	-	0.80	1.00	1.00	1.04	2.51	-	0.5L	49.83	-	-	-	-	-
2	2	Strength I (Inv)	HL93 Design Load	-	1.75	1.25	1.50	0.94	2.55	-	0.5L	49.83	1.10	1.68	-	Critical	6.36
2	2	Strength I (Op)	HL93 Design Load	-	1.35	1.25	1.50	0.94	3.30	-	0.5L	49.83	1.10	2.19	-	Critical	6.36
2	2	Service III (Inv)	HL93 Design Load	-	0.80	1.00	1.00	0.94	2.60	-	0.5L	49.83	-	-	-	-	-
2	2	Service III (Op)	HL93 Design Load	-	0.80	1.00	1.00	0.94	2.60	-	0.5L	49.83	-	-	-	-	-
2	3	Strength I (Inv)	HL93 Design Load	-	1.75	1.25	1.50	0.94	2.55	-	0.5L	49.83	1.10	1.68	-	Critical	6.36
2	3	Strength I (Op)	HL93 Design Load	-	1.35	1.25	1.50	0.94	3.30	-	0.5L	49.83	1.10	2.19	-	Critical	6.36
2	3	Service III (Inv)	HL93 Design Load	-	0.80	1.00	1.00	0.94	2.60	-	0.5L	49.83	-	-	-	-	-
2	3	Service III (Op)	HL93 Design Load	-	0.80	1.00	1.00	0.94	2.60	-	0.5L	49.83	-	-	-	-	-
2	4	Strength I (Inv)	HL93 Design Load	-	1.75	1.25	1.50	1.12	2.17	-	0.5L	49.83	1.09	1.71	-	Critical	6.35
2	4	Strength I (Op)	HL93 Design Load	-	1.35	1.25	1.50	1.12	2.81	-	0.5L	49.83	1.09	2.23	-	Critical	6.35
2	4	Service III	HL93 Design	-	0.80	1.00	1.00	1.12	2.26	-	0.5L	49.83	-	-	-	-	-

Bentley			Sheet #	4
			Job #	
Program:	LEAP® Bridge Concrete CONNECT Edition	BASE Consultants	Designed	KV
Module:	Precast/Prestressed Girder	Copyright © Bentley Systems, Inc. 2021	Date	Jan/7/2021
Version:	21.00.00.24	www.bentley.com Phone: 1-800-778-4277	Checked	RK
File Name:	**Span4-5-6-WB(5ft).lbcx**		Date	Jan/7/2021

Span	Beam	Limit State	Vehicle	Weight (tons)	LF LL	LF DC	LF DW	Moment DF	Mom or Str RF	Mom or Str Tons	Mom or Str Location	Mom or Str Dim	Shear DF	Shear RF	Shear Tons	Shear Location	Shear Dim
2	4	(Inv) Service III (Op)	Load HL93 Design Load	-	0.80	1.00	1.00	1.12	2.26	-	0.5L	49.83	-	-	-	-	-
3	1	Strength I (Inv)	HL93 Design Load	-	1.75	1.25	1.50	1.03	1.85	-	0.6L	60.20	1.01	1.72	-	0.2L	19.73
3	1	Strength I (Op)	HL93 Design Load	-	1.35	1.25	1.50	1.03	2.39	-	0.6L	60.20	1.01	2.25	-	0.2L	19.73
3	1	Service III (Inv)	HL93 Design Load	-	0.80	1.00	1.00	1.03	1.93	-	0.5L	50.08	-	-	-	-	-
3	1	Service III (Op)	HL93 Design Load	-	0.80	1.00	1.00	1.03	1.93	-	0.5L	50.08	-	-	-	-	-
3	2	Strength I (Inv)	HL93 Design Load	-	1.75	1.25	1.50	0.94	1.98	-	0.6L	60.20	1.11	1.54	-	0.2L	19.73
3	2	Strength I (Op)	HL93 Design Load	-	1.35	1.25	1.50	0.94	2.56	-	0.6L	60.20	1.11	2.01	-	0.2L	19.73
3	2	Service III (Inv)	HL93 Design Load	-	0.80	1.00	1.00	0.94	1.99	-	0.5L	50.08	-	-	-	-	-
3	2	Service III (Op)	HL93 Design Load	-	0.80	1.00	1.00	0.94	1.99	-	0.5L	50.08	-	-	-	-	-
3	3	Strength I (Inv)	HL93 Design Load	-	1.75	1.25	1.50	0.94	1.98	-	0.6L	60.20	1.11	1.54	-	0.2L	19.73
3	3	Strength I (Op)	HL93 Design Load	-	1.35	1.25	1.50	0.94	2.56	-	0.6L	60.20	1.11	2.01	-	0.2L	19.73
3	3	Service III (Inv)	HL93 Design Load	-	0.80	1.00	1.00	0.94	1.99	-	0.5L	50.08	-	-	-	-	-
3	3	Service III (Op)	HL93 Design Load	-	0.80	1.00	1.00	0.94	1.99	-	0.5L	50.08	-	-	-	-	-
3	4	Strength I (Inv)	HL93 Design Load	-	1.75	1.25	1.50	1.12	1.69	-	0.6L	60.20	1.09	1.56	-	0.2L	19.73
3	4	Strength I (Op)	HL93 Design Load	-	1.35	1.25	1.50	1.12	2.18	-	0.6L	60.20	1.09	2.05	-	0.2L	19.73

Span	Beam	Limit State	Vehicle	Weight (tons)	LF LL	LF DC	LF DW	Moment DF	Mom or Str RF	Mom or Str Tons	Mom or Str Location	Mom or Str Dim	Shear DF	Shear RF	Shear Tons	Shear Location	Shear Dim
3	4	Service III (Inv)	HL93 Design Load	-	0.80	1.00	1.00	1.12	1.74	-	0.5L	50.08	-	-	-	-	-
3	4	Service III (Op)	HL93 Design Load	-	0.80	1.00	1.00	1.12	1.74	-	0.5L	50.08	-	-	-	-	-

Permit Load Rating - Summary

Limit State	Vehicle	Weight (tons)	LF LL	LF DC	LF DW	Moment DF	Mom or Str RF	Mom or Str Tons	Mom or Str Location	Mom or Str Dim	Controlling Span/Beam	Shear DF	Shear RF	Shear Tons	Shear Location	Shear Dim	Controlling Span/Beam
Strength II	FL120	60.00	1.30	1.25	1.50	1.12	1.91	114.52	0.4L	39.97	1/4	1.11	1.70	102.18	0.2L	19.73	3/2
Service I	FL120	60.00	1.00	1.00	1.00	1.12	1.93	115.96	0.5L	50.08	1/4	-	-	-	-	-	-

Bentley			Sheet #	6
			Job #	
Program:	LEAP® Bridge Concrete CONNECT Edition	BASE Consultants	Designed	KV
Module:	Precast/Prestressed Girder	Copyright © Bentley Systems, Inc. 2021	Date	Jan/7/2021
Version:	21.00.00.24	www.bentley.com Phone: 1-800-778-4277	Checked	RK
File Name:	**Span4-5-6-WB(5ft).lbcx**		Date	Jan/7/2021

Permit Load Rating

Span	Beam	Limit State	Vehicle	Weight (tons)	LF LL	LF DC	LF DW	Moment DF	Mom or Str RF	Mom or Str Tons	Mom or Str Location	Mom or Str Dim	Shear DF	Shear RF	Shear Tons	Shear Location	Shear Dim
1	1	Strength II	FL120	60.00	1.30	1.25	1.50	1.03	2.09	125.43	0.4L	39.97	1.00	1.92	114.94	0.8L	80.43
1	1	Service I	FL120	60.00	1.00	1.00	1.00	1.03	2.08	124.97	0.5L	50.08	-	-	-	-	-
1	2	Strength II	FL120	60.00	1.30	1.25	1.50	0.94	2.24	134.43	0.4L	39.97	1.10	1.71	102.58	0.8L	80.43
1	2	Service I	FL120	60.00	1.00	1.00	1.00	0.94	2.10	126.04	0.5L	50.08	-	-	-	-	-
1	3	Strength II	FL120	60.00	1.30	1.25	1.50	0.94	2.24	134.43	0.4L	39.97	1.10	1.71	102.58	0.8L	80.43
1	3	Service I	FL120	60.00	1.00	1.00	1.00	0.94	2.10	126.04	0.5L	50.08	-	-	-	-	-
1	4	Strength II	FL120	60.00	1.30	1.25	1.50	1.12	1.91	114.52	0.4L	39.97	1.09	1.74	104.22	0.8L	80.43
1	4	Service I	FL120	60.00	1.00	1.00	1.00	1.12	1.93	115.96	0.5L	50.08	-	-	-	-	-
2	1	Strength II	FL120	60.00	1.30	1.25	1.50	1.04	2.62	157.01	0.5L	49.83	1.01	2.15	129.27	0.2L	19.63
2	1	Service I	FL120	60.00	1.00	1.00	1.00	1.04	2.49	149.47	0.5L	49.83	-	-	-	-	-
2	2	Strength II	FL120	60.00	1.30	1.25	1.50	0.94	2.81	168.30	0.5L	49.83	1.10	1.92	115.44	0.2L	19.63
2	2	Service I	FL120	60.00	1.00	1.00	1.00	0.94	2.49	149.50	0.5L	49.83	-	-	-	-	-
2	3	Strength II	FL120	60.00	1.30	1.25	1.50	0.94	2.81	168.30	0.5L	49.83	1.10	1.92	115.44	0.2L	19.63
2	3	Service I	FL120	60.00	1.00	1.00	1.00	0.94	2.49	149.50	0.5L	49.83	-	-	-	-	-
2	4	Strength II	FL120	60.00	1.30	1.25	1.50	1.12	2.39	143.35	0.5L	49.83	1.09	1.95	117.25	0.2L	19.63
2	4	Service I	FL120	60.00	1.00	1.00	1.00	1.12	2.30	137.96	0.5L	49.83	-	-	-	-	-
3	1	Strength II	FL120	60.00	1.30	1.25	1.50	1.03	2.09	125.43	0.6L	60.20	1.01	1.91	114.49	0.2L	19.73
3	1	Service I	FL120	60.00	1.00	1.00	1.00	1.03	2.08	124.97	0.5L	50.08	-	-	-	-	-
3	2	Strength II	FL120	60.00	1.30	1.25	1.50	0.94	2.24	134.44	0.6L	60.20	1.11	1.70	102.18	0.2L	19.73
3	2	Service I	FL120	60.00	1.00	1.00	1.00	0.94	2.10	126.04	0.5L	50.08	-	-	-	-	-

Span	Beam	Limit State	Vehicle	Weight (tons)	LF LL	LF DC	LF DW	Moment DF	Mom or Str RF	Mom or Str Tons	Mom or Str Location	Mom or Str Dim	Shear DF	Shear RF	Shear Tons	Shear Location	Shear Dim
3	3	Strength II	FL120	60.00	1.30	1.25	1.50	0.94	2.24	134.44	0.6L	60.20	1.11	1.70	102.18	0.2L	19.73
3	3	Service I	FL120	60.00	1.00	1.00	1.00	0.94	2.10	126.04	0.5L	50.08	-	-	-	-	-
3	4	Strength II	FL120	60.00	1.30	1.25	1.50	1.12	1.91	114.52	0.6L	60.20	1.09	1.73	103.81	0.2L	19.73
3	4	Service I	FL120	60.00	1.00	1.00	1.00	1.12	1.93	115.96	0.5L	50.08	-	-	-	-	-

SR 414 Over Little Wekiva River (Existing Bridge No. 770075)

The existing SR 414 Over Little Wekiva River bridge consists of a 69’-0” long single span structure with AASHTO Type IV Prestressed Concrete Beams. Total deck width is 121’-0” accommodating two 11’-0” lanes, a 13’-6” wide interior lane, 8’-0” wide exterior shoulders, a 5’-0” wide barrier separating the side walk in each direction, and a 19’-0” wide raised median. The proposed modifications incorporate a barrier along the 6’-0” inside shoulder in each direction to protect the proposed viaduct piers in the median with no other structural changes. This eliminates any live loading on the inside 32’-0” portion of the existing structure; the structural changes are minor and by inspection this structure does not require a new rating for this phase.

SR 414 Over SR 434 (Existing Bridge No. 770083)

The existing SR 414 Over SR 434 consists of a 245’-0” long single-span steel plate girder structure that is 117’-1” wide consisting of an 8” thick cast-in-place concrete deck and a 19’-0” wide raised median. The proposed typical cross section would remove the raised median and provide a barrier separating the eastbound and westbound lanes. This reduces the overall superimposed deadload on the existing structure and therefore does not adversely affect the load rating of existing structure.

Appendix E
Calculations and Cost Backup Data

Appendix E Calculations and Backup Data

1. **Vertical Clearance Calculations**
    a. **Pier 1 to Pier 26 (Jacobs)**
    b. **Pier 26 to Pier 58 (BASE)**
2. **Conceptual Substructure Analysis**
3. **Cost Estimate Data**

CLIENT:	CFX	ID:	PROJECT NO.:	EGXL6300	
PROJECT:	SR 414		MADE BY:	YT	10/29/20
STRUCTURE:	Segmental Structure		CHECKED BY:	SA	11/16/20
SUBJECT:	Geometry		SHEET NO.:	1/ 1	

MINIMUM VERTICAL CLEARANCE

OVERVIEW

Determine the minimum vertical clearance for the Segmental Alternative over the two points of interests per Figure 260.6.5 of the Florida Design Manual (FDM):

Figure 260.6.5 Curbed Roadway with Traffic Barrier

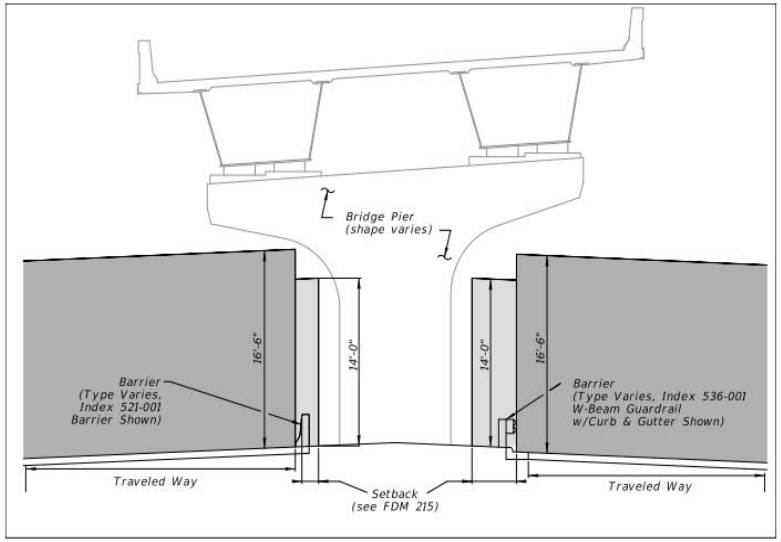

1) 16.5'
2) 14.0'

ASSUMPTIONS

1) There are sections along the roadway below with turn lanes that are within the inside travel lane. It is assumed that the roadway continues to slope upward to the edge of this lane.

2) For the 14.0' vertical clearance check, the section of the roadway below conservatively assumes the barriers are placed adjacent to the column.

3) The existing and/or proposed curb and gutter in the median is assumed to be Type F. Therefore, the max. curb height = 1'-0" - 6" min. = 6" (See FDOT Index 520-001).

CLIENT:	CFX	ID:	PROJECT NO.:	EGXL6300	
PROJECT:	SR 414		MADE BY:	YT	10/29/20
STRUCTURE:	Segmental Structure - Normal Crown		CHECKED BY:	SA	11/16/20
SUBJECT:	Geometry - 16.5' MVC at Piers		SHEET NO.:	1/ 2	

MINIMUM VERTICAL CLEARANCE

DEFINITIONS

data	= User Input
data	= Calculated Value
data	= Emphasized Calculated Value

PROFILE: "BL_SR414_P" *(See Attached COGO)*

Curve 1	STA.	El.	Grade
VPT1	1477+25.00	124.8619	3.7000%
VPC1	1480+50.00	136.8869	3.7000%
VPI	1485+50.00	155.3869	-
VPT2	1490+50.00	153.8866	-0.3001%
VPC2	1513+60.00	146.9554	-0.3001%

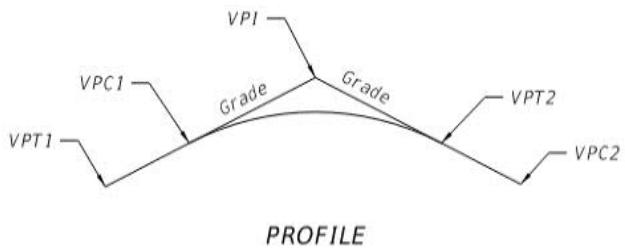

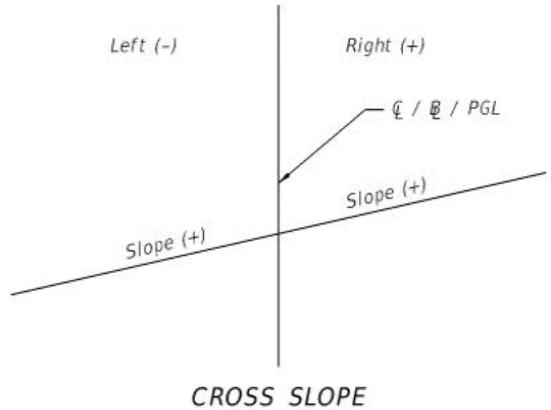

Rate of Change = -0.000040 %/STA. = *(VPT2 Grade - VPC1 Grade) / (VPT2 STA. - VPC1 STA.)*

Curve 2	STA.	El.	Grade
VPT1			
VPC1	1513+60.00	146.9554	-0.3001%
VPI	1518+60.00	145.4551	-
VPT2	1523+60.00	133.4551	-2.4000%
VPC2	1525+50.00	128.8951	-2.4000%

Rate of Change = -0.000021 %/STA. = *(VPT2 Grade - VPC1 Grade) / (VPT2 STA. - VPC1 STA.)*

Curve 3	STA.	El.	Grade
VPT1			
VPC1	1525+50.00	128.8951	-2.4000%
VPI	1529+50.00	119.2951	-
VPT2	1533+50.00	120.4951	0.3000%
VPC2	1553+00.00	126.3451	0.3000%

Rate of Change = 0.000034 %/STA. = *(VPT2 Grade - VPC1 Grade) / (VPT2 STA. - VPC1 STA.)*

Curve 4	STA.	El.	Grade
VPT1			
VPC1	1553+00.00	126.3451	0.3000%
VPI	1558+00.00	127.8451	-
VPT2	1563+00.00	124.0309	-0.7628%
VPC2	1574+50.00	115.2584	-0.7628%

Rate of Change = -0.000011 %/STA. = *(VPT2 Grade - VPC1 Grade) / (VPT2 STA. - VPC1 STA.)*

Curve 5	STA.	El.	Grade
VPT1			
VPC1	1574+50.00	115.2584	-0.7628%
VPI	1578+50.00	112.2071	-
VPT2	1582+50.00	116.9559	1.1872%
VPC2	1584+35.00	119.1521	1.1872%

Rate of Change = 0.000024 %/STA. = *(VPT2 Grade - VPC1 Grade) / (VPT2 STA. - VPC1 STA.)*

Superstructure Depth =	9.0000	ft
Bearing Depth =	1.0000	ft, *Assumed.*
Cap Depth 1 =	5.0000	ft
Cap Slope 2 =	0.4444	ft/ft = *(8'-0") / [(61'-4" - 25'-4")/2].*
Distance to MVC =	11.6667	ft
Cap Depth 2 =	5.1852	ft = *Distance to MVC * Cap Slope.*

Structure Depth 1 =	9.0000	ft = *For approach/end spans = Superstructure Depth.*
Structure Depth 2 =	20.1852	ft = *Superstructure Depth + Bearing Depth + Cap Depth 1 + Cap Depth 2.*
Structure Depth at Pier 10/11 =	22.6852	ft = *Structure Depth 2 + (11.5' Haunched Section - Structure Depth 1).*

CLIENT:	CFX	ID:	PROJECT NO.:	EGXL6300	
PROJECT:	SR 414		MADE BY:	YT	10/29/20
STRUCTURE:	Segmental Structure - Normal Crown		CHECKED BY:	SA	11/16/20
SUBJECT:	Geometry - 16.5' MVC at Piers		SHEET NO.:	2/ 2	

MINIMUM VERTICAL CLEARANCE

Curve	Span No.	Span Length (ft)	Location	PGL Geometry STA.	PGL Geometry El.	Deck Geometry C.S.*	Deck Geometry Offset (ft)	Deck Geometry Deck El.	Structure Depth (ft)	Low Chord El.	Exist. Rdwy El. Below	MVC Provided (ft)	MVC Required (ft)	MVC Met?	Add'l VC Needed
Curve 1	0	0.00	Begin	1481+10.50	139.052	2.000%	-19.0000	138.672	9.000	129.672	106.117	23.555	0.000	Yes	-
	1	123.83	Pier 2	1482+34.33	143.028	2.000%	-19.0000	142.648	9.000	133.648	107.261	26.386	16.500	Yes	-
	2	123.83	Pier 3	1483+58.17	146.390	2.000%	-19.0000	146.010	20.185	125.825	107.786	18.039	16.500	Yes	-
	3	123.83	Pier 4	1484+82.00	149.138	2.000%	-19.0000	148.758	20.185	128.573	108.330	20.243	16.500	Yes	-
	4	148.00	Pier 5	1486+30.00	151.619	2.000%	-19.0000	151.239	20.185	131.054	108.835	22.218	16.500	Yes	-
	5	148.00	Pier 6	1487+78.00	153.223	2.000%	-19.0000	152.843	20.185	132.658	109.060	23.597	16.500	Yes	-
	6	148.00	Pier 7	1489+26.00	153.951	2.000%	-19.0000	153.571	20.185	133.386	108.557	24.829	16.500	Yes	-
	7	148.00	Pier 8	1490+74.00	153.815	2.000%	-19.0000	153.435	20.185	133.249	108.115	25.135	16.500	Yes	-
	8	148.00	Pier 9	1492+22.00	153.370	2.000%	-19.0000	152.990	20.185	132.805	107.709	25.096	16.500	Yes	-
	9	138.00	Pier 10	1493+60.00	152.956	2.000%	-19.0000	152.576	22.685	129.891	107.321	22.570	16.500	Yes	-
	10	230.00	Pier 11	1495+90.00	152.266	2.000%	-19.0000	151.886	22.685	129.201	107.312	21.889	16.500	Yes	-
	11	138.00	Pier 12	1497+28.00	151.852	2.000%	-19.0000	151.472	20.185	131.287	107.729	23.558	16.500	Yes	-
	12	148.00	Pier 13	1498+76.00	151.408	2.000%	-19.0000	151.028	20.185	130.843	107.454	23.388	16.500	Yes	-
	13	148.00	Pier 14	1500+24.00	150.964	2.000%	-19.0000	150.584	20.185	130.398	107.030	23.368	16.500	Yes	-
	14	148.00	Pier 15	1501+72.00	150.519	2.000%	-19.0000	150.139	20.185	129.954	106.365	23.589	16.500	Yes	-
	15	148.00	Pier 16	1503+20.00	150.075	2.000%	-19.0000	149.695	20.185	129.510	105.921	23.589	16.500	Yes	-
	16	148.00	Pier 17	1504+68.00	149.631	2.000%	-19.0000	149.251	20.185	129.066	105.476	23.590	16.500	Yes	-
	17	148.00	Pier 18	1506+16.00	149.187	2.000%	-19.0000	148.807	20.185	128.622	105.728	22.894	16.500	Yes	-
	18	148.00	Pier 19	1507+64.00	148.743	2.000%	-19.0000	148.363	20.185	128.178	105.494	22.684	16.500	Yes	-
	19	148.00	Pier 20	1509+12.00	148.299	2.000%	-19.0000	147.919	20.185	127.734	103.877	23.857	16.500	Yes	-
	20	148.00	Pier 21	1510+60.00	147.855	2.000%	-19.0000	147.475	20.185	127.289	101.818	25.472	16.500	Yes	-
	21	148.00	Pier 22	1512+08.00	147.410	2.000%	-19.0000	147.030	20.185	126.845	99.771	27.074	16.500	Yes	-
	22	148.00	Pier 23	1513+56.00	146.966	2.000%	-19.0000	146.586	20.185	126.401	98.151	28.250	16.500	Yes	-
Curve 2	23	148.00	Pier 24	1515+04.00	146.306	2.000%	-19.0000	145.926	20.185	125.740	96.321	29.420	16.500	Yes	-
	24	148.00	Pier 25	1516+52.00	145.184	2.000%	-19.0000	144.804	20.185	124.619	94.486	30.133	16.500	Yes	-
	25	148.00	Pier 26	1518+00.00	143.602	2.000%	-19.0000	143.222	20.185	123.037	92.997	30.040	16.500	Yes	-

**Normal Crown Section*

CLIENT:	CFX	ID:	PROJECT NO.:	EGXL6300	
PROJECT:	SR 414		MADE BY:	YT	10/29/20
STRUCTURE:	Segmental Structure - Superelevated at 6.5%		CHECKED BY:	SA	11/16/20
SUBJECT:	Geometry - 16.5' MVC at Piers		SHEET NO.:	1/ 2	

MINIMUM VERTICAL CLEARANCE

DEFINITIONS

data	= User Input
data	= Calculated Value
data	= Emphasized Calculated Value

PROFILE: "BL_SR414_P" *(See Attached COGO)*

Curve 1	STA.	El.	Grade
VPT1	1477+25.00	124.8619	3.7000%
VPC1	1480+50.00	136.8869	3.7000%
VPI	1485+50.00	155.3869	-
VPT2	1490+50.00	153.8866	-0.3001%
VPC2	1513+60.00	146.9554	-0.3001%

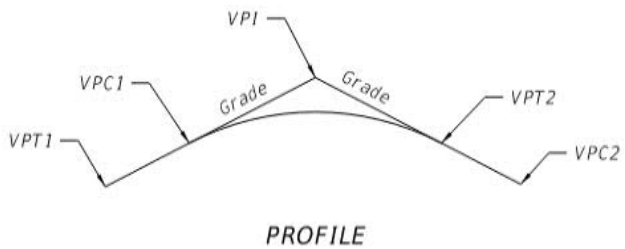

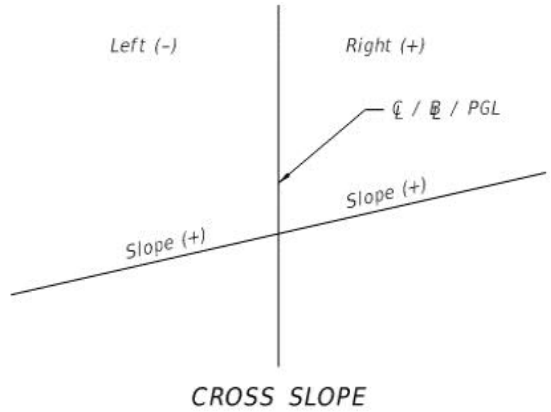

Rate of Change = -0.000040 %/STA. = *(VPT2 Grade - VPC1 Grade) / (VPT2 STA. - VPC1 STA.)*

Curve 2	STA.	El.	Grade
VPT1			
VPC1	1513+60.00	146.9554	-0.3001%
VPI	1518+60.00	145.4551	-
VPT2	1523+60.00	133.4551	-2.4000%
VPC2	1525+50.00	128.8951	-2.4000%

Rate of Change = -0.000021 %/STA. = *(VPT2 Grade - VPC1 Grade) / (VPT2 STA. - VPC1 STA.)*

Curve 3	STA.	El.	Grade
VPT1			
VPC1	1525+50.00	128.8951	-2.4000%
VPI	1529+50.00	119.2951	-
VPT2	1533+50.00	120.4951	0.3000%
VPC2	1553+00.00	126.3451	0.3000%

Rate of Change = 0.000034 %/STA. = *(VPT2 Grade - VPC1 Grade) / (VPT2 STA. - VPC1 STA.)*

Curve 4	STA.	El.	Grade
VPT1			
VPC1	1553+00.00	126.3451	0.3000%
VPI	1558+00.00	127.8451	-
VPT2	1563+00.00	124.0309	-0.7628%
VPC2	1574+50.00	115.2584	-0.7628%

Rate of Change = -0.000011 %/STA. = *(VPT2 Grade - VPC1 Grade) / (VPT2 STA. - VPC1 STA.)*

Curve 5	STA.	El.	Grade
VPT1			
VPC1	*1574+50.00*	*115.2584*	*-0.7628%*
VPI	*1578+50.00*	*112.2071*	-
VPT2	*1582+50.00*	*116.9559*	*1.1872%*
VPC2	*1584+35.00*	*119.1521*	*1.1872%*

Rate of Change = 0.000024 %/STA. = *(VPT2 Grade - VPC1 Grade) / (VPT2 STA. - VPC1 STA.)*

Superstructure Depth =	*9.0000*	ft
Bearing Depth =	*1.0000*	ft, *Assumed.*
Cap Depth 1 =	*5.0000*	ft
Cap Slope 2 =	*0.4444*	ft/ft = *(8'-0") / [(61'-4" - 25'-4")/2].*
Distance to MVC =	*11.6667*	ft
Cap Depth 2 =	5.1852	ft = *Distance to MVC * Cap Slope.*

Structure Depth 1 =	9.0000	ft = *For approach/end spans = Superstructure Depth.*
Structure Depth 2 =	20.1852	ft = *Superstructure Depth + Bearing Depth + Cap Depth 1 + Cap Depth 2.*
Structure Depth at Pier 10/11 =	22.6852	ft = *Structure Depth 2 + (11.5' Haunched Section - Structure Depth 1).*

CLIENT: CFX ID:

PROJECT: SR 414

STRUCTURE: Segmental Structure - Superelevated at 6.5%

SUBJECT: Geometry - 16.5' MVC at Piers

PROJECT NO.: EGXL6300

MADE BY: YT 10/29/20

CHECKED BY: SA 11/16/20

SHEET NO.: 2/ 2

MINIMUM VERTICAL CLEARANCE

Curve	Span No.	Span Length (ft)	Location	PGL Geometry STA.	PGL Geometry El.	Deck Geometry C.S.*	Deck Geometry Offset (ft)	Deck Geometry Deck El.	Structure Depth (ft)	Low Chord El.	Exist. Rdwy El. Below	MVC Provided (ft)	MVC Required (ft)	MVC Met?	Add'l VC Needed
Curve 1	0	0.00	Begin	1481+10.50	139.052	-6.500%	19.0000	137.817	9.000	128.817	106.117	22.700	0.000	Yes	-
	1	123.83	Pier 2	1482+34.33	143.028	-6.500%	19.0000	141.793	9.000	132.793	107.261	25.531	0.000	Yes	-
	2	123.83	Pier 3	1483+58.17	146.390	-6.500%	19.0000	145.155	20.185	124.970	107.786	17.184	16.500	Yes	-
	3	123.83	Pier 4	1484+82.00	149.138	-6.500%	19.0000	147.903	20.185	127.718	108.330	19.388	16.500	Yes	-
	4	148.00	Pier 5	1486+30.00	151.619	-6.500%	19.0000	150.384	20.185	130.199	108.835	21.363	16.500	Yes	-
	5	148.00	Pier 6	1487+78.00	153.223	-6.500%	19.0000	151.988	20.185	131.803	109.060	22.742	16.500	Yes	-
	6	148.00	Pier 7	1489+26.00	153.951	-6.500%	19.0000	152.716	20.185	132.531	108.557	23.974	16.500	Yes	-
	7	148.00	Pier 8	1490+74.00	153.815	-6.500%	19.0000	152.580	20.185	132.394	108.115	24.280	16.500	Yes	-
	8	148.00	Pier 9	1492+22.00	153.370	-6.500%	19.0000	152.135	20.185	131.950	107.709	24.241	16.500	Yes	-
	9	138.00	Pier 10	1493+60.00	152.956	-6.500%	19.0000	151.721	22.685	129.036	107.321	21.715	16.500	Yes	-
	10	230.00	Pier 11	1495+90.00	152.266	-6.500%	19.0000	151.031	22.685	128.346	107.312	21.034	16.500	Yes	-
	11	138.00	Pier 12	1497+28.00	151.852	-6.500%	19.0000	150.617	20.185	130.432	107.729	22.703	16.500	Yes	-
	12	148.00	Pier 13	1498+76.00	151.408	-6.500%	19.0000	150.173	20.185	129.988	107.454	22.533	16.500	Yes	-
	13	148.00	Pier 14	1500+24.00	150.964	-6.500%	19.0000	149.729	20.185	129.543	107.030	22.513	16.500	Yes	-
	14	148.00	Pier 15	1501+72.00	150.519	-6.500%	19.0000	149.284	20.185	129.099	106.365	22.734	16.500	Yes	-
	15	148.00	Pier 16	1503+20.00	150.075	-6.500%	19.0000	148.840	20.185	128.655	105.921	22.734	16.500	Yes	-
	16	148.00	Pier 17	1504+68.00	149.631	-6.500%	19.0000	148.396	20.185	128.211	105.476	22.735	16.500	Yes	-
	17	148.00	Pier 18	1506+16.00	149.187	-6.500%	19.0000	147.952	20.185	127.767	105.728	22.039	16.500	Yes	-
	18	148.00	Pier 19	1507+64.00	148.743	-6.500%	19.0000	147.508	20.185	127.323	105.494	21.829	16.500	Yes	-
	19	148.00	Pier 20	1509+12.00	148.299	-6.500%	19.0000	147.064	20.185	126.879	103.877	23.002	16.500	Yes	-
	20	148.00	Pier 21	1510+60.00	147.855	-6.500%	19.0000	146.620	20.185	126.434	101.818	24.617	16.500	Yes	-
	21	148.00	Pier 22	1512+08.00	147.410	-6.500%	19.0000	146.175	20.185	125.990	99.771	26.219	16.500	Yes	-
	22	148.00	Pier 23	1513+56.00	146.966	-6.500%	19.0000	145.731	20.185	125.546	98.151	27.395	16.500	Yes	-
Curve 2	23	148.00	Pier 24	1515+04.00	146.306	-6.500%	19.0000	145.071	20.185	124.885	96.321	28.565	16.500	Yes	-
	24	148.00	Pier 25	1516+52.00	145.184	-6.500%	19.0000	143.949	20.185	123.764	94.486	29.278	16.500	Yes	-
	25	148.00	Pier 26	1518+00.00	143.602	-6.500%	19.0000	142.367	20.185	122.182	92.997	29.185	16.500	Yes	-

**Superelevated Section*

CLIENT:	CFX	ID:	PROJECT NO.:	EGXL6300	
PROJECT:	SR 414		MADE BY:	YT	10/29/20
STRUCTURE:	Segmental Structure		CHECKED BY:	SA	11/16/20
SUBJECT:	Geometry - 16.5' MVC at Piers		SHEET NO.:	1/ 3	

MINIMUM VERTICAL CLEARANCE

DEFINITIONS

data	= User Input
data	= Calculated Value
data	= Emphasized Calculated Value

PROFILE: "EX_SR414_P2" *(See Attached COGO)*

	STA.	El.	Grade	Location & STA.	PGL El.	Exist. Roadway Lane C.S.	Offset (ft)			EOTL El.				
VPI	1481+09.74	106.2698		Begin										
VPI	1481+14.74	106.3171	0.9488%	1481+10.50	106.277	2.000%	-8.0000			106.117	Conservative	EOTL is	-45.9641	outside of exist. PGL
VPI														
VPI	1482+29.58	107.3850		Pier 2										
VPI	1482+34.57	107.4231	0.7631%	1482+34.33	107.421	2.000%	-8.0000			107.261	Conservative	EOTL is	-30.5714	outside of exist. PGL
VPI														
VPI	1483+54.41	107.9343		Pier 3										
VPI	1483+59.40	107.9493	0.3004%	1483+58.17	107.946	2.000%	-8.0000			107.786	Conservative	EOTL is	-10.8629	outside of exist. PGL
VPI														
VPI	1484+79.24	108.3093		Pier 4										
VPI	1484+84.23	108.3243	0.3004%	1484+82.00	108.318	2.000%	0.6171			108.330				
VPI														
VPI	1486+29.17	108.7593		Pier 5										
VPI	1486+34.21	108.7743	0.2980%	1486+30.00	108.762	2.000%	3.6747			108.835				
VPI														
VPI	1487+75.02	109.0655		Pier 6										
VPI	1487+80.04	109.0505	-0.2992%	1487+78.00	109.057	2.000%	0.1911			109.060				
VPI														
VPI	1489+25.60	108.6145		Pier 7										
VPI	1489+30.62	108.5995	-0.2998%	1489+26.00	108.613	2.000%	-2.8035			108.557				
VPI														
VPI	1490+70.93	108.1785		Pier 8										
VPI	1490+75.94	108.1635	-0.3002%	1490+74.00	108.169	2.000%	-2.7211			108.115				
VPI														
VPI	1492+21.08	107.7275		Pier 9										
VPI	1492+26.08	107.7124	-0.3006%	1492+22.00	107.725	2.000%	-0.7799			107.709				
VPI														
VPI	1493+66.08	107.2915		Pier 10										
VPI	1493+71.07	107.2764	-0.3008%	1493+60.00	107.310	2.000%	0.5692			107.321				

CLIENT:	CFX	ID:	PROJECT NO.:	EGXL6300	
PROJECT:	SR 414		MADE BY:	YT	10/29/20
STRUCTURE:	Segmental Structure		CHECKED BY:	SA	11/16/20
SUBJECT:	Geometry - 16.5' MVC at Piers		SHEET NO.:	2/ 3	

MINIMUM VERTICAL CLEARANCE

	STA.	El.	Grade	Location & STA.	PGL El.	Exist. Roadway Shldr C.S.	Offset (ft)			EOTL El.	
VPI	1495+15.98	107.0600		Pier 11							
VPI	1495+20.97	107.0751	0.3021%	1495+90.00	107.284	2.000%	1.4096			107.312	
VPI											
VPI	1497+25.77	107.6938		Pier 12							
VPI	1497+30.77	107.7089	0.3021%	1497+28.00	107.701	2.000%	1.4138			107.729	
VPI											
VPI	1498+75.65	107.4155		Pier 13							
VPI	1498+80.65	107.4005	-0.3004%	1498+76.00	107.414	2.000%	1.9961			107.454	
VPI											
VPI	1500+20.60	106.9802		Pier 14							
VPI	1500+25.60	106.9651	-0.3004%	1500+24.00	106.970	2.000%	3.0000			107.030	Turn Lane
VPI											
VPI	1501+70.60	106.5296		Pier 15							
VPI	1501+75.60	106.5145	-0.3004%	1501+72.00	106.525	2.000%	-8.0000			106.365	
VPI											
VPI	1503+15.60	106.0940		Pier 16							
VPI	1503+20.60	106.0790	-0.3004%	1503+20.00	106.081	2.000%	-8.0000			105.921	
VPI											
VPI	1504+65.60	105.6434		Pier 17							
VPI	1504+70.60	105.6284	-0.3004%	1504+68.00	105.636	2.000%	-8.0000			105.476	
VPI											
VPI	1506+15.60	105.8867		Pier 18							
VPI	1506+19.14	105.8974	0.3000%	1506+16.00	105.888	2.000%	-8.0000			105.728	
VPI											
VPI	1507+60.60	105.6753		Pier 19							
VPI	1507+65.60	105.6438	-0.6301%	1507+64.00	105.654	2.000%	-8.0000			105.494	
VPI											
VPI	1509+10.60	104.0562		Pier 20							
VPI	1509+15.60	103.9866	-1.3911%	1509+12.00	104.037	2.000%	-8.0000			103.877	
VPI											
VPI	1510+55.60	102.0390		Pier 21							
VPI	1510+60.60	101.9695	-1.3911%	1510+60.00	101.978	2.000%	-8.0000			101.818	
VPI											
VPI	1512+05.60	99.9608		Pier 22							
VPI	1512+10.60	99.8988	-1.2400%	1512+08.00	99.931	2.000%	-8.0000			99.771	

CLIENT:	CFX	ID:	PROJECT NO.:	EGXL6300	
PROJECT:	SR 414		MADE BY:	YT	10/29/20
STRUCTURE:	Segmental Structure		CHECKED BY:	SA	11/16/20
SUBJECT:	Geometry - 16.5' MVC at Piers		SHEET NO.:	3/ 3	

MINIMUM VERTICAL CLEARANCE

	STA.	El.	Grade	Location & STA.	PGL El.	Exist. Roadway Shldr C.S.	Offset (ft)			EOTL El.	
VPI	*1513+55.60*	*98.1008*		*Pier 23*							
VPI	*1513+60.60*	*98.0388*	*-1.2400%*	*1513+56.00*	98.096	*2.000%*	*2.7402*			98.151	Turn Lane
VPI											
VPI	*1515+00.60*	*96.3028*		*Pier 24*							
VPI	*1515+05.60*	*96.2408*	*-1.2400%*	*1515+04.00*	96.261	*2.000%*	*3.0000*			96.321	Turn Lane
VPI											
VPI	*1516+50.60*	*94.4428*		*Pier 25*							
VPI	*1516+55.60*	*94.3813*	*-1.2305%*	*1516+52.00*	94.426	*2.000%*	*3.0000*			94.486	Turn Lane
VPI											
VPI	*1517+95.60*	*92.9719*		*Pier 26*							
VPI	*1518+00.60*	*92.9328*	*-0.7829%*	*1518+00.00*	92.937	*2.000%*	*3.0000*			92.997	Turn Lane
VPI											

CLIENT:	CFX	ID:	PROJECT NO.:	EGXL6300	
PROJECT:	SR 414		MADE BY:	YT	10/29/20
STRUCTURE:	Segmental Structure - Normal Crown		CHECKED BY:	SA	11/16/20
SUBJECT:	Geometry - 14' MVC at Piers		SHEET NO.:	1/ 2	

MINIMUM VERTICAL CLEARANCE

DEFINITIONS

data	= User Input
data	= Calculated Value
data	= Emphasized Calculated Value

PROFILE: "BL_SR414_P" *(See Attached COGO)*

Curve 1	STA.	El.	Grade
VPT1	1477+25.00	124.8619	3.7000%
VPC1	1480+50.00	136.8869	3.7000%
VPI	1485+50.00	155.3869	-
VPT2	1490+50.00	153.8866	-0.3001%
VPC2	1513+60.00	146.9554	-0.3001%

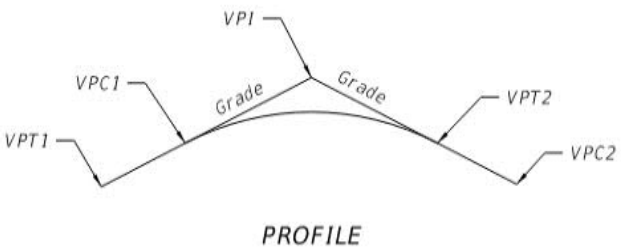

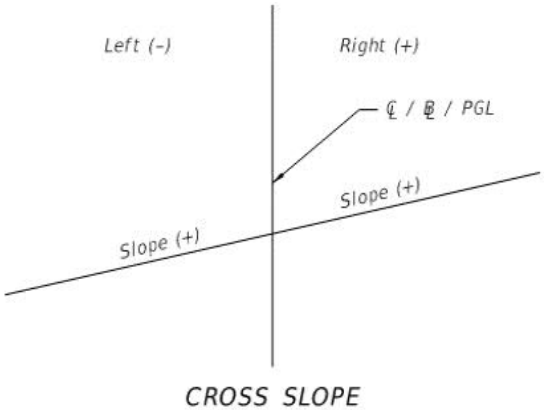

Rate of Change = -0.000040 %/STA. = *(VPT2 Grade - VPC1 Grade) / (VPT2 STA. - VPC1 STA.)*

Curve 2	STA.	El.	Grade
VPT1			
VPC1	1513+60.00	146.9554	-0.3001%
VPI	1518+60.00	145.4551	-
VPT2	1523+60.00	133.4551	-2.4000%
VPC2	1525+50.00	128.8951	-2.4000%

Rate of Change = -0.000021 %/STA. = *(VPT2 Grade - VPC1 Grade) / (VPT2 STA. - VPC1 STA.)*

Curve 3	STA.	El.	Grade
VPT1			
VPC1	1525+50.00	128.8951	-2.4000%
VPI	1529+50.00	119.2951	-
VPT2	1533+50.00	120.4951	0.3000%
VPC2	1553+00.00	126.3451	0.3000%

Rate of Change = 0.000034 %/STA. = *(VPT2 Grade - VPC1 Grade) / (VPT2 STA. - VPC1 STA.)*

Curve 4	STA.	El.	Grade
VPT1			
VPC1	1553+00.00	126.3451	0.3000%
VPI	1558+00.00	127.8451	-
VPT2	1563+00.00	124.0309	-0.7628%
VPC2	1574+50.00	115.2584	-0.7628%

Rate of Change = -0.000011 %/STA. = *(VPT2 Grade - VPC1 Grade) / (VPT2 STA. - VPC1 STA.)*

Curve 5	STA.	El.	Grade
VPT1			
VPC1	1574+50.00	115.2584	-0.7628%
VPI	1578+50.00	112.2071	-
VPT2	1582+50.00	116.9559	1.1872%
VPC2	1584+35.00	119.1521	1.1872%

Rate of Change = 0.000024 %/STA. = *(VPT2 Grade - VPC1 Grade) / (VPT2 STA. - VPC1 STA.)*

Superstructure Depth =	*9.0000*	ft
Bearing Depth =	*1.0000*	ft, *Assumed.*
Cap Depth 1 =	*5.0000*	ft
Cap Depth 2 =	*8.0000*	ft
Cap Depth 3 =	*3.0000*	ft

Structure Depth 1 =	9.0000	ft = *For approach/end spans = Superstructure Depth.*
Structure Depth 2 =	26.0000	ft = *Superstructure Depth + Bearing Depth + Cap Depth 1 + Cap Depth 2 + Cap Depth 3.*
Structure Depth 3 =	28.5000	ft = *Structure Depth 2 + (11.5' Haunched Section - Structure Depth 1).*

CLIENT:	CFX	ID:	PROJECT NO.:	EGXL6300	
PROJECT:	SR 414		MADE BY:	YT	10/29/20
STRUCTURE:	Segmental Structure - Normal Crown		CHECKED BY:	SA	11/16/20
SUBJECT:	Geometry - 14' MVC at Piers		SHEET NO.:	2/ 2	

MINIMUM VERTICAL CLEARANCE

Curve	Span No.	Span Length (ft)	Location	PGL Geometry STA.	PGL Geometry El.	Deck Geometry C.S.*	Deck Geometry Offset (ft)	Deck Geometry Deck El.	Structure Depth (ft)	Low Chord El.	Exist. Rdwy El. Below	MVC Provided (ft)	MVC Required (ft)	MVC Met?	Add'l VC Needed
Curve 1	0	0.00	Begin	1481+10.50	139.052	2.000%	-9.3333	138.866	9.000	129.866	106.810	23.055	0.000	Yes	-
	1	123.83	Pier 2	1482+34.33	143.028	2.000%	-9.3333	142.841	9.000	133.841	107.955	25.886	0.000	Yes	-
	2	123.83	Pier 3	1483+58.17	146.390	2.000%	-9.3333	146.203	9.000	137.203	108.479	28.724	0.000	Yes	-
	3	123.83	Pier 4	1484+82.00	149.138	2.000%	-9.3333	148.952	26.000	122.952	108.851	14.101	14.000	Yes	-
	4	148.00	Pier 5	1486+30.00	151.619	2.000%	-9.3333	151.432	26.000	125.432	109.295	16.137	14.000	Yes	-
	5	148.00	Pier 6	1487+78.00	153.223	2.000%	-9.3333	153.036	26.000	127.036	109.590	17.446	14.000	Yes	-
	6	148.00	Pier 7	1489+26.00	153.951	2.000%	-9.3333	153.764	26.000	127.764	109.147	18.618	14.000	Yes	-
	7	148.00	Pier 8	1490+74.00	153.815	2.000%	-9.3333	153.628	26.000	127.628	108.703	18.925	14.000	Yes	-
	8	148.00	Pier 9	1492+22.00	153.370	2.000%	-9.3333	153.184	26.000	127.184	108.258	18.926	14.000	Yes	-
	9	138.00	Pier 10	1493+60.00	152.956	2.000%	-9.3333	152.770	28.500	124.270	107.843	16.427	14.000	Yes	-
	10	230.00	Pier 11	1495+90.00	152.266	2.000%	-9.3333	152.079	28.500	123.579	107.817	15.762	14.000	Yes	-
	11	138.00	Pier 12	1497+28.00	151.852	2.000%	-9.3333	151.665	26.000	125.665	108.234	17.431	14.000	Yes	-
	12	148.00	Pier 13	1498+76.00	151.408	2.000%	-9.3333	151.221	26.000	125.221	107.948	17.273	14.000	Yes	-
	13	148.00	Pier 14	1500+24.00	150.964	2.000%	-9.3333	150.777	26.000	124.777	107.503	17.274	14.000	Yes	-
	14	148.00	Pier 15	1501+72.00	150.519	2.000%	-9.3333	150.333	26.000	124.333	107.059	17.274	14.000	Yes	-
	15	148.00	Pier 16	1503+20.00	150.075	2.000%	-9.3333	149.889	26.000	123.889	106.614	17.275	14.000	Yes	-
	16	148.00	Pier 17	1504+68.00	149.631	2.000%	-9.3333	149.445	26.000	123.445	106.170	17.275	14.000	Yes	-
	17	148.00	Pier 18	1506+16.00	149.187	2.000%	-9.3333	149.000	26.000	123.000	106.421	16.579	14.000	Yes	-
	18	148.00	Pier 19	1507+64.00	148.743	2.000%	-9.3333	148.556	26.000	122.556	106.187	16.369	14.000	Yes	-
	19	148.00	Pier 20	1509+12.00	148.299	2.000%	-9.3333	148.112	26.000	122.112	104.570	17.542	14.000	Yes	-
	20	148.00	Pier 21	1510+60.00	147.855	2.000%	-9.3333	147.668	26.000	121.668	102.511	19.157	14.000	Yes	-
	21	148.00	Pier 22	1512+08.00	147.410	2.000%	-9.3333	147.224	26.000	121.224	100.464	20.759	14.000	Yes	-
	22	148.00	Pier 23	1513+56.00	146.966	2.000%	-9.3333	146.780	26.000	120.780	98.129	22.650	14.000	Yes	-
Curve 2	23	148.00	Pier 24	1515+04.00	146.306	2.000%	-9.3333	146.119	26.000	120.119	96.294	23.825	14.000	Yes	-
	24	148.00	Pier 25	1516+52.00	145.184	2.000%	-9.3333	144.997	26.000	118.997	94.459	24.538	14.000	Yes	-
	25	148.00	Pier 26	1518+00.00	143.602	2.000%	-9.3333	143.416	26.000	117.416	92.971	24.445	14.000	Yes	-

**Normal Crown Section*

CLIENT:	CFX	ID:	PROJECT NO.:	EGXL6300	
PROJECT:	SR 414		MADE BY:	YT	10/29/20
STRUCTURE:	Segmental Structure - Superelevated Section at 6.5%		CHECKED BY:	SA	11/16/20
SUBJECT:	Geometry - 14' MVC at Piers		SHEET NO.:	1/ 2	

MINIMUM VERTICAL CLEARANCE

DEFINITIONS

data	= User Input
data	= Calculated Value
data	= Emphasized Calculated Value

PROFILE: "BL_SR414_P" *(See Attached COGO)*

Curve 1	STA.	El.	Grade
VPT1	1477+25.00	124.8619	3.7000%
VPC1	1480+50.00	136.8869	3.7000%
VPI	1485+50.00	155.3869	-
VPT2	1490+50.00	153.8866	-0.3001%
VPC2	1513+60.00	146.9554	-0.3001%

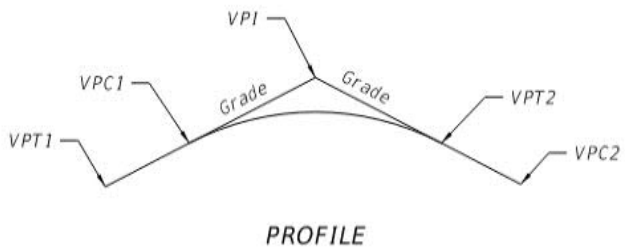

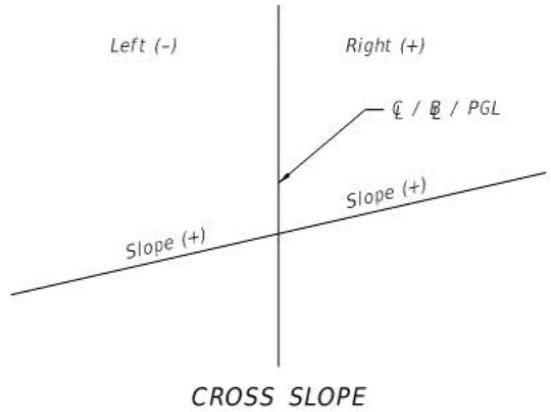

Rate of Change = -0.000040 %/STA. = *(VPT2 Grade - VPC1 Grade) / (VPT2 STA. - VPC1 STA.)*

Curve 2	STA.	El.	Grade
VPT1			
VPC1	1513+60.00	146.9554	-0.3001%
VPI	1518+60.00	145.4551	-
VPT2	1523+60.00	133.4551	-2.4000%
VPC2	1525+50.00	128.8951	-2.4000%

Rate of Change = -0.000021 %/STA. = *(VPT2 Grade - VPC1 Grade) / (VPT2 STA. - VPC1 STA.)*

Curve 3	STA.	El.	Grade
VPT1			
VPC1	1525+50.00	128.8951	-2.4000%
VPI	1529+50.00	119.2951	-
VPT2	1533+50.00	120.4951	0.3000%
VPC2	1553+00.00	126.3451	0.3000%

Rate of Change = 0.000034 %/STA. = *(VPT2 Grade - VPC1 Grade) / (VPT2 STA. - VPC1 STA.)*

Curve 4	STA.	El.	Grade
VPT1			
VPC1	1553+00.00	126.3451	0.3000%
VPI	1558+00.00	127.8451	-
VPT2	1563+00.00	124.0309	-0.7628%
VPC2	1574+50.00	115.2584	-0.7628%

Rate of Change = -0.000011 %/STA. = *(VPT2 Grade - VPC1 Grade) / (VPT2 STA. - VPC1 STA.)*

Curve 5	STA.	El.	Grade
VPT1			
VPC1	1574+50.00	115.2584	-0.7628%
VPI	1578+50.00	112.2071	-
VPT2	1582+50.00	116.9559	1.1872%
VPC2	1584+35.00	119.1521	1.1872%

Rate of Change = 0.000024 %/STA. = *(VPT2 Grade - VPC1 Grade) / (VPT2 STA. - VPC1 STA.)*

Superstructure Depth =	*9.0000*	ft
Bearing Depth =	*1.0000*	ft, *Assumed.*
Cap Depth 1 =	*5.0000*	ft
Cap Depth 2 =	*8.0000*	ft
Cap Depth 3 =	*3.0000*	ft

Structure Depth 1 =	9.0000	ft = *For approach/end spans = Superstructure Depth.*
Structure Depth 2 =	26.0000	ft = *Superstructure Depth + Bearing Depth + Cap Depth 1 + Cap Depth 2 + Cap Depth 3.*
Structure Depth 3 =	28.5000	ft = *Structure Depth 2 + (11.5' Haunched Section - Structure Depth 1).*

CLIENT:	CFX	ID:	PROJECT NO.:	EGXL6300	
PROJECT:	SR 414		MADE BY:	YT	10/29/20
STRUCTURE:	Segmental Structure - Superelevated Section at 6.5%		CHECKED BY:	SA	11/16/20
SUBJECT:	Geometry - 14' MVC at Piers		SHEET NO.:	2/ 2	

MINIMUM VERTICAL CLEARANCE

Curve	Span No.	Span Length (ft)	Location	PGL Geometry STA.	PGL Geometry El.	Deck Geometry C.S.*	Deck Geometry Offset (ft)	Deck Geometry Deck El.	Structure Depth (ft)	Low Chord El.	Exist. Rdwy El. Below	MVC Provided (ft)	MVC Required (ft)	MVC Met?	Add'l VC Needed
Curve 1	0	0.00	Begin	1481+10.50	139.052	-6.500%	9.3333	138.446	9.000	129.446	106.810	22.635	0.000	Yes	-
	1	123.83	Pier 2	1482+34.33	143.028	-6.500%	9.3333	142.421	9.000	133.421	107.955	25.466	0.000	Yes	-
	2	123.83	Pier 3	1483+58.17	146.390	-6.500%	9.3333	145.783	9.000	136.783	108.479	28.304	0.000	Yes	-
	3	123.83	Pier 4	1484+82.00	149.138	-6.500%	9.3333	148.532	26.000	122.532	108.851	13.681	14.000	No	0.319
	4	148.00	Pier 5	1486+30.00	151.619	-6.500%	9.3333	151.012	26.000	125.012	109.295	15.717	14.000	Yes	-
	5	148.00	Pier 6	1487+78.00	153.223	-6.500%	9.3333	152.616	26.000	126.616	109.590	17.026	14.000	Yes	-
	6	148.00	Pier 7	1489+26.00	153.951	-6.500%	9.3333	153.344	26.000	127.344	109.147	18.198	14.000	Yes	-
	7	148.00	Pier 8	1490+74.00	153.815	-6.500%	9.3333	153.208	26.000	127.208	108.703	18.505	14.000	Yes	-
	8	148.00	Pier 9	1492+22.00	153.370	-6.500%	9.3333	152.764	26.000	126.764	108.258	18.506	14.000	Yes	-
	9	138.00	Pier 10	1493+60.00	152.956	-6.500%	9.3333	152.350	28.500	123.850	107.843	16.007	14.000	Yes	-
	10	230.00	Pier 11	1495+90.00	152.266	-6.500%	9.3333	151.659	28.500	123.159	107.817	15.342	14.000	Yes	-
	11	138.00	Pier 12	1497+28.00	151.852	-6.500%	9.3333	151.245	26.000	125.245	108.234	17.011	14.000	Yes	-
	12	148.00	Pier 13	1498+76.00	151.408	-6.500%	9.3333	150.801	26.000	124.801	107.948	16.853	14.000	Yes	-
	13	148.00	Pier 14	1500+24.00	150.964	-6.500%	9.3333	150.357	26.000	124.357	107.503	16.854	14.000	Yes	-
	14	148.00	Pier 15	1501+72.00	150.519	-6.500%	9.3333	149.913	26.000	123.913	107.059	16.854	14.000	Yes	-
	15	148.00	Pier 16	1503+20.00	150.075	-6.500%	9.3333	149.469	26.000	123.469	106.614	16.855	14.000	Yes	-
	16	148.00	Pier 17	1504+68.00	149.631	-6.500%	9.3333	149.025	26.000	123.025	106.170	16.855	14.000	Yes	-
	17	148.00	Pier 18	1506+16.00	149.187	-6.500%	9.3333	148.580	26.000	122.580	106.421	16.159	14.000	Yes	-
	18	148.00	Pier 19	1507+64.00	148.743	-6.500%	9.3333	148.136	26.000	122.136	106.187	15.949	14.000	Yes	-
	19	148.00	Pier 20	1509+12.00	148.299	-6.500%	9.3333	147.692	26.000	121.692	104.570	17.122	14.000	Yes	-
	20	148.00	Pier 21	1510+60.00	147.855	-6.500%	9.3333	147.248	26.000	121.248	102.511	18.737	14.000	Yes	-
	21	148.00	Pier 22	1512+08.00	147.410	-6.500%	9.3333	146.804	26.000	120.804	100.464	20.339	14.000	Yes	-
	22	148.00	Pier 23	1513+56.00	146.966	-6.500%	9.3333	146.360	26.000	120.360	98.129	22.230	14.000	Yes	-
Curve 2	23	148.00	Pier 24	1515+04.00	146.306	-6.500%	9.3333	145.699	26.000	119.699	96.294	23.405	14.000	Yes	-
	24	148.00	Pier 25	1516+52.00	145.184	-6.500%	9.3333	144.577	26.000	118.577	94.459	24.118	14.000	Yes	-
	25	148.00	Pier 26	1518+00.00	143.602	-6.500%	9.3333	142.996	26.000	116.996	92.971	24.025	14.000	Yes	-

**Superelevated Section*

OK. Pier 4 is not within a curved section, so the slope is not 6.5%. It is within the normal crown section with a 2% cross slope, and vertical clearance is OK.

CLIENT:	CFX	ID:	PROJECT NO.:	EGXL6300	
PROJECT:	SR 414		MADE BY:	YT	10/29/20
STRUCTURE:	Segmental Structure		CHECKED BY:	SA	11/16/20
SUBJECT:	Geometry - 14' MVC at Piers		SHEET NO.:	1/ 3	

MINIMUM VERTICAL CLEARANCE

DEFINITIONS

data	= User Input
data	= Calculated Value
data	= Emphasized Calculated Value

PROFILE: "EX_SR414_P2" *(See Attached COGO)*

	STA.	El.	Grade	Location & STA.	PGL El.	Exist. Roadway Lane C.S.	Exist. Roadway Offset (ft)	Exist. Roadway SW C.S.	Exist. Roadway Offset (ft)	Curb Ht. (ft)	Sidewalk El.
VPI	*1481+09.74*	*106.2698*		*Begin*							
VPI	*1481+14.74*	*106.3171*	*0.9488%*	*1481+10.50*	106.277	*2.000%*	*0.0000*	*2.000%*	1.6667	*0.5000*	106.810
VPI											
VPI	*1482+29.58*	*107.3850*		*Pier 2*							
VPI	*1482+34.57*	*107.4231*	*0.7631%*	*1482+34.33*	107.421	*2.000%*	*0.0000*	*2.000%*	1.6667	*0.5000*	107.955
VPI											
VPI	*1483+54.41*	*107.9343*		*Pier 3*							
VPI	*1483+59.40*	*107.9493*	*0.3004%*	*1483+58.17*	107.946	*2.000%*	*0.0000*	*2.000%*	1.6667	*0.5000*	108.479
VPI											
VPI	*1484+79.24*	*108.3093*		*Pier 4*							
VPI	*1484+84.23*	*108.3243*	*0.3004%*	*1484+82.00*	108.318	*2.000%*	*0.0000*	*2.000%*	1.6667	*0.5000*	108.851
VPI											
VPI	*1486+29.17*	*108.7593*		*Pier 5*							
VPI	*1486+34.21*	*108.7743*	*0.2980%*	*1486+30.00*	108.762	*2.000%*	*0.0000*	*2.000%*	1.6667	*0.5000*	109.295
VPI											
VPI	*1487+75.02*	*109.0655*		*Pier 6*							
VPI	*1487+80.04*	*109.0505*	*-0.2992%*	*1487+78.00*	109.057	*2.000%*	*0.0000*	*2.000%*	1.6667	*0.5000*	109.590
VPI											
VPI	*1489+25.60*	*108.6145*		*Pier 7*							
VPI	*1489+30.62*	*108.5995*	*-0.2998%*	*1489+26.00*	108.613	*2.000%*	*0.0000*	*2.000%*	1.6667	*0.5000*	109.147
VPI											
VPI	*1490+70.93*	*108.1785*		*Pier 8*							
VPI	*1490+75.94*	*108.1635*	*-0.3002%*	*1490+74.00*	108.169	*2.000%*	*0.0000*	*2.000%*	1.6667	*0.5000*	108.703
VPI											
VPI	*1492+21.08*	*107.7275*		*Pier 9*							
VPI	*1492+26.08*	*107.7124*	*-0.3006%*	*1492+22.00*	107.725	*2.000%*	*0.0000*	*2.000%*	1.6667	*0.5000*	108.258
VPI											
VPI	*1493+66.08*	*107.2915*		*Pier 10*							
VPI	*1493+71.07*	*107.2764*	*-0.3008%*	*1493+60.00*	107.310	*2.000%*	*0.0000*	*2.000%*	1.6667	*0.5000*	107.843

CLIENT: CFX ID:

PROJECT: SR 414

STRUCTURE: Segmental Structure

SUBJECT: Geometry - 14' MVC at Piers

PROJECT NO.: EGXL6300

MADE BY: YT 10/29/20

CHECKED BY: SA 11/16/20

SHEET NO.: 2/ 3

MINIMUM VERTICAL CLEARANCE

	STA.	El.	Grade	Location & STA.	PGL El.	Exist. Roadway Lane C.S.	Exist. Roadway Offset (ft)	Exist. Roadway SW C.S.	Exist. Roadway Offset (ft)	Curb Ht. (ft)	Sidewalk El.
VPI	1495+15.98	107.0600		Pier 11							
VPI	1495+20.97	107.0751	0.3021%	1495+90.00	107.284	2.000%	0.0000	2.000%	1.6667	0.5000	107.817
VPI											
VPI	1497+25.77	107.6938		Pier 12							
VPI	1497+30.77	107.7089	0.3021%	1497+28.00	107.701	2.000%	0.0000	2.000%	1.6667	0.5000	108.234
VPI											
VPI	1498+75.65	107.4155		Pier 13							
VPI	1498+80.65	107.4005	-0.3004%	1498+76.00	107.414	2.000%	0.0000	2.000%	1.6667	0.5000	107.948
VPI											
VPI	1500+20.60	106.9802		Pier 14							
VPI	1500+25.60	106.9651	-0.3004%	1500+24.00	106.970	2.000%	0.0000	2.000%	1.6667	0.5000	107.503
VPI											
VPI	1501+70.60	106.5296		Pier 15							
VPI	1501+75.60	106.5145	-0.3004%	1501+72.00	106.525	2.000%	0.0000	2.000%	1.6667	0.5000	107.059
VPI											
VPI	1503+15.60	106.0940		Pier 16							
VPI	1503+20.60	106.0790	-0.3004%	1503+20.00	106.081	2.000%	0.0000	2.000%	1.6667	0.5000	106.614
VPI											
VPI	1504+65.60	105.6434		Pier 17							
VPI	1504+70.60	105.6284	-0.3004%	1504+68.00	105.636	2.000%	0.0000	2.000%	1.6667	0.5000	106.170
VPI											
VPI	1506+15.60	105.8867		Pier 18							
VPI	1506+19.14	105.8974	0.3000%	1506+16.00	105.888	2.000%	0.0000	2.000%	1.6667	0.5000	106.421
VPI											
VPI	1507+60.60	105.6753		Pier 19							
VPI	1507+65.60	105.6438	-0.6301%	1507+64.00	105.654	2.000%	0.0000	2.000%	1.6667	0.5000	106.187
VPI											
VPI	1509+10.60	104.0562		Pier 20							
VPI	1509+15.60	103.9866	-1.3911%	1509+12.00	104.037	2.000%	0.0000	2.000%	1.6667	0.5000	104.570
VPI											
VPI	1510+55.60	102.0390		Pier 21							
VPI	1510+60.60	101.9695	-1.3911%	1510+60.00	101.978	2.000%	0.0000	2.000%	1.6667	0.5000	102.511
VPI											
VPI	1512+05.60	99.9608		Pier 22							
VPI	1512+10.60	99.8988	-1.2400%	1512+08.00	99.931	2.000%	0.0000	2.000%	1.6667	0.5000	100.464

CLIENT:	CFX	ID:	PROJECT NO.:	EGXL6300	
PROJECT:	SR 414		MADE BY:	YT	10/29/20
STRUCTURE:	Segmental Structure		CHECKED BY:	SA	11/16/20
SUBJECT:	Geometry - 14' MVC at Piers		SHEET NO.:	3/ 3	

MINIMUM VERTICAL CLEARANCE

	STA.	El.	Grade	Location & STA.	PGL El.	Exist. Roadway Lane C.S.	Exist. Roadway Offset (ft)	Exist. Roadway SW C.S.	Exist. Roadway Offset (ft)	Curb Ht. (ft)	Sidewalk El.
VPI	1513+55.60	98.1008		Pier 23							
VPI	1513+60.60	98.0388	-1.2400%	1513+56.00	98.096	2.000%	0.0000	2.000%	1.6667	0.5000	98.129
VPI											
VPI	1515+00.60	96.3028		Pier 24							
VPI	1515+05.60	96.2408	-1.2400%	1515+04.00	96.261	2.000%	0.0000	2.000%	1.6667	0.5000	96.294
VPI											
VPI	1516+50.60	94.4428		Pier 25							
VPI	1516+55.60	94.3813	-1.2305%	1516+52.00	94.426	2.000%	0.0000	2.000%	1.6667	0.5000	94.459
VPI											
VPI	1517+95.60	92.9719		Pier 26							
VPI	1518+00.60	92.9328	-0.7829%	1518+00.00	92.937	2.000%	0.0000	2.000%	1.6667	0.5000	92.971
VPI											
VPI											
VPI											
VPI											
VPI											
VPI											
VPI											
VPI											
VPI											
VPI											
VPI											
VPI											
VPI											
VPI											
VPI											
VPI											
VPI											
VPI											
VPI											
VPI											
VPI											
VPI											
VPI											
VPI											
VPI											

Copyright: (c) 2013 Bentley Systems, Incorporated. All rights reserved.
Project: SR414
Subject: Profile
Job No. 414 Operator: YT
Date: Friday February 26, 2021 1:20 pm

SYSTEM FIX 4 ASEC 4 BEAR PRI 0 NOR NE STA 2 FILE: 'SR414_PROFILE'

* 1 Print Profile BL_SR414_P

Beginning profile BL_SR414_P description:
Feature: Baseline(BL)

		STATION	ELEV	GRADE	TOTAL L	BACK L	AHEAD L
VPI	1	1459+42.16	126.7943				
VPC		1469+25.00	114.9019	-1.2100	K = 162.9		
Low Point		1471+22.15	113.7091				
VPI	2	1473+25.00	110.0619		800.0000	400.0000	400.0000
VPT		1477+25.00	124.8619	3.7000			
VPC		1480+50.00	136.8869	3.7000	K = 250.0	SSD = 734.5	
VPI	3	1485+50.00	155.3869		1,000.0000	500.0000	500.0000
High Point		1489+74.99	153.9991				
VPT		1490+50.00	153.8866	-0.3001			
VPC		1513+60.00	146.9554	-0.3001	K = 476.2	SSD = 1013.8	
VPI	4	1518+60.00	145.4551		1,000.0000	500.0000	500.0000
VPT		1523+60.00	133.4551	-2.4000			
VPC		1525+50.00	128.8951	-2.4000	K = 296.3		
VPI	5	1529+50.00	119.2951		800.0000	400.0000	400.0000
Low Point		1532+61.11	120.3617				
VPT		1533+50.00	120.4951	0.3000			
VPC		1553+00.00	126.3451	0.3000	K = 940.9	SSD = 1515.2	
High Point		1555+82.27	126.7685				
VPI	6	1558+00.00	127.8451		1,000.0000	500.0000	500.0000
VPT		1563+00.00	124.0309	-0.7628			
VPC		1574+50.00	115.2584	-0.7628	K = 410.3		
Low Point		1577+62.95	114.0648				
VPI	7	1578+50.00	112.2071		800.0000	400.0000	400.0000
VPT		1582+50.00	116.9559	1.1872			
VPI	8	1584+35.00	119.1521	1.1872			

Ending profile BL_SR414_P description

CLIENT:	CFX	**PROJECT NO.:**	414-227
PROJECT:	SR 414 Expressway Ext. PD&E	**DESIGNED BY:**	TB
STRUCTURE:	Viaduct over SR414	**CHECKED BY:**	RK
SUBJECT:	Upper and Lower Profile	**SHEET NO.:**	

Upper Profile (Viaduct Elevation)

Section-1

	Station	Elevation
Start sta.	1513+00.000	147.14
	Slope	-0.30%
End sta.	1513+60.000	146.96

Section-2

g1	-0.30%
g2	-2.40%
Length VC	1000
PVC El.	146.96
Sta.	1513+60.000

Sta.	El.			
1514+00.000	146.82			
1515+00.000	146.33			
1516+00.000	145.64			
1517+00.000	144.73			
1518+00.000	143.61	1518+00.000	143.61	[Pier 26]
1519+00.000	142.28	1519+38.000	141.22	[Pier 27]
1520+00.000	140.74	1520+45.690	139.26	[Eden Park Rd]
1521+00.000	138.99	1521+68.000	137.68	[Pier 28]
1522+00.000	137.03			
1523+00.000	134.86	1523+06.000	134.73	[Pier 29]
1523+60.000	133.46			

Section-3

	Station	Elevation
Start sta.	1523+60.000	133.46
	Slope	-2.40%
	1524+00.000	132.50
	1525+00.000	130.10
End sta.	1525+50.000	128.90

1524+69.500	130.83	[Pier 30]

Section-4

g1	-2.40%
g2	0.30%
Length VC	800
PVC El.	128.9000
Sta.	1525+50.000

Sta.	El.			
1526+00.000	127.74	1526+33.000	127.02	[Pier 31]
1527+00.000	125.68	1527+96.500	124.01	[Pier 32]
1528+00.000	123.95			
1529+00.000	122.57	1529+60.000	121.90	[Pier 33]
1530+00.000	121.52			
1531+00.000	120.80	1531+23.500	120.69	[Pier 34]
1532+00.000	120.43	1532+87.000	120.38	[Pier 35]
1533+00.000	120.39			
1533+50.000	120.50			

Section-5

	Station	Elevation			
Start sta.	1533+50.000	120.50			
	Slope	0.30%			
	1534+00.000	120.65	1534+50.000	120.80	[Pier 36]
	1535+00.000	120.95			
	1536+00.000	121.25			
	1537+00.000	121.55	1537+50.500	121.70	[Pier 37]
	1538+00.000	121.85			
	1539+00.000	122.15	1539+14.000	122.19	[Pier 38]
	1540+00.000	122.45	1540+27.400	122.53	[Pier 39]
	1541+00.000	122.75	1541+80.400	122.99	[Pier 40]
	1542+00.000	123.05			
	1543+00.000	123.35	1543+13.600	123.39	[Pier 41]
	1544+00.000	123.65	1544+46.800	123.79	[Pier 42]
	1545+00.000	123.95	1545+80.000	124.19	[Pier 43]
	1546+00.000	124.25	1546+82.290	124.50	[Magnolia Homes Rd]
	1547+00.000	124.55	1547+90.000	124.82	[Pier 44]
	1548+00.000	124.85			
	1549+00.000	125.15	1549+23.200	125.22	[Pier 45]
	1550+00.000	125.45	1550+56.400	125.62	[Pier 46]
	1551+00.000	125.75			
	1552+00.000	126.05	1552+04.400	126.06	[Pier 47]
End sta.	1553+00.000	126.35			

Section-6

g1	0.30%
g2	-0.76%
Length VC	1000
PVC El.	126.35
Sta.	1553+00.000

Sta.	El.
1554+00.000	126.60
1555+00.000	126.74
1556+00.000	126.77
1557+00.000	126.70
1558+00.000	126.52
1559+00.000	126.24
1560+00.000	125.85
1561+00.000	125.35
1562+00.000	124.74
1563+00.000	124.04

1553+52.400	126.49	[Pier 48]
1555+00.400	126.74	[Pier 49]
1555+80.000	126.77	[Little Wekiva]
1556+50.400	126.75	[Pier 50]
1557+83.600	126.56	[Pier 51]
1559+16.800	126.18	[Pier 52]
1559+68.290	125.98	[Gateway Dr]
1560+64.800	125.54	[Pier 53]
1562+12.800	124.66	[Pier 54]

Section-7

	Station	Elevation
Start sta.	1563+00.000	124.04
	Slope	-0.76%
	1564+00.000	123.27
	1565+00.000	122.51
	1566+00.000	121.75
	1567+00.000	120.98
	1568+00.000	120.22
	1569+00.000	119.46

1563+60.800	123.57	[Pier 55]
1565+08.800	122.44	[Pier 56]
1566+56.800	121.31	[Pier 57]
1568+04.800	120.18	[Pier 58]
1569+52.800	119.05	[End]

Lower Profile (SR 414 Elevation)

Section-1

	Station	Elevation
Start sta.	1514+00.000	97.55
	Slope	-1.240%
	1515+00.000	96.31
	1516+00.000	95.07
End sta.	1516+50.000	94.45

Section-2

g1	-1.240%
g2	-0.314%
Length VC	300
PVC El.	94.45
Sta.	1516+50.000

Sta.	El.	Station	Elevation	
1517+00.000	93.87			
1518+00.000	92.94	1518+00.000	92.94	[Pier 26]
1519+00.000	92.31	1519+38.000	92.16	[Pier 27]
1519+50.000	92.12			

Section-3

	Station	Elevation
Start sta.	1519+50.000	92.12
	Slope	-0.314%
	1520+00.000	91.96
	1521+00.000	91.65
End sta.	1521+50.000	91.49

1520+45.690	91.82	[Eden Park Rd]	

Section-4

g1	-0.314%
g2	-2.648%
Length VC	300
PVC El.	91.4910
Sta.	1521+50.000

Sta.	El.			
		1521+68.000	91.42	[Pier 28]
1522+00.000	91.24			
1523+00.000	90.14	1523+06.000	90.05	[Pier 29]
1524+00.000	88.27	1524+69.500	86.52	[Pier 30]
1524+50.000	87.05			

Section-5

	Station	Elevation			
Start sta.	1524+50.000	87.05			
	Slope	-2.648%			
	1525+00.000	85.72			
	1526+00.000	83.08	1526+33.000	82.20	[Pier 31]
End sta.	1526+90.000	80.69			

Section-6

g1	-2.648%
g2	-0.412%
Length VC	300
PVC El.	80.69
Sta.	1526+90.000

Sta.	El.			
1527+00.000	80.43	1527+96.500	78.30	[Pier 32]
1528+00.000	78.23			
1529+00.000	76.78	1529+60.000	76.26	[Pier 33]
1529+90.000	76.10			

Section-7

	Station	Elevation			
Start sta.	1529+90.000	76.10			
	Slope	-0.412%			
	1530+00.000	76.06			
	1531+00.000	75.65	1531+23.500	75.55	[Pier 34]
End sta.	1531+50.000	75.44			

Section-8

g1	-0.412%
g2	0.667%
Length VC	200
PVC El.	75.44
Sta.	1531+50.000

Sta.	El.			
1532+00.000	75.31	1532+87.000	75.39	[Pier 35]
1533+00.000	75.43			
1533+50.000	75.70			

Section-9

	Station	Elevation			
Start sta.	1533+50.000	75.70			
	Slope	0.667%			
	1534+00.000	76.03	1534+50.000	76.37	[Pier 36]
	1535+00.000	76.70			
End sta.	1535+50.000	77.03			

Section-10

g1	0.667%
g2	-0.750%
Length VC	300
PVC El.	77.03
Sta.	1535+50.000

Sta.	El.			
1536+00.000	77.31			
1537+00.000	77.50	1537+50.500	77.42	[Pier 37]
1538+00.000	77.22			
1538+50.000	76.91			

Section-11

	Station	Elevation			
Start sta.	1538+50.000	76.91			
	Slope	-0.750%			
	1539+00.000	76.53	1539+14.000	76.43	[Pier 38]
	1540+00.000	75.78	1540+27.400	75.58	[Pier 39]
	1541+00.000	75.03	1541+80.400	74.43	[Pier 40]
End sta.	1542+00.000	74.28			

Section-12

g1	-0.750%
g2	0.688%
Length VC	200
PVC El.	74.28
Sta.	1542+00.000

Sta.	El.			
1542+00.000	74.28			
1543+00.000	73.89	1543+13.600	73.90	[Pier 41]
1544+00.000	74.22			

Section-13

	Station	Elevation			
Start sta.	1544+00.000	74.22			
	Slope	0.688%			
			1544+46.800	74.54	[Pier 42]
	1545+00.000	74.91	1545+80.000	75.46	[Pier 43]
	1546+00.000	75.60	1546+82.290	76.16	[Magnolia Homes Rd]
	1547+00.000	76.29	1547+90.000	76.90	[Pier 44]
	1548+00.000	76.97			
	1549+00.000	77.66	1549+23.200	77.82	[Pier 45]
End sta.	1549+99.990	78.35			

Section-14

g1	0.688%
g2	-0.841%
Length VC	200
PVC El.	78.35
Sta.	1549+99.990

Sta.	El.			
1550+00.000	78.35	1550+56.400	78.62	[Pier 46]
1551+00.000	78.65			
1551+99.990	78.20			

Section-15

	Station	Elevation			
Start sta.	1551+99.990	78.20			
	Slope	-0.841%			
	1552+00.000	78.20	1552+04.400	78.16	[Pier 47]
	1553+00.000	77.35			
End sta.	1553+20.000	77.19			

Section-16

g1	-0.841%
g2	0.936%
Length VC	200
PVC El.	77.19
Sta.	1553+20.000

Sta.	El.			
		1553+52.400	76.96	[Pier 48]
1554+00.000	76.80			
1555+00.000	77.11	1555+00.400	77.12	[Pier 49]
1555+20.000	77.28			

Section-17

	Station	Elevation			
Start sta.	1555+20.000	77.28			
	Slope	0.895%			
			1555+80.000	77.82	[Little Wekiva]
	1556+00.000	78.00	1556+50.400	78.45	[Pier 50]
	1557+00.000	78.89	1557+83.600	79.64	[Pier 51]
	1558+00.000	79.79	1559+16.800	80.83	[Pier 52]
	1559+00.000	80.68	1559+68.290	81.29	[Gateway Dr]
	1560+00.000	81.58	1560+64.800	82.16	[Pier 53]
	1561+00.000	82.47			

Section-18

	Station	Elevation			
Start sta.	1561+00.000	82.47			
	Slope	0.708%			
	1562+00.000	83.18	1562+12.800	83.27	[Pier 54]
	1563+00.000	83.89	1563+60.800	84.32	[Pier 55]
	1564+00.000	84.60			
	1565+00.000	85.30	1565+08.800	85.37	[Pier 56]
	1566+00.000	86.01	1566+56.800	86.41	[Pier 57]
	1567+00.000	86.72			
	1568+00.000	87.43	1568+04.800	87.46	[Pier 58]
	1569+00.000	88.14	1569+52.800	88.51	[End]
	1570+00.000	88.84			

CLIENT: CFX
PROJECT: SR 414 Expressway Ext. PD&E
STRUCTURE: Viaduct over SR414
SUBJECT: Minimum Vertical Clearance Calculations

PROJECT NO.: 414-227
DESIGNED BY: TB
CHECKED BY: RK
SHEET NO.:

MINIMUM VERTICAL CLEARANCE

Section	Span No.	Span Length (ft)	Location	PGL Geometry STA.	PGL Geometry EL	Deck Geometry C.S.	Deck Geometry Offset (ft)	Deck Geometry Deck El.	Superstructure Depth (ft)	Cap Depth*	Low Chord El.	Exist. Rdwy El.	MVC Provided	MVC Required	MVC Met?	Add'l VC Needed
Section 2	25	138'-0"	Pier 26	1518+00.000	143.607	2.00%	19.000	143.227	9	17.0052	117.222	92.94	24.285	16.5	YES	-
	26	138'-0"	Pier 27	1519+38.000	141.217	2.00%	19.000	140.837	12	10.3000	118.537	92.16	26.378	16.5	YES	-
	27	230'-0"	Pier 28	1521+68.000	137.681	2.00%	19.000	137.301	12	16.6406	108.660	91.42	17.238	16.5	YES	-
	28	138'-0"	Pier 29	1523+06.000	134.725	2.00%	19.000	134.345	9	16.6406	108.705	90.05	18.650	16.5	YES	-
Section 3	29	163'-6"	Pier 30	1524+69.500	130.832	2.00%	19.000	130.452	9	16.6406	104.811	86.52	18.295	16.5	YES	-
Section 4	30	163'-6"	Pier 31	1526+33.000	127.024	2.00%	19.000	126.644	9	16.6406	101.004	82.20	18.801	16.5	YES	-
	31	163'-6"	Pier 32	1527+96.500	124.009	2.00%	19.000	123.629	9	10.3000	104.329	78.30	26.034	16.5	YES	-
	32	163'-6"	Pier 33	1529+60.000	121.897	2.00%	19.000	121.517	9	10.3000	102.217	76.26	25.957	16.5	YES	-
	33	163'-6"	Pier 34	1531+23.500	120.686	2.00%	19.000	120.306	9	10.3000	101.006	75.55	25.453	16.5	YES	-
	34	163'-6"	Pier 35	1532+87.000	120.378	2.00%	19.000	119.998	12	10.3000	97.698	75.39	22.313	16.5	YES	-
Section 5	35	163'-6"	Pier 36	1534+50.000	120.800	2.00%	19.000	120.420	16	11.3000	93.120	76.37	16.754	16.5	YES	-
	36	300'-0"	Pier 37	1537+50.500	121.702	2.00%	19.000	121.322	16	11.3000	94.022	77.42	16.601	16.5	YES	-
	37	163'-6"	Pier 38	1539+14.000	122.192	2.00%	19.000	121.812	12	10.3000	99.512	76.43	23.084	16.5	YES	-
	38	133'-2 3/8"	Pier 39	1540+27.400	122.532	2.00%	19.000	122.152	9	10.3000	102.852	75.58	27.275	16.5	YES	-
	39	133'-2 3/8"	Pier 40	1541+80.400	122.991	2.00%	19.000	122.611	9	17.0052	96.606	74.43	22.176	16.5	YES	-
	40	133'-2 3/8"	Pier 41	1543+13.600	123.391	2.00%	19.000	123.011	9	17.0052	97.006	73.90	23.111	16.5	YES	-
	41	133'-2 3/8"	Pier 42	1544+46.800	123.790	2.00%	19.000	123.410	9	17.0052	97.405	74.54	22.862	16.5	YES	-
	42	133'-2 3/8"	Pier 43	1545+80.000	124.190	2.00%	19.000	123.810	12	17.0052	94.805	75.46	19.345	16.5	YES	-
	43	210'-0"	Pier 44	1547+90.000	124.820	2.00%	19.000	124.440	12	16.6406	95.799	76.90	18.895	16.5	YES	-
	44	133'-2 3/8"	Pier 45	1549+23.200	125.220	2.00%	19.000	124.840	9	16.6406	99.199	77.82	21.378	16.5	YES	-
	45	133'-2 3/8"	Pier 46	1550+56.400	125.619	2.00%	19.000	125.239	9	16.6406	99.599	78.62	20.983	16.5	YES	-
	46	148'-0"	Pier 47	1552+04.400	126.063	2.00%	19.000	125.683	9	16.6406	100.043	78.16	21.884	16.5	YES	-
Section 6	47	148'-0"	Pier 48	1553+52.400	126.493	2.00%	19.000	126.113	9	16.6406	100.472	76.96	23.511	16.5	YES	-
	48	148'-0"	Pier 49	1555+00.400	126.738	2.00%	19.000	126.358	9	10.3000	107.058	77.12	29.942	16.5	YES	-
	49	150'-0"	Pier 50	1556+50.400	126.749	2.00%	19.000	126.369	9	17.0052	100.363	78.45	21.915	16.5	YES	-
	50	133'-2 3/8"	Pier 51	1557+83.600	126.558	2.00%	19.000	126.178	9	17.0052	100.173	79.64	20.532	16.5	YES	-
	51	133'-2 3/8"	Pier 52	1559+16.800	126.178	2.00%	19.000	125.798	9	17.0052	99.793	80.83	18.960	16.5	YES	-
	52	148'-0"	Pier 53	1560+64.800	125.536	2.00%	19.000	125.156	9	10.3000	105.856	82.16	23.698	16.5	YES	-
	53	148'-0"	Pier 54	1562+12.800	124.660	2.00%	19.000	124.280	9	10.3000	104.980	83.27	21.709	16.5	YES	-
Section 7	54	148'-0"	Pier 55	1563+60.800	123.571	2.00%	19.000	123.191	9	10.3000	103.891	84.32	19.572	16.5	YES	-
	55	148'-0"	Pier 56	1565+08.800	122.442	2.00%	19.000	122.062	9	10.3000	102.762	85.37	17.395	16.5	YES	-
	56	148'-0"	Pier 57	1566+56.800	121.313	2.00%	19.000	120.933	9	7.5000	104.433	86.41	18.018	14	YES	-
	57	148'-0"	Pier 58	1568+04.800	120.183	2.00%	19.000	119.803	9	0.0000	110.803	87.46	23.341	14	YES	-
	58	148'-0"	End	1569+52.800	119.054	2.00%	19.000	118.674	9	-	109.674	88.51	21.164	-	-	-

* cap depth is at critical point over roadway and includes bearing and pedestal height

CLIENT: CFX
PROJECT: SR 414 Expressway Ext. PD&E
STRUCTURE: Viaduct over SR414
SUBJECT: Clearance Checks Over Existing Bridges and Roads

PROJECT NO.: 414-227
DESIGNED BY: TB
CHECKED BY: RK
SHEET NO.:

SR 414 Over Lake Bosse Bridge

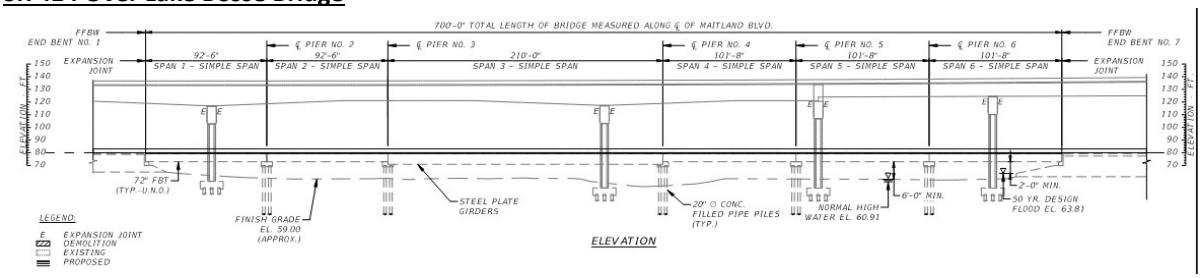

Bridge Depth (At Pier 37)			**Bridge Depth (Middle of Span 36-Station 1536+00)**		
Deck Elevation	121.702	ft	Deck Elevation	121.25	ft
Deck Slope	0.380	ft	Deck Slope	0.38	ft
Superstructure Depth	16	ft	Superstructure Depth	12	ft
Bearing	1	ft			
Cap Depth	10.3	ft			
Elevation at Bottom of Pier Cap	94.022	ft	Elevation Under Viaduct	108.87	ft
Elevation of Bridge Below	77.421	ft	Elevation of Bridge Below	77.31	ft
Vertical Clearance Provided	16.601	ft	Vertical Clearance Provided	31.56	ft
Vertical Clearance Requirement	16.5	ft	Vertical Clearance Requirement	16.5	ft
	OK			OK	

SR 414 Over Little Wekiva Bridge (Station 1555+80)

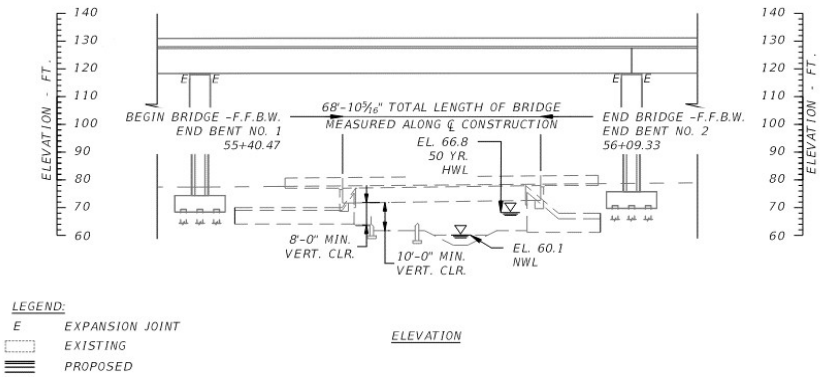

Bridge Depth

Deck Elevation	126.77	ft
Deck Slope	0.380	ft
Superstructure Depth	9	ft
Elevation Under Viaduct	117.39	ft
Elevation of Bridge Below	77.82	ft
Vertical Clearance Provided	39.57	ft
Vertical Clearance Requirement	16.5	ft
	OK	

SR 414 Over Eden Park Rd (Station 1520+45.69)

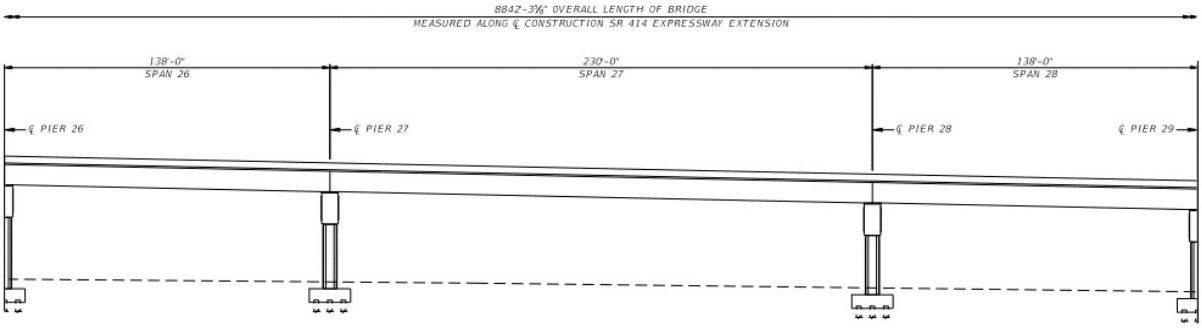

Bridge Depth

Deck Elevation	139.26	ft	
Deck Slope	0.380	ft	
Superstructure Depth	9	ft	
Elevation Under Viaduct	129.88	ft	
Elevation of Road Below	91.82	ft	
Vertical Clearance Provided	38.06	ft	
Vertical Clearance Requirement	17.5	ft	(Mast Arm and Signal Heads)
	OK		

SR 414 Over Magnolia Homes Rd (Station 1546+82.29)

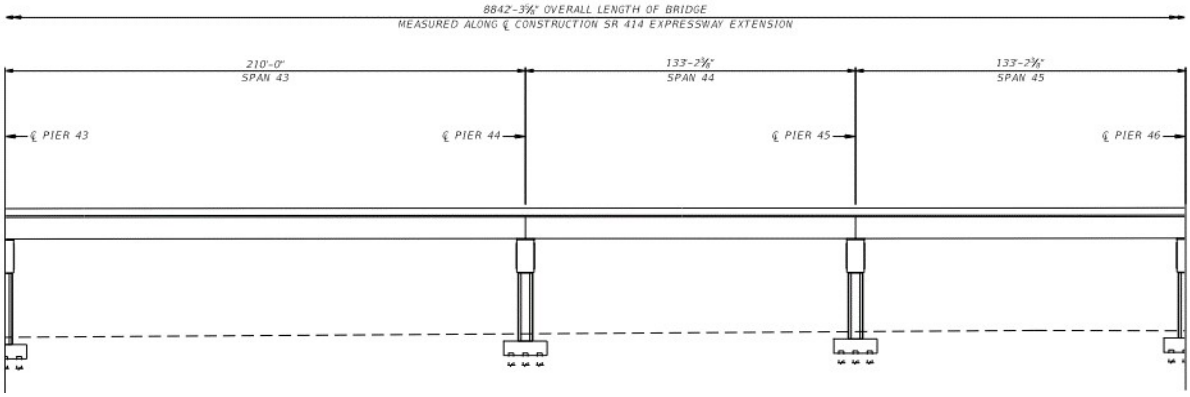

Bridge Depth

Deck Elevation	124.50	ft	
Deck Slope	0.380	ft	
Superstructure Depth	9	ft	
Elevation Under Viaduct	115.12	ft	
Elevation of Road Below	76.16	ft	
Vertical Clearance Provided	38.95	ft	
Vertical Clearance Requirement	17.5	ft	(Mast Arm and Signal Heads)
	OK		

SR 414 Over Gateway Dr (Station 1559+68.29)

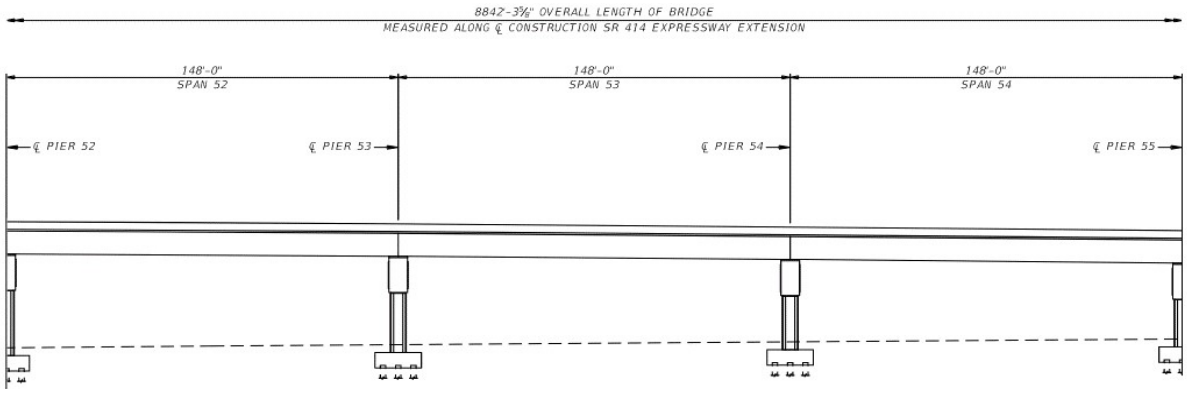

Bridge Depth

Deck Elevation	125.98	ft	
Deck Slope	0.380	ft	
Superstructure Depth	9	ft	
Elevation Under Viaduct	116.60	ft	
Elevation of Road Below	81.29	ft	
Vertical Clearance Provided	35.31	ft	
Vertical Clearance Requirement	17.5	ft	(Mast Arm and Signal Heads)
	OK		

CONCEPTUAL PIER DESIGN SUMMARY SHEET

PROJECT NO.: 414-227
DESIGNED BY: KV
CHECKED BY: RK
SHEET NO.:

Pier	Pile grid	Footing dimesion	Max. factored load(kips)	Φ	Nominal bearing resistance(TONS)
27	7 X 7	34' X 34' X 6'	305	0.65	234
28	7 X 7	34' X 34' X 6'	305	0.65	234
29	7 X 6	34' X 29' X 6'	361	0.65	278
30	7 X 6	34' X 29' X 6'	361	0.65	278
31	7 X 6	34' X 29' X 6'	361	0.65	278
32	7 X 6	34' X 29' X 6'	361	0.65	278
33	7 X 6	34' X 29' X 6'	361	0.65	278
34	7 X 6	34' X 29' X 6'	361	0.65	278
35	7 X 6	34' X 29' X 6'	361	0.65	278
36	9 X 9	44' X 44' X 6'	259	0.75	172
37	9 X 9	44' X 44' X 6'	259	0.75	172
38	9 X 6 staggered	42.5' X 22.5' X 6'	278	0.65	214
39	9 X 6 staggered	42.5' X 22.5' X 6'	278	0.65	214

PIER 27-28

PIER GEOMETRY

Pier Info:

Pier View:	Upstation.
Pier Type:	Hammer Head

Column Shape: Rectangular Non Tapered

Length(X) = 62.00 ft Height max(Y) = 12.50 ft Height min(Y) = 5.00 ft
Bottom length(X) = 16.00 ft Depth(Z) = 10.00 ft Skew angle = 0.00 Reduction of I = 1.000

SUPERSTRUCTURE INFO

Superstructure info:

Total number of spans:	3
Span number rear to current pier:	1
Number of traffic lanes:	7
Barrier height :	33.86 in
Depth of slab :	0.00 in
Curb to curb distance:	85.850 ft

Beam info:

Height in	Section area in^2	Inertia (Ixx) in^4	Inertia (Iyy) in^4	Beam CG in
108.00	24436.21	46904444.00	2040667008.00	47.68

Span #	Span length ft	Bridge Width ft
1	138.000	89.000
2	230.000	89.000
3	138.000	89.000
		89.000

BEARING POINTS

Number of bearing lines: 1

First bearing line **Eccentricity = -0.00 ft**

Point	Distance ft
1	0.62
2	18.38
3	43.62
4	61.38

MATERIAL PROPERTIES

MATERIAL PROPERTIES

	Cap	Column	Footing
Concrete Type	normal	normal	normal
Concrete Strength (psi)	4000.00	5000.00	4000.00
Concrete Density (lb/ft3)	150.00	150.00	150.00
Concrete Modulus Ec (ksi)	4266.22	4592.23	4266.22
Steel Strength Fy (ksi)	60.00	60.00	60.00

DESIGN PARAMETERS

Resistance factors for reinf. concrete

Flexure and tension	0.90
Shear and torsion (normal)	0.90
Shear and torsion (lightweight)	0.90
Axial compression (ties)	0.75
Axial compression (spiral)	0.75
Compression in STM	0.70

Multi presence factors for live load

1 Lane	1.20
2 Lanes	1.00
3 Lanes	0.85
4 Lanes	0.65
5 Lanes	0.65
6 Lanes	0.65

Dynamic load allowance IM

	Truck	Lane	Fatigue
Cap	0.33	0.00	0.15
Column	0.33	0.00	0.15
Footing	0.00	0.00	0.00

	Exposure factors	Clear cover in	Clear side cover in
Cap	1.00	2.00	2.00
Column	1.00	2.00	
Footing	1.00	3.00	3.00

Degree of fixity in foundations for Moment Magnify Method: Ga = 5.00

SEISMIC DESIGN PARAMETERS

Strength Reduction factors for reinf. Concrete Seismic Design

Tension controlled	0.90
Shear and torsion (normal)	0.90
Shear and torsion (lightweight)	0.70
Compression Controlled (ties)	0.75
Compression Controlled (spiral)	0.75

Seismic Overstrength

Flexure and tension	1.30
Axial compression (ties)	1.30
Axial compression (spiral)	1.30

Response Modification Factor	1.00

Use core area for plastic hinging calculations.

Design Factors

Cap Design Factor	1.20
Footing Design Factor	1.20

Plastic Hinge Moment

Use actual computed Plastic Hinging Moment for each column in all combinations.

LOADS

Pier Info:

Pier View:	Upstation.

Load Cases: 24

Longitudinal Reaction: Simple Span Distribution

Selected Vehicles:	Design Truck Design Truck + Lane Load Design Tandem + Lane Load Two Design Tandem + Lane Load Two Design Trucks + Lane Load

Tranverse Positioning

Number of loaded lanes	All combinations
Live Load Positions	Constant Spacing
Minimum Distance from Curb	2.000000
Center to Center Spacing	10.000000

Generate Braking/Longitudinal Force	Selected
Generate Centrifugal Force	Not Selected

Total number of Considered Truck Positions	6
Total number of Possible Combination	16

Loadcase ID: DC1 Name:

Multiplier = 1.000

Bearing loads

Line #	Bearing #	Dir	Load kips
1	1	Y	-1064.02
1	2	Y	-1064.02
1	3	Y	-1064.02
1	4	Y	-1064.02

Auto generation details:

Generated Dead Load

Imported vertical load from CIP RC/PT Girder module: 4256.06 kips
Imported moment from CIP RC/PT Girder module: -24377.90 k-ft

Loadcase ID: DW1 Name:

Multiplier = 1.000

Bearing loads

Line #	Bearing #	Dir	Load kips
1	1	Y	-19.88
1	2	Y	-18.58
1	3	Y	-18.58
1	4	Y	-19.88

Auto generation details:

Generated Dead Load

Slab weight = Not included
Girder weight = Not included
Wearing weight = 418.00 plf
Barrier load = Not included

Loadcase ID: LL1 Name:

Multiplier = 1.000

Bearing loads

Line #	Bearing #	Dir	Load kips	Lane Load
1	1	Y	-79.87	
1	2	Y	-147.36	
1	3	Y	-121.60	
1	4	Y	-64.07	
1	1	Y	-79.97	L
1	2	Y	-146.85	L
1	3	Y	-123.29	L
1	4	Y	-63.22	L

Auto generation details:

Generated Live Load

TRUCK IDENTIFICATION : Two Design Trucks + Lane Load
Positions of the center of each load measured from the left of the bridge :

TRUCK TYPE : Regular
Truck No. 1 - center line at: 72.43 - 3 axle on bearing line No. 1
Truck No. 2 - center line at: 56.57 - 3 axle on bearing line No. 1
Truck No. 3 - center line at: 46.57 - 3 axle on bearing line No. 1
Truck No. 4 - center line at: 36.57 - 3 axle on bearing line No. 1
Truck No. 5 - center line at: 26.57 - 3 axle on bearing line No. 1
Truck No. 6 - center line at: 16.57 - 3 axle on bearing line No. 1
Multi lane reduction factor used : 0.6500

Maximum effects in members :

Member 1	node 1	Fx = 962.4921
Member 1	node 2	Fx = -962.4921

Loadcase ID: LL2 Name:

Multiplier = 1.000

Bearing loads

Line #	Bearing #	Dir	Load kips	Lane Load
1	1	Y	-232.71	
1	2	Y	-37.26	
1	3	Y	0.00	
1	4	Y	0.00	
1	1	Y	-232.96	L
1	2	Y	-37.30	L
1	3	Y	0.00	L
1	4	Y	0.00	L

Auto generation details:

Generated Live Load

TRUCK IDENTIFICATION : Two Design Trucks + Lane Load
Positions of the center of each load measured from the left of the bridge :

TRUCK TYPE : Regular
Truck No. 1 - center line at: 26.57 - 3 axle on bearing line No. 1
Truck No. 2 - center line at: 16.57 - 3 axle on bearing line No. 1
Truck No. 3 - center line at: 6.57 - 3 axle on bearing line No. 1
Multi lane reduction factor used : 0.8500

Maximum effects in members :

Member 1	node 1	Mz = -17573.9375
Member 1	node 2	Mz = 17573.9375
Member 5	node 2	Mz = -17573.9375
Member 5	node 6	Mz = 12539.3633
Member 4	node 6	Mz = -12539.3633

Loadcase ID: LL3 Name:

Multiplier = 1.000

Bearing loads

Line #	Bearing #	Dir	Load kips	Lane Load
1	1	Y	0.00	
1	2	Y	0.00	
1	3	Y	-37.26	
1	4	Y	-232.71	
1	1	Y	0.00	L
1	2	Y	0.00	L
1	3	Y	-37.30	L
1	4	Y	-232.96	L

Auto generation details:

Generated Live Load

TRUCK IDENTIFICATION : Two Design Trucks + Lane Load
Positions of the center of each load measured from the left of the bridge :

TRUCK TYPE : Regular
Truck No. 1 - center line at: 82.43 - 3 axle on bearing line No. 1
Truck No. 2 - center line at: 72.43 - 3 axle on bearing line No. 1
Truck No. 3 - center line at: 62.43 - 3 axle on bearing line No. 1
Multi lane reduction factor used : 0.8500

Maximum effects in members :

Member 1	node 1	Mz = 17573.9355
Member 1	node 2	Mz = -17573.9355
Member 7	node 7	Mz = 12539.3613
Member 6	node 7	Mz = -12539.3613
Member 6	node 2	Mz = 17573.9355

Loadcase ID: LL4 Name:

Multiplier = 1.000

Bearing loads

Line #	Bearing #	Dir	Load kips	Lane Load
1	1	Y	0.00	
1	2	Y	0.00	
1	3	Y	54.04	
1	4	Y	-181.09	
1	1	Y	0.00	L
1	2	Y	0.00	L
1	3	Y	54.10	L
1	4	Y	-181.28	L

Auto generation details:

Generated Live Load

TRUCK IDENTIFICATION : Two Design Trucks + Lane Load
Positions of the center of each load measured from the left of the bridge :

TRUCK TYPE : Regular
Truck No. 1 - center line at: 82.43 - 3 axle on bearing line No. 1
Multi lane reduction factor used : 1.2000

Maximum effects in members :

Loadcase ID: LL5 Name:

Multiplier = 1.000

Bearing loads

Line #	Bearing #	Dir	Load kips	Lane Load
1	1	Y	0.00	
1	2	Y	0.00	
1	3	Y	30.42	
1	4	Y	-242.16	
1	1	Y	0.00	L
1	2	Y	0.00	L
1	3	Y	30.45	L
1	4	Y	-242.42	L

Auto generation details:

Generated Live Load

TRUCK IDENTIFICATION : Two Design Trucks + Lane Load
Positions of the center of each load measured from the left of the bridge :

TRUCK TYPE : Regular
Truck No. 1 - center line at: 82.43 - 3 axle on bearing line No. 1
Truck No. 2 - center line at: 72.43 - 3 axle on bearing line No. 1
Multi lane reduction factor used : 1.0000

Maximum effects in members :

Member 8	node 9	Fy = -564.5007
Member 8	node 8	Fy = 564.5007
Member 8	node 8	Mz = 10019.8867
Member 7	node 8	Mz = -10019.8867

Loadcase ID: LL6 Name:

Multiplier = 1.000

Bearing loads

Line #	Bearing #	Dir	Load kips	Lane Load
1	1	Y	-4.75	
1	2	Y	-112.10	
1	3	Y	-118.09	
1	4	Y	-177.96	
1	1	Y	-3.84	L
1	2	Y	-113.79	L
1	3	Y	-117.55	L
1	4	Y	-178.16	L

Auto generation details:

Generated Live Load

TRUCK IDENTIFICATION : Two Design Trucks + Lane Load
Positions of the center of each load measured from the left of the bridge :

TRUCK TYPE : Regular
Truck No. 1 - center line at: 82.43 - 3 axle on bearing line No. 1
Truck No. 2 - center line at: 72.43 - 3 axle on bearing line No. 1
Truck No. 3 - center line at: 62.43 - 3 axle on bearing line No. 1
Truck No. 4 - center line at: 52.43 - 3 axle on bearing line No. 1
Truck No. 5 - center line at: 42.43 - 3 axle on bearing line No. 1
Truck No. 6 - center line at: 32.43 - 3 axle on bearing line No. 1
Multi lane reduction factor used : 0.6500

Maximum effects in members :

Member 7	node 8	Fy = -689.4537
Member 7	node 7	Fy = 689.4537
Member 6	node 7	Fy = -689.4537
Member 6	node 2	Fy = 689.4537

Loadcase ID: LL7 Name:

Multiplier = 1.000

Bearing loads

Line #	Bearing #	Dir	Load kips	Lane Load
1	1	Y	-177.96	
1	2	Y	-118.09	
1	3	Y	-112.10	
1	4	Y	-4.75	
1	1	Y	-178.16	L
1	2	Y	-117.55	L
1	3	Y	-113.79	L
1	4	Y	-3.84	L

Auto generation details:

Generated Live Load

TRUCK IDENTIFICATION : Two Design Trucks + Lane Load
Positions of the center of each load measured from the left of the bridge :

TRUCK TYPE : Regular
Truck No. 1 - center line at: 56.57 - 3 axle on bearing line No. 1
Truck No. 2 - center line at: 46.57 - 3 axle on bearing line No. 1
Truck No. 3 - center line at: 36.57 - 3 axle on bearing line No. 1
Truck No. 4 - center line at: 26.57 - 3 axle on bearing line No. 1
Truck No. 5 - center line at: 16.57 - 3 axle on bearing line No. 1
Truck No. 6 - center line at: 6.57 - 3 axle on bearing line No. 1
Multi lane reduction factor used : 0.6500

Maximum effects in members :

Member 5	node 2	Fy = 689.4538
Member 5	node 6	Fy = -689.4538
Member 4	node 6	Fy = 689.4538
Member 4	node 5	Fy = -689.4538

Loadcase ID: LL8 Name:

Multiplier = 1.000

Bearing loads

Line #	Bearing #	Dir	Load kips	Lane Load
1	1	Y	-242.16	
1	2	Y	30.42	
1	3	Y	0.00	
1	4	Y	0.00	
1	1	Y	-242.42	L
1	2	Y	30.45	L
1	3	Y	0.00	L
1	4	Y	0.00	L

Auto generation details:

Generated Live Load

TRUCK IDENTIFICATION : Two Design Trucks + Lane Load
Positions of the center of each load measured from the left of the bridge :

TRUCK TYPE : Regular
Truck No. 1 - center line at: 16.57 - 3 axle on bearing line No. 1
Truck No. 2 - center line at: 6.57 - 3 axle on bearing line No. 1
Multi lane reduction factor used : 1.0000

Maximum effects in members :

Member 4	node 5	Mz = 10019.8896
Member 3	node 5	Fy = 564.5008
Member 3	node 5	Mz = -10019.8896
Member 3	node 4	Fy = -564.5008

Loadcase ID: LL9 Name:

Multiplier = 1.000

Bearing loads

Line #	Bearing #	Dir	Load kips	Lane Load
1	1	Y	-181.09	
1	2	Y	54.04	
1	3	Y	0.00	
1	4	Y	0.00	
1	1	Y	-181.28	L
1	2	Y	54.10	L
1	3	Y	0.00	L
1	4	Y	0.00	L

Auto generation details:

Generated Live Load

TRUCK IDENTIFICATION : Two Design Trucks + Lane Load
Positions of the center of each load measured from the left of the bridge :

TRUCK TYPE : Regular
Truck No. 1 - center line at: 6.57 - 3 axle on bearing line No. 1
Multi lane reduction factor used : 1.2000

Maximum effects in members :

Loadcase ID: BR1 Name:

Multiplier = 1.000

Cap loads

Type	Dir	Arm ft	Mag1	x1/L	Mag2	x2/L
Moment	X		-1053.00 k-ft	0.50		

Bearing loads

Line #	Bearing #	Dir	Load kips
1	1	Z	-17.55
1	2	Z	-17.55
1	3	Z	-17.55
1	4	Z	-17.55

Auto generation details:

Selected Live Load for BR generation

Load: Design Truck
Load: Design Truck + Lane Load
Load: Design Tandem + Lane Load
Load: Two Design Tandem + Lane Load
Load: Two Design Trucks + Lane Load
Number of loaded lanes = 6
Contributing longitudinal length = 184.00 ft

Loadcase ID: BR2 Name:

Multiplier = 1.000

Cap loads

Type	Dir	Arm ft	Mag1	x1/L	Mag2	x2/L
Moment	X		-688.50 k-ft	0.50		

Bearing loads

Line #	Bearing #	Dir	Load kips
1	1	Z	-11.48
1	2	Z	-11.48
1	3	Z	-11.48
1	4	Z	-11.48

Auto generation details:

Selected Live Load for BR generation

Load: Design Truck
Load: Design Truck + Lane Load
Load: Design Tandem + Lane Load
Load: Two Design Tandem + Lane Load
Load: Two Design Trucks + Lane Load
Number of loaded lanes = 3
Contributing longitudinal length = 184.00 ft

Loadcase ID: BR3 Name:

Multiplier = 1.000

Cap loads

Type	Dir	Arm ft	Mag1	x1/L	Mag2	x2/L
Moment	X		-688.50 k-ft	0.50		

Bearing loads

Line #	Bearing #	Dir	Load kips
1	1	Z	-11.48
1	2	Z	-11.48
1	3	Z	-11.48
1	4	Z	-11.48

Auto generation details:

Selected Live Load for BR generation

Load: Design Truck
Load: Design Truck + Lane Load
Load: Design Tandem + Lane Load
Load: Two Design Tandem + Lane Load
Load: Two Design Trucks + Lane Load
Number of loaded lanes = 3
Contributing longitudinal length = 184.00 ft

Loadcase ID: BR4 Name:

Multiplier = 1.000

Cap loads

Type	Dir	Arm ft	Mag1	x1/L	Mag2	x2/L
Moment	X		-324.00 k-ft	0.50		

Bearing loads

Line #	Bearing #	Dir	Load kips
1	1	Z	-5.40
1	2	Z	-5.40
1	3	Z	-5.40
1	4	Z	-5.40

Auto generation details:

Selected Live Load for BR generation

Load: Design Truck
Load: Design Truck + Lane Load
Load: Design Tandem + Lane Load
Load: Two Design Tandem + Lane Load
Load: Two Design Trucks + Lane Load
Number of loaded lanes = 1
Contributing longitudinal length = 184.00 ft

Loadcase ID: BR5 Name:

Multiplier = 1.000

Cap loads

Type	Dir	Arm ft	Mag1	x1/L	Mag2	x2/L
Moment	X		-540.00 k-ft	0.50		

Bearing loads

Line #	Bearing #	Dir	Load kips
1	1	Z	-9.00
1	2	Z	-9.00
1	3	Z	-9.00
1	4	Z	-9.00

Auto generation details:

Selected Live Load for BR generation

Load: Design Truck
Load: Design Truck + Lane Load
Load: Design Tandem + Lane Load
Load: Two Design Tandem + Lane Load
Load: Two Design Trucks + Lane Load
Number of loaded lanes = 2
Contributing longitudinal length = 184.00 ft

Loadcase ID: BR6 Name:

Multiplier = 1.000

Cap loads

Type	Dir	Arm ft	Mag1	x1/L	Mag2	x2/L
Moment	X		-1053.00 k-ft	0.50		

Bearing loads

Line #	Bearing #	Dir	Load kips
1	1	Z	-17.55
1	2	Z	-17.55
1	3	Z	-17.55
1	4	Z	-17.55

Auto generation details:

Selected Live Load for BR generation

Load: Design Truck
Load: Design Truck + Lane Load
Load: Design Tandem + Lane Load
Load: Two Design Tandem + Lane Load
Load: Two Design Trucks + Lane Load
Number of loaded lanes = 6
Contributing longitudinal length = 184.00 ft

Loadcase ID: BR7 Name:

Multiplier = 1.000

Cap loads

Type	Dir	Arm ft	Mag1	x1/L	Mag2	x2/L
Moment	X		-1053.00 k-ft	0.50		

Bearing loads

Line #	Bearing #	Dir	Load kips
1	1	Z	-17.55
1	2	Z	-17.55
1	3	Z	-17.55
1	4	Z	-17.55

Auto generation details:

Selected Live Load for BR generation

Load: Design Truck
Load: Design Truck + Lane Load
Load: Design Tandem + Lane Load
Load: Two Design Tandem + Lane Load
Load: Two Design Trucks + Lane Load
Number of loaded lanes = 6
Contributing longitudinal length = 184.00 ft

Loadcase ID: BR8 Name:

Multiplier = 1.000

Cap loads

Type	Dir	Arm ft	Mag1	x1/L	Mag2	x2/L
Moment	X		-540.00 k-ft	0.50		

Bearing loads

Line #	Bearing #	Dir	Load kips
1	1	Z	-9.00
1	2	Z	-9.00
1	3	Z	-9.00
1	4	Z	-9.00

Auto generation details:

Selected Live Load for BR generation

Load: Design Truck
Load: Design Truck + Lane Load
Load: Design Tandem + Lane Load
Load: Two Design Tandem + Lane Load
Load: Two Design Trucks + Lane Load
Number of loaded lanes = 2
Contributing longitudinal length = 184.00 ft

Loadcase ID: BR9 Name:

Multiplier = 1.000

Cap loads

Type	Dir	Arm ft	Mag1	x1/L	Mag2	x2/L
Moment	X		-324.00 k-ft	0.50		

Bearing loads

Line #	Bearing #	Dir	Load kips
1	1	Z	-5.40
1	2	Z	-5.40
1	3	Z	-5.40
1	4	Z	-5.40

Auto generation details:

Selected Live Load for BR generation

Load: Design Truck
Load: Design Truck + Lane Load
Load: Design Tandem + Lane Load
Load: Two Design Tandem + Lane Load
Load: Two Design Trucks + Lane Load
Number of loaded lanes = 1
Contributing longitudinal length = 184.00 ft

Loadcase ID: WS1 Name: STR V & SER I-Angle: 0

Multiplier = 1.000

Cap loads

Type	Dir	Arm ft	Mag1	x1/L	Mag2	x2/L
Force	X	0.00	-1.98 kips	0.50		

Column loads

Col #	Type	Dir	Mag1	y1/L	Mag2	y2/L
1	UDL	X	-0.159 klf	0.00		0.78

Bearing loads

Line #	Bearing #	Dir	Load kips
1	1	X	-7.38
1	1	Y	-2.99
1	1	Z	-0.00
1	2	X	-7.38
1	2	Y	-0.00
1	2	Z	-0.00
1	3	X	-7.38
1	3	Y	-0.00
1	3	Z	-0.00
1	4	X	-7.38
1	4	Y	2.99
1	4	Z	-0.00

Auto generation details:

Generated Wind Load on Structure

Angle of wind = 0.00 deg Elevation above which wind load acts = 56.00 ft Modified design wind pressure, Pz: For STR V and SER I Pz,sup 13.020 psf Pz,sub 15.870 psf	For STR III and SER IV Pz,sup 59.780 psf Pz,sub 72.850 psf Overturning not considered

Loadcase ID: WS2 Name: STR III-Angle: 0

Multiplier = 1.000

Cap loads

Type	Dir	Arm ft	Mag1	x1/L	Mag2	x2/L
Force	X	0.00	-9.11 kips	0.50		

Column loads

Col #	Type	Dir	Mag1	y1/L	Mag2	y2/L
1	UDL	X	-0.729 klf	0.00		0.34

Bearing loads

Line #	Bearing #	Dir	Load kips
1	1	X	-33.88
1	1	Y	-13.74
1	1	Z	-0.00
1	2	X	-33.88
1	2	Y	-0.00
1	2	Z	-0.00
1	3	X	-33.88
1	3	Y	-0.00
1	3	Z	-0.00
1	4	X	-33.88
1	4	Y	13.74
1	4	Z	-0.00

Auto generation details:

Generated Wind Load on Structure

Angle of wind = 0.00 deg Elevation above which wind load acts = 56.00 ft Modified design wind pressure, Pz:	
For STR V and SER I Pz,sup 13.020 psf Pz,sub 15.870 psf	For STR III and SER IV Pz,sup 59.780 psf Pz,sub 72.850 psf Overturning not considered

Loadcase ID: WS3 Name: SER IV-Angle: 0

Multiplier = 1.000

Cap loads

Type	Dir	Arm ft	Mag1	x1/L	Mag2	x2/L
Force	X	0.00	-9.11 kips	0.50		

Column loads

Col #	Type	Dir	Mag1	y1/L	Mag2	y2/L
1	UDL	X	-0.159 klf	0.00		0.22

Bearing loads

Line #	Bearing #	Dir	Load kips
1	1	X	-33.88
1	1	Y	-13.74
1	1	Z	-0.00
1	2	X	-33.88
1	2	Y	-0.00
1	2	Z	-0.00
1	3	X	-33.88
1	3	Y	-0.00
1	3	Z	-0.00
1	4	X	-33.88
1	4	Y	13.74
1	4	Z	-0.00

Auto generation details:

Generated Wind Load on Structure

Angle of wind = 0.00 deg Elevation above which wind load acts = 56.00 ft Modified design wind pressure, Pz: For STR V and SER I Pz,sup 13.020 psf Pz,sub 15.870 psf	For STR III and SER IV Pz,sup 59.780 psf Pz,sub 72.850 psf Overturning not considered

Loadcase ID: WL1 Name: Angle: 0

Multiplier = 1.000

Bearing loads

Line #	Bearing #	Dir	Load kips
1	1	X	-4.60
1	1	Y	-4.54
1	1	Z	-0.00
1	2	X	-4.60
1	2	Y	-0.00
1	2	Z	-0.00
1	3	X	-4.60
1	3	Y	-0.00
1	3	Z	-0.00
1	4	X	-4.60
1	4	Y	4.54
1	4	Z	-0.00

Auto generation details:

Generated Wind Load on Live Load

Angle of wind = 0.00 deg Live load length = 184.00 ft

Selected load groups

STRENGTH GROUP I
STRENGTH GROUP II
FDOT STRENGTH GROUP III
FDOT STRENGTH GROUP V
FDOT SERVICE GROUP I
FDOT SERVICE GROUP IV
FATIGUE I

COMBINATIONS

FOOTING DESIGN

ISOLATED FOOTING DESIGN

Code: AASHTO LRFD 8
Units: US
Pier View: Upstation.

GEOMETRY

Name : FTG01
Shape : Rectangular, Type : Pile/Shaft Cap
Bf(X) = 34.00 ft, Hf(Z) = 34.00 ft, Thickness(Y) = 72.00 in
Ag = 1156.00 ft^2, Ix = 4900.00 ft^2, Iz = 4900.00 ft^2
Footing concentric.
Columns located on the footing:
Column No. 1 at x = 0.00 ft, Rectangular 192.00 in x 120.00 in
Piles: Round Size: W = 20.00 in
Service Capacity: 330.00 kips
Factored Capacity: 330.00 kips
Lateral Resistance: 0.00 kips
Piles Section Properties: Area = 2.18 ft^2 Ix = 7853.98 in^4 Iz = 7853.98 in^4
Pile Pattern Name: n7x7
Pile Pattern concentric.
Pile Pattern Type: Grid-based
Number of Piles: 49
Grid distances:
X1 = 180.000
X2 = 120.000
X3 = 60.000
Z1 = 180.000
Z2 = 120.000
Z3 = 60.000
1 1 1 1 1 1 1
1 1 1 1 1 1 1
1 1 1 1 1 1 1
1 1 1 1 1 1 1
1 1 1 1 1 1 1
1 1 1 1 1 1 1
1 1 1 1 1 1 1

DESIGN PARAMETERS

f'c = 4000.00 psi	fy = 60000.00 psi
phi tens = 0.90	
phi comp = 0.75	phi shear = 0.90
Tens above = 0.005	Comp below = 0.002
Ec = 4266.2 ksi	Es = 29000.0 ksi
Crack check as per current LRFD	
Crack control Exposure = 1.00	
Concrete Type : Normal Weight.	

Reinforcement Schedule

Dir	Quantity	Size	Bar dist. in	As total in^2	Spacing in	Hook
X	93	US#8[M25]	15.50	73.47	5.14	None
X	26	US#8[M25]	68.50	20.54	18.92	None
Z	160	US#8[M25]	16.50	126.40	2.52	None
Z	26	US#8[M25]	67.50	20.54	16.04	None

Bentley			Sheet #	31
			Job #	
Program:	LEAP® Bridge Concrete CONNECT Edition	BASE Consultants	Designed	KV
Module:	Substructure	Copyright © Bentley Systems, Inc. 2016	Date	2/25/2021
Version:	20.00.00.46	www.bentley.com Phone: 1-800-778-4277	Checked	RK
File Name:	**boxgirder-3span-138-230-138.lbcx**		Date	Feb/25/2021

Pile Reactions, Service Load Effect @ Footing Bot.

Pile	X in	Z in	Batter X degree	Batter Z degree	comb	Ovs	P kips	Mxx kft	Mzz kft	Pile Reac. kips
1	24.00	-180.0	0	0	374	1.000	-7885.35	-3121.20	18311.07	226.53
					438	1.000	-7885.35	3121.20	-18311.07	95.32
2	84.00	-180.0	0	0	379	1.000	-8171.36	-4773.60	13904.27	209.75
					438	1.000	-7885.35	3121.20	-18311.07	114.00
3	144.00	-180.0	0	0	379	1.000	-8171.36	-4773.60	13904.27	195.56
					438	1.000	-7885.35	3121.20	-18311.07	132.69
4	204.00	-180.0	0	0	373	1.000	-8171.36	-4773.60	4836.28	181.38
					445	1.000	-7345.12	0.00	5096.97	149.90
5	264.00	-180.0	0	0	432	1.000	-8171.36	-4773.60	-13904.27	195.56
					383	1.000	-7885.35	3121.20	18311.07	132.69
6	324.00	-180.0	0	0	432	1.000	-8171.36	-4773.60	-13904.27	209.75
					383	1.000	-7885.35	3121.20	18311.07	114.00
7	384.00	-180.0	0	0	429	1.000	-7885.35	-3121.20	-18311.07	226.53
					383	1.000	-7885.35	3121.20	18311.07	95.32
8	24.00	-120.0	0	0	374	1.000	-7885.35	-3121.20	18311.07	223.35
					438	1.000	-7885.35	3121.20	-18311.07	98.50
9	84.00	-120.0	0	0	379	1.000	-8171.36	-4773.60	13904.27	204.88
					438	1.000	-7885.35	3121.20	-18311.07	117.19
10	144.00	-120.0	0	0	379	1.000	-8171.36	-4773.60	13904.27	190.69
					438	1.000	-7885.35	3121.20	-18311.07	135.87
11	204.00	-120.0	0	0	373	1.000	-8171.36	-4773.60	4836.28	176.50
					445	1.000	-7345.12	0.00	5096.97	149.90
12	264.00	-120.0	0	0	432	1.000	-8171.36	-4773.60	-13904.27	190.69
					383	1.000	-7885.35	3121.20	18311.07	135.87
13	324.00	-120.0	0	0	432	1.000	-8171.36	-4773.60	-13904.27	204.88
					383	1.000	-7885.35	3121.20	18311.07	117.19
14	384.00	-120.0	0	0	429	1.000	-7885.35	-3121.20	-18311.07	223.35
					383	1.000	-7885.35	3121.20	18311.07	98.50
15	24.00	-60.0	0	0	374	1.000	-7885.35	-3121.20	18311.07	220.16
					438	1.000	-7885.35	3121.20	-18311.07	101.69
16	84.00	-60.0	0	0	374	1.000	-7885.35	-3121.20	18311.07	201.48
					438	1.000	-7885.35	3121.20	-18311.07	120.37
17	144.00	-60.0	0	0	379	1.000	-8171.36	-4773.60	13904.27	185.82
					440	1.000	-7768.83	2448.00	-17175.77	138.52
18	204.00	-60.0	0	0	373	1.000	-8171.36	-4773.60	4836.28	171.63
					445	1.000	-7345.12	0.00	5096.97	149.90
19	264.00	-60.0	0	0	432	1.000	-8171.36	-4773.60	-13904.27	185.82
					389	1.000	-7768.83	2448.00	17175.77	138.52
20	324.00	-60.0	0	0	429	1.000	-7885.35	-3121.20	-18311.07	201.48
					383	1.000	-7885.35	3121.20	18311.07	120.37
21	384.00	-60.0	0	0	429	1.000	-7885.35	-3121.20	-18311.07	220.16
					383	1.000	-7885.35	3121.20	18311.07	101.69
22	24.00	0.0	0	0	374	1.000	-7885.35	-3121.20	18311.07	216.98
					429	1.000	-7885.35	-3121.20	-18311.07	104.87
23	84.00	0.0	0	0	374	1.000	-7885.35	-3121.20	18311.07	198.30
					431	1.000	-7768.83	-2448.00	-17175.77	123.50
24	144.00	0.0	0	0	379	1.000	-8171.36	-4773.60	13904.27	180.95
					431	1.000	-7768.83	-2448.00	-17175.77	141.02
25	204.00	0.0	0	0	373	1.000	-8171.36	-4773.60	4836.28	166.76
					445	1.000	-7345.12	0.00	5096.97	149.90
26	264.00	0.0	0	0	432	1.000	-8171.36	-4773.60	-13904.27	180.95
					380	1.000	-7768.83	-2448.00	17175.77	141.02
27	324.00	0.0	0	0	429	1.000	-7885.35	-3121.20	-18311.07	198.30
					380	1.000	-7768.83	-2448.00	17175.77	123.50
28	384.00	0.0	0	0	429	1.000	-7885.35	-3121.20	-18311.07	216.98
					374	1.000	-7885.35	-3121.20	18311.07	104.87
29	24.00	60.0	0	0	383	1.000	-7885.35	3121.20	18311.07	220.16
					429	1.000	-7885.35	-3121.20	-18311.07	101.69

Pile	X in	Z in	Batter X degree	Batter Z degree	comb	Ovs	P kips	Mxx kft	Mzz kft	Pile Reac. kips
	84.00	60.0	0	0	383	1.000	-7885.35	3121.20	18311.07	201.48
					429	1.000	-7885.35	-3121.20	-18311.07	120.37
31	144.00	60.0	0	0	388	1.000	-8171.36	4773.60	13904.27	185.82
					431	1.000	-7768.83	-2448.00	-17175.77	138.52
32	204.00	60.0	0	0	382	1.000	-8171.36	4773.60	4836.28	171.63
					445	1.000	-7345.12	0.00	5096.97	149.90
33	264.00	60.0	0	0	441	1.000	-8171.36	4773.60	-13904.27	185.82
					380	1.000	-7768.83	-2448.00	17175.77	138.52
34	324.00	60.0	0	0	438	1.000	-7885.35	3121.20	-18311.07	201.48
					374	1.000	-7885.35	-3121.20	18311.07	120.37
35	384.00	60.0	0	0	438	1.000	-7885.35	3121.20	-18311.07	220.16
					374	1.000	-7885.35	-3121.20	18311.07	101.69
36	24.00	120.0	0	0	383	1.000	-7885.35	3121.20	18311.07	223.35
					429	1.000	-7885.35	-3121.20	-18311.07	98.50
37	84.00	120.0	0	0	388	1.000	-8171.36	4773.60	13904.27	204.88
					429	1.000	-7885.35	-3121.20	-18311.07	117.19
38	144.00	120.0	0	0	388	1.000	-8171.36	4773.60	13904.27	190.69
					429	1.000	-7885.35	-3121.20	-18311.07	135.87
39	204.00	120.0	0	0	382	1.000	-8171.36	4773.60	4836.28	176.50
					445	1.000	-7345.12	0.00	5096.97	149.90
40	264.00	120.0	0	0	441	1.000	-8171.36	4773.60	-13904.27	190.69
					374	1.000	-7885.35	-3121.20	18311.07	135.87
41	324.00	120.0	0	0	441	1.000	-8171.36	4773.60	-13904.27	204.88
					374	1.000	-7885.35	-3121.20	18311.07	117.19
42	384.00	120.0	0	0	438	1.000	-7885.35	3121.20	-18311.07	223.35
					374	1.000	-7885.35	-3121.20	18311.07	98.50
43	24.00	180.0	0	0	383	1.000	-7885.35	3121.20	18311.07	226.53
					429	1.000	-7885.35	-3121.20	-18311.07	95.32
44	84.00	180.0	0	0	388	1.000	-8171.36	4773.60	13904.27	209.75
					429	1.000	-7885.35	-3121.20	-18311.07	114.00
45	144.00	180.0	0	0	388	1.000	-8171.36	4773.60	13904.27	195.56
					429	1.000	-7885.35	-3121.20	-18311.07	132.69
46	204.00	180.0	0	0	382	1.000	-8171.36	4773.60	4836.28	181.38
					445	1.000	-7345.12	0.00	5096.97	149.90
47	264.00	180.0	0	0	441	1.000	-8171.36	4773.60	-13904.27	195.56
					374	1.000	-7885.35	-3121.20	18311.07	132.69
48	324.00	180.0	0	0	441	1.000	-8171.36	4773.60	-13904.27	209.75
					374	1.000	-7885.35	-3121.20	18311.07	114.00
49	384.00	180.0	0	0	438	1.000	-7885.35	3121.20	-18311.07	226.53
					374	1.000	-7885.35	-3121.20	18311.07	95.32

Pile Reactions, Factored **Load Effect @ Footing Bot.**

Pile	X in	Z in	Batter X degree	Batter Z degree	comb	Ovs	P kips	Mxx kft	Mzz kft	Pile Reac. kips
1	24.0	-180.0	0	0	2	---	-10146.04	-5462.10	26400.61	304.60
					66	---	-7536.79	5462.10	-26400.61	56.27
2	84.0	-180.0	0	0	7	---	-10646.54	-8353.80	18688.71	280.99
					66	---	-7536.79	5462.10	-26400.61	83.21
3	144.0	-180.0	0	0	7	---	-10646.54	-8353.80	18688.71	261.92
					66	---	-7536.79	5462.10	-26400.61	110.15
4	204.0	-180.0	0	0	1	---	-10646.54	-8353.80	2819.72	242.85
					76	---	-6591.38	0.00	-0.00	134.52
5	264.0	-180.0	0	0	6	---	-10646.54	-8353.80	-18688.70	261.92
					65	---	-7536.79	5462.10	26400.61	110.15
6	324.0	-180.0	0	0	6	---	-10646.54	-8353.80	-18688.70	280.99
					65	---	-7536.79	5462.10	26400.61	83.21
7	384.0	-180.0	0	0	3	---	-10146.04	-5462.10	-26400.61	304.60
					65	---	-7536.79	5462.10	26400.61	56.27
8	24.0	-120.0	0	0	2	---	-10146.04	-5462.10	26400.61	299.03
					66	---	-7536.79	5462.10	-26400.61	61.85
9	84.0	-120.0	0	0	7	---	-10646.54	-8353.80	18688.71	272.47
					66	---	-7536.79	5462.10	-26400.61	88.79
10	144.0	-120.0	0	0	7	---	-10646.54	-8353.80	18688.71	253.40
					66	---	-7536.79	5462.10	-26400.61	115.73
11	204.0	-120.0	0	0	1	---	-10646.54	-8353.80	2819.72	234.32
					76	---	-6591.38	0.00	-0.00	134.52
12	264.0	-120.0	0	0	6	---	-10646.54	-8353.80	-18688.70	253.40
					65	---	-7536.79	5462.10	26400.61	115.73
13	324.0	-120.0	0	0	6	---	-10646.54	-8353.80	-18688.70	272.47
					65	---	-7536.79	5462.10	26400.61	88.79
14	384.0	-120.0	0	0	3	---	-10146.04	-5462.10	-26400.61	299.03
					65	---	-7536.79	5462.10	26400.61	61.85
15	24.0	-60.0	0	0	2	---	-10146.04	-5462.10	26400.61	293.45
					66	---	-7536.79	5462.10	-26400.61	67.42
16	84.0	-60.0	0	0	2	---	-10146.04	-5462.10	26400.61	266.51
					66	---	-7536.79	5462.10	-26400.61	94.36
17	144.0	-60.0	0	0	7	---	-10646.54	-8353.80	18688.71	244.87
					368	---	-7163.39	3304.80	-22650.67	119.71
18	204.0	-60.0	0	0	1	---	-10646.54	-8353.80	2819.72	225.80
					76	---	-6591.38	0.00	-0.00	134.52
19	264.0	-60.0	0	0	6	---	-10646.54	-8353.80	-18688.70	244.87
					317	---	-7163.39	3304.80	22650.68	119.71
20	324.0	-60.0	0	0	3	---	-10146.04	-5462.10	-26400.61	266.51
					65	---	-7536.79	5462.10	26400.61	94.36
21	384.0	-60.0	0	0	3	---	-10146.04	-5462.10	-26400.61	293.45
					65	---	-7536.79	5462.10	26400.61	67.42
22	24.0	0.0	0	0	2	---	-10146.04	-5462.10	26400.61	287.88
					57	---	-7536.79	-5462.10	-26400.61	72.99
23	84.0	0.0	0	0	2	---	-10146.04	-5462.10	26400.61	260.94
					59	---	-7332.88	-4284.00	-24413.82	99.83
24	144.0	0.0	0	0	7	---	-10646.54	-8353.80	18688.71	236.35
					84	---	-6591.38	0.00	-12081.64	122.19
25	204.0	0.0	0	0	1	---	-10646.54	-8353.80	2819.72	217.28
					76	---	-6591.38	0.00	-0.00	134.52
26	264.0	0.0	0	0	6	---	-10646.54	-8353.80	-18688.70	236.35
					83	---	-6591.38	0.00	12081.64	122.19
27	324.0	0.0	0	0	3	---	-10146.04	-5462.10	-26400.61	260.94
					62	---	-7332.88	-4284.00	24413.83	99.83
28	384.0	0.0	0	0	3	---	-10146.04	-5462.10	-26400.61	287.88
					56	---	-7536.79	-5462.10	26400.61	72.99
29	24.0	60.0	0	0	11	---	-10146.04	5462.10	26400.61	293.45
					57	---	-7536.79	-5462.10	-26400.61	67.42

Pile	X in	Z in	Batter X degree	Batter Z degree	comb	Ovs	P kips	Mxx kft	Mzz kft	Pile Reac. kips
	84.0	60.0	0	0	11	---	-10146.04	5462.10	26400.61	266.51
					57	---	-7536.79	-5462.10	-26400.61	94.36
31	144.0	60.0	0	0	16	---	-10646.54	8353.80	18688.71	244.87
					359	---	-7163.39	-3304.80	-22650.67	119.71
32	204.0	60.0	0	0	10	---	-10646.54	8353.80	2819.72	225.80
					76	---	-6591.38	0.00	-0.00	134.52
33	264.0	60.0	0	0	15	---	-10646.54	8353.80	-18688.70	244.87
					308	---	-7163.39	-3304.80	22650.68	119.71
34	324.0	60.0	0	0	12	---	-10146.04	5462.10	-26400.61	266.51
					56	---	-7536.79	-5462.10	26400.61	94.36
35	384.0	60.0	0	0	12	---	-10146.04	5462.10	-26400.61	293.45
					56	---	-7536.79	-5462.10	26400.61	67.42
36	24.0	120.0	0	0	11	---	-10146.04	5462.10	26400.61	299.03
					57	---	-7536.79	-5462.10	-26400.61	61.85
37	84.0	120.0	0	0	16	---	-10646.54	8353.80	18688.71	272.47
					57	---	-7536.79	-5462.10	-26400.61	88.79
38	144.0	120.0	0	0	16	---	-10646.54	8353.80	18688.71	253.40
					57	---	-7536.79	-5462.10	-26400.61	115.73
39	204.0	120.0	0	0	10	---	-10646.54	8353.80	2819.72	234.32
					76	---	-6591.38	0.00	-0.00	134.52
40	264.0	120.0	0	0	15	---	-10646.54	8353.80	-18688.70	253.40
					56	---	-7536.79	-5462.10	26400.61	115.73
41	324.0	120.0	0	0	15	---	-10646.54	8353.80	-18688.70	272.47
					56	---	-7536.79	-5462.10	26400.61	88.79
42	384.0	120.0	0	0	12	---	-10146.04	5462.10	-26400.61	299.03
					56	---	-7536.79	-5462.10	26400.61	61.85
43	24.0	180.0	0	0	11	---	-10146.04	5462.10	26400.61	304.60
					57	---	-7536.79	-5462.10	-26400.61	56.27
44	84.0	180.0	0	0	16	---	-10646.54	8353.80	18688.71	280.99
					57	---	-7536.79	-5462.10	-26400.61	83.21
45	144.0	180.0	0	0	16	---	-10646.54	8353.80	18688.71	261.92
					57	---	-7536.79	-5462.10	-26400.61	110.15
46	204.0	180.0	0	0	10	---	-10646.54	8353.80	2819.72	242.85
					76	---	-6591.38	0.00	-0.00	134.52
47	264.0	180.0	0	0	15	---	-10646.54	8353.80	-18688.70	261.92
					56	---	-7536.79	-5462.10	26400.61	110.15
48	324.0	180.0	0	0	15	---	-10646.54	8353.80	-18688.70	280.99
					56	---	-7536.79	-5462.10	26400.61	83.21
49	384.0	180.0	0	0	12	---	-10146.04	5462.10	-26400.61	304.60
					56	---	-7536.79	-5462.10	26400.61	56.27

Pile Reactions: Notes

Load effects on pile are calculated at centroid of the bottom of the footing.
Both the max. and min. pile reaction are reported for each individual pile.
Positive pile reaction represents pile subject to compression load; negative pile reaction represents pile subject to uplift.
Coordinate system of pile layout see Geometry Tab>Footing Pile>Edit Pile.

Pile Lateral Resistance Check X

Controlling load combination number	83
Lateral loads on all piles(kips)	218.072
Batter angle(deg)	0.000
Available lateral resistance due to batter(kips)	0.000
Direct shear resistance of all piles(kips)	0.000
Total pile lateral resistance(kips)	0.000
Is the lateral resistance due to batter greater than lateral load on all piles?	NO
Is the total pile lateral resistance greater than the lateral load on all piles?	NO

Pile Lateral Resistance Check Z

Controlling load combination number	55
Lateral loads on all piles(kips)	122.850
Batter angle(deg)	0.000
Available lateral resistance due to batter(kips)	0.000
Direct shear resistance of all piles(kips)	0.000
Total pile lateral resistance(kips)	0.000
Is the lateral resistance due to batter greater than lateral load on all piles?	NO
Is the total pile lateral resistance greater than the lateral load on all piles?	NO

Max. Pile Reaction Used in Design:

Factored pile reaction	304.60 kips	Comb 2
Service pile reaction	226.53 kips	Comb 374

Flexure

Dir	Loc ft	d in	Mmax kft	Comb	CL	Asb_req in^2	Asb_prv in^2	Asb_eff in^2	Ast_req in^2	Ast_prv in^2	Ast_eff in^2
X	-8.00	56.50	18074.5	2	T	73.14	73.47	73.47	20.40	20.54	20.54
X	8.00	56.50	18074.5	2	T	73.14	73.47	73.47	20.40	20.54	20.54
Z	-5.00	55.50	30000.2	2	T	126.34	126.40	126.40	20.40	20.54	20.54
Z	5.00	55.50	30000.2	2	T	126.34	126.40	126.40	20.40	20.54	20.54

Flexure Note

CL: Section classification as per LRFD 2006 interims for provided reinforcement.
C = Compression controlled, I = In-Transition, T = Tension controlled.
Required reinforcement is based on phi for tension controlled sections..

Crack control and fatigue check

Cracking/Fatigue

Dir	Loc ft	d in	Service Mmax kft	Service Comb	Service fs ksi	Service Srq in	Service Spr in	Fatigue fs ksi	Fatigue FTH ksi
X	-8.00	56.50	13032.4	374	40.10**	13.5	4.4	0.00	0.00
X	8.00	56.50	13032.4	374	40.10**	13.5	4.4	0.00	0.00
Z	-5.00	55.50	21582.9	374	40.05**	13.5	2.5	0.00	0.00
Z	5.00	55.50	21582.9	374	40.05**	13.5	2.5	0.00	0.00

Cracking/Fatigue Note

** Stress (fs) is higher than steel yield strength (0.6*fy).

NOTE: PRELIMINARY CALCULATIONS ARE TO DETERMINE PILE LOADS. VALUES IN RED WILL BE ADDRESSED IN FINAL PIER DESIGN.

One Way Shear (Beta-Theta Method)

Col	Dir	Dist ft	Comb	dv in	Vu kips	Mu kft	theta deg	beta	phi*Vc kips
1	X	-12.61	2	55.34	2011.3	14660.2	40.66	1.37	1763.5 *
	X	12.61	2	55.3	2011.3	14660.2	40.66	1.37	1763.5 *
	Z	-9.40	2	52.77	3859.4	31187.1	39.46	1.48	1815.0 *
	Z	9.40	2	52.77	3859.4	31187.2	39.46	1.48	1815.0 *

One Way Shear Note

* Shear resistance is less than applied shear force. You may increase the footing depth or provide stirrups.

Two Way Shear

#	Bo ft	Ao ft^2	Comb	Avg. dv in	Vu kips	phi*Vc kips
Columns 1	70.02	297.40	2	54.05	10356.4*	10300.1
Piles - max 9	19.39	29.91	2	54.05	304.6	2852.0
Piles - min 1	8.85	23.82	2	54.05	304.6	1301.4

Two Way Shear Note

* Shear resistance is less than applied punching force.
TWO WAY SHEAR IN FOOTING IS NOT DESIGNED AND STIRRUPS ARE NOT CONSIDERED.

PIER 29 TO 35

PROJECT DATA

PROJECT DATA

Project:	ABC Generated Bridge
User Job No.:	
Designer:	LEAP Bridge Concrete
Date:	2/25/2021
Checker:	
Checked date:	Feb/25/2021
State:	
State Job No.:	
Structure type:	Pier.
Pier View:	Upstation.
State Specification:	None
Code:	AASHTO LRFD 8th Edition
Comments:	

PIER GEOMETRY

Pier Info:

Pier View:	Upstation.
Pier Type:	Hammer Head

Column Shape: Rectangular Non Tapered

Length(X) = 62.00 ft Height max(Y) = 12.50 ft Height min(Y) = 5.00 ft
Bottom length(X) = 16.00 ft Depth(Z) = 10.00 ft Skew angle = 0.00 Reduction of I = 1.000

SUPERSTRUCTURE INFO

Superstructure info:

Total number of spans:	3
Span number rear to current pier:	2
Number of traffic lanes:	7
Barrier height :	33.86 in
Depth of slab :	0.00 in
Curb to curb distance:	85.850 ft

Beam info:

Height in	Section area in^2	Inertia (Ixx) in^4	Inertia (Iyy) in^4	Beam CG in
108.00	24436.21	46904444.00	2040667008.00	47.68

Span #	Span length ft	Bridge Width ft
1	163.500	89.000
2	163.500	89.000
3	163.500	89.000
		89.000

BEARING POINTS

Number of bearing lines: 1

First bearing line **Eccentricity = -0.00 ft**

Point	Distance ft
1	0.62
2	18.38
3	43.62
4	61.38

MATERIAL PROPERTIES

MATERIAL PROPERTIES

	Cap	Column	Footing
Concrete Type	normal	normal	normal
Concrete Strength (psi)	4000.00	5000.00	4000.00
Concrete Density (lb/ft3)	150.00	150.00	150.00
Concrete Modulus Ec (ksi)	4266.22	4592.23	4266.22
Steel Strength Fy (ksi)	60.00	60.00	60.00

DESIGN PARAMETERS

Resistance factors for reinf. concrete

Flexure and tension	0.90
Shear and torsion (normal)	0.90
Shear and torsion (lightweight)	0.90
Axial compression (ties)	0.75
Axial compression (spiral)	0.75
Compression in STM	0.70

Multi presence factors for live load

1 Lane	1.20
2 Lanes	1.00
3 Lanes	0.85
4 Lanes	0.65
5 Lanes	0.65
6 Lanes	0.65

Dynamic load allowance IM

	Truck	Lane	Fatigue
Cap	0.33	0.00	0.15
Column	0.33	0.00	0.15
Footing	0.00	0.00	0.00

	Exposure factors	Clear cover in	Clear side cover in
Cap	1.00	2.00	2.00
Column	1.00	2.00	
Footing	1.00	3.00	3.00

Degree of fixity in foundations for Moment Magnify Method: Ga = 5.00

SEISMIC DESIGN PARAMETERS

Strength Reduction factors for reinf. Concrete Seismic Design

Tension controlled	0.90
Shear and torsion (normal)	0.90
Shear and torsion (lightweight)	0.70
Compression Controlled (ties)	0.75
Compression Controlled (spiral)	0.75

Seismic Overstrength

Flexure and tension	1.30
Axial compression (ties)	1.30
Axial compression (spiral)	1.30

Response Modification Factor	1.00

Use core area for plastic hinging calculations.

Design Factors

Cap Design Factor	1.20
Footing Design Factor	1.20

Plastic Hinge Moment

Use actual computed Plastic Hinging Moment for each column in all combinations.

LOADS

Pier Info:

Pier View:	Upstation.

Load Cases: 22

Longitudinal Reaction: Simple Span Distribution

Selected Vehicles:	Design Truck Design Truck + Lane Load Design Tandem + Lane Load Two Design Trucks + Lane Load Two Design Tandem + Lane Load

Tranverse Positioning

Number of loaded lanes	All combinations
Live Load Positions	Constant Spacing
Minimum Distance from Curb	2.000000
Center to Center Spacing	10.000000

Generate Braking/Longitudinal Force	Selected
Generate Centrifugal Force	Not Selected

Number of single regular truck positions	16
Number of all possible combinations of regular truck positions	2220

Loadcase ID: DC1 Name:

Multiplier = 1.000

Bearing loads

Line #	Bearing #	Dir	Load kips
1	1	Y	-1175.96
1	2	Y	-1175.96
1	3	Y	-1175.96
1	4	Y	-1175.96

Auto generation details:

Generated Dead Load

Imported vertical load from CIP RC/PT Girder module: 4703.83 kips
Imported moment from CIP RC/PT Girder module: 19715.20 k-ft

Loadcase ID: DW1 Name:

Multiplier = 1.000

Bearing loads

Line #	Bearing #	Dir	Load kips
1	1	Y	-17.66
1	2	Y	-16.51
1	3	Y	-16.51
1	4	Y	-17.66

Auto generation details:

Generated Dead Load

Slab weight = Not included
Girder weight = Not included
Wearing weight = 418.00 plf
Barrier load = Not included

Loadcase ID: LL1 Name:

Multiplier = 1.000

Bearing loads

Line #	Bearing #	Dir	Load kips	Lane Load
1	1	Y	-4.07	
1	2	Y	-96.17	
1	3	Y	-101.31	
1	4	Y	-152.67	
1	1	Y	-3.79	L
1	2	Y	-112.34	L
1	3	Y	-116.06	L
1	4	Y	-175.90	L

Auto generation details:

Generated Live Load

TRUCK IDENTIFICATION : Two Design Tandem + Lane Load
Positions of the center of each load measured from the left of the bridge :

TRUCK TYPE : Regular
Truck No. 1 - center line at: 82.43 - 2 axle on bearing line No. 1
Truck No. 2 - center line at: 72.43 - 2 axle on bearing line No. 1
Truck No. 3 - center line at: 62.43 - 2 axle on bearing line No. 1
Truck No. 4 - center line at: 52.43 - 2 axle on bearing line No. 1
Truck No. 5 - center line at: 42.43 - 2 axle on bearing line No. 1
Truck No. 6 - center line at: 32.43 - 2 axle on bearing line No. 1
Multi lane reduction factor used : 0.6500

Maximum effects in members :

Member 1	node 1	Fx = 879.2089
Member 1	node 2	Fx = -879.2089
Member 7	node 8	Fy = -629.7479
Member 7	node 7	Fy = 629.7479
Member 6	node 7	Fy = -629.7479
Member 6	node 2	Fy = 629.7479

Loadcase ID: LL2 Name:

Multiplier = 1.000

Bearing loads

Line #	Bearing #	Dir	Load kips	Lane Load
1	1	Y	-199.64	
1	2	Y	-31.97	
1	3	Y	0.00	
1	4	Y	0.00	
1	1	Y	-230.00	L
1	2	Y	-36.83	L
1	3	Y	0.00	L
1	4	Y	0.00	L

Auto generation details:

Generated Live Load

TRUCK IDENTIFICATION : Two Design Tandem + Lane Load
Positions of the center of each load measured from the left of the bridge :

TRUCK TYPE : Regular
Truck No. 1 - center line at: 26.57 - 2 axle on bearing line No. 1
Truck No. 2 - center line at: 16.57 - 2 axle on bearing line No. 1
Truck No. 3 - center line at: 6.57 - 2 axle on bearing line No. 1
Multi lane reduction factor used : 0.8500

Maximum effects in members :

Member 1	node 1	Mz = -16053.2871
Member 1	node 2	Mz = 16053.2871
Member 5	node 2	Mz = -16053.2871
Member 5	node 6	Mz = 11454.3477
Member 4	node 6	Mz = -11454.3477

Loadcase ID: LL3 Name:

Multiplier = 1.000

Bearing loads

Line #	Bearing #	Dir	Load kips	Lane Load
1	1	Y	0.00	
1	2	Y	0.00	
1	3	Y	-31.97	
1	4	Y	-199.64	
1	1	Y	0.00	L
1	2	Y	0.00	L
1	3	Y	-36.83	L
1	4	Y	-230.00	L

Auto generation details:

Generated Live Load

TRUCK IDENTIFICATION : Two Design Tandem + Lane Load
Positions of the center of each load measured from the left of the bridge :

TRUCK TYPE : Regular
Truck No. 1 - center line at: 82.43 - 2 axle on bearing line No. 1
Truck No. 2 - center line at: 72.43 - 2 axle on bearing line No. 1
Truck No. 3 - center line at: 62.43 - 2 axle on bearing line No. 1
Multi lane reduction factor used : 0.8500

Maximum effects in members :

Member 1	node 1	Mz = 16053.2861
Member 1	node 2	Mz = -16053.2861
Member 7	node 7	Mz = 11454.3467
Member 6	node 7	Mz = -11454.3467
Member 6	node 2	Mz = 16053.2861

Loadcase ID: LL4 Name:

Multiplier = 1.000

Bearing loads

Line #	Bearing #	Dir	Load kips	Lane Load
1	1	Y	-155.35	
1	2	Y	46.36	
1	3	Y	0.00	
1	4	Y	0.00	
1	1	Y	-178.98	L
1	2	Y	53.41	L
1	3	Y	0.00	L
1	4	Y	0.00	L

Auto generation details:

Generated Live Load

TRUCK IDENTIFICATION : Two Design Tandem + Lane Load
Positions of the center of each load measured from the left of the bridge :

TRUCK TYPE : Regular
Truck No. 1 - center line at: 6.57 - 2 axle on bearing line No. 1
Multi lane reduction factor used : 1.2000

Maximum effects in members :

Loadcase ID: LL5 Name:

Multiplier = 1.000

Bearing loads

Line #	Bearing #	Dir	Load kips	Lane Load
1	1	Y	0.00	
1	2	Y	0.00	
1	3	Y	26.10	
1	4	Y	-207.75	
1	1	Y	0.00	L
1	2	Y	0.00	L
1	3	Y	30.07	L
1	4	Y	-239.35	L

Auto generation details:

Generated Live Load

TRUCK IDENTIFICATION : Two Design Tandem + Lane Load
Positions of the center of each load measured from the left of the bridge :

TRUCK TYPE : Regular
Truck No. 1 - center line at: 82.43 - 2 axle on bearing line No. 1
Truck No. 2 - center line at: 72.43 - 2 axle on bearing line No. 1
Multi lane reduction factor used : 1.0000

Maximum effects in members :

Member 8	node 9	Fy = -515.6552
Member 8	node 8	Fy = 515.6552
Member 8	node 8	Mz = 9152.8789
Member 7	node 8	Mz = -9152.8789

Loadcase ID: LL6 Name:

Multiplier = 1.000

Bearing loads

Line #	Bearing #	Dir	Load kips	Lane Load
1	1	Y	-152.67	
1	2	Y	-101.31	
1	3	Y	-96.17	
1	4	Y	-4.07	
1	1	Y	-175.90	L
1	2	Y	-116.06	L
1	3	Y	-112.34	L
1	4	Y	-3.79	L

Auto generation details:

Generated Live Load

TRUCK IDENTIFICATION : Two Design Tandem + Lane Load
Positions of the center of each load measured from the left of the bridge :

TRUCK TYPE : Regular
Truck No. 1 - center line at: 56.57 - 2 axle on bearing line No. 1
Truck No. 2 - center line at: 46.57 - 2 axle on bearing line No. 1
Truck No. 3 - center line at: 36.57 - 2 axle on bearing line No. 1
Truck No. 4 - center line at: 26.57 - 2 axle on bearing line No. 1
Truck No. 5 - center line at: 16.57 - 2 axle on bearing line No. 1
Truck No. 6 - center line at: 6.57 - 2 axle on bearing line No. 1
Multi lane reduction factor used : 0.6500

Maximum effects in members :

Member 5	node 2	Fy = 629.7479
Member 5	node 6	Fy = -629.7479
Member 4	node 6	Fy = 629.7479
Member 4	node 5	Fy = -629.7479

Loadcase ID: LL7 Name:

Multiplier = 1.000

Bearing loads

Line #	Bearing #	Dir	Load kips	Lane Load
1	1	Y	0.00	
1	2	Y	0.00	
1	3	Y	46.36	
1	4	Y	-155.35	
1	1	Y	0.00	L
1	2	Y	0.00	L
1	3	Y	53.41	L
1	4	Y	-178.98	L

Auto generation details:

Generated Live Load

TRUCK IDENTIFICATION : Two Design Tandem + Lane Load
Positions of the center of each load measured from the left of the bridge :

TRUCK TYPE : Regular
Truck No. 1 - center line at: 82.43 - 2 axle on bearing line No. 1
Multi lane reduction factor used : 1.2000

Maximum effects in members :

Loadcase ID: LL8 Name:

Multiplier = 1.000

Bearing loads

Line #	Bearing #	Dir	Load kips	Lane Load
1	1	Y	-207.75	
1	2	Y	26.10	
1	3	Y	0.00	
1	4	Y	0.00	
1	1	Y	-239.35	L
1	2	Y	30.07	L
1	3	Y	0.00	L
1	4	Y	0.00	L

Auto generation details:

Generated Live Load

TRUCK IDENTIFICATION : Two Design Tandem + Lane Load
Positions of the center of each load measured from the left of the bridge :

TRUCK TYPE : Regular
Truck No. 1 - center line at: 16.57 - 2 axle on bearing line No. 1
Truck No. 2 - center line at: 6.57 - 2 axle on bearing line No. 1
Multi lane reduction factor used : 1.0000

Maximum effects in members :

Member 4	node 5	Mz = 9152.8809
Member 3	node 5	Fy = 515.6552
Member 3	node 5	Mz = -9152.8809
Member 3	node 4	Fy = -515.6552

Loadcase ID: BR1 Name:

Multiplier = 1.000

Cap loads

Type	Dir	Arm ft	Mag1	x1/L	Mag2	x2/L
Moment	X		-536.25 k-ft	0.50		

Bearing loads

Line #	Bearing #	Dir	Load kips
1	1	Z	-12.19
1	2	Z	-12.19
1	3	Z	-12.19
1	4	Z	-12.19

Auto generation details:

Selected Live Load for BR generation

Load: Design Truck
Load: Design Truck + Lane Load
Load: Design Tandem + Lane Load
Load: Two Design Trucks + Lane Load
Load: Two Design Tandem + Lane Load
Number of loaded lanes = 6
Contributing longitudinal length = 163.50 ft

Loadcase ID: BR2 Name:

Multiplier = 1.000

Cap loads

Type	Dir	Arm ft	Mag1	x1/L	Mag2	x2/L
Moment	X		-350.62 k-ft	0.50		

Bearing loads

Line #	Bearing #	Dir	Load kips
1	1	Z	-7.97
1	2	Z	-7.97
1	3	Z	-7.97
1	4	Z	-7.97

Auto generation details:

Selected Live Load for BR generation

Load: Design Truck
Load: Design Truck + Lane Load
Load: Design Tandem + Lane Load
Load: Two Design Trucks + Lane Load
Load: Two Design Tandem + Lane Load
Number of loaded lanes = 3
Contributing longitudinal length = 163.50 ft

Loadcase ID: BR3 Name:

Multiplier = 1.000

Cap loads

Type	Dir	Arm ft	Mag1	x1/L	Mag2	x2/L
Moment	X		-350.62 k-ft	0.50		

Bearing loads

Line #	Bearing #	Dir	Load kips
1	1	Z	-7.97
1	2	Z	-7.97
1	3	Z	-7.97
1	4	Z	-7.97

Auto generation details:

Selected Live Load for BR generation

Load: Design Truck
Load: Design Truck + Lane Load
Load: Design Tandem + Lane Load
Load: Two Design Trucks + Lane Load
Load: Two Design Tandem + Lane Load
Number of loaded lanes = 3
Contributing longitudinal length = 163.50 ft

Loadcase ID: BR4 Name:

Multiplier = 1.000

Cap loads

Type	Dir	Arm ft	Mag1	x1/L	Mag2	x2/L
Moment	X		-165.00 k-ft	0.50		

Bearing loads

Line #	Bearing #	Dir	Load kips
1	1	Z	-3.75
1	2	Z	-3.75
1	3	Z	-3.75
1	4	Z	-3.75

Auto generation details:

Selected Live Load for BR generation

Load: Design Truck
Load: Design Truck + Lane Load
Load: Design Tandem + Lane Load
Load: Two Design Trucks + Lane Load
Load: Two Design Tandem + Lane Load
Number of loaded lanes = 1
Contributing longitudinal length = 163.50 ft

Loadcase ID: BR5 Name:

Multiplier = 1.000

Cap loads

Type	Dir	Arm ft	Mag1	x1/L	Mag2	x2/L
Moment	X		-275.00 k-ft	0.50		

Bearing loads

Line #	Bearing #	Dir	Load kips
1	1	Z	-6.25
1	2	Z	-6.25
1	3	Z	-6.25
1	4	Z	-6.25

Auto generation details:

Selected Live Load for BR generation

Load: Design Truck
Load: Design Truck + Lane Load
Load: Design Tandem + Lane Load
Load: Two Design Trucks + Lane Load
Load: Two Design Tandem + Lane Load
Number of loaded lanes = 2
Contributing longitudinal length = 163.50 ft

Loadcase ID: BR6 Name:

Multiplier = 1.000

Cap loads

Type	Dir	Arm ft	Mag1	x1/L	Mag2	x2/L
Moment	X		-536.25 k-ft	0.50		

Bearing loads

Line #	Bearing #	Dir	Load kips
1	1	Z	-12.19
1	2	Z	-12.19
1	3	Z	-12.19
1	4	Z	-12.19

Auto generation details:

Selected Live Load for BR generation

Load: Design Truck
Load: Design Truck + Lane Load
Load: Design Tandem + Lane Load
Load: Two Design Trucks + Lane Load
Load: Two Design Tandem + Lane Load
Number of loaded lanes = 6
Contributing longitudinal length = 163.50 ft

Loadcase ID: BR7 Name:

Multiplier = 1.000

Cap loads

Type	Dir	Arm ft	Mag1	x1/L	Mag2	x2/L
Moment	X		-165.00 k-ft	0.50		

Bearing loads

Line #	Bearing #	Dir	Load kips
1	1	Z	-3.75
1	2	Z	-3.75
1	3	Z	-3.75
1	4	Z	-3.75

Auto generation details:

Selected Live Load for BR generation

Load: Design Truck
Load: Design Truck + Lane Load
Load: Design Tandem + Lane Load
Load: Two Design Trucks + Lane Load
Load: Two Design Tandem + Lane Load
Number of loaded lanes = 1
Contributing longitudinal length = 163.50 ft

Loadcase ID: BR8 Name:

Multiplier = 1.000

Cap loads

Type	Dir	Arm ft	Mag1	x1/L	Mag2	x2/L
Moment	X		-275.00 k-ft	0.50		

Bearing loads

Line #	Bearing #	Dir	Load kips
1	1	Z	-6.25
1	2	Z	-6.25
1	3	Z	-6.25
1	4	Z	-6.25

Auto generation details:

Selected Live Load for BR generation

Load: Design Truck
Load: Design Truck + Lane Load
Load: Design Tandem + Lane Load
Load: Two Design Trucks + Lane Load
Load: Two Design Tandem + Lane Load
Number of loaded lanes = 2
Contributing longitudinal length = 163.50 ft

Loadcase ID: WS1 Name: STR V & SER I-Angle: 0

Multiplier = 1.000

Cap loads

Type	Dir	Arm ft	Mag1	x1/L	Mag2	x2/L
Force	X	0.00	-1.98 kips	0.50		

Column loads

Col #	Type	Dir	Mag1	y1/L	Mag2	y2/L
1	UDL	X	-0.159 klf	0.00		0.78

Bearing loads

Line #	Bearing #	Dir	Load kips
1	1	X	-6.56
1	1	Y	-2.66
1	1	Z	-0.00
1	2	X	-6.56
1	2	Y	-0.00
1	2	Z	-0.00
1	3	X	-6.56
1	3	Y	-0.00
1	3	Z	-0.00
1	4	X	-6.56
1	4	Y	2.66
1	4	Z	-0.00

Auto generation details:

Generated Wind Load on Structure

Angle of wind = 0.00 deg Elevation above which wind load acts = 56.00 ft Modified design wind pressure, Pz: For STR V and SER I Pz,sup 13.020 psf Pz,sub 15.870 psf	For STR III and SER IV Pz,sup 59.780 psf Pz,sub 72.850 psf Overturning not considered

Loadcase ID: WS2 Name: STR III-Angle: 0

Multiplier = 1.000

Cap loads

Type	Dir	Arm ft	Mag1	x1/L	Mag2	x2/L
Force	X	0.00	-9.11 kips	0.50		

Column loads

Col #	Type	Dir	Mag1	y1/L	Mag2	y2/L
1	UDL	X	-0.729 klf	0.00		0.34

Bearing loads

Line #	Bearing #	Dir	Load kips
1	1	X	-30.11
1	1	Y	-12.21
1	1	Z	-0.00
1	2	X	-30.11
1	2	Y	-0.00
1	2	Z	-0.00
1	3	X	-30.11
1	3	Y	-0.00
1	3	Z	-0.00
1	4	X	-30.11
1	4	Y	12.21
1	4	Z	-0.00

Auto generation details:

Generated Wind Load on Structure

Angle of wind = 0.00 deg Elevation above which wind load acts = 56.00 ft	
Modified design wind pressure, Pz:	
For STR V and SER I	For STR III and SER IV
Pz,sup 13.020 psf	Pz,sup 59.780 psf
Pz,sub 15.870 psf	Pz,sub 72.850 psf
	Overturning not considered

Loadcase ID: WS3 Name: SER IV-Angle: 0

Multiplier = 1.000

Cap loads

Type	Dir	Arm ft	Mag1	x1/L	Mag2	x2/L
Force	X	0.00	-9.11 kips	0.50		

Column loads

Col #	Type	Dir	Mag1	y1/L	Mag2	y2/L
1	UDL	X	-0.159 klf	0.00		0.22

Bearing loads

Line #	Bearing #	Dir	Load kips
1	1	X	-30.11
1	1	Y	-12.21
1	1	Z	-0.00
1	2	X	-30.11
1	2	Y	-0.00
1	2	Z	-0.00
1	3	X	-30.11
1	3	Y	-0.00
1	3	Z	-0.00
1	4	X	-30.11
1	4	Y	12.21
1	4	Z	-0.00

Auto generation details:

Generated Wind Load on Structure

Angle of wind = 0.00 deg Elevation above which wind load acts = 56.00 ft Modified design wind pressure, Pz: For STR V and SER I Pz,sup 13.020 psf Pz,sub 15.870 psf	For STR III and SER IV Pz,sup 59.780 psf Pz,sub 72.850 psf Overturning not considered

Loadcase ID: WL1 Name: Angle: 0

Multiplier = 1.000

Bearing loads

Line #	Bearing #	Dir	Load kips
1	1	X	-4.09
1	1	Y	-4.04
1	1	Z	-0.00
1	2	X	-4.09
1	2	Y	-0.00
1	2	Z	-0.00
1	3	X	-4.09
1	3	Y	-0.00
1	3	Z	-0.00
1	4	X	-4.09
1	4	Y	4.04
1	4	Z	-0.00

Auto generation details:

Generated Wind Load on Live Load

Angle of wind = 0.00 deg Live load length = 163.50 ft

Selected load groups

STRENGTH GROUP I
STRENGTH GROUP II
FDOT STRENGTH GROUP III
FDOT STRENGTH GROUP V
FDOT SERVICE GROUP I
FDOT SERVICE GROUP IV
FATIGUE I

FOOTING DESIGN

ISOLATED FOOTING DESIGN

Code: AASHTO LRFD 8
Units: US
Pier View: Upstation.

GEOMETRY

Name : FTG02
Shape : Rectangular, Type : Pile/Shaft Cap
Bf(X) = 40.00 ft, Hf(Z) = 35.00 ft, Thickness(Y) = 72.00 in
Ag = 1400.00 ft^2, Ix = 3062.50 ft^2, Iz = 4200.00 ft^2
Footing eccentric: Start at X = -20.00 ft from centerline of column.
Footing eccentric: Start at Z = 17.50 ft from centerline of column.
Columns located on the footing:
Column No. 1 at x = 0.00 ft, Rectangular 192.00 in x 120.00 in
Piles: Round Size: W = 20.00 in
Service Capacity: 370.00 kips
Factored Capacity: 370.00 kips
Lateral Resistance: 0.00 kips
Piles Section Properties: Area = 2.18 ft^2 Ix = 7853.98 in^4 Iz = 7853.98 in^4

DESIGN PARAMETERS

f'c = 4000.00 psi	fy = 60000.00 psi
phi tens = 0.90	
phi comp = 0.75	phi shear = 0.90
Tens above = 0.005	Comp below = 0.002
Ec = 4266.2 ksi	Es = 29000.0 ksi
Crack check as per current LRFD	
Crack control Exposure = 1.00	
Concrete Type : Normal Weight.	

Reinforcement Schedule

Dir	Quantity	Size	Bar dist. in	As total in^2	Spacing in	Hook
X	90	US#8[M25]	15.50	71.10	4.64	None
X	27	US#8[M25]	68.50	21.33	15.88	None
Z	119	US#8[M25]	16.50	94.01	4.01	None
Z	31	US#8[M25]	67.50	24.49	15.77	None

Pile Reactions, Service Load Effect @ Footing Bot.

Pile	X in	Z in	Batter X degree	Batter Z degree	comb	Ovs	P kips	Mxx kft	Mzz kft	Pile Reac. kips
1	60.00	-150.0	-0	-0	334	1.000	-8502.36	-2040.00	16810.01	270.80
					391	1.000	-8502.36	2040.00	-16810.01	134.07
2	120.00	-150.0	-0	-0	338	1.000	-8766.24	-3120.00	12744.14	251.80
					391	1.000	-8502.36	2040.00	-16810.01	154.09
3	180.00	-150.0	-0	-0	338	1.000	-8766.24	-3120.00	12744.14	236.63
					391	1.000	-8502.36	2040.00	-16810.01	174.10
4	240.00	-150.0	-0	-0	333	1.000	-8766.24	-3120.00	-6962.04	221.45
					397	1.000	-8003.92	0.00	4560.98	190.57
5	300.00	-150.0	-0	-0	381	1.000	-8766.24	-3120.00	-12744.13	236.63
					342	1.000	-8502.36	2040.00	16810.01	174.10
6	360.00	-150.0	-0	-0	381	1.000	-8766.24	-3120.00	-12744.13	251.80
					342	1.000	-8502.36	2040.00	16810.01	154.09
7	420.00	-150.0	-0	-0	383	1.000	-8502.36	-2040.00	-16810.01	270.80
					342	1.000	-8502.36	2040.00	16810.01	134.07
8	60.00	-90.0	-0	-0	334	1.000	-8502.36	-2040.00	16810.01	267.47
					391	1.000	-8502.36	2040.00	-16810.01	137.41
9	120.00	-90.0	-0	-0	334	1.000	-8502.36	-2040.00	16810.01	247.46
					391	1.000	-8502.36	2040.00	-16810.01	157.42
10	180.00	-90.0	-0	-0	338	1.000	-8766.24	-3120.00	12744.14	231.53
					393	1.000	-8394.86	1600.00	-15762.54	177.19
11	240.00	-90.0	-0	-0	333	1.000	-8766.24	-3120.00	-6962.04	216.36
					397	1.000	-8003.92	0.00	4560.98	190.57
12	300.00	-90.0	-0	-0	381	1.000	-8766.24	-3120.00	-12744.13	231.53
					348	1.000	-8394.86	1600.00	15762.54	177.19
13	360.00	-90.0	-0	-0	383	1.000	-8502.36	-2040.00	-16810.01	247.46
					342	1.000	-8502.36	2040.00	16810.01	157.42
14	420.00	-90.0	-0	-0	383	1.000	-8502.36	-2040.00	-16810.01	267.47
					342	1.000	-8502.36	2040.00	16810.01	137.41
15	60.00	-30.0	-0	-0	334	1.000	-8502.36	-2040.00	16810.01	264.14
					391	1.000	-8502.36	2040.00	-16810.01	140.74
16	120.00	-30.0	-0	-0	334	1.000	-8502.36	-2040.00	16810.01	244.13
					391	1.000	-8502.36	2040.00	-16810.01	160.75
17	180.00	-30.0	-0	-0	338	1.000	-8766.24	-3120.00	12744.14	226.44
					393	1.000	-8394.86	1600.00	-15762.54	179.81
18	240.00	-30.0	-0	-0	333	1.000	-8766.24	-3120.00	-6962.04	211.27
					397	1.000	-8003.92	0.00	4560.98	190.57
19	300.00	-30.0	-0	-0	381	1.000	-8766.24	-3120.00	-12744.13	226.44
					348	1.000	-8394.86	1600.00	15762.54	179.81
20	360.00	-30.0	-0	-0	383	1.000	-8502.36	-2040.00	-16810.01	244.13
					342	1.000	-8502.36	2040.00	16810.01	160.75
21	420.00	-30.0	-0	-0	383	1.000	-8502.36	-2040.00	-16810.01	264.14
					342	1.000	-8502.36	2040.00	16810.01	140.74
22	60.00	30.0	-0	-0	342	1.000	-8502.36	2040.00	16810.01	264.14
					383	1.000	-8502.36	-2040.00	-16810.01	140.74

Pile	X in	Z in	Batter X degree	Batter Z degree	comb	Ovs	P kips	Mxx kft	Mzz kft	Pile Reac. kips
	120.00	30.0	-0	-0	342	1.000	-8502.36	2040.00	16810.01	244.13
					383	1.000	-8502.36	-2040.00	-16810.01	160.75
24	180.00	30.0	-0	-0	346	1.000	-8766.24	3120.00	12744.14	226.44
					385	1.000	-8394.86	-1600.00	-15762.54	179.81
25	240.00	30.0	-0	-0	341	1.000	-8766.24	3120.00	-6962.04	211.27
					397	1.000	-8003.92	0.00	4560.98	190.57
26	300.00	30.0	-0	-0	389	1.000	-8766.24	3120.00	-12744.13	226.44
					340	1.000	-8394.86	-1600.00	15762.54	179.81
27	360.00	30.0	-0	-0	391	1.000	-8502.36	2040.00	-16810.01	244.13
					334	1.000	-8502.36	-2040.00	16810.01	160.75
28	420.00	30.0	-0	-0	391	1.000	-8502.36	2040.00	-16810.01	264.14
					334	1.000	-8502.36	-2040.00	16810.01	140.74
29	60.00	90.0	-0	-0	342	1.000	-8502.36	2040.00	16810.01	267.47
					383	1.000	-8502.36	-2040.00	-16810.01	137.41
30	120.00	90.0	-0	-0	342	1.000	-8502.36	2040.00	16810.01	247.46
					383	1.000	-8502.36	-2040.00	-16810.01	157.42
31	180.00	90.0	-0	-0	346	1.000	-8766.24	3120.00	12744.14	231.53
					385	1.000	-8394.86	-1600.00	-15762.54	177.19
32	240.00	90.0	-0	-0	341	1.000	-8766.24	3120.00	-6962.04	216.36
					397	1.000	-8003.92	0.00	4560.98	190.57
33	300.00	90.0	-0	-0	389	1.000	-8766.24	3120.00	-12744.13	231.53
					340	1.000	-8394.86	-1600.00	15762.54	177.19
34	360.00	90.0	-0	-0	391	1.000	-8502.36	2040.00	-16810.01	247.46
					334	1.000	-8502.36	-2040.00	16810.01	157.42
35	420.00	90.0	-0	-0	391	1.000	-8502.36	2040.00	-16810.01	267.47
					334	1.000	-8502.36	-2040.00	16810.01	137.41
36	60.00	150.0	-0	-0	342	1.000	-8502.36	2040.00	16810.01	270.80
					383	1.000	-8502.36	-2040.00	-16810.01	134.07
37	120.00	150.0	-0	-0	346	1.000	-8766.24	3120.00	12744.14	251.80
					383	1.000	-8502.36	-2040.00	-16810.01	154.09
38	180.00	150.0	-0	-0	346	1.000	-8766.24	3120.00	12744.14	236.63
					383	1.000	-8502.36	-2040.00	-16810.01	174.10
39	240.00	150.0	-0	-0	341	1.000	-8766.24	3120.00	-6962.04	221.45
					397	1.000	-8003.92	0.00	4560.98	190.57
40	300.00	150.0	-0	-0	389	1.000	-8766.24	3120.00	-12744.13	236.63
					334	1.000	-8502.36	-2040.00	16810.01	174.10
41	360.00	150.0	-0	-0	389	1.000	-8766.24	3120.00	-12744.13	251.80
					334	1.000	-8502.36	-2040.00	16810.01	154.09
42	420.00	150.0	-0	-0	391	1.000	-8502.36	2040.00	-16810.01	270.80
					334	1.000	-8502.36	-2040.00	16810.01	134.07

Pile Reactions, Factored **Load Effect @ Footing Bot.**

Pile	X in	Z in	Batter X degree	Batter Z degree	comb	Ovs	P kips	Mxx kft	Mzz kft	Pile Reac. kips
1	60.0	-150.0	-0	-0	2	---	-10894.26	-3570.00	24358.19	360.95
					59	---	-8058.71	3570.00	-24358.19	90.31
2	120.0	-150.0	-0	-0	6	---	-11356.04	-5460.00	17242.91	333.72
					59	---	-8058.71	3570.00	-24358.19	119.31
3	180.0	-150.0	-0	-0	6	---	-11356.04	-5460.00	17242.91	313.19
					59	---	-8058.71	3570.00	-24358.19	148.30
4	240.0	-150.0	-0	-0	1	---	-11356.04	-5460.00	-17242.90	292.67
					68	---	-7186.45	0.00	-0.00	171.11
5	300.0	-150.0	-0	-0	1	---	-11356.04	-5460.00	-17242.90	313.19
					58	---	-8058.71	3570.00	24358.19	148.30
6	360.0	-150.0	-0	-0	1	---	-11356.04	-5460.00	-17242.90	333.72
					58	---	-8058.71	3570.00	24358.19	119.31
7	420.0	-150.0	-0	-0	3	---	-10894.26	-3570.00	-24358.19	360.95
					58	---	-8058.71	3570.00	24358.19	90.31
8	60.0	-90.0	-0	-0	2	---	-10894.26	-3570.00	24358.19	355.12
					59	---	-8058.71	3570.00	-24358.19	96.14
9	120.0	-90.0	-0	-0	2	---	-10894.26	-3570.00	24358.19	326.13
					59	---	-8058.71	3570.00	-24358.19	125.14
10	180.0	-90.0	-0	-0	6	---	-11356.04	-5460.00	17242.91	304.28
					329	---	-7714.20	2160.00	-20801.34	153.62
11	240.0	-90.0	-0	-0	1	---	-11356.04	-5460.00	-17242.90	283.75
					68	---	-7186.45	0.00	-0.00	171.11
12	300.0	-90.0	-0	-0	1	---	-11356.04	-5460.00	-17242.90	304.28
					284	---	-7714.20	2160.00	20801.34	153.62
13	360.0	-90.0	-0	-0	3	---	-10894.26	-3570.00	-24358.19	326.13
					58	---	-8058.71	3570.00	24358.19	125.14
14	420.0	-90.0	-0	-0	3	---	-10894.26	-3570.00	-24358.19	355.12
					58	---	-8058.71	3570.00	24358.19	96.14
15	60.0	-30.0	-0	-0	2	---	-10894.26	-3570.00	24358.19	349.29
					59	---	-8058.71	3570.00	-24358.19	101.97
16	120.0	-30.0	-0	-0	2	---	-10894.26	-3570.00	24358.19	320.30
					59	---	-8058.71	3570.00	-24358.19	130.96
17	180.0	-30.0	-0	-0	6	---	-11356.04	-5460.00	17242.91	295.37
					329	---	-7714.20	2160.00	-20801.34	157.14
18	240.0	-30.0	-0	-0	1	---	-11356.04	-5460.00	-17242.90	274.84
					68	---	-7186.45	0.00	-0.00	171.11
19	300.0	-30.0	-0	-0	1	---	-11356.04	-5460.00	-17242.90	295.37
					284	---	-7714.20	2160.00	20801.34	157.14
20	360.0	-30.0	-0	-0	3	---	-10894.26	-3570.00	-24358.19	320.30
					58	---	-8058.71	3570.00	24358.19	130.96
21	420.0	-30.0	-0	-0	3	---	-10894.26	-3570.00	-24358.19	349.29
					58	---	-8058.71	3570.00	24358.19	101.97
22	60.0	30.0	-0	-0	10	---	-10894.26	3570.00	24358.19	349.29
					51	---	-8058.71	-3570.00	-24358.19	101.97

Pile	X in	Z in	Batter X degree	Batter Z degree	comb	Ovs	P kips	Mxx kft	Mzz kft	Pile Reac. kips
	120.0	30.0	-0	-0	10	---	-10894.26	3570.00	24358.19	320.30
					51	---	-8058.71	-3570.00	-24358.19	130.96
24	180.0	30.0	-0	-0	14	---	-11356.04	5460.00	17242.91	295.37
					321	---	-7714.20	-2160.00	-20801.34	157.14
25	240.0	30.0	-0	-0	9	---	-11356.04	5460.00	-17242.90	274.84
					68	---	-7186.45	0.00	-0.00	171.11
26	300.0	30.0	-0	-0	9	---	-11356.04	5460.00	-17242.90	295.37
					276	---	-7714.20	-2160.00	20801.34	157.14
27	360.0	30.0	-0	-0	11	---	-10894.26	3570.00	-24358.19	320.30
					50	---	-8058.71	-3570.00	24358.19	130.96
28	420.0	30.0	-0	-0	11	---	-10894.26	3570.00	-24358.19	349.29
					50	---	-8058.71	-3570.00	24358.19	101.97
29	60.0	90.0	-0	-0	10	---	-10894.26	3570.00	24358.19	355.12
					51	---	-8058.71	-3570.00	-24358.19	96.14
30	120.0	90.0	-0	-0	10	---	-10894.26	3570.00	24358.19	326.13
					51	---	-8058.71	-3570.00	-24358.19	125.14
31	180.0	90.0	-0	-0	14	---	-11356.04	5460.00	17242.91	304.28
					321	---	-7714.20	-2160.00	-20801.34	153.62
32	240.0	90.0	-0	-0	9	---	-11356.04	5460.00	-17242.90	283.75
					68	---	-7186.45	0.00	-0.00	171.11
33	300.0	90.0	-0	-0	9	---	-11356.04	5460.00	-17242.90	304.28
					276	---	-7714.20	-2160.00	20801.34	153.62
34	360.0	90.0	-0	-0	11	---	-10894.26	3570.00	-24358.19	326.13
					50	---	-8058.71	-3570.00	24358.19	125.14
35	420.0	90.0	-0	-0	11	---	-10894.26	3570.00	-24358.19	355.12
					50	---	-8058.71	-3570.00	24358.19	96.14
36	60.0	150.0	-0	-0	10	---	-10894.26	3570.00	24358.19	360.95
					51	---	-8058.71	-3570.00	-24358.19	90.31
37	120.0	150.0	-0	-0	14	---	-11356.04	5460.00	17242.91	333.72
					51	---	-8058.71	-3570.00	-24358.19	119.31
38	180.0	150.0	-0	-0	14	---	-11356.04	5460.00	17242.91	313.19
					51	---	-8058.71	-3570.00	-24358.19	148.30
39	240.0	150.0	-0	-0	9	---	-11356.04	5460.00	-17242.90	292.67
					68	---	-7186.45	0.00	-0.00	171.11
40	300.0	150.0	-0	-0	9	---	-11356.04	5460.00	-17242.90	313.19
					50	---	-8058.71	-3570.00	24358.19	148.30
41	360.0	150.0	-0	-0	9	---	-11356.04	5460.00	-17242.90	333.72
					50	---	-8058.71	-3570.00	24358.19	119.31
42	420.0	150.0	-0	-0	11	---	-10894.26	3570.00	-24358.19	360.95
					50	---	-8058.71	-3570.00	24358.19	90.31

Pile Reactions: Notes

Load effects on pile are calculated at centroid of the bottom of the footing.
Both the max. and min. pile reaction are reported for each individual pile.
Positive pile reaction represents pile subject to compression load; negative pile reaction represents pile subject to uplift.
Coordinate system of pile layout see Geometry Tab>Footing Pile>Edit Pile.

Pile Lateral Resistance Check X

Controlling load combination number	75
Lateral loads on all piles(kips)	196.932
Batter angle(deg)	0.000
Available lateral resistance due to batter(kips)	0.000
Direct shear resistance of all piles(kips)	0.000
Total pile lateral resistance(kips)	0.000
Is the lateral resistance due to batter greater than lateral load on all piles?	NO
Is the total pile lateral resistance greater than the lateral load on all piles?	NO

Pile Lateral Resistance Check Z

Controlling load combination number	49
Lateral loads on all piles(kips)	85.313
Batter angle(deg)	0.000
Available lateral resistance due to batter(kips)	0.000
Direct shear resistance of all piles(kips)	0.000
Total pile lateral resistance(kips)	0.000
Is the lateral resistance due to batter greater than lateral load on all piles?	NO
Is the total pile lateral resistance greater than the lateral load on all piles?	NO

Max. Pile Reaction Used in Design:

Factored pile reaction	360.95 kips	Comb 2
Service pile reaction	270.80 kips	Comb 334

Flexure

Dir	Loc ft	d in	Mmax kft	Comb	CL	Asb_req in^2	Asb_prv in^2	Asb_eff in^2	Ast_req in^2	Ast_prv in^2	Ast_eff in^2
X	-8.00	56.50	17450.2	2	T	70.48	71.10	71.10	21.00	21.33	21.33
X	8.00	56.50	17450.2	2	T	70.48	71.10	71.10	21.00	21.33	21.33
Z	-5.00	55.50	22735.4	2	T	93.96	94.01	94.01	24.00	24.49	24.49
Z	5.00	55.50	22735.4	2	T	93.96	94.01	94.01	24.00	24.49	24.49

Flexure Note

CL: Section classification as per LRFD 2006 interims for provided reinforcement.
C = Compression controlled, I = In-Transition, T = Tension controlled.
Required reinforcement is based on phi for tension controlled sections..

Crack control and fatigue check

Cracking/Fatigue

Dir	Loc ft	d in	Service Mmax kft	Service Comb	Service fs ksi	Service Srq in	Service Spr in	Fatigue fs ksi	Fatigue FTH ksi
X	-8.00	56.50	12355.2	334	39.22**	13.5	4.6	0.00	0.00
X	8.00	56.50	12355.2	334	39.22**	13.5	4.6	0.00	0.00
Z	-5.00	55.50	16143.5	334	39.70**	13.5	4.0	0.00	0.00
Z	5.00	55.50	16143.5	334	39.70**	13.5	4.0	0.00	0.00

Cracking/Fatigue Note

** Stress (fs) is higher than steel yield strength (0.6*fy).

NOTE: PRELIMINARY CALCULATIONS ARE TO DETERMINE PILE LOADS. VALUES IN RED WILL BE ADDRESSED IN FINAL PIER DESIGN.

One Way Shear (Beta-Theta Method)

Col	Dir	Dist ft	Comb	dv in	Vu kips	Mu kft	theta deg	beta	phi*Vc kips
1	X	-12.58	2	55.01	1955.5	14380.4	37.64	1.68	2212.9
	X	12.58	2	55.0	1955.5	14380.4	37.64	1.68	2212.9
	Z	-9.48	2	53.77	2266.8	17908.2	37.04	1.76	2589.7
	Z	9.48	2	53.77	2266.8	17908.2	37.04	1.76	2589.7

Two Way Shear

#	Bo ft	Ao ft^2	Comb	Avg. dv in	Vu kips	phi*Vc kips
Columns 1	70.13	298.39	2	54.39	**11550.5***	10381.0
Piles - max 1	19.48	30.18	2	54.39	361.0	2882.8
Piles - min 1	19.48	30.18	2	54.39	361.0	2882.8

NOTE: PRELIMINARY CALCULATIONS ARE TO DETERMINE PILE LOADS. VALUES IN RED WILL BE ADDRESSED IN FINAL PIER DESIGN.

Two Way Shear Note

* Shear resistance is less than applied punching force.
TWO WAY SHEAR IN FOOTING IS NOT DESIGNED AND STIRRUPS ARE NOT CONSIDERED.

PIER 36-37

PROJECT DATA

PROJECT DATA

Project:	ABC Generated Bridge
User Job No.:	
Designer:	LEAP Bridge Concrete
Date:	1/26/2021
Checker:	
Checked date:	Jan/26/2021
State:	
State Job No.:	
Structure type:	Pier.
Pier View:	Upstation.
State Specification:	None
Code:	AASHTO LRFD 8th Edition
Comments:	

PIER GEOMETRY

Pier Info:

Pier View:	Upstation.
Pier Type:	Multi Column

Cap Shape

Cap Shape: Tapered
Top Elevations: start = 103.00 ft end = 103.00 ft
Depth(Z) = 120.00 in Skew angle = 0.00 Reduction of I = 1.000

Column Shape : Rectangular

Number of columns: 1

Column number 1

Location from the left edge of the cap(X): 31.00 ft
Elevations: bottom = 60.00 ft top = 99.25 ft Reduction of I = 1.000
Column Bottom is Fixed

Column Section Dimensions

Width(X) = 192.00 in Depth(Z) = 120.00 in

SUPERSTRUCTURE INFO

Superstructure info:

Total number of spans:	3
Span number rear to current pier:	1
Number of traffic lanes:	7
Barrier height :	36.00 in
Depth of slab :	0.00 in
Curb to curb distance:	85.850 ft

Beam info:

Height in	Section area in^2	Inertia (Ixx) in^4	Inertia (Iyy) in^4	Beam CG in
168.00	31134.46	146282896.00	2589653504.00	74.46

Span #	Span length ft	Bridge Width ft
1	163.500	89.000
2	300.000	89.000
3	163.500	89.000
		89.000

BEARING POINTS

Number of bearing lines: 1

First bearing line **Eccentricity = -0.00 ft**

Point	Distance ft
1	0.62
2	18.38
3	43.62
4	61.38

MATERIAL PROPERTIES

MATERIAL PROPERTIES

	Cap	Column	Footing
Concrete Type	normal	normal	normal
Concrete Strength (psi)	4000.00	5000.00	4000.00
Concrete Density (lb/ft3)	150.00	150.00	150.00
Concrete Modulus Ec (ksi)	4266.22	3000.00	4266.22
Steel Strength Fy (ksi)	60.00	60.00	60.00

DESIGN PARAMETERS

Resistance factors for reinf. concrete

Flexure and tension	0.90
Shear and torsion (normal)	0.90
Shear and torsion (lightweight)	0.90
Axial compression (ties)	0.75
Axial compression (spiral)	0.75
Compression in STM	0.70

Multi presence factors for live load

1 Lane	1.20
2 Lanes	1.00
3 Lanes	0.85
4 Lanes	0.65
5 Lanes	0.65
6 Lanes	0.65

Dynamic load allowance IM

	Truck	Lane	Fatigue
Cap	0.33	0.00	0.15
Column	0.33	0.00	0.15
Footing	0.00	0.00	0.00

	Exposure factors	Clear cover in	Clear side cover in
Cap	1.00	2.00	2.00
Column	1.00	2.00	
Footing	1.00	3.00	3.00

Degree of fixity in foundations for Moment Magnify Method: Ga = 5.00

SEISMIC DESIGN PARAMETERS

Strength Reduction factors for reinf. Concrete Seismic Design

Tension controlled	0.90
Shear and torsion (normal)	0.90
Shear and torsion (lightweight)	0.70
Compression Controlled (ties)	0.75
Compression Controlled (spiral)	0.75

Seismic Overstrength

Flexure and tension	1.30
Axial compression (ties)	1.30
Axial compression (spiral)	1.30

Response Modification Factor	1.00

Use core area for plastic hinging calculations.

Design Factors

Cap Design Factor	1.20
Footing Design Factor	1.20

Plastic Hinge Moment

Use actual computed Plastic Hinging Moment for each column in all combinations.

LOADS

Pier Info:

Pier View:	Upstation.

Load Cases: 20

Longitudinal Reaction: Simple Span Distribution

Selected Vehicles:	Design Truck Design Truck + Lane Load Design Tandem + Lane Load Two Design Trucks + Lane Load Two Design Tandem + Lane Load

Tranverse Positioning

Number of loaded lanes	All combinations
Live Load Positions	Constant Spacing
Minimum Distance from Curb	2.000000
Center to Center Spacing	10.000000

Generate Braking/Longitudinal Force	Selected
Generate Centrifugal Force	Not Selected

Total number of Considered Truck Positions	6
Total number of Possible Combination	16

Loadcase ID: DC1 Name:

Multiplier = 1.000

Bearing loads

Line #	Bearing #	Dir	Load kips
1	1	Y	-2061.31
1	2	Y	-2061.31
1	3	Y	-2061.31
1	4	Y	-2061.31

Auto generation details:

Generated Dead Load

Imported vertical load from CIP RC/PT Girder module: 8245.23 kips
Imported moment from CIP RC/PT Girder module: 97802.20 k-ft

Loadcase ID: DW1 Name:

Multiplier = 1.000

Bearing loads

Line #	Bearing #	Dir	Load kips
1	1	Y	-25.03
1	2	Y	-23.40
1	3	Y	-23.40
1	4	Y	-25.03

Auto generation details:

Generated Dead Load

Slab weight = Not included
Girder weight = Not included
Wearing weight = 418.00 plf
Barrier load = Not included

Loadcase ID: WS1 Name: STR V & SER I-Angle: 0

Multiplier = 1.000

Cap loads

Type	Dir	Arm ft	Mag1	x1/L	Mag2	x2/L
Force	X	0.00	-1.88 kips	0.50		

Column loads

Col #	Type	Dir	Mag1	y1/L	Mag2	y2/L
1	UDL	X	-0.157 klf	0.00		0.71

Bearing loads

Line #	Bearing #	Dir	Load kips
1	1	X	-12.95
1	1	Y	-7.38
1	1	Z	-0.00
1	2	X	-12.95
1	2	Y	-0.00
1	2	Z	-0.00
1	3	X	-12.95
1	3	Y	-0.00
1	3	Z	-0.00
1	4	X	-12.95
1	4	Y	7.38
1	4	Z	-0.00

Auto generation details:

Generated Wind Load on Structure

Angle of wind = 0.00 deg Elevation above which wind load acts = 42.50 ft	
Modified design wind pressure, Pz:	
For STR V and SER I	For STR III and SER IV
Pz,sup 12.900 psf	Pz,sup 59.240 psf
Pz,sub 15.700 psf	Pz,sub 72.070 psf
	Overturning not considered

Loadcase ID: WS2 Name: STR III-Angle: 0

Multiplier = 1.000

Cap loads

Type	Dir	Arm ft	Mag1	x1/L	Mag2	x2/L
Force	X	0.00	-8.65 kips	0.50		

Column loads

Col #	Type	Dir	Mag1	y1/L	Mag2	y2/L
1	UDL	X	-0.721 klf	0.00		0.71

Bearing loads

Line #	Bearing #	Dir	Load kips
1	1	X	-59.45
1	1	Y	-33.90
1	1	Z	-0.00
1	2	X	-59.45
1	2	Y	-0.00
1	2	Z	-0.00
1	3	X	-59.45
1	3	Y	-0.00
1	3	Z	-0.00
1	4	X	-59.45
1	4	Y	33.90
1	4	Z	-0.00

Auto generation details:

Generated Wind Load on Structure

Angle of wind = 0.00 deg Elevation above which wind load acts = 42.50 ft Modified design wind pressure, Pz: For STR V and SER I Pz,sup 12.900 psf Pz,sub 15.700 psf	For STR III and SER IV Pz,sup 59.240 psf Pz,sub 72.070 psf Overturning not considered

Loadcase ID: WS3 Name: SER IV-Angle: 0

Multiplier = 1.000

Cap loads

Type	Dir	Arm ft	Mag1	x1/L	Mag2	x2/L
Force	X	0.00	-8.65 kips	0.50		

Column loads

Col #	Type	Dir	Mag1	y1/L	Mag2	y2/L
1	UDL	X	-0.157 klf	0.00		0.71

Bearing loads

Line #	Bearing #	Dir	Load kips
1	1	X	-59.45
1	1	Y	-33.90
1	1	Z	-0.00
1	2	X	-59.45
1	2	Y	-0.00
1	2	Z	-0.00
1	3	X	-59.45
1	3	Y	-0.00
1	3	Z	-0.00
1	4	X	-59.45
1	4	Y	33.90
1	4	Z	-0.00

Auto generation details:

Generated Wind Load on Structure

Angle of wind = 0.00 deg Elevation above which wind load acts = 42.50 ft Modified design wind pressure, Pz: For STR V and SER I Pz,sup 12.900 psf Pz,sub 15.700 psf	For STR III and SER IV Pz,sup 59.240 psf Pz,sub 72.070 psf Overturning not considered

Loadcase ID: WL1 Name: Angle: 0

Multiplier = 1.000

Bearing loads

Line #	Bearing #	Dir	Load kips
1	1	X	-5.79
1	1	Y	-7.63
1	1	Z	-0.00
1	2	X	-5.79
1	2	Y	-0.00
1	2	Z	-0.00
1	3	X	-5.79
1	3	Y	-0.00
1	3	Z	-0.00
1	4	X	-5.79
1	4	Y	7.63
1	4	Z	-0.00

Auto generation details:

Generated Wind Load on Live Load

Angle of wind = 0.00 deg Live load length = 231.75 ft

Loadcase ID: LL1 Name:

Multiplier = 1.000

Bearing loads

Line #	Bearing #	Dir	Load kips	Lane Load
1	1	Y	-4.98	
1	2	Y	-117.60	
1	3	Y	-123.89	
1	4	Y	-186.69	
1	1	Y	-4.84	L
1	2	Y	-143.31	L
1	3	Y	-148.05	L
1	4	Y	-224.40	L

Auto generation details:

Generated Live Load

TRUCK IDENTIFICATION : Two Design Trucks + Lane Load
Positions of the center of each load measured from the left of the bridge :

TRUCK TYPE : Regular
Truck No. 1 - center line at: 82.43 - 3 axle on bearing line No. 1
Truck No. 2 - center line at: 72.43 - 3 axle on bearing line No. 1
Truck No. 3 - center line at: 62.43 - 3 axle on bearing line No. 1
Truck No. 4 - center line at: 52.43 - 3 axle on bearing line No. 1
Truck No. 5 - center line at: 42.43 - 3 axle on bearing line No. 1
Truck No. 6 - center line at: 32.43 - 3 axle on bearing line No. 1
Multi lane reduction factor used : 0.6500

Maximum effects in members :

Member 1	node 1	Fx = 1096.7177
Member 1	node 2	Fx = -1096.7177
Member 7	node 8	Fy = -785.5240
Member 7	node 7	Fy = 785.5240
Member 6	node 7	Fy = -785.5240
Member 6	node 2	Fy = 785.5240

Loadcase ID: LL2 Name:

Multiplier = 1.000

Bearing loads

Line #	Bearing #	Dir	Load kips	Lane Load
1	1	Y	-244.14	
1	2	Y	-39.09	
1	3	Y	0.00	
1	4	Y	0.00	
1	1	Y	-293.41	L
1	2	Y	-46.98	L
1	3	Y	0.00	L
1	4	Y	0.00	L

Auto generation details:

Generated Live Load

TRUCK IDENTIFICATION : Two Design Trucks + Lane Load
Positions of the center of each load measured from the left of the bridge :

TRUCK TYPE : Regular
Truck No. 1 - center line at: 26.57 - 3 axle on bearing line No. 1
Truck No. 2 - center line at: 16.57 - 3 axle on bearing line No. 1
Truck No. 3 - center line at: 6.57 - 3 axle on bearing line No. 1
Multi lane reduction factor used : 0.8500

Maximum effects in members :

Member 1	node 1	Mz = -20024.7344
Member 1	node 2	Mz = 20024.7344
Member 5	node 2	Mz = -20024.7344
Member 5	node 6	Mz = 14288.0566
Member 4	node 6	Mz = -14288.0566

Loadcase ID: LL3 Name:

Multiplier = 1.000

Bearing loads

Line #	Bearing #	Dir	Load kips	Lane Load
1	1	Y	0.00	
1	2	Y	0.00	
1	3	Y	-39.09	
1	4	Y	-244.14	
1	1	Y	0.00	L
1	2	Y	0.00	L
1	3	Y	-46.98	L
1	4	Y	-293.41	L

Auto generation details:

Generated Live Load

TRUCK IDENTIFICATION : Two Design Trucks + Lane Load
Positions of the center of each load measured from the left of the bridge :

TRUCK TYPE : Regular
Truck No. 1 - center line at: 82.43 - 3 axle on bearing line No. 1
Truck No. 2 - center line at: 72.43 - 3 axle on bearing line No. 1
Truck No. 3 - center line at: 62.43 - 3 axle on bearing line No. 1
Multi lane reduction factor used : 0.8500

Maximum effects in members :

Member 1	node 1	Mz = 20024.7324
Member 1	node 2	Mz = -20024.7324
Member 7	node 7	Mz = 14288.0547
Member 6	node 7	Mz = -14288.0547
Member 6	node 2	Mz = 20024.7324

Loadcase ID: LL4 Name:

Multiplier = 1.000

Bearing loads

Line #	Bearing #	Dir	Load kips	Lane Load
1	1	Y	0.00	
1	2	Y	0.00	
1	3	Y	31.92	
1	4	Y	-254.05	
1	1	Y	0.00	L
1	2	Y	0.00	L
1	3	Y	38.36	L
1	4	Y	-305.33	L

Auto generation details:

Generated Live Load

TRUCK IDENTIFICATION : Two Design Trucks + Lane Load
Positions of the center of each load measured from the left of the bridge :

TRUCK TYPE : Regular
Truck No. 1 - center line at: 82.43 - 3 axle on bearing line No. 1
Truck No. 2 - center line at: 72.43 - 3 axle on bearing line No. 1
Multi lane reduction factor used : 1.0000

Maximum effects in members :

Member 8	node 9	Fy = -643.2239
Member 8	node 8	Fy = 643.2239
Member 8	node 8	Mz = 11417.2246
Member 7	node 8	Mz = -11417.2246

Loadcase ID: LL5 Name:

Multiplier = 1.000

Bearing loads

Line #	Bearing #	Dir	Load kips	Lane Load
1	1	Y	-189.98	
1	2	Y	56.69	
1	3	Y	0.00	
1	4	Y	0.00	
1	1	Y	-228.32	L
1	2	Y	68.14	L
1	3	Y	0.00	L
1	4	Y	0.00	L

Auto generation details:

Generated Live Load

TRUCK IDENTIFICATION : Two Design Trucks + Lane Load
Positions of the center of each load measured from the left of the bridge :

TRUCK TYPE : Regular
Truck No. 1 - center line at: 6.57 - 3 axle on bearing line No. 1
Multi lane reduction factor used : 1.2000

Maximum effects in members :

Loadcase ID: LL6 Name:

Multiplier = 1.000

Bearing loads

Line #	Bearing #	Dir	Load kips	Lane Load
1	1	Y	-186.69	
1	2	Y	-123.89	
1	3	Y	-117.60	
1	4	Y	-4.98	
1	1	Y	-224.40	L
1	2	Y	-148.05	L
1	3	Y	-143.31	L
1	4	Y	-4.84	L

Auto generation details:

Generated Live Load

TRUCK IDENTIFICATION : Two Design Trucks + Lane Load
Positions of the center of each load measured from the left of the bridge :

TRUCK TYPE : Regular
Truck No. 1 - center line at: 56.57 - 3 axle on bearing line No. 1
Truck No. 2 - center line at: 46.57 - 3 axle on bearing line No. 1
Truck No. 3 - center line at: 36.57 - 3 axle on bearing line No. 1
Truck No. 4 - center line at: 26.57 - 3 axle on bearing line No. 1
Truck No. 5 - center line at: 16.57 - 3 axle on bearing line No. 1
Truck No. 6 - center line at: 6.57 - 3 axle on bearing line No. 1
Multi lane reduction factor used : 0.6500

Maximum effects in members :

Member 5	node 2	Fy = 785.5240
Member 5	node 6	Fy = -785.5240
Member 4	node 6	Fy = 785.5240
Member 4	node 5	Fy = -785.5240

Loadcase ID: LL7 Name:

Multiplier = 1.000

Bearing loads

Line #	Bearing #	Dir	Load kips	Lane Load
1	1	Y	-254.05	
1	2	Y	31.92	
1	3	Y	0.00	
1	4	Y	0.00	
1	1	Y	-305.33	L
1	2	Y	38.36	L
1	3	Y	0.00	L
1	4	Y	0.00	L

Auto generation details:

Generated Live Load

TRUCK IDENTIFICATION : Two Design Trucks + Lane Load
Positions of the center of each load measured from the left of the bridge :

TRUCK TYPE : Regular
Truck No. 1 - center line at: 16.57 - 3 axle on bearing line No. 1
Truck No. 2 - center line at: 6.57 - 3 axle on bearing line No. 1
Multi lane reduction factor used : 1.0000

Maximum effects in members :

Member 4	node 5	Mz = 11417.2256
Member 3	node 5	Fy = 643.2240
Member 3	node 5	Mz = -11417.2256
Member 3	node 4	Fy = -643.2240

Loadcase ID: BR1 Name:

Multiplier = 1.000

Cap loads

Type	Dir	Arm ft	Mag1	x1/L	Mag2	x2/L
Moment	X		-1404.00 k-ft	0.50		

Bearing loads

Line #	Bearing #	Dir	Load kips
1	1	Z	-17.55
1	2	Z	-17.55
1	3	Z	-17.55
1	4	Z	-17.55

Auto generation details:

Selected Live Load for BR generation

Load: Design Truck
Load: Design Truck + Lane Load
Load: Design Tandem + Lane Load
Load: Two Design Trucks + Lane Load
Load: Two Design Tandem + Lane Load
Number of loaded lanes = 6
Contributing longitudinal length = 231.75 ft

Loadcase ID: BR2 Name:

Multiplier = 1.000

Cap loads

Type	Dir	Arm ft	Mag1	x1/L	Mag2	x2/L
Moment	X		-918.00 k-ft	0.50		

Bearing loads

Line #	Bearing #	Dir	Load kips
1	1	Z	-11.48
1	2	Z	-11.48
1	3	Z	-11.48
1	4	Z	-11.48

Auto generation details:

Selected Live Load for BR generation

Load: Design Truck
Load: Design Truck + Lane Load
Load: Design Tandem + Lane Load
Load: Two Design Trucks + Lane Load
Load: Two Design Tandem + Lane Load
Number of loaded lanes = 3
Contributing longitudinal length = 231.75 ft

Loadcase ID: BR3 Name:

Multiplier = 1.000

Cap loads

Type	Dir	Arm ft	Mag1	x1/L	Mag2	x2/L
Moment	X		-918.00 k-ft	0.50		

Bearing loads

Line #	Bearing #	Dir	Load kips
1	1	Z	-11.48
1	2	Z	-11.48
1	3	Z	-11.48
1	4	Z	-11.48

Auto generation details:

Selected Live Load for BR generation

Load: Design Truck
Load: Design Truck + Lane Load
Load: Design Tandem + Lane Load
Load: Two Design Trucks + Lane Load
Load: Two Design Tandem + Lane Load
Number of loaded lanes = 3
Contributing longitudinal length = 231.75 ft

Loadcase ID: BR4 Name:

Multiplier = 1.000

Cap loads

Type	Dir	Arm ft	Mag1	x1/L	Mag2	x2/L
Moment	X		-720.00 k-ft	0.50		

Bearing loads

Line #	Bearing #	Dir	Load kips
1	1	Z	-9.00
1	2	Z	-9.00
1	3	Z	-9.00
1	4	Z	-9.00

Auto generation details:

Selected Live Load for BR generation

Load: Design Truck
Load: Design Truck + Lane Load
Load: Design Tandem + Lane Load
Load: Two Design Trucks + Lane Load
Load: Two Design Tandem + Lane Load
Number of loaded lanes = 2
Contributing longitudinal length = 231.75 ft

Loadcase ID: BR5 Name:

Multiplier = 1.000

Cap loads

Type	Dir	Arm ft	Mag1	x1/L	Mag2	x2/L
Moment	X		-432.00 k-ft	0.50		

Bearing loads

Line #	Bearing #	Dir	Load kips
1	1	Z	-5.40
1	2	Z	-5.40
1	3	Z	-5.40
1	4	Z	-5.40

Auto generation details:

Selected Live Load for BR generation

Load: Design Truck
Load: Design Truck + Lane Load
Load: Design Tandem + Lane Load
Load: Two Design Trucks + Lane Load
Load: Two Design Tandem + Lane Load
Number of loaded lanes = 1
Contributing longitudinal length = 231.75 ft

Loadcase ID: BR6 Name:

Multiplier = 1.000

Cap loads

Type	Dir	Arm ft	Mag1	x1/L	Mag2	x2/L
Moment	X		-1404.00 k-ft	0.50		

Bearing loads

Line #	Bearing #	Dir	Load kips
1	1	Z	-17.55
1	2	Z	-17.55
1	3	Z	-17.55
1	4	Z	-17.55

Auto generation details:

Selected Live Load for BR generation

Load: Design Truck
Load: Design Truck + Lane Load
Load: Design Tandem + Lane Load
Load: Two Design Trucks + Lane Load
Load: Two Design Tandem + Lane Load
Number of loaded lanes = 6
Contributing longitudinal length = 231.75 ft

Loadcase ID: BR7 Name:

Multiplier = 1.000

Cap loads

Type	Dir	Arm ft	Mag1	x1/L	Mag2	x2/L
Moment	X		-720.00 k-ft	0.50		

Bearing loads

Line #	Bearing #	Dir	Load kips
1	1	Z	-9.00
1	2	Z	-9.00
1	3	Z	-9.00
1	4	Z	-9.00

Auto generation details:

Selected Live Load for BR generation

Load: Design Truck
Load: Design Truck + Lane Load
Load: Design Tandem + Lane Load
Load: Two Design Trucks + Lane Load
Load: Two Design Tandem + Lane Load
Number of loaded lanes = 2
Contributing longitudinal length = 231.75 ft

Selected load groups

STRENGTH GROUP I
STRENGTH GROUP II
FDOT STRENGTH GROUP III
FDOT STRENGTH GROUP V
FDOT SERVICE GROUP I
FDOT SERVICE GROUP IV
FATIGUE I

COMBINATIONS

FOOTING DESIGN

ISOLATED FOOTING DESIGN

Code: AASHTO LRFD 8
Units: US
Pier View: Upstation.

GEOMETRY

Name : f1
Shape : Rectangular, Type : Pile/Shaft Cap
Bf(X) = 50.00 ft, Hf(Z) = 50.00 ft, Thickness(Y) = 72.00 in
Ag = 2500.00 ft^2, Ix = 13500.00 ft^2, Iz = 13500.00 ft^2
Footing eccentric: Start at X = -25.00 ft from centerline of column.
Footing eccentric: Start at Z = 25.00 ft from centerline of column.
Columns located on the footing:
Column No. 1 at x = 0.00 ft, Rectangular 192.00 in x 120.00 in
Piles: Round Size: W = 20.00 in
Service Capacity: 330.00 kips
Factored Capacity: 330.00 kips
Lateral Resistance: 0.00 kips
Piles Section Properties: Area = 2.18 ft^2 Ix = 7853.98 in^4 Iz = 7853.98 in^4
Pile Pattern Name: N81P1
Pile Pattern concentric.
Pile Pattern Type: Grid-based
Number of Piles: 81
Grid distances:
X1 = 240.000
X2 = 180.000
X3 = 120.000
X4 = 60.000
Z1 = 240.000
Z2 = 180.000
Z3 = 120.000
Z4 = 60.000
1 1 1 1 1 1 1 1 1
1 1 1 1 1 1 1 1 1
1 1 1 1 1 1 1 1 1
1 1 1 1 1 1 1 1 1
1 1 1 1 1 1 1 1 1
1 1 1 1 1 1 1 1 1
1 1 1 1 1 1 1 1 1
1 1 1 1 1 1 1 1 1
1 1 1 1 1 1 1 1 1

DESIGN PARAMETERS

f'c = 4000.00 psi	fy = 60000.00 psi
phi tens = 0.90	
phi comp = 0.75	phi shear = 0.90
Tens above = 0.005	Comp below = 0.002
Ec = 4266.2 ksi	Es = 29000.0 ksi
Crack check as per current LRFD	
Crack control Exposure = 1.00	
Concrete Type : Normal Weight.	

Reinforcement Schedule

Dir	Quantity	Size	Bar dist. in	As total in^2	Spacing in	Hook
X	225	US#8[M25]	15.50	177.75	2.65	None
X	38	US#8[M25]	68.50	30.02	16.03	None
Z	337	US#8[M25]	16.50	266.23	1.76	None
Z	38	US#8[M25]	67.50	30.02	16.03	None

Pile Reactions, Service **Load Effect @ Footing Bot.**

Pile	X in	Z in	Batter X degree	Batter Z degree	comb	Ovs	P kips	Mxx kft	Mzz kft	Pile Reac. kips
1	60.00	-240.0	0	0	294	1.000	-13023.97	-3167.10	22172.87	198.33
					344	1.000	-13023.97	3167.10	-22172.87	123.25
2	120.00	-240.0	0	0	298	1.000	-13354.12	-4843.80	17085.85	191.03
					344	1.000	-13023.97	3167.10	-22172.87	131.46
3	180.00	-240.0	0	0	298	1.000	-13354.12	-4843.80	17085.85	184.70
					344	1.000	-13023.97	3167.10	-22172.87	139.67
4	240.00	-240.0	0	0	298	1.000	-13354.12	-4843.80	17085.85	178.37
					345	1.000	-12889.47	2484.00	-20862.32	147.72
5	300.00	-240.0	0	0	293	1.000	-13354.12	-4843.80	-7569.54	172.04
					349	1.000	-12400.35	0.00	8514.77	153.09
6	360.00	-240.0	0	0	335	1.000	-13354.12	-4843.80	-17085.84	178.37
					306	1.000	-12889.47	2484.00	20862.32	147.72
7	420.00	-240.0	0	0	335	1.000	-13354.12	-4843.80	-17085.84	184.70
					301	1.000	-13023.97	3167.10	22172.87	139.67
8	480.00	-240.0	0	0	335	1.000	-13354.12	-4843.80	-17085.84	191.03
					301	1.000	-13023.97	3167.10	22172.87	131.46
9	540.00	-240.0	0	0	337	1.000	-13023.97	-3167.10	-22172.87	198.33
					301	1.000	-13023.97	3167.10	22172.87	123.25
10	60.00	-180.0	0	0	294	1.000	-13023.97	-3167.10	22172.87	197.16
					344	1.000	-13023.97	3167.10	-22172.87	124.42
11	120.00	-180.0	0	0	298	1.000	-13354.12	-4843.80	17085.85	189.23
					344	1.000	-13023.97	3167.10	-22172.87	132.63
12	180.00	-180.0	0	0	298	1.000	-13354.12	-4843.80	17085.85	182.90
					344	1.000	-13023.97	3167.10	-22172.87	140.85
13	240.00	-180.0	0	0	298	1.000	-13354.12	-4843.80	17085.85	176.58
					345	1.000	-12889.47	2484.00	-20862.32	148.64
14	300.00	-180.0	0	0	293	1.000	-13354.12	-4843.80	-7569.54	170.25
					349	1.000	-12400.35	0.00	8514.77	153.09
15	360.00	-180.0	0	0	335	1.000	-13354.12	-4843.80	-17085.84	176.58
					306	1.000	-12889.47	2484.00	20862.32	148.64
16	420.00	-180.0	0	0	335	1.000	-13354.12	-4843.80	-17085.84	182.90
					301	1.000	-13023.97	3167.10	22172.87	140.85
17	480.00	-180.0	0	0	335	1.000	-13354.12	-4843.80	-17085.84	189.23
					301	1.000	-13023.97	3167.10	22172.87	132.63
18	540.00	-180.0	0	0	337	1.000	-13023.97	-3167.10	-22172.87	197.16
					301	1.000	-13023.97	3167.10	22172.87	124.42
19	60.00	-120.0	0	0	294	1.000	-13023.97	-3167.10	22172.87	195.98
					344	1.000	-13023.97	3167.10	-22172.87	125.60
20	120.00	-120.0	0	0	294	1.000	-13023.97	-3167.10	22172.87	187.77
					344	1.000	-13023.97	3167.10	-22172.87	133.81
21	180.00	-120.0	0	0	298	1.000	-13354.12	-4843.80	17085.85	181.11
					345	1.000	-12889.47	2484.00	-20862.32	141.84
22	240.00	-120.0	0	0	298	1.000	-13354.12	-4843.80	17085.85	174.78
					345	1.000	-12889.47	2484.00	-20862.32	149.56
23	300.00	-120.0	0	0	293	1.000	-13354.12	-4843.80	-7569.54	168.45
					349	1.000	-12400.35	0.00	8514.77	153.09
24	360.00	-120.0	0	0	335	1.000	-13354.12	-4843.80	-17085.84	174.78
					306	1.000	-12889.47	2484.00	20862.32	149.56
25	420.00	-120.0	0	0	335	1.000	-13354.12	-4843.80	-17085.84	181.11
					306	1.000	-12889.47	2484.00	20862.32	141.84
26	480.00	-120.0	0	0	337	1.000	-13023.97	-3167.10	-22172.87	187.77
					301	1.000	-13023.97	3167.10	22172.87	133.81
27	540.00	-120.0	0	0	337	1.000	-13023.97	-3167.10	-22172.87	195.98
					301	1.000	-13023.97	3167.10	22172.87	125.60
28	60.00	-60.0	0	0	294	1.000	-13023.97	-3167.10	22172.87	194.81
					344	1.000	-13023.97	3167.10	-22172.87	126.77
29	120.00	-60.0	0	0	294	1.000	-13023.97	-3167.10	22172.87	186.60
					344	1.000	-13023.97	3167.10	-22172.87	134.98

Pile	X in	Z in	Batter X degree	Batter Z degree	comb	Ovs	P kips	Mxx kft	Mzz kft	Pile Reac. kips
	180.00	-60.0	0	0	298	1.000	-13354.12	-4843.80	17085.85	179.32
					345	1.000	-12889.47	2484.00	-20862.32	142.76
31	240.00	-60.0	0	0	298	1.000	-13354.12	-4843.80	17085.85	172.99
					350	1.000	-12400.35	0.00	-8514.77	149.94
32	300.00	-60.0	0	0	293	1.000	-13354.12	-4843.80	-7569.54	166.66
					349	1.000	-12400.35	0.00	8514.77	153.09
33	360.00	-60.0	0	0	335	1.000	-13354.12	-4843.80	-17085.84	172.99
					349	1.000	-12400.35	0.00	8514.77	149.94
34	420.00	-60.0	0	0	335	1.000	-13354.12	-4843.80	-17085.84	179.32
					306	1.000	-12889.47	2484.00	20862.32	142.76
35	480.00	-60.0	0	0	337	1.000	-13023.97	-3167.10	-22172.87	186.60
					301	1.000	-13023.97	3167.10	22172.87	134.98
36	540.00	-60.0	0	0	337	1.000	-13023.97	-3167.10	-22172.87	194.81
					301	1.000	-13023.97	3167.10	22172.87	126.77
37	60.00	0.0	0	0	294	1.000	-13023.97	-3167.10	22172.87	193.64
					337	1.000	-13023.97	-3167.10	-22172.87	127.94
38	120.00	0.0	0	0	294	1.000	-13023.97	-3167.10	22172.87	185.43
					338	1.000	-12889.47	-2484.00	-20862.32	135.95
39	180.00	0.0	0	0	298	1.000	-13354.12	-4843.80	17085.85	177.52
					338	1.000	-12889.47	-2484.00	-20862.32	143.68
40	240.00	0.0	0	0	298	1.000	-13354.12	-4843.80	17085.85	171.19
					350	1.000	-12400.35	0.00	-8514.77	149.94
41	300.00	0.0	0	0	293	1.000	-13354.12	-4843.80	-7569.54	164.87
					349	1.000	-12400.35	0.00	8514.77	153.09
42	360.00	0.0	0	0	335	1.000	-13354.12	-4843.80	-17085.84	171.19
					349	1.000	-12400.35	0.00	8514.77	149.94
43	420.00	0.0	0	0	335	1.000	-13354.12	-4843.80	-17085.84	177.52
					299	1.000	-12889.47	-2484.00	20862.32	143.68
44	480.00	0.0	0	0	337	1.000	-13023.97	-3167.10	-22172.87	185.43
					299	1.000	-12889.47	-2484.00	20862.32	135.95
45	540.00	0.0	0	0	337	1.000	-13023.97	-3167.10	-22172.87	193.64
					294	1.000	-13023.97	-3167.10	22172.87	127.94
46	60.00	60.0	0	0	301	1.000	-13023.97	3167.10	22172.87	194.81
					337	1.000	-13023.97	-3167.10	-22172.87	126.77
47	120.00	60.0	0	0	301	1.000	-13023.97	3167.10	22172.87	186.60
					337	1.000	-13023.97	-3167.10	-22172.87	134.98
48	180.00	60.0	0	0	305	1.000	-13354.12	4843.80	17085.85	179.32
					338	1.000	-12889.47	-2484.00	-20862.32	142.76
49	240.00	60.0	0	0	305	1.000	-13354.12	4843.80	17085.85	172.99
					350	1.000	-12400.35	0.00	-8514.77	149.94
50	300.00	60.0	0	0	300	1.000	-13354.12	4843.80	-7569.54	166.66
					349	1.000	-12400.35	0.00	8514.77	153.09
51	360.00	60.0	0	0	342	1.000	-13354.12	4843.80	-17085.84	172.99
					349	1.000	-12400.35	0.00	8514.77	149.94
52	420.00	60.0	0	0	342	1.000	-13354.12	4843.80	-17085.84	179.32
					299	1.000	-12889.47	-2484.00	20862.32	142.76
53	480.00	60.0	0	0	344	1.000	-13023.97	3167.10	-22172.87	186.60
					294	1.000	-13023.97	-3167.10	22172.87	134.98
54	540.00	60.0	0	0	344	1.000	-13023.97	3167.10	-22172.87	194.81
					294	1.000	-13023.97	-3167.10	22172.87	126.77
55	60.00	120.0	0	0	301	1.000	-13023.97	3167.10	22172.87	195.98
					337	1.000	-13023.97	-3167.10	-22172.87	125.60
56	120.00	120.0	0	0	301	1.000	-13023.97	3167.10	22172.87	187.77
					337	1.000	-13023.97	-3167.10	-22172.87	133.81
57	180.00	120.0	0	0	305	1.000	-13354.12	4843.80	17085.85	181.11
					338	1.000	-12889.47	-2484.00	-20862.32	141.84
58	240.00	120.0	0	0	305	1.000	-13354.12	4843.80	17085.85	174.78
					338	1.000	-12889.47	-2484.00	-20862.32	149.56
59	300.00	120.0	0	0	300	1.000	-13354.12	4843.80	-7569.54	168.45

Pile	X in	Z in	Batter X degree	Batter Z degree	comb	Ovs	P kips	Mxx kft	Mzz kft	Pile Reac. kips
					349	1.000	-12400.35	0.00	8514.77	153.09
60	360.00	120.0	0	0	342	1.000	-13354.12	4843.80	-17085.84	174.78
					299	1.000	-12889.47	-2484.00	20862.32	149.56
61	420.00	120.0	0	0	342	1.000	-13354.12	4843.80	-17085.84	181.11
					299	1.000	-12889.47	-2484.00	20862.32	141.84
62	480.00	120.0	0	0	344	1.000	-13023.97	3167.10	-22172.87	187.77
					294	1.000	-13023.97	-3167.10	22172.87	133.81
63	540.00	120.0	0	0	344	1.000	-13023.97	3167.10	-22172.87	195.98
					294	1.000	-13023.97	-3167.10	22172.87	125.60
64	60.00	180.0	0	0	301	1.000	-13023.97	3167.10	22172.87	197.16
					337	1.000	-13023.97	-3167.10	-22172.87	124.42
65	120.00	180.0	0	0	305	1.000	-13354.12	4843.80	17085.85	189.23
					337	1.000	-13023.97	-3167.10	-22172.87	132.63
66	180.00	180.0	0	0	305	1.000	-13354.12	4843.80	17085.85	182.90
					337	1.000	-13023.97	-3167.10	-22172.87	140.85
67	240.00	180.0	0	0	305	1.000	-13354.12	4843.80	17085.85	176.58
					338	1.000	-12889.47	-2484.00	-20862.32	148.64
68	300.00	180.0	0	0	300	1.000	-13354.12	4843.80	-7569.54	170.25
					349	1.000	-12400.35	0.00	8514.77	153.09
69	360.00	180.0	0	0	342	1.000	-13354.12	4843.80	-17085.84	176.58
					299	1.000	-12889.47	-2484.00	20862.32	148.64
70	420.00	180.0	0	0	342	1.000	-13354.12	4843.80	-17085.84	182.90
					294	1.000	-13023.97	-3167.10	22172.87	140.85
71	480.00	180.0	0	0	342	1.000	-13354.12	4843.80	-17085.84	189.23
					294	1.000	-13023.97	-3167.10	22172.87	132.63
72	540.00	180.0	0	0	344	1.000	-13023.97	3167.10	-22172.87	197.16
					294	1.000	-13023.97	-3167.10	22172.87	124.42
73	60.00	240.0	0	0	301	1.000	-13023.97	3167.10	22172.87	198.33
					337	1.000	-13023.97	-3167.10	-22172.87	123.25
74	120.00	240.0	0	0	305	1.000	-13354.12	4843.80	17085.85	191.03
					337	1.000	-13023.97	-3167.10	-22172.87	131.46
75	180.00	240.0	0	0	305	1.000	-13354.12	4843.80	17085.85	184.70
					337	1.000	-13023.97	-3167.10	-22172.87	139.67
76	240.00	240.0	0	0	305	1.000	-13354.12	4843.80	17085.85	178.37
					338	1.000	-12889.47	-2484.00	-20862.32	147.72
77	300.00	240.0	0	0	300	1.000	-13354.12	4843.80	-7569.54	172.04
					349	1.000	-12400.35	0.00	8514.77	153.09
78	360.00	240.0	0	0	342	1.000	-13354.12	4843.80	-17085.84	178.37
					299	1.000	-12889.47	-2484.00	20862.32	147.72
79	420.00	240.0	0	0	342	1.000	-13354.12	4843.80	-17085.84	184.70
					294	1.000	-13023.97	-3167.10	22172.87	139.67
80	480.00	240.0	0	0	342	1.000	-13354.12	4843.80	-17085.84	191.03
					294	1.000	-13023.97	-3167.10	22172.87	131.46
81	540.00	240.0	0	0	344	1.000	-13023.97	3167.10	-22172.87	198.33
					294	1.000	-13023.97	-3167.10	22172.87	123.25

Pile Reactions, Factored **Load Effect @ Footing Bot.**

Pile	X in	Z in	Batter X degree	Batter Z degree	comb	Ovs	P kips	Mxx kft	Mzz kft	Pile Reac. kips
1	60.0	-240.0	0	0	2	---	-16615.99	-5542.43	30475.76	258.50
					52	---	-12227.43	5542.43	-30475.76	97.60
2	120.0	-240.0	0	0	6	---	-17193.76	-8476.65	21573.46	248.80
					52	---	-12227.43	5542.43	-30475.76	108.88
3	180.0	-240.0	0	0	6	---	-17193.76	-8476.65	21573.46	240.81
					288	---	-11977.99	4275.59	-29215.74	119.90
4	240.0	-240.0	0	0	6	---	-17193.76	-8476.65	21573.46	232.82
					68	---	-11136.10	0.00	-20309.73	129.96
5	300.0	-240.0	0	0	1	---	-17193.76	-8476.65	-21573.46	224.83
					60	---	-11136.10	0.00	0.00	137.48
6	360.0	-240.0	0	0	1	---	-17193.76	-8476.65	-21573.46	232.82
					67	---	-11136.10	0.00	20309.73	129.96
7	420.0	-240.0	0	0	1	---	-17193.76	-8476.65	-21573.46	240.81
					245	---	-11977.99	4275.59	29215.74	119.90
8	480.0	-240.0	0	0	1	---	-17193.76	-8476.65	-21573.46	248.80
					51	---	-12227.43	5542.43	30475.76	108.88
9	540.0	-240.0	0	0	3	---	-16615.99	-5542.43	-30475.76	258.50
					51	---	-12227.43	5542.43	30475.76	97.60
10	60.0	-180.0	0	0	2	---	-16615.99	-5542.43	30475.76	256.44
					52	---	-12227.43	5542.43	-30475.76	99.65
11	120.0	-180.0	0	0	6	---	-17193.76	-8476.65	21573.46	245.66
					288	---	-11977.99	4275.59	-29215.74	110.66
12	180.0	-180.0	0	0	6	---	-17193.76	-8476.65	21573.46	237.67
					288	---	-11977.99	4275.59	-29215.74	121.48
13	240.0	-180.0	0	0	6	---	-17193.76	-8476.65	21573.46	229.68
					68	---	-11136.10	0.00	-20309.73	129.96
14	300.0	-180.0	0	0	1	---	-17193.76	-8476.65	-21573.46	221.69
					60	---	-11136.10	0.00	0.00	137.48
15	360.0	-180.0	0	0	1	---	-17193.76	-8476.65	-21573.46	229.68
					67	---	-11136.10	0.00	20309.73	129.96
16	420.0	-180.0	0	0	1	---	-17193.76	-8476.65	-21573.46	237.67
					245	---	-11977.99	4275.59	29215.74	121.48
17	480.0	-180.0	0	0	1	---	-17193.76	-8476.65	-21573.46	245.66
					245	---	-11977.99	4275.59	29215.74	110.66
18	540.0	-180.0	0	0	3	---	-16615.99	-5542.43	-30475.76	256.44
					51	---	-12227.43	5542.43	30475.76	99.65
19	60.0	-120.0	0	0	2	---	-16615.99	-5542.43	30475.76	254.39
					288	---	-11977.99	4275.59	-29215.74	101.43
20	120.0	-120.0	0	0	2	---	-16615.99	-5542.43	30475.76	243.10
					288	---	-11977.99	4275.59	-29215.74	112.25
21	180.0	-120.0	0	0	6	---	-17193.76	-8476.65	21573.46	234.53
					68	---	-11136.10	0.00	-20309.73	122.44
22	240.0	-120.0	0	0	6	---	-17193.76	-8476.65	21573.46	226.54
					68	---	-11136.10	0.00	-20309.73	129.96
23	300.0	-120.0	0	0	1	---	-17193.76	-8476.65	-21573.46	218.55
					60	---	-11136.10	0.00	0.00	137.48
24	360.0	-120.0	0	0	1	---	-17193.76	-8476.65	-21573.46	226.54
					67	---	-11136.10	0.00	20309.73	129.96
25	420.0	-120.0	0	0	1	---	-17193.76	-8476.65	-21573.46	234.53
					67	---	-11136.10	0.00	20309.73	122.44
26	480.0	-120.0	0	0	3	---	-16615.99	-5542.43	-30475.76	243.10
					245	---	-11977.99	4275.59	29215.74	112.25
27	540.0	-120.0	0	0	3	---	-16615.99	-5542.43	-30475.76	254.39
					245	---	-11977.99	4275.59	29215.74	101.43
28	60.0	-60.0	0	0	2	---	-16615.99	-5542.43	30475.76	252.34
					288	---	-11977.99	4275.59	-29215.74	103.01
29	120.0	-60.0	0	0	2	---	-16615.99	-5542.43	30475.76	241.05
					288	---	-11977.99	4275.59	-29215.74	113.83

Pile	X in	Z in	Batter X degree	Batter Z degree	comb	Ovs	P kips	Mxx kft	Mzz kft	Pile Reac. kips
	180.0	-60.0	0	0	6	---	-17193.76	-8476.65	21573.46	231.39
					68	---	-11136.10	0.00	-20309.73	122.44
31	240.0	-60.0	0	0	6	---	-17193.76	-8476.65	21573.46	223.40
					68	---	-11136.10	0.00	-20309.73	129.96
32	300.0	-60.0	0	0	1	---	-17193.76	-8476.65	-21573.46	215.41
					60	---	-11136.10	0.00	0.00	137.48
33	360.0	-60.0	0	0	1	---	-17193.76	-8476.65	-21573.46	223.40
					67	---	-11136.10	0.00	20309.73	129.96
34	420.0	-60.0	0	0	1	---	-17193.76	-8476.65	-21573.46	231.39
					67	---	-11136.10	0.00	20309.73	122.44
35	480.0	-60.0	0	0	3	---	-16615.99	-5542.43	-30475.76	241.05
					245	---	-11977.99	4275.59	29215.74	113.83
36	540.0	-60.0	0	0	3	---	-16615.99	-5542.43	-30475.76	252.34
					245	---	-11977.99	4275.59	29215.74	103.01
37	60.0	0.0	0	0	2	---	-16615.99	-5542.43	30475.76	250.28
					281	---	-11977.99	-4275.59	-29215.74	104.59
38	120.0	0.0	0	0	2	---	-16615.99	-5542.43	30475.76	239.00
					68	---	-11136.10	0.00	-20309.73	114.92
39	180.0	0.0	0	0	6	---	-17193.76	-8476.65	21573.46	228.25
					68	---	-11136.10	0.00	-20309.73	122.44
40	240.0	0.0	0	0	6	---	-17193.76	-8476.65	21573.46	220.26
					68	---	-11136.10	0.00	-20309.73	129.96
41	300.0	0.0	0	0	1	---	-17193.76	-8476.65	-21573.46	212.27
					60	---	-11136.10	0.00	0.00	137.48
42	360.0	0.0	0	0	1	---	-17193.76	-8476.65	-21573.46	220.26
					67	---	-11136.10	0.00	20309.73	129.96
43	420.0	0.0	0	0	1	---	-17193.76	-8476.65	-21573.46	228.25
					67	---	-11136.10	0.00	20309.73	122.44
44	480.0	0.0	0	0	3	---	-16615.99	-5542.43	-30475.76	239.00
					67	---	-11136.10	0.00	20309.73	114.92
45	540.0	0.0	0	0	3	---	-16615.99	-5542.43	-30475.76	250.28
					238	---	-11977.99	-4275.59	29215.74	104.59
46	60.0	60.0	0	0	9	---	-16615.99	5542.43	30475.76	252.34
					281	---	-11977.99	-4275.59	-29215.74	103.01
47	120.0	60.0	0	0	9	---	-16615.99	5542.43	30475.76	241.05
					281	---	-11977.99	-4275.59	-29215.74	113.83
48	180.0	60.0	0	0	13	---	-17193.76	8476.65	21573.46	231.39
					68	---	-11136.10	0.00	-20309.73	122.44
49	240.0	60.0	0	0	13	---	-17193.76	8476.65	21573.46	223.40
					68	---	-11136.10	0.00	-20309.73	129.96
50	300.0	60.0	0	0	8	---	-17193.76	8476.65	-21573.46	215.41
					60	---	-11136.10	0.00	0.00	137.48
51	360.0	60.0	0	0	8	---	-17193.76	8476.65	-21573.46	223.40
					67	---	-11136.10	0.00	20309.73	129.96
52	420.0	60.0	0	0	8	---	-17193.76	8476.65	-21573.46	231.39
					67	---	-11136.10	0.00	20309.73	122.44
53	480.0	60.0	0	0	10	---	-16615.99	5542.43	-30475.76	241.05
					238	---	-11977.99	-4275.59	29215.74	113.83
54	540.0	60.0	0	0	10	---	-16615.99	5542.43	-30475.76	252.34
					238	---	-11977.99	-4275.59	29215.74	103.01
55	60.0	120.0	0	0	9	---	-16615.99	5542.43	30475.76	254.39
					281	---	-11977.99	-4275.59	-29215.74	101.43
56	120.0	120.0	0	0	9	---	-16615.99	5542.43	30475.76	243.10
					281	---	-11977.99	-4275.59	-29215.74	112.25
57	180.0	120.0	0	0	13	---	-17193.76	8476.65	21573.46	234.53
					68	---	-11136.10	0.00	-20309.73	122.44
58	240.0	120.0	0	0	13	---	-17193.76	8476.65	21573.46	226.54
					68	---	-11136.10	0.00	-20309.73	129.96
59	300.0	120.0	0	0	8	---	-17193.76	8476.65	-21573.46	218.55

Pile	X in	Z in	Batter X degree	Batter Z degree	comb	Ovs	P kips	Mxx kft	Mzz kft	Pile Reac. kips
					60	---	-11136.10	0.00	0.00	137.48
60	360.0	120.0	0	0	8	---	-17193.76	8476.65	-21573.46	226.54
					67	---	-11136.10	0.00	20309.73	129.96
61	420.0	120.0	0	0	8	---	-17193.76	8476.65	-21573.46	234.53
					67	---	-11136.10	0.00	20309.73	122.44
62	480.0	120.0	0	0	10	---	-16615.99	5542.43	-30475.76	243.10
					238	---	-11977.99	-4275.59	29215.74	112.25
63	540.0	120.0	0	0	10	---	-16615.99	5542.43	-30475.76	254.39
					238	---	-11977.99	-4275.59	29215.74	101.43
64	60.0	180.0	0	0	9	---	-16615.99	5542.43	30475.76	256.44
					45	---	-12227.43	-5542.43	-30475.76	99.65
65	120.0	180.0	0	0	13	---	-17193.76	8476.65	21573.46	245.66
					281	---	-11977.99	-4275.59	-29215.74	110.66
66	180.0	180.0	0	0	13	---	-17193.76	8476.65	21573.46	237.67
					281	---	-11977.99	-4275.59	-29215.74	121.48
67	240.0	180.0	0	0	13	---	-17193.76	8476.65	21573.46	229.68
					68	---	-11136.10	0.00	-20309.73	129.96
68	300.0	180.0	0	0	8	---	-17193.76	8476.65	-21573.46	221.69
					60	---	-11136.10	0.00	0.00	137.48
69	360.0	180.0	0	0	8	---	-17193.76	8476.65	-21573.46	229.68
					67	---	-11136.10	0.00	20309.73	129.96
70	420.0	180.0	0	0	8	---	-17193.76	8476.65	-21573.46	237.67
					238	---	-11977.99	-4275.59	29215.74	121.48
71	480.0	180.0	0	0	8	---	-17193.76	8476.65	-21573.46	245.66
					238	---	-11977.99	-4275.59	29215.74	110.66
72	540.0	180.0	0	0	10	---	-16615.99	5542.43	-30475.76	256.44
					44	---	-12227.43	-5542.43	30475.76	99.65
73	60.0	240.0	0	0	9	---	-16615.99	5542.43	30475.76	258.50
					45	---	-12227.43	-5542.43	-30475.76	97.60
74	120.0	240.0	0	0	13	---	-17193.76	8476.65	21573.46	248.80
					45	---	-12227.43	-5542.43	-30475.76	108.88
75	180.0	240.0	0	0	13	---	-17193.76	8476.65	21573.46	240.81
					281	---	-11977.99	-4275.59	-29215.74	119.90
76	240.0	240.0	0	0	13	---	-17193.76	8476.65	21573.46	232.82
					68	---	-11136.10	0.00	-20309.73	129.96
77	300.0	240.0	0	0	8	---	-17193.76	8476.65	-21573.46	224.83
					60	---	-11136.10	0.00	0.00	137.48
78	360.0	240.0	0	0	8	---	-17193.76	8476.65	-21573.46	232.82
					67	---	-11136.10	0.00	20309.73	129.96
79	420.0	240.0	0	0	8	---	-17193.76	8476.65	-21573.46	240.81
					238	---	-11977.99	-4275.59	29215.74	119.90
80	480.0	240.0	0	0	8	---	-17193.76	8476.65	-21573.46	248.80
					44	---	-12227.43	-5542.43	30475.76	108.88
81	540.0	240.0	0	0	10	---	-16615.99	5542.43	-30475.76	258.50
					44	---	-12227.43	-5542.43	30475.76	97.60

Pile Reactions: Notes

Load effects on pile are calculated at centroid of the bottom of the footing.
Both the max. and min. pile reaction are reported for each individual pile.
Positive pile reaction represents pile subject to compression load; negative pile reaction represents pile subject to uplift.
Coordinate system of pile layout see Geometry Tab>Footing Pile>Edit Pile.

Pile Lateral Resistance Check X

Controlling load combination number	67
Lateral loads on all piles(kips)	373.286
Batter angle(deg)	0.000
Available lateral resistance due to batter(kips)	0.000
Direct shear resistance of all piles(kips)	0.000
Total pile lateral resistance(kips)	0.000
Is the lateral resistance due to batter greater than lateral load on all piles?	NO
Is the total pile lateral resistance greater than the lateral load on all piles?	NO

Pile Lateral Resistance Check Z

Controlling load combination number	48
Lateral loads on all piles(kips)	122.850
Batter angle(deg)	0.000
Available lateral resistance due to batter(kips)	0.000
Direct shear resistance of all piles(kips)	0.000
Total pile lateral resistance(kips)	0.000
Is the lateral resistance due to batter greater than lateral load on all piles?	NO
Is the total pile lateral resistance greater than the lateral load on all piles?	NO

Max. Pile Reaction Used in Design:

Factored pile reaction	258.50 kips	Comb 2
Service pile reaction	198.33 kips	Comb 294

Flexure

Dir	Loc ft	d in	Mmax kft	Comb	CL	Asb_req in^2	Asb_prv in^2	Asb_eff in^2	Ast_req in^2	Ast_prv in^2	Ast_eff in^2
X	-8.00	56.50	43003.5	2	T	177.32	177.75	177.75	30.00	30.02	30.02
X	8.00	56.50	43003.5	2	T	177.32	177.75	177.75	30.00	30.02	30.02
Z	-5.00	55.50	61693.9	2	T	265.73	**266.23****	**266.23****	30.00	30.02	30.02
Z	5.00	55.50	61693.9	2	T	265.73	**266.23****	**266.23****	30.00	30.02	30.02

Flexure Note

CL: Section classification as per LRFD 2006 interims for provided reinforcement.
C = Compression controlled, I = In-Transition, T = Tension controlled.
Required reinforcement is based on phi for tension controlled sections..
** Required spacing of bars violated.

NOTE: PRELIMINARY CALCULATIONS ARE TO DETERMINE PILE LOADS. VALUES IN RED WILL BE ADDRESSED IN FINAL PIER DESIGN.

Crack control and fatigue check

Cracking/Fatigue

Dir	Loc ft	d in	Service Mmax kft	Service Comb	Service fs ksi	Service Srq in	Service Spr in	Fatigue fs ksi	Fatigue FTH ksi
X	-8.00	56.50	30982.0	294	40.01**	13.5	2.6	0.00	0.00
X	8.00	56.50	30982.0	294	40.01**	13.5	2.6	0.00	0.00
Z	-5.00	55.50	44549.2	294	39.78**	13.5	1.8	0.00	0.00
Z	5.00	55.50	44549.2	294	39.78**	13.5	1.8	0.00	0.00

Cracking/Fatigue Note

** Stress (fs) is higher than steel yield strength (0.6*fy).

NOTE: PRELIMINARY CALCULATIONS ARE TO DETERMINE PILE LOADS. VALUES IN RED WILL BE ADDRESSED IN FINAL PIER DESIGN.

One Way Shear (Beta-Theta Method)

Col	Dir	Dist ft	Comb	dv in	Vu kips	Mu kft	theta deg	beta	phi*Vc kips
1	X	-12.49	2	53.89	4146.3	41033.9	38.02	1.64	3012.0 *
	X	12.49	2	53.9	4146.3	41033.9	38.02	1.64	3012.0 *
	Z	-9.32	2	51.84	6252.6	64815.2	38.64	1.57	2772.8 *
	Z	9.32	2	51.84	6252.6	64815.2	38.64	1.57	2772.8 *

One Way Shear Note

* Shear resistance is less than applied shear force. You may increase the footing depth or provide stirrups.

Two Way Shear

#	Bo ft	Ao ft^2	Comb	Avg. dv in	Vu kips	phi*Vc kips
Columns						
1	69.62	293.94	2	52.86	17060.7*	10016.5
Piles - max						
1	19.08	28.96	2	52.86	258.5	2744.4
Piles - min						
1	19.08	28.96	2	52.86	258.5	2744.4

Two Way Shear Note

* Shear resistance is less than applied punching force.
TWO WAY SHEAR IN FOOTING IS NOT DESIGNED AND STIRRUPS ARE NOT CONSIDERED.

PIER 38-39

PROJECT DATA

PROJECT DATA

Project:	ABC Generated Bridge
User Job No.:	
Designer:	LEAP Bridge Concrete
Date:	2/25/2021
Checker:	
Checked date:	Feb/25/2021
State:	
State Job No.:	
Structure type:	Pier.
Pier View:	Upstation.
State Specification:	None
Code:	AASHTO LRFD 8th Edition
Comments:	

PIER GEOMETRY

Pier Info:

Pier View:	Upstation.
Pier Type:	Multi Column

Cap Shape

Cap Shape: Tapered
Top Elevations: start = 107.00 ft end = 107.00 ft
Depth(Z) = 120.00 in Skew angle = 0.00 Reduction of I = 1.000

Column Shape : Rectangular

Number of columns: 1

Column number 1

Location from the left edge of the cap(X): 31.00 ft
Elevations: bottom = 64.00 ft top = 103.25 ft Reduction of I = 1.000
Column Bottom is Fixed

Column Section Dimensions

Width(X) = 192.00 in Depth(Z) = 120.00 in

SUPERSTRUCTURE INFO

Superstructure info:

Total number of spans:	2
Span number rear to current pier:	1
Number of traffic lanes:	7
Barrier height :	33.86 in
Depth of slab :	0.00 in
Curb to curb distance:	85.850 ft

Beam info:

Height in	Section area in^2	Inertia (Ixx) in^4	Inertia (Iyy) in^4	Beam CG in
120.00	29932.92	68802416.00	2434942464.00	53.19

Span #	Span length ft	Bridge Width ft
1	163.500	89.000
2	133.200	89.000
		89.000

BEARING POINTS

Number of bearing lines: 1

First bearing line **Eccentricity = -0.00 ft**

Point	Distance ft
1	0.62
2	12.06
3	31.00
4	49.94
5	61.38

MATERIAL PROPERTIES

MATERIAL PROPERTIES

	Cap	Column	Footing
Concrete Type	normal	normal	normal
Concrete Strength (psi)	4000.00	5000.00	4000.00
Concrete Density (lb/ft3)	150.00	150.00	150.00
Concrete Modulus Ec (ksi)	4266.22	3000.00	4266.22
Steel Strength Fy (ksi)	60.00	60.00	60.00

DESIGN PARAMETERS

Resistance factors for reinf. concrete

Flexure and tension	0.90
Shear and torsion (normal)	0.90
Shear and torsion (lightweight)	0.90
Axial compression (ties)	0.75
Axial compression (spiral)	0.75
Compression in STM	0.70

Multi presence factors for live load

1 Lane	1.20
2 Lanes	1.00
3 Lanes	0.85
4 Lanes	0.65
5 Lanes	0.65
6 Lanes	0.65

Dynamic load allowance IM

	Truck	Lane	Fatigue
Cap	0.33	0.00	0.15
Column	0.33	0.00	0.15
Footing	0.00	0.00	0.00

	Exposure factors	Clear cover in	Clear side cover in
Cap	1.00	2.00	2.00
Column	1.00	2.00	
Footing	1.00	3.00	3.00

Degree of fixity in foundations for Moment Magnify Method: Ga = 5.00

SEISMIC DESIGN PARAMETERS

Strength Reduction factors for reinf. Concrete Seismic Design

Tension controlled	0.90
Shear and torsion (normal)	0.90
Shear and torsion (lightweight)	0.70
Compression Controlled (ties)	0.75
Compression Controlled (spiral)	0.75

Seismic Overstrength

Flexure and tension	1.30
Axial compression (ties)	1.30
Axial compression (spiral)	1.30

Response Modification Factor	1.00

Use core area for plastic hinging calculations.

Design Factors

Cap Design Factor	1.20
Footing Design Factor	1.20

Plastic Hinge Moment

Use actual computed Plastic Hinging Moment for each column in all combinations.

LOADS

Pier Info:

Pier View:	Upstation.

Load Cases: 17

Longitudinal Reaction: Simple Span Distribution

Selected Vehicles:	Design Truck Design Truck + Lane Load Design Tandem + Lane Load Two Design Trucks + Lane Load Two Design Tandem + Lane Load

Tranverse Positioning

Number of loaded lanes	All combinations
Live Load Positions	Constant Spacing
Minimum Distance from Curb	2.000000
Center to Center Spacing	10.000000

Generate Braking/Longitudinal Force	Selected
Generate Centrifugal Force	Not Selected

Number of single regular truck positions	14
Number of all possible combinations of regular truck positions	978

Loadcase ID: DC1 Name:

Multiplier = 1.000

Bearing loads

Line #	Bearing #	Dir	Load kips
1	1	Y	-1162.68
1	2	Y	-1162.68
1	3	Y	-1162.68
1	4	Y	-1162.68
1	5	Y	-1162.68

Auto generation details:

Generated Dead Load

Imported vertical load from CIP RC/PT Girder module: 5813.39 kips
Imported moment from CIP RC/PT Girder module: -16990.20 k-ft

Loadcase ID: DW1 Name:

Multiplier = 1.000

Bearing loads

Line #	Bearing #	Dir	Load kips
1	1	Y	-13.83
1	2	Y	-10.58
1	3	Y	-13.19
1	4	Y	-10.58
1	5	Y	-13.83

Auto generation details:

Generated Dead Load

Slab weight = Not included
Girder weight = Not included
Wearing weight = 418.00 plf
Barrier load = Not included

Loadcase ID: LL1 Name:

Multiplier = 1.000

Bearing loads

Line #	Bearing #	Dir	Load kips	Lane Load
1	1	Y	-51.87	
1	2	Y	-86.23	
1	3	Y	-111.41	
1	4	Y	-36.75	
1	5	Y	-67.42	
1	1	Y	-53.20	L
1	2	Y	-91.90	L
1	3	Y	-116.27	L
1	4	Y	-38.32	L
1	5	Y	-70.59	L

Auto generation details:

Generated Live Load

TRUCK IDENTIFICATION : Two Design Tandem + Lane Load
Positions of the center of each load measured from the left of the bridge :

TRUCK TYPE : Regular
Truck No. 1 - center line at: 76.52 - 3 axle on bearing line No. 1
Truck No. 2 - center line at: 56.52 - 3 axle on bearing line No. 1
Truck No. 3 - center line at: 46.52 - 3 axle on bearing line No. 1
Truck No. 4 - center line at: 36.52 - 3 axle on bearing line No. 1
Truck No. 5 - center line at: 26.52 - 3 axle on bearing line No. 1
Truck No. 6 - center line at: 16.52 - 3 axle on bearing line No. 1
Multi lane reduction factor used : 0.6500

Maximum effects in members :

Member 1	node 1	Fx = 840.6728
Member 1	node 2	Fx = -840.6728

Loadcase ID: LL2 Name:

Multiplier = 1.000

Bearing loads

Line #	Bearing #	Dir	Load kips	Lane Load
1	1	Y	-108.94	
1	2	Y	-94.15	
1	3	Y	-28.16	
1	4	Y	0.00	
1	5	Y	0.00	
1	1	Y	-115.35	L
1	2	Y	-96.49	L
1	3	Y	-30.26	L
1	4	Y	0.00	L
1	5	Y	0.00	L

Auto generation details:

Generated Live Load

TRUCK IDENTIFICATION : Two Design Tandem + Lane Load
Positions of the center of each load measured from the left of the bridge :

TRUCK TYPE : Regular
Truck No. 1 - center line at: 32.48 - 3 axle on bearing line No. 1
Truck No. 2 - center line at: 22.48 - 3 axle on bearing line No. 1
Truck No. 3 - center line at: 12.48 - 3 axle on bearing line No. 1
Multi lane reduction factor used : 0.8500

Maximum effects in members :

Member 1	node 1	Mz = -12103.5762
Member 1	node 2	Mz = 12103.5762
Member 5	node 2	Fy = 481.9559
Member 5	node 2	Mz = -12103.5762
Member 5	node 6	Fy = -481.9559
Member 5	node 6	Mz = 8247.9277
Member 4	node 6	Fy = 481.9559
Member 4	node 6	Mz = -8247.9277
Member 4	node 5	Fy = -481.9559

Loadcase ID: LL3 Name:

Multiplier = 1.000

Bearing loads

Line #	Bearing #	Dir	Load kips	Lane Load
1	1	Y	0.00	
1	2	Y	0.00	
1	3	Y	-28.16	
1	4	Y	-94.15	
1	5	Y	-108.94	
1	1	Y	0.00	L
1	2	Y	0.00	L
1	3	Y	-30.26	L
1	4	Y	-96.49	L
1	5	Y	-115.35	L

Auto generation details:

Generated Live Load

TRUCK IDENTIFICATION : Two Design Tandem + Lane Load
Positions of the center of each load measured from the left of the bridge :

TRUCK TYPE : Regular
Truck No. 1 - center line at: 76.52 - 3 axle on bearing line No. 1
Truck No. 2 - center line at: 66.52 - 3 axle on bearing line No. 1
Truck No. 3 - center line at: 56.52 - 3 axle on bearing line No. 1
Multi lane reduction factor used : 0.8500

Maximum effects in members :

Member 1	node 1	Mz = 12103.5762
Member 1	node 2	Mz = -12103.5762
Member 7	node 8	Fy = -481.9560
Member 7	node 7	Fy = 481.9560
Member 7	node 7	Mz = 8247.9277
Member 6	node 7	Mz = -8247.9277
Member 6	node 7	Fy = -481.9560
Member 6	node 2	Fy = 481.9560
Member 6	node 2	Mz = 12103.5762

Loadcase ID: LL4 Name:

Multiplier = 1.000

Bearing loads

Line #	Bearing #	Dir	Load kips	Lane Load
1	1	Y	0.00	
1	2	Y	0.00	
1	3	Y	0.00	
1	4	Y	-53.21	
1	5	Y	-128.17	
1	1	Y	0.00	L
1	2	Y	0.00	L
1	3	Y	-0.92	L
1	4	Y	-53.26	L
1	5	Y	-135.71	L

Auto generation details:

Generated Live Load

TRUCK IDENTIFICATION : Two Design Tandem + Lane Load
Positions of the center of each load measured from the left of the bridge :

TRUCK TYPE : Regular
Truck No. 1 - center line at: 76.52 - 3 axle on bearing line No. 1
Truck No. 2 - center line at: 66.52 - 3 axle on bearing line No. 1
Multi lane reduction factor used : 1.0000

Maximum effects in members :

Member 8	node 9	Fy = -306.1688
Member 8	node 8	Fy = 306.1688
Member 8	node 8	Mz = 3501.8052
Member 7	node 8	Mz = -3501.8052

Loadcase ID: LL5 Name:

Multiplier = 1.000

Bearing loads

Line #	Bearing #	Dir	Load kips	Lane Load
1	1	Y	-128.17	
1	2	Y	-53.21	
1	3	Y	0.00	
1	4	Y	0.00	
1	5	Y	0.00	
1	1	Y	-135.71	L
1	2	Y	-53.26	L
1	3	Y	-0.92	L
1	4	Y	0.00	L
1	5	Y	0.00	L

Auto generation details:

Generated Live Load

TRUCK IDENTIFICATION : Two Design Tandem + Lane Load
Positions of the center of each load measured from the left of the bridge :

TRUCK TYPE : Regular
Truck No. 1 - center line at: 22.48 - 3 axle on bearing line No. 1
Truck No. 2 - center line at: 12.48 - 3 axle on bearing line No. 1
Multi lane reduction factor used : 1.0000

Maximum effects in members :

Member 4	node 5	Mz = 3501.8052
Member 3	node 5	Fy = 306.1688
Member 3	node 5	Mz = -3501.8052
Member 3	node 4	Fy = -306.1688

Loadcase ID: BR1 Name:

Multiplier = 1.000

Cap loads

Type	Dir	Arm ft	Mag1	x1/L	Mag2	x2/L
Moment	X		-780.00 k-ft	0.50		

Bearing loads

Line #	Bearing #	Dir	Load kips
1	1	Z	-9.75
1	2	Z	-9.75
1	3	Z	-9.75
1	4	Z	-9.75
1	5	Z	-9.75

Auto generation details:

Selected Live Load for BR generation

Load: Design Truck
Load: Design Truck + Lane Load
Load: Design Tandem + Lane Load
Load: Two Design Trucks + Lane Load
Load: Two Design Tandem + Lane Load
Number of loaded lanes = 6
Contributing longitudinal length = 148.35 ft

Loadcase ID: BR2 Name:

Multiplier = 1.000

Cap loads

Type	Dir	Arm ft	Mag1	x1/L	Mag2	x2/L
Moment	X		-510.00 k-ft	0.50		

Bearing loads

Line #	Bearing #	Dir	Load kips
1	1	Z	-6.38
1	2	Z	-6.38
1	3	Z	-6.38
1	4	Z	-6.38
1	5	Z	-6.38

Auto generation details:

Selected Live Load for BR generation

Load: Design Truck
Load: Design Truck + Lane Load
Load: Design Tandem + Lane Load
Load: Two Design Trucks + Lane Load
Load: Two Design Tandem + Lane Load
Number of loaded lanes = 3
Contributing longitudinal length = 148.35 ft

Loadcase ID: BR3 Name:

Multiplier = 1.000

Cap loads

Type	Dir	Arm ft	Mag1	x1/L	Mag2	x2/L
Moment	X		-510.00 k-ft	0.50		

Bearing loads

Line #	Bearing #	Dir	Load kips
1	1	Z	-6.38
1	2	Z	-6.38
1	3	Z	-6.38
1	4	Z	-6.38
1	5	Z	-6.38

Auto generation details:

Selected Live Load for BR generation

Load: Design Truck
Load: Design Truck + Lane Load
Load: Design Tandem + Lane Load
Load: Two Design Trucks + Lane Load
Load: Two Design Tandem + Lane Load
Number of loaded lanes = 3
Contributing longitudinal length = 148.35 ft

Loadcase ID: BR4 Name:

Multiplier = 1.000

Cap loads

Type	Dir	Arm ft	Mag1	x1/L	Mag2	x2/L
Moment	X		-400.00 k-ft	0.50		

Bearing loads

Line #	Bearing #	Dir	Load kips
1	1	Z	-5.00
1	2	Z	-5.00
1	3	Z	-5.00
1	4	Z	-5.00
1	5	Z	-5.00

Auto generation details:

Selected Live Load for BR generation

Load: Design Truck
Load: Design Truck + Lane Load
Load: Design Tandem + Lane Load
Load: Two Design Trucks + Lane Load
Load: Two Design Tandem + Lane Load
Number of loaded lanes = 2
Contributing longitudinal length = 148.35 ft

Loadcase ID: BR5 Name:

Multiplier = 1.000

Cap loads

Type	Dir	Arm ft	Mag1	x1/L	Mag2	x2/L
Moment	X		-400.00 k-ft	0.50		

Bearing loads

Line #	Bearing #	Dir	Load kips
1	1	Z	-5.00
1	2	Z	-5.00
1	3	Z	-5.00
1	4	Z	-5.00
1	5	Z	-5.00

Auto generation details:

Selected Live Load for BR generation

Load: Design Truck
Load: Design Truck + Lane Load
Load: Design Tandem + Lane Load
Load: Two Design Trucks + Lane Load
Load: Two Design Tandem + Lane Load
Number of loaded lanes = 2
Contributing longitudinal length = 148.35 ft

Loadcase ID: WS1 Name:

Multiplier = 1.000

Loadcase ID: WS2 Name: STR V & SER I-Angle: 0

Multiplier = 1.000

Cap loads

Type	Dir	Arm ft	Mag1	x1/L	Mag2	x2/L
Force	X	0.00	-2.36 kips	0.50		

Column loads

Col #	Type	Dir	Mag1	y1/L	Mag2	y2/L
1	UDL	X	-0.157 klf	0.00		0.71

Bearing loads

Line #	Bearing #	Dir	Load kips
1	1	X	-5.05
1	1	Y	-2.77
1	1	Z	-0.00
1	2	X	-5.05
1	2	Y	-0.00
1	2	Z	-0.00
1	3	X	-5.05
1	3	Y	-0.00
1	3	Z	-0.00
1	4	X	-5.05
1	4	Y	-0.00
1	4	Z	-0.00
1	5	X	-5.05
1	5	Y	2.77
1	5	Z	-0.00

Auto generation details:

Generated Wind Load on Structure

Angle of wind = 0.00 deg Elevation above which wind load acts = 60.00 ft Modified design wind pressure, Pz: For STR V and SER I Pz,sup 12.780 psf Pz,sub 15.700 psf	For STR III and SER IV Pz,sup 58.700 psf Pz,sub 72.070 psf Overturning not considered

Loadcase ID: WS3 Name: STR III-Angle: 0

Multiplier = 1.000

Cap loads

Type	Dir	Arm ft	Mag1	x1/L	Mag2	x2/L
Force	X	0.00	-10.81 kips	0.50		

Column loads

Col #	Type	Dir	Mag1	y1/L	Mag2	y2/L
1	UDL	X	-0.721 klf	0.00		0.71

Bearing loads

Line #	Bearing #	Dir	Load kips
1	1	X	-23.20
1	1	Y	-12.72
1	1	Z	-0.00
1	2	X	-23.20
1	2	Y	-0.00
1	2	Z	-0.00
1	3	X	-23.20
1	3	Y	-0.00
1	3	Z	-0.00
1	4	X	-23.20
1	4	Y	-0.00
1	4	Z	-0.00
1	5	X	-23.20
1	5	Y	12.72
1	5	Z	-0.00

Auto generation details:

Generated Wind Load on Structure

Angle of wind = 0.00 deg Elevation above which wind load acts = 60.00 ft Modified design wind pressure, Pz: For STR V and SER I Pz,sup 12.780 psf Pz,sub 15.700 psf	For STR III and SER IV Pz,sup 58.700 psf Pz,sub 72.070 psf Overturning not considered

Loadcase ID: WS4 Name: SER IV-Angle: 0

Multiplier = 1.000

Cap loads

Type	Dir	Arm ft	Mag1	x1/L	Mag2	x2/L
Force	X	0.00	-10.81 kips	0.50		

Column loads

Col #	Type	Dir	Mag1	y1/L	Mag2	y2/L
1	UDL	X	-0.157 klf	0.00		0.71

Bearing loads

Line #	Bearing #	Dir	Load kips
1	1	X	-23.20
1	1	Y	-12.72
1	1	Z	-0.00
1	2	X	-23.20
1	2	Y	-0.00
1	2	Z	-0.00
1	3	X	-23.20
1	3	Y	-0.00
1	3	Z	-0.00
1	4	X	-23.20
1	4	Y	-0.00
1	4	Z	-0.00
1	5	X	-23.20
1	5	Y	12.72
1	5	Z	-0.00

Auto generation details:

Generated Wind Load on Structure

Angle of wind = 0.00 deg Elevation above which wind load acts = 60.00 ft Modified design wind pressure, Pz: For STR V and SER I Pz,sup 12.780 psf Pz,sub 15.700 psf	For STR III and SER IV Pz,sup 58.700 psf Pz,sub 72.070 psf Overturning not considered

Loadcase ID: WL1 Name: Angle: 0

Multiplier = 1.000

Bearing loads

Line #	Bearing #	Dir	Load kips
1	1	X	-2.97
1	1	Y	-3.91
1	1	Z	-0.00
1	2	X	-2.97
1	2	Y	-0.00
1	2	Z	-0.00
1	3	X	-2.97
1	3	Y	-0.00
1	3	Z	-0.00
1	4	X	-2.97
1	4	Y	-0.00
1	4	Z	-0.00
1	5	X	-2.97
1	5	Y	3.91
1	5	Z	-0.00

Auto generation details:

Generated Wind Load on Live Load

Angle of wind = 0.00 deg Live load length = 148.35 ft

Selected load groups

STRENGTH GROUP I
STRENGTH GROUP II
FDOT STRENGTH GROUP III
FDOT STRENGTH GROUP V
FDOT SERVICE GROUP I
FDOT SERVICE GROUP IV
FATIGUE I

FOOTING DESIGN

ISOLATED FOOTING DESIGN

Code: AASHTO LRFD 8
Units: US
Pier View: Upstation.

GEOMETRY

Name : f1
Shape : Rectangular, Type : Pile/Shaft Cap
Bf(X) = 42.50 ft, Hf(Z) = 26.50 ft, Thickness(Y) = 72.00 in
Ag = 1126.25 ft^2, Ix = 3189.38 ft^2, Iz = 7358.34 ft^2
Footing eccentric: Start at X = -21.25 ft from centerline of column.
Footing eccentric: Start at Z = 13.25 ft from centerline of column.
Columns located on the footing:
Column No. 1 at x = 0.00 ft, Rectangular 192.00 in x 120.00 in
Piles: Round Size: W = 20.00 in
Service Capacity: 300.00 kips
Factored Capacity: 300.00 kips
Lateral Resistance: 0.00 kips
Piles Section Properties: Area = 2.18 ft^2 Ix = 7853.98 in^4 Iz = 7853.98 in^4

DESIGN PARAMETERS

f'c = 4000.00 psi	fy = 60000.00 psi
phi tens = 0.90	
phi comp = 0.75	phi shear = 0.90
Tens above = 0.005	Comp below = 0.002
Ec = 4266.2 ksi	Es = 29000.0 ksi
Crack check as per current LRFD	
Crack control Exposure = 1.00	
Concrete Type : Normal Weight.	

Reinforcement Schedule

Dir	Quantity	Size	Bar dist. in	As total in^2	Spacing in	Hook
X	134	US#8[M25]	15.50	105.86	2.34	None
X	21	US#8[M25]	68.50	16.59	15.55	None
Z	99	US#8[M25]	16.50	78.21	5.13	None
Z	33	US#8[M25]	67.50	26.07	15.72	None

Pile Reactions, Service Load Effect @ Footing Bot.

Pile	X in	Z in	Batter X degree	Batter Z degree	comb	Ovs	P kips	Mxx kft	Mzz kft	Pile Reac. kips
1	25.50	-135.0	-0	-0	387	1.000	-9170.63	-2071.88	12987.75	209.84
					458	1.000	-9170.63	2071.88	-12987.75	129.81
2	79.50	-135.0	-0	-0	387	1.000	-9170.63	-2071.88	12987.75	201.95
					458	1.000	-9170.63	2071.88	-12987.75	137.71
3	133.50	-135.0	-0	-0	387	1.000	-9170.63	-2071.88	12987.75	194.05
					458	1.000	-9170.63	2071.88	-12987.75	145.60
4	187.50	-135.0	-0	-0	386	1.000	-9421.24	-3168.75	3515.58	188.01
					459	1.000	-9068.54	1625.00	-12595.91	153.44
5	241.50	-135.0	-0	-0	386	1.000	-9421.24	-3168.75	3515.58	185.94
					464	1.000	-8697.28	0.00	-4220.44	160.69
6	295.50	-135.0	-0	-0	446	1.000	-9421.24	-3168.75	-1613.52	186.56
					400	1.000	-9068.54	1625.00	12595.91	155.56
7	349.50	-135.0	-0	-0	448	1.000	-9170.63	-2071.88	-12987.75	192.00
					397	1.000	-9170.63	2071.88	12987.75	147.66
8	403.50	-135.0	-0	-0	448	1.000	-9170.63	-2071.88	-12987.75	200.00
					397	1.000	-9170.63	2071.88	12987.75	139.65
9	457.50	-135.0	-0	-0	448	1.000	-9170.63	-2071.88	-12987.75	208.00
					397	1.000	-9170.63	2071.88	12987.75	131.65
10	52.50	-81.0	-0	-0	387	1.000	-9170.63	-2071.88	12987.75	203.31
					459	1.000	-9068.54	1625.00	-12595.91	136.24
11	106.50	-81.0	-0	-0	387	1.000	-9170.63	-2071.88	12987.75	195.41
					459	1.000	-9068.54	1625.00	-12595.91	143.91
12	160.50	-81.0	-0	-0	387	1.000	-9170.63	-2071.88	12987.75	187.52
					459	1.000	-9068.54	1625.00	-12595.91	151.57
13	214.50	-81.0	-0	-0	386	1.000	-9421.24	-3168.75	3515.58	182.59
					459	1.000	-9068.54	1625.00	-12595.91	159.24
14	268.50	-81.0	-0	-0	446	1.000	-9421.24	-3168.75	-1613.52	181.51
					462	1.000	-8697.28	0.00	4220.44	160.25
15	322.50	-81.0	-0	-0	448	1.000	-9170.63	-2071.88	-12987.75	184.73
					400	1.000	-9068.54	1625.00	12595.91	154.31
16	376.50	-81.0	-0	-0	448	1.000	-9170.63	-2071.88	-12987.75	192.73
					400	1.000	-9068.54	1625.00	12595.91	146.56
17	430.50	-81.0	-0	-0	448	1.000	-9170.63	-2071.88	-12987.75	200.74
					400	1.000	-9068.54	1625.00	12595.91	138.81
18	484.50	-81.0	-0	-0	448	1.000	-9170.63	-2071.88	-12987.75	208.74
					397	1.000	-9170.63	2071.88	12987.75	130.91
19	25.50	-27.0	-0	-0	387	1.000	-9170.63	-2071.88	12987.75	204.67
					459	1.000	-9068.54	1625.00	-12595.91	134.37
20	79.50	-27.0	-0	-0	387	1.000	-9170.63	-2071.88	12987.75	196.78
					459	1.000	-9068.54	1625.00	-12595.91	142.04
21	133.50	-27.0	-0	-0	387	1.000	-9170.63	-2071.88	12987.75	188.88
					459	1.000	-9068.54	1625.00	-12595.91	149.70
22	187.50	-27.0	-0	-0	387	1.000	-9170.63	-2071.88	12987.75	180.99
					459	1.000	-9068.54	1625.00	-12595.91	157.37
23	241.50	-27.0	-0	-0	386	1.000	-9421.24	-3168.75	3515.58	177.18
					464	1.000	-8697.28	0.00	-4220.44	160.47

Pile	X in	Z in	Batter X degree	Batter Z degree	comb	Ovs	P kips	Mxx kft	Mzz kft	Pile Reac. kips
	295.50	-27.0	-0	-0	446	1.000	-9421.24	-3168.75	-1613.52	177.53
					462	1.000	-8697.28	0.00	4220.44	159.07
25	349.50	-27.0	-0	-0	448	1.000	-9170.63	-2071.88	-12987.75	185.47
					400	1.000	-9068.54	1625.00	12595.91	153.06
26	403.50	-27.0	-0	-0	448	1.000	-9170.63	-2071.88	-12987.75	193.47
					400	1.000	-9068.54	1625.00	12595.91	145.31
27	457.50	-27.0	-0	-0	448	1.000	-9170.63	-2071.88	-12987.75	201.47
					400	1.000	-9068.54	1625.00	12595.91	137.55
28	52.50	27.0	-0	-0	397	1.000	-9170.63	2071.88	12987.75	201.47
					449	1.000	-9068.54	-1625.00	-12595.91	137.55
29	106.50	27.0	-0	-0	397	1.000	-9170.63	2071.88	12987.75	193.47
					449	1.000	-9068.54	-1625.00	-12595.91	145.31
30	160.50	27.0	-0	-0	397	1.000	-9170.63	2071.88	12987.75	185.47
					449	1.000	-9068.54	-1625.00	-12595.91	153.06
31	214.50	27.0	-0	-0	396	1.000	-9421.24	3168.75	3515.58	178.43
					464	1.000	-8697.28	0.00	-4220.44	159.07
32	268.50	27.0	-0	-0	456	1.000	-9421.24	3168.75	-1613.52	176.91
					462	1.000	-8697.28	0.00	4220.44	160.47
33	322.50	27.0	-0	-0	458	1.000	-9170.63	2071.88	-12987.75	180.99
					390	1.000	-9068.54	-1625.00	12595.91	157.37
34	376.50	27.0	-0	-0	458	1.000	-9170.63	2071.88	-12987.75	188.88
					390	1.000	-9068.54	-1625.00	12595.91	149.70
35	430.50	27.0	-0	-0	458	1.000	-9170.63	2071.88	-12987.75	196.78
					390	1.000	-9068.54	-1625.00	12595.91	142.04
36	484.50	27.0	-0	-0	458	1.000	-9170.63	2071.88	-12987.75	204.67
					390	1.000	-9068.54	-1625.00	12595.91	134.37
37	25.50	81.0	-0	-0	397	1.000	-9170.63	2071.88	12987.75	208.74
					448	1.000	-9170.63	-2071.88	-12987.75	130.91
38	79.50	81.0	-0	-0	397	1.000	-9170.63	2071.88	12987.75	200.74
					449	1.000	-9068.54	-1625.00	-12595.91	138.81
39	133.50	81.0	-0	-0	397	1.000	-9170.63	2071.88	12987.75	192.73
					449	1.000	-9068.54	-1625.00	-12595.91	146.56
40	187.50	81.0	-0	-0	397	1.000	-9170.63	2071.88	12987.75	184.73
					449	1.000	-9068.54	-1625.00	-12595.91	154.31
41	241.50	81.0	-0	-0	396	1.000	-9421.24	3168.75	3515.58	181.88
					464	1.000	-8697.28	0.00	-4220.44	160.25
42	295.50	81.0	-0	-0	456	1.000	-9421.24	3168.75	-1613.52	181.79
					390	1.000	-9068.54	-1625.00	12595.91	159.24
43	349.50	81.0	-0	-0	458	1.000	-9170.63	2071.88	-12987.75	187.52
					390	1.000	-9068.54	-1625.00	12595.91	151.57
44	403.50	81.0	-0	-0	458	1.000	-9170.63	2071.88	-12987.75	195.41
					390	1.000	-9068.54	-1625.00	12595.91	143.91
45	457.50	81.0	-0	-0	458	1.000	-9170.63	2071.88	-12987.75	203.31
					390	1.000	-9068.54	-1625.00	12595.91	136.24
46	52.50	135.0	-0	-0	397	1.000	-9170.63	2071.88	12987.75	208.00
					448	1.000	-9170.63	-2071.88	-12987.75	131.65
47	106.50	135.0	-0	-0	397	1.000	-9170.63	2071.88	12987.75	200.00

Pile	X in	Z in	Batter X degree	Batter Z degree	comb	Ovs	P kips	Mxx kft	Mzz kft	Pile Reac. kips
					448	1.000	-9170.63	-2071.88	-12987.75	139.65
48	160.50	135.0	-0	-0	397	1.000	-9170.63	2071.88	12987.75	192.00
					448	1.000	-9170.63	-2071.88	-12987.75	147.66
49	214.50	135.0	-0	-0	396	1.000	-9421.24	3168.75	3515.58	187.56
					449	1.000	-9068.54	-1625.00	-12595.91	155.56
50	268.50	135.0	-0	-0	456	1.000	-9421.24	3168.75	-1613.52	185.77
					462	1.000	-8697.28	0.00	4220.44	160.69
51	322.50	135.0	-0	-0	456	1.000	-9421.24	3168.75	-1613.52	186.68
					390	1.000	-9068.54	-1625.00	12595.91	153.44
52	376.50	135.0	-0	-0	458	1.000	-9170.63	2071.88	-12987.75	194.05
					387	1.000	-9170.63	-2071.88	12987.75	145.60
53	430.50	135.0	-0	-0	458	1.000	-9170.63	2071.88	-12987.75	201.95
					387	1.000	-9170.63	-2071.88	12987.75	137.71
54	484.50	135.0	-0	-0	458	1.000	-9170.63	2071.88	-12987.75	209.84
					387	1.000	-9170.63	-2071.88	12987.75	129.81

Pile Reactions, Factored **Load Effect @ Footing Bot.**

Pile	X in	Z in	Batter X degree	Batter Z degree	comb	Ovs	P kips	Mxx kft	Mzz kft	Pile Reac. kips
1	25.5	-135.0	-0	-0	2	---	-11715.47	-3625.78	18240.59	275.60
					38	---	-8640.42	3625.78	-18240.59	101.36
2	79.5	-135.0	-0	-0	2	---	-11715.47	-3625.78	18240.59	264.53
					38	---	-8640.42	3625.78	-18240.59	112.43
3	133.5	-135.0	-0	-0	2	---	-11715.47	-3625.78	18240.59	253.46
					38	---	-8640.42	3625.78	-18240.59	123.50
4	187.5	-135.0	-0	-0	1	---	-12154.03	-5545.31	1664.30	245.63
					39	---	-8461.75	2843.75	-17554.88	134.47
5	241.5	-135.0	-0	-0	1	---	-12154.03	-5545.31	1664.30	244.76
					60	---	-7812.05	0.00	-10289.63	143.77
6	295.5	-135.0	-0	-0	1	---	-12154.03	-5545.31	1664.30	243.89
					40	---	-8461.75	2843.75	17554.88	137.39
7	349.5	-135.0	-0	-0	3	---	-11715.47	-3625.78	-18240.59	250.65
					37	---	-8640.42	3625.78	18240.59	126.31
8	403.5	-135.0	-0	-0	3	---	-11715.47	-3625.78	-18240.59	261.91
					37	---	-8640.42	3625.78	18240.59	115.05
9	457.5	-135.0	-0	-0	3	---	-11715.47	-3625.78	-18240.59	273.17
					37	---	-8640.42	3625.78	18240.59	103.79
10	52.5	-81.0	-0	-0	2	---	-11715.47	-3625.78	18240.59	265.42
					39	---	-8461.75	2843.75	-17554.88	111.36
11	106.5	-81.0	-0	-0	2	---	-11715.47	-3625.78	18240.59	254.35
					39	---	-8461.75	2843.75	-17554.88	122.02
12	160.5	-81.0	-0	-0	2	---	-11715.47	-3625.78	18240.59	243.29
					379	---	-8313.25	2193.75	-16586.97	132.29
13	214.5	-81.0	-0	-0	1	---	-12154.03	-5545.31	1664.30	237.41
					60	---	-7812.05	0.00	-10289.63	140.35
14	268.5	-81.0	-0	-0	1	---	-12154.03	-5545.31	1664.30	236.54
					58	---	-7812.05	0.00	10289.63	142.69
15	322.5	-81.0	-0	-0	3	---	-11715.47	-3625.78	-18240.59	239.42
					320	---	-8313.25	2193.75	16586.97	135.89
16	376.5	-81.0	-0	-0	3	---	-11715.47	-3625.78	-18240.59	250.68
					40	---	-8461.75	2843.75	17554.88	125.64
17	430.5	-81.0	-0	-0	3	---	-11715.47	-3625.78	-18240.59	261.94
					40	---	-8461.75	2843.75	17554.88	114.82
18	484.5	-81.0	-0	-0	3	---	-11715.47	-3625.78	-18240.59	273.20
					37	---	-8640.42	3625.78	18240.59	103.76
19	25.5	-27.0	-0	-0	2	---	-11715.47	-3625.78	18240.59	266.32
					39	---	-8461.75	2843.75	-17554.88	109.58
20	79.5	-27.0	-0	-0	2	---	-11715.47	-3625.78	18240.59	255.25
					379	---	-8313.25	2193.75	-16586.97	119.81
21	133.5	-27.0	-0	-0	2	---	-11715.47	-3625.78	18240.59	244.18
					379	---	-8313.25	2193.75	-16586.97	129.91
22	187.5	-27.0	-0	-0	2	---	-11715.47	-3625.78	18240.59	233.11
					60	---	-7812.05	0.00	-10289.63	136.93
23	241.5	-27.0	-0	-0	1	---	-12154.03	-5545.31	1664.30	229.19
					60	---	-7812.05	0.00	-10289.63	143.23

Pile	X in	Z in	Batter X degree	Batter Z degree	comb	Ovs	P kips	Mxx kft	Mzz kft	Pile Reac. kips
	295.5	-27.0	-0	-0	1	---	-12154.03	-5545.31	1664.30	228.31
					58	---	-7812.05	0.00	10289.63	139.81
25	349.5	-27.0	-0	-0	3	---	-11715.47	-3625.78	-18240.59	239.46
					58	---	-7812.05	0.00	10289.63	133.51
26	403.5	-27.0	-0	-0	3	---	-11715.47	-3625.78	-18240.59	250.71
					320	---	-8313.25	2193.75	16586.97	124.11
27	457.5	-27.0	-0	-0	3	---	-11715.47	-3625.78	-18240.59	261.97
					40	---	-8461.75	2843.75	17554.88	113.89
28	52.5	27.0	-0	-0	7	---	-11715.47	3625.78	18240.59	261.97
					34	---	-8461.75	-2843.75	-17554.88	113.89
29	106.5	27.0	-0	-0	7	---	-11715.47	3625.78	18240.59	250.71
					369	---	-8313.25	-2193.75	-16586.97	124.11
30	160.5	27.0	-0	-0	7	---	-11715.47	3625.78	18240.59	239.46
					60	---	-7812.05	0.00	-10289.63	133.51
31	214.5	27.0	-0	-0	6	---	-12154.03	5545.31	1664.30	229.88
					60	---	-7812.05	0.00	-10289.63	139.81
32	268.5	27.0	-0	-0	6	---	-12154.03	5545.31	1664.30	228.72
					58	---	-7812.05	0.00	10289.63	143.23
33	322.5	27.0	-0	-0	8	---	-11715.47	3625.78	-18240.59	233.11
					58	---	-7812.05	0.00	10289.63	136.93
34	376.5	27.0	-0	-0	8	---	-11715.47	3625.78	-18240.59	244.18
					310	---	-8313.25	-2193.75	16586.97	129.91
35	430.5	27.0	-0	-0	8	---	-11715.47	3625.78	-18240.59	255.25
					310	---	-8313.25	-2193.75	16586.97	119.81
36	484.5	27.0	-0	-0	8	---	-11715.47	3625.78	-18240.59	266.32
					35	---	-8461.75	-2843.75	17554.88	109.58
37	25.5	81.0	-0	-0	7	---	-11715.47	3625.78	18240.59	273.20
					33	---	-8640.42	-3625.78	-18240.59	103.76
38	79.5	81.0	-0	-0	7	---	-11715.47	3625.78	18240.59	261.94
					34	---	-8461.75	-2843.75	-17554.88	114.82
39	133.5	81.0	-0	-0	7	---	-11715.47	3625.78	18240.59	250.68
					34	---	-8461.75	-2843.75	-17554.88	125.64
40	187.5	81.0	-0	-0	7	---	-11715.47	3625.78	18240.59	239.42
					369	---	-8313.25	-2193.75	-16586.97	135.89
41	241.5	81.0	-0	-0	6	---	-12154.03	5545.31	1664.30	237.18
					60	---	-7812.05	0.00	-10289.63	142.69
42	295.5	81.0	-0	-0	6	---	-12154.03	5545.31	1664.30	236.01
					58	---	-7812.05	0.00	10289.63	140.35
43	349.5	81.0	-0	-0	8	---	-11715.47	3625.78	-18240.59	243.29
					310	---	-8313.25	-2193.75	16586.97	132.29
44	403.5	81.0	-0	-0	8	---	-11715.47	3625.78	-18240.59	254.35
					35	---	-8461.75	-2843.75	17554.88	122.02
45	457.5	81.0	-0	-0	8	---	-11715.47	3625.78	-18240.59	265.42
					35	---	-8461.75	-2843.75	17554.88	111.36
46	52.5	135.0	-0	-0	7	---	-11715.47	3625.78	18240.59	273.17
					33	---	-8640.42	-3625.78	-18240.59	103.79
47	106.5	135.0	-0	-0	7	---	-11715.47	3625.78	18240.59	261.91

Pile	X in	Z in	Batter X degree	Batter Z degree	comb	Ovs	P kips	Mxx kft	Mzz kft	Pile Reac. kips
					33	---	-8640.42	-3625.78	-18240.59	115.05
48	160.5	135.0	-0	-0	7	---	-11715.47	3625.78	18240.59	250.65
					33	---	-8640.42	-3625.78	-18240.59	126.31
49	214.5	135.0	-0	-0	6	---	-12154.03	5545.31	1664.30	245.63
					34	---	-8461.75	-2843.75	-17554.88	137.39
50	268.5	135.0	-0	-0	6	---	-12154.03	5545.31	1664.30	244.47
					58	---	-7812.05	0.00	10289.63	143.77
51	322.5	135.0	-0	-0	6	---	-12154.03	5545.31	1664.30	243.30
					35	---	-8461.75	-2843.75	17554.88	134.47
52	376.5	135.0	-0	-0	8	---	-11715.47	3625.78	-18240.59	253.46
					32	---	-8640.42	-3625.78	18240.59	123.50
53	430.5	135.0	-0	-0	8	---	-11715.47	3625.78	-18240.59	264.53
					32	---	-8640.42	-3625.78	18240.59	112.43
54	484.5	135.0	-0	-0	8	---	-11715.47	3625.78	-18240.59	275.60
					32	---	-8640.42	-3625.78	18240.59	101.36

Pile Reactions: Notes

Load effects on pile are calculated at centroid of the bottom of the footing.
Both the max. and min. pile reaction are reported for each individual pile.
Positive pile reaction represents pile subject to compression load; negative pile reaction represents pile subject to uplift.
Coordinate system of pile layout see Geometry Tab>Footing Pile>Edit Pile.

Pile Lateral Resistance Check X

Controlling load combination number	58
Lateral loads on all piles(kips)	205.794
Batter angle(deg)	0.000
Available lateral resistance due to batter(kips)	0.000
Direct shear resistance of all piles(kips)	0.000
Total pile lateral resistance(kips)	0.000
Is the lateral resistance due to batter greater than lateral load on all piles?	NO
Is the total pile lateral resistance greater than the lateral load on all piles?	NO

Pile Lateral Resistance Check Z

Controlling load combination number	31
Lateral loads on all piles(kips)	85.313
Batter angle(deg)	0.000
Available lateral resistance due to batter(kips)	0.000
Direct shear resistance of all piles(kips)	0.000
Total pile lateral resistance(kips)	0.000
Is the lateral resistance due to batter greater than lateral load on all piles?	NO
Is the total pile lateral resistance greater than the lateral load on all piles?	NO

Max. Pile Reaction Used in Design:

Factored pile reaction	275.60 kips	Comb 2
Service pile reaction	209.84 kips	Comb 387

Flexure

Dir	Loc ft	d in	Mmax kft	Comb	CL	Asb_req in^2	Asb_prv in^2	Asb_eff in^2	Ast_req in^2	Ast_prv in^2	Ast_eff in^2
X	-8.00	56.50	25503.4	2	T	105.81	105.86**	105.86**	15.90	16.59	16.59
X	8.00	56.50	25503.4	2	T	105.81	105.86**	105.86**	15.90	16.59	16.59
Z	-5.00	55.50	18671.6	2	T	77.53	78.21	78.21	25.50	26.07	26.07
Z	5.00	55.50	18671.6	2	T	77.53	78.21	78.21	25.50	26.07	26.07

Flexure Note

CL: Section classification as per LRFD 2006 interims for provided reinforcement.
C = Compression controlled, I = In-Transition, T = Tension controlled.
Required reinforcement is based on phi for tension controlled sections..
** Required spacing of bars violated.

NOTE: PRELIMINARY CALCULATIONS ARE TO DETERMINE PILE LOADS. VALUES IN RED WILL BE ADDRESSED IN FINAL PIER DESIGN.

Crack control and fatigue check

Cracking/Fatigue

Dir	Loc ft	d in	Service Mmax kft	Service Comb	Service fs ksi	Service Srq in	Service Spr in	Fatigue fs ksi	Fatigue FTH ksi
X	-8.00	56.50	18759.4	387	40.84**	13.5	2.3	0.00	0.00
X	8.00	56.50	18759.4	387	40.84**	13.5	2.3	0.00	0.00
Z	-5.00	55.50	13806.9	387	40.54**	13.5	5.1	0.00	0.00
Z	5.00	55.50	13806.9	387	40.54**	13.5	5.1	0.00	0.00

Cracking/Fatigue Note

** Stress (fs) is higher than steel yield strength (0.6*fy).

One Way Shear (Beta-Theta Method)

Col	Dir	Dist ft	Comb	dv in	Vu kips	Mu kft	theta deg	beta	phi*Vc kips
1	X	-12.46	2	53.56	2655.6	21184.9	37.44	1.71	1657.1 *
	X	12.46	2	53.6	2655.6	21184.9	37.44	1.71	1657.1 *
	Z	-9.56	2	54.67	2353.2	15267.5	37.80	1.66	2639.1
	Z	9.56	2	54.67	2353.2	15267.5	37.80	1.66	2639.1

NOTE: PRELIMINARY CALCULATIONS ARE TO DETERMINE PILE LOADS. VALUES IN RED WILL BE ADDRESSED IN FINAL PIER DESIGN.

One Way Shear Note

* Shear resistance is less than applied shear force. You may increase the footing depth or provide stirrups.

Two Way Shear

#	Bo ft	Ao ft^2	Comb	Avg. dv in	Vu kips	phi*Vc kips
Columns 1	70.04	297.58	2	54.11	9370.4	10315.1
Piles - max 10	19.40	29.96	2	54.11	275.6	2857.7
Piles - min 1	8.98	24.48	2	54.11	275.6	1321.9

Two Way Shear Note

TWO WAY SHEAR IN FOOTING IS NOT DESIGNED AND STIRRUPS ARE NOT CONSIDERED.

Bridge Cost Backup

Bridge Unit Cost (Foundation to barriers) - I-Girder Alternative

	(85% Concrete & 15% Steel Girders)	Assumed premimums Phase (20%)	PT caps (5%)	Specialty Equipment Factor (2%)	Total
Girder Option	$141	$28.2	$7.05	$2.82	$179.07

Approx. amount of money estimated for specialized overhead gantry equipment = $2,219,165.16 (Beam Shifter = $2M)

Bridge Unit Cost (Foundation to barriers) - Segmental Alternative

	(85% Span-by-Span & 15% Balanced Cantilever)	Assumed premimums Phase (15%)*	PT Piercaps (5%)	Specialty Equipment Factor (7%)	Total		
Segmental	$147	$22.09	$7.36	$10.31	$187.01	Approx. 5% more than Girder Alternative	**Use for cost est.**

*MOT will be easier for segmental option since eliminates deck pours and segment delivery can occur from above. Substructure is narrower than girder option so potential to maintain 1 lane in each direction at night.

Approx. amount of money estimated for specialized overhead gantry equipment & casting needs= $8,111,363.44 (Overhead Gantry = $4M, 8 Cast beds @0.5M each = 4M)

Cost comparison

Lake Bosse Bridge

	Length (FT)	Width (FT)	Thickness (IN)	Area (SF)	Volume (CY)	COST ($/SF)	COST ($/CY)	COST ($/LF)	COST	
Superstructure Demolition	700	23.00	N/A	16100	N/A	$50.00	N/A	N/A	$805,000.00	
New Construction										
Deck	700	5.33	8	N/A	92.1	N/A	$3,000.00	N/A	$276,370.37	
Traffic Railing	740	N/A	N/A	N/A	N/A	N/A	N/A	200	$148,000.00	
								Subtotal =	$1,229,370.37	
								Contingency (25%) =	$307,342.59	
								Total Cost =	$1,536,712.96	
								Cost per SF	$47.90	**Use for cost est.**

Little Wekiva

New Construction										
Traffic Railing (x2)	220	N/A	N/A	N/A	N/A	N/A	N/A	250	$55,000.00	
								Contingency (25%) =	$13,750.00	
								Total Cost =	$68,750.00	
								Cost per SF	$8.25	**Use for cost est.**

SR 434

Traffic Railing Separator Demolition	285	22	N/A	N/A	N/A	$25.00	N/A	N/A	$156,750.00	
New Construction										
Traffic Railing	285	N/A	N/A	N/A	N/A	N/A	N/A	250	$71,250.00	
								Subtotal =	$228,000.00	
								Contingency (25%) =	$57,000.00	
								Total Cost =	$285,000.00	**Use for cost est.**